chanhvinh.com

Product data sheet
Characteristics

ATV630D15N4
variable speed drive ATV630, 15kW/20HP, 380...480V, IP21/UL type 1

Green Premium™

The information provided in this documentation contains general descriptions and/or technical characteristics of the performance of the products contained herein.
This documentation is not intended as a substitute for and is not to be used for determining suitability or reliability of these products for specific user applications.
It is the duty of any such user or integrator to perform the appropriate and complete risk analysis, evaluation and testing of the products with respect to the relevant specific application or use thereof.
Neither Schneider Electric Industries SAS nor any of its affiliates or subsidiaries shall be responsible or liable for misuse of the information contained herein.



Main

Range of product	Altivar Process ATV600
Product or component type	Variable speed drive
Product specific application	Process and utilities
Device short name	ATV630
Variant	Standard version
Product destination	Synchronous motors Asynchronous motors
EMC filter	Integrated 164.04 ft (50 m) EN/IEC 61800-3 category C2 Integrated 492.13 ft (150 m) EN/IEC 61800-3 category C3
IP degree of protection	IP21IEC 61800-5-1 IP21IEC 60529
Degree of protection	UL type 1 UL 508C
Type of cooling	Forced convection
Supply frequency	50...60 Hz - 5...5 %
[Us] rated supply voltage	380...480 V - 15...10 %
Motor power kW	15 KW normal duty) 11 kW heavy duty)
Maximum Horse Power Rating	20 Hp normal duty 15 hp heavy duty
Line current	27 A at 380 V (normal duty) 23.3 A at 480 V (normal duty) 20.6 A at 380 V (heavy duty) 18.1 A at 480 V (heavy duty)
Prospective line Isc	50 kA
Apparent power	19.4 KVA at 480 V (normal duty) 15 kVA at 480 V (heavy duty)
Continuous output current	31.7 A at 4 kHz for normal duty 23.5 A at 4 kHz for heavy duty
Maximum transient current	34.9 A during 60 s (normal duty) 35.3 A during 60 s (heavy duty)
Asynchronous motor control profile	Constant torque standard Variable torque standard Optimized torque mode
Synchronous motor control profile	Permanent magnet motor Synchronous reluctance motor
Output frequency	0.0001…0.5 kHz
Speed drive output frequency	0.1…599 Hz
Nominal switching frequency	4 kHz
Switching frequency	2...12 kHz adjustable 4...12 kHz with derating factor
Safety function	STO (safe torque off) SIL 3
Discrete input logic	16 preset speeds

chanhvinh.com

Communication port protocol	Ethernet Modbus serial Modbus TCP
Option card	Slot A: communication module, Profibus DP V1 Slot A: communication module, Profinet Slot A: communication module, DeviceNet Slot A: communication module, Modbus TCP/ EtherNet/IP Slot A: communication module, CANopen daisy chain RJ45 Slot A: communication module, CANopen SUB-D 9 Slot A: communication module, CANopen screw terminals Slot A/slot B: digital and analog I/O extension module Slot A/slot B: output relay extension module Slot A: communication module, Ethernet IP/Modbus TCP/MD-Link Communication module, BACnet MS/TP Communication module, Ethernet Powerlink

Complementary

Mounting mode	Wall mount
Output voltage	<= power supply voltage
Permissible temporary current boost	1.1 x In during 60 s (normal duty) 1.5 x In during 60 s (heavy duty)
Motor slip compensation	Can be suppressed Adjustable Automatic whatever the load Not available in permanent magnet motor law
Acceleration and deceleration ramps	Linear adjustable separately from 0.01...9999 s
Braking to standstill	By DC injection
Protection type	Thermal protection motor Safe torque off motor Motor phase break motor Thermal protection drive Safe torque off drive Overheating drive Overcurrent between output phases and earth drive Overload of output voltage drive Short-circuit protection drive Motor phase break drive Overvoltages on the DC bus drive Line supply overvoltage drive Line supply undervoltage drive Line supply phase loss drive Overspeed drive Break on the control circuit drive
Frequency resolution	Display unit: 0.1 Hz Analog input: 0.012/50 Hz
Electrical connection	Control: removable screw terminals0.5...1.5 mm²/AWG 20...AWG 16 Line side: screw terminal10...16 mm²/AWG 8...AWG 6 Motor: screw terminal10...16 mm²/AWG 8...AWG 6
Connector type	RJ45 (on the remote graphic terminal) for Ethernet/Modbus TCP RJ45 (on the remote graphic terminal) for Modbus serial
Exchange mode	Half duplex, full duplex, autonegotiation Ethernet/Modbus TCP
Number of addresses	1…247 for Modbus serial
Method of access	Slave Modbus TCP
Supply	External supply for digital inputs: 24 V DC (19…30 V), <1.25 mA, protection type: overload and short-circuit protection Internal supply for reference potentiometer (1 to 10 kOhm): 10.5 V DC +/- 5 %, <10 mA, protection type: overload and short-circuit protection Internal supply for digital inputs and STO: 24 V DC (21…27 V), <200 mA, protection type: overload and short-circuit protection
Local signalling	3 LEDs for local diagnostic 3 LEDs (dual colour) for embedded communication status 4 LEDs (dual colour) for communication module status 1 LED (red) for presence of voltage
Maximum Width	8.31 in (211 mm)
Height	21.50 in (546 mm)
Depth	9.13 in (232 mm)

chanhvinh.com

Net Weight	29.98 lb(US) (13.6 kg)
Analogue input number	3
Analogue input type	AI1, AI2, AI3 software-configurable voltage: 0...10 V DC, impedance: 30 kOhm, resolution 12 bits AI1, AI2, AI3 software-configurable current: 0...20 mA/4...20 mA, impedance: 250 Ohm, resolution 12 bits
Discrete input number	8
Discrete input type	DI1...DI6 programmable, 24 V DC (<= 30 V), impedance: 3.5 kOhm DI5, DI6 programmable as pulse input: 0…30 kHz, 24 V DC (<= 30 V) STOA, STOB safe torque off, 24 V DC (<= 30 V), impedance: > 2.2 kOhm
Input compatibility	DI1...DI6: discrete input level 1 PLC conforming to EN/IEC 61131-2 DI5, DI6: discrete input level 1 PLC conforming to IEC 65A-68 STOA, STOB: discrete input level 1 PLC conforming to EN/IEC 61131-2
Discrete input logic	Positive logic (source) (DI1...DI6), < 5 V (state 0), > 11 V (state 1) Negative logic (sink) (DI1...DI6), > 16 V (state 0), < 10 V (state 1) Positive logic (source) (DI5, DI6), < 0.6 V (state 0), > 2.5 V (state 1) Positive logic (source) (STOA, STOB), < 5 V (state 0), > 11 V (state 1)
Analogue output number	2
Analogue output type	Software-configurable voltage AO1, AO2: 0...10 V DC impedance 470 Ohm, resolution 10 bits Software-configurable current AO1, AO2: 0...20 mA, resolution 10 bits
Sampling duration	2 Ms +/- 0.5 ms (DI1...DI4) - discrete input 5 Ms +/- 1 ms (DI5, DI6) - discrete input 5 Ms +/- 0.1 ms (AI1, AI2, AI3) - analog input 10 ms +/- 1 ms (AO1) - analog output
Accuracy	+/- 0.6 % AI1, AI2, AI3 for a temperature variation 60 °C analog input +/- 1 % AO1, AO2 for a temperature variation 60 °C analog output
Linearity error	AI1, AI2, AI3: +/- 0.15 % of maximum value for analog input AO1, AO2: +/- 0.2 % for analog output
Relay output number	3
Relay output type	Configurable relay logic R1: fault relay NO/NC electrical durability 100000 cycles Configurable relay logic R2: sequence relay NO electrical durability 100000 cycles Configurable relay logic R3: sequence relay NO electrical durability 100000 cycles
Refresh time	Relay output (R1, R2, R3): 5 ms (+/- 0.5 ms)
Minimum switching current	Relay output R1, R2, R3: 5 mA at 24 V DC
Maximum switching current	Relay output R1, R2, R3 on resistive load, cos phi = 1: 3 A at 250 V AC Relay output R1, R2, R3 on resistive load, cos phi = 1: 3 A at 30 V DC Relay output R1, R2, R3 on inductive load, cos phi = 0.4 and L/R = 7 ms: 2 A at 250 V AC Relay output R1, R2, R3 on inductive load, cos phi = 0.4 and L/R = 7 ms: 2 A at 30 V DC
Isolation	Between power and control terminals
Variable speed drive application selection	Building - HVAC Compressor centrifugal Food and beverage processing Other application Mining mineral and metal Fan Mining mineral and metal Pump Oil and gas Fan Water and waste water Other application Building - HVAC Screw compressor Food and beverage processing Pump Food and beverage processing Fan Food and beverage processing Atomization Oil and gas Electro submersible pump (ESP) Oil and gas Water injection pump Oil and gas Jet fuel pump Oil and gas Compressor for refinery Water and waste water Centrifuge pump Water and waste water Positive displacement pump Water and waste water Electro submersible pump (ESP) Water and waste water Screw pump Water and waste water Lobe compressor Water and waste water Screw compressor Water and waste water Compressor centrifugal Water and waste water Fan Water and waste water Conveyor Water and waste water Mixer
Motor power range AC-3	15…25 KW 380…440 V 3 phase 15…25 kW at 480…500 V 3 phases

chanhvinh.com

Environment

Insulation resistance	> 1 MOhm 500 V DC for 1 minute to earth
Noise level	59.5 dB 86/188/EEC
Power dissipation in W	Natural convection 59 W 380 V 4 kHz Forced convection 366 W 380 V 4 kHz
Volume of cooling air	56798.01 Gal/hr(US) (215 m3/h)
Operating position	Vertical +/- 10 degree
Maximum THDI	<48 % from 80...100 % of load IEC 61000-3-12
Electromagnetic compatibility	Electrostatic discharge immunity test level 3 conforming to IEC 61000-4-2 Radiated radio-frequency electromagnetic field immunity test level 3 conforming to IEC 61000-4-3 Electrical fast transient/burst immunity test level 4 conforming to IEC 61000-4-4 1.2/50 µs - 8/20 µs surge immunity test level 3 conforming to IEC 61000-4-5 Conducted radio-frequency immunity test level 3 conforming to IEC 61000-4-6
Pollution degree	2 conforming to EN/IEC 61800-5-1
Vibration resistance	1.5 mm peak to peak (f= 2…13 Hz) conforming to IEC 60068-2-6 1 gn (f= 13…200 Hz) conforming to IEC 60068-2-6
Shock resistance	15 gn 11 ms IEC 60068-2-27
Relative humidity	5…95 % without condensation conforming to IEC 60068-2-3
Ambient air temperature for operation	5…122 °F (-15…50 °C) without derating) 122…140 °F (50…60 °C) with derating factor)
Ambient air temperature for storage	-40…158 °F (-40…70 °C)
Operating altitude	<= 1000 m without derating 1000...4800 m with current derating 1 % per 100 m
Standards	UL 508C EN/IEC 61800-3 Environment 1 category C2 EN/IEC 61800-3 Environment 2 category C3 EN/IEC 61800-3 EN/IEC 61800-5-1 IEC 61000-3-12 IEC 60721-3 IEC 61508 IEC 13849-1
Product certifications	ATEX zone 2/22 TÜV ATEX INERIS CSA UL DNV-GL
Marking	CE

Ordering and shipping details

Category	22206 - ATV630 FRAMES 3 & 4
Discount Schedule	CP4E
GTIN	00785901490944
Nbr. of units in pkg.	1
Package weight(Lbs)	36.59 lb(US) (16.60 kg)
Returnability	Yes
Country of origin	IN

Packing Units

Unit Type of Package 1	PCE
Package 1 Height	10.04 in (25.5 cm)
Package 1 width	13.39 in (34 cm)
Package 1 Length	28.94 in (73.5 cm)

Offer Sustainability

Sustainable offer status	Green Premium product
California proposition 65	WARNING: This product can expose you to chemicals including: Lead and lead compounds, which is known to the State of California to cause cancer and birth defects or other reproductive harm. For more information go to www.P65Warnings.ca.gov
REACh Regulation	REACh Declaration
EU RoHS Directive	Pro-active compliance (Product out of EU RoHS legal scope) EU RoHS Declaration
Mercury free	Yes
RoHS exemption information	Yes
China RoHS Regulation	China RoHS Declaration
Environmental Disclosure	Product Environmental Profile
Circularity Profile	End Of Life Information
WEEE	The product must be disposed on European Union markets following specific waste collection and never end up in rubbish bins.
Upgradeability	Upgraded Components Available

chanhvinh.com

Product data sheet
Dimensions Drawings

ATV630D15N4

Dimensions

Drives with IP21 Top Cover

Front and Left Views

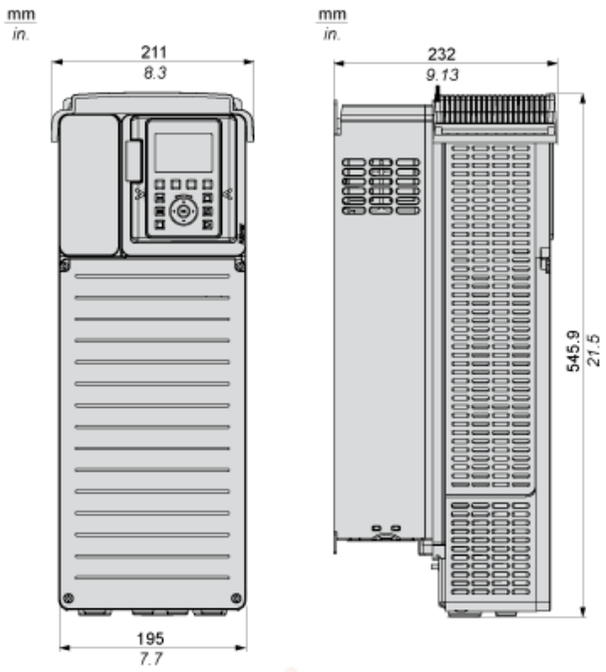

Drives Without IP21 Top Cover

Left and Rear Views

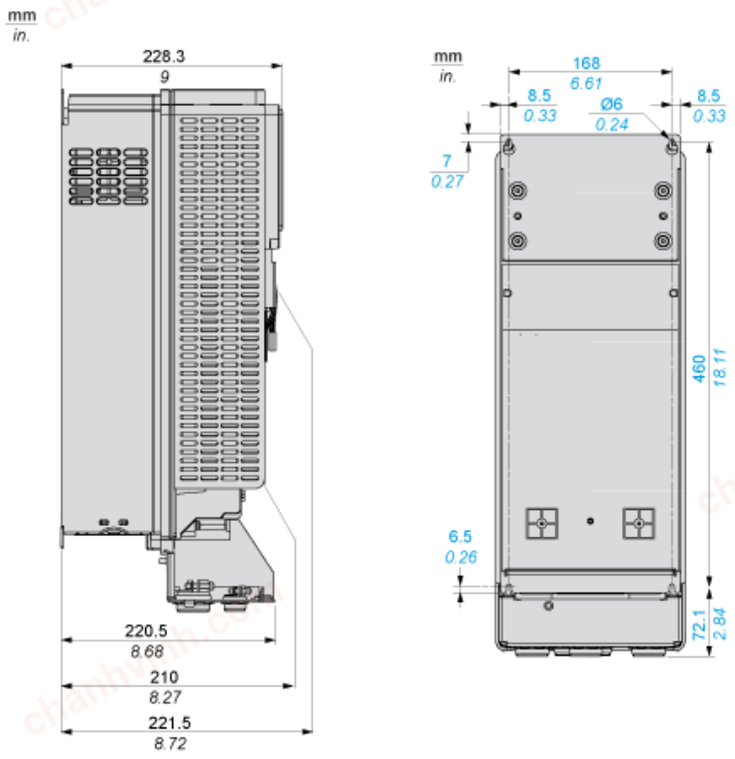

chanhvinh.com

Product data sheet
Mounting and Clearance

ATV630D15N4

Clearances

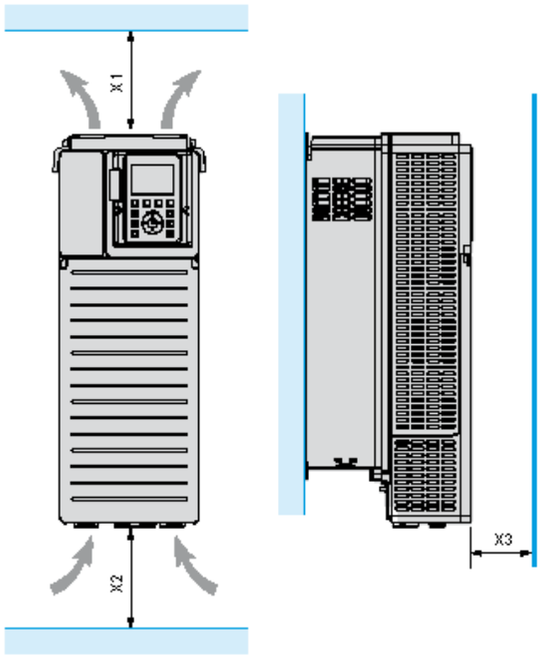

X1	X2	X3
≥ 100 mm (3.94 in.)	≥ 100 mm (3.94 in.)	≥ 10 mm (0.39 in.)

Mounting Types

Mounting Type A: Individual IP21

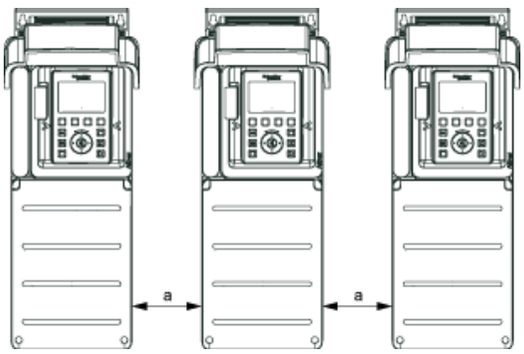

a ≥ 100 mm (3.94 in.)

Life Is On Schneider Electric

Mounting Type B: Side by Side IP20

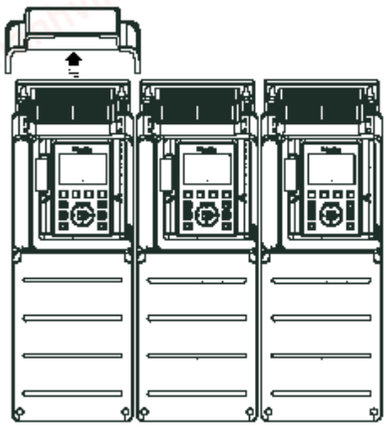

Mounting Type C: Individual IP20

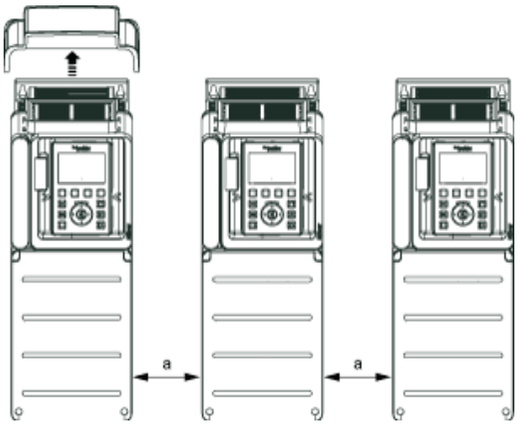

a ≥ 0

chanhvinh.com

Product data sheet
Connections and Schema

ATV630D15N4

Three-Phase Power Supply with Upstream Breaking via Line Contactor

Connection diagrams conforming to standards EN 954-1 category 1 and IEC/EN 61508 capacity SIL1, stopping category 0 in accordance with standard IEC/EN 60204-1

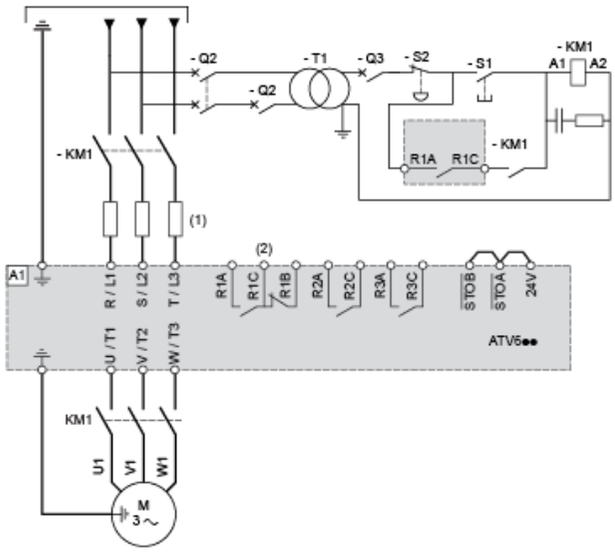

(1) Line choke if used
(2) Use relay R1 set to operating state Fault to switch Off the product once an error is detected.
A1 : Drive
KM1 : Line Contactor
Q2, Circuit breakers
Q3 :
S1, Pushbuttons
S2 :
T1 : Transformer for control part

Three-Phase Power Supply with Downstream Breaking via Contactor

Connection diagrams conforming to standards EN 954-1 category 1 and IEC/EN 61508 capacity SIL1, stopping category 0 in accordance with standard IEC/EN 60204-1

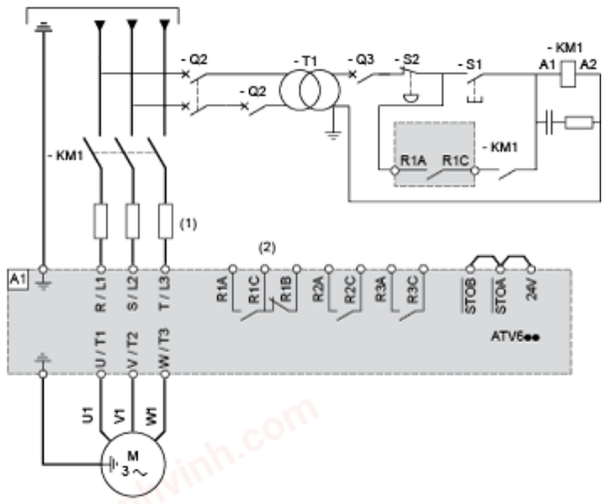

(1) Line choke if used
(2) Use relay R1 set to operating state Fault to switch Off the product once an error is detected.
A1 : Drive
KM1 : Contactor

Life Is On Schneider Electric

Control Block Wiring Diagram

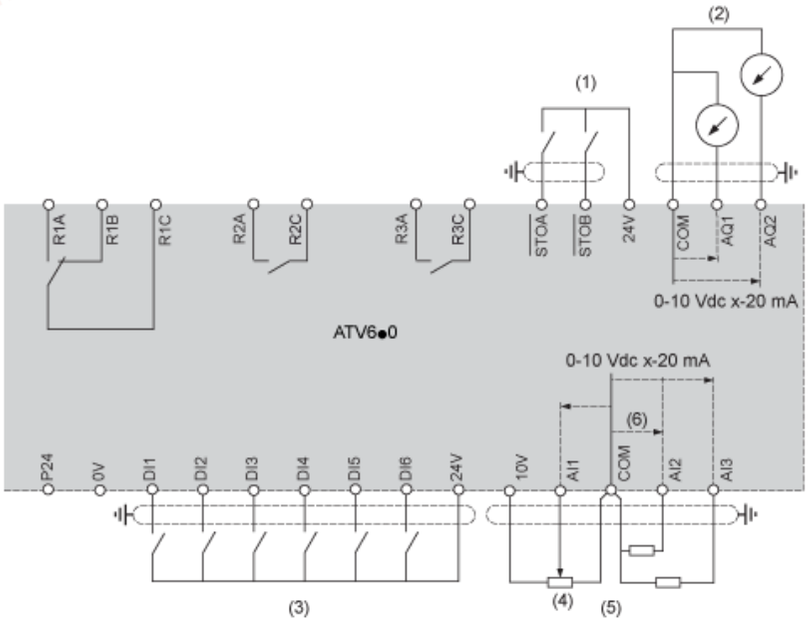

(1) Safe Torque Off
(2) Analog Output
(3) Digital Input
(4) Reference potentiometer
(5) Analog Input
R1A, Fault relay
R1B,
R1C :
R2A, Sequence relay
R2C :
R3A, Sequence relay
R3C :

Sensor Connection

It is possible to connect either 1 or 3 sensors on terminals AI2 or AI3.

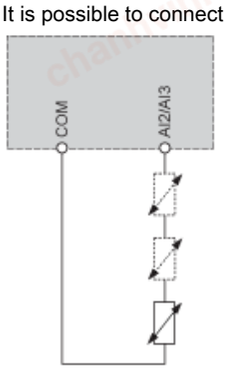

Sink / Source Switch Configuration

The switch is used to adapt the operation of the logic inputs to the technology of the programmable controller outputs.

- Set the switch to Source (factory setting) if using PLC outputs with PNP transistors.
- Set the switch to Ext if using PLC outputs with NPN transistors.

Switch Set to SRC (Source) Position Using the Output Power Supply for the Digital Inputs

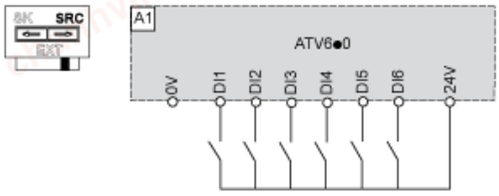

Switch Set to SRC (Source) Position and Use of an External Power Supply for the DIs

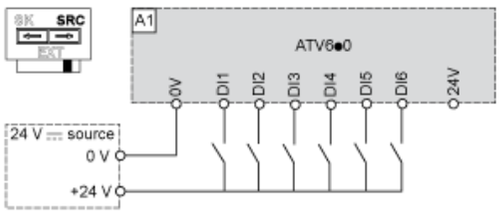

Switch Set to SK (Sink) Position Using the Output Power Supply for the Digital Inputs

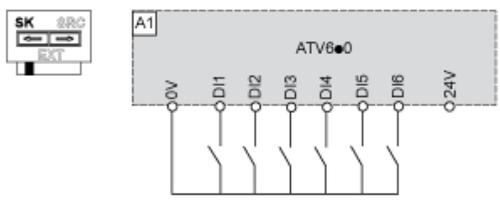

Switch Set to EXT Position Using an External Power Supply for the DIs

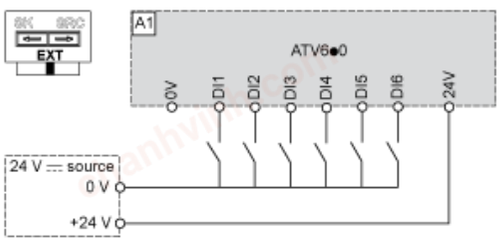

chanhvinh.com

Product data sheet
Performance Curves

ATV630D15N4

Derating Curves

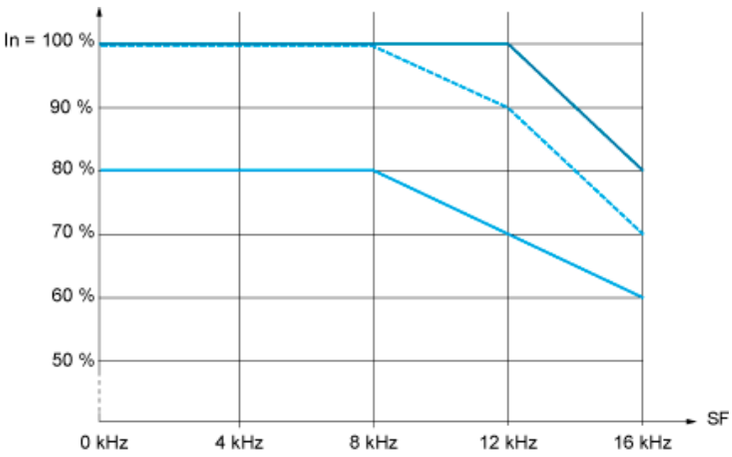

40 °C (104 °F) - Mounting type A, B and C
50 °C (122 °F) - Mounting type A, B and C
60 °C (140 °F) - Mounting type B and C
In : Nominal Drive Current
SF : Switching Frequency