chanhvinh.com

Product data sheet
Characteristics

ATV320U04N4B
variable speed drive, ATV320, 0.37 kW, 380…500 V, 3 phases, book



Main

Range of product	Altivar Machine ATV320
Product or component type	Variable speed drive
Product specific application	Complex machines
Variant	Standard version
Mounting mode	Cabinet mount
Communication port protocol	Modbus serial CANopen
Option card	Communication module, CANopen Communication module, EtherCAT Communication module, Profibus DP V1 Communication module, Profinet Communication module, Ethernet Powerlink Communication module, Ethernet/IP Communication module, DeviceNet
[Us] rated supply voltage	380...500 V - 15...10 %
Nominal output current	1.5 A
Motor power kW	0.37 kW heavy duty
EMC filter	Class C2 EMC filter integrated
IP degree of protection	IP20

Complementary

Discrete input number	7
Discrete input type	STO safe torque off, 24 V DC1.5 kOhm DI1...DI6 logic inputs, 24 V DC 30 V) DI5 programmable as pulse input 0…30 kHz, 24 V DC 30 V)
Discrete input logic	Positive logic (source) Negative logic (sink)
Discrete output number	3
Discrete output type	Open collector DQ+ 0…1 kHz 30 V DC 100 mA Open collector DQ- 0…1 kHz 30 V DC 100 mA
Analogue input number	3
Analogue input type	AI1 voltage 0...10 V DC 30 kOhm 10 bits AI2 bipolar differential voltage +/- 10 V DC 30 kOhm 10 bits AI3 current 0...20 mA (or 4-20 mA, x-20 mA, 20-x mA or other patterns by configuration) 250 Ohm 10 bits
Analogue output number	1
Analogue output type	Software-configurable current AQ1 0...20 mA 800 Ohm 10 bits Software-configurable voltage AQ1 0...10 V DC 470 Ohm 10 bits
Relay output type	Configurable relay logic R1A 1 NO 100000 cycles Configurable relay logic R1B 1 NC 100000 cycles Configurable relay logic R1C Configurable relay logic R2A 1 NO 100000 cycles Configurable relay logic R2C
Maximum switching current	Relay output R1A, R1B, R1C resistive, cos phi = 1 3 A 250 V AC Relay output R1A, R1B, R1C resistive, cos phi = 1 3 A 30 V DC Relay output R1A, R1B, R1C, R2A, R2C inductive, cos phi = 0.4 7 ms 2 A 250 V AC Relay output R1A, R1B, R1C, R2A, R2C inductive, cos phi = 0.4 7 ms 2 A 30 V DC Relay output R2A, R2C resistive, cos phi = 1 5 A 250 V AC Relay output R2A, R2C resistive, cos phi = 1 5 A 30 V DC
Minimum switching current	Relay output R1A, R1B, R1C, R2A, R2C 5 mA 24 V DC

The information provided in this documentation contains general descriptions and/or technical characteristics of the performance of the products contained herein.
This documentation is not intended as a substitute for and is not to be used for determining suitability or reliability of these products for specific user applications.
It is the duty of any such user or integrator to perform the appropriate and complete risk analysis, evaluation and testing of the products with respect to the relevant specific application or use thereof.
Neither Schneider Electric Industries SAS nor any of its affiliates or subsidiaries shall be responsible or liable for misuse of the information contained herein.

chanhvinh.com

Method of access	Slave CANopen
4 quadrant operation possible	True
Asynchronous motor control profile	Voltage/Frequency ratio, 5 points Flux vector control without sensor, standard Voltage/Frequency ratio - Energy Saving, quadratic U/f Flux vector control without sensor - Energy Saving Voltage/frequency ratio, 2 points
Synchronous motor control profile	Vector control without sensor
Maximum output frequency	0.599 kHz
Transient overtorque	170…200 % of nominal motor torque
Acceleration and deceleration ramps	Linear U S CUS Ramp switching Acceleration/Deceleration ramp adaptation Acceleration/deceleration automatic stop with DC injection
Motor slip compensation	Automatic whatever the load Adjustable 0...300 % Not available in voltage/frequency ratio (2 or 5 points)
Switching frequency	2...16 kHz adjustable 4...16 kHz with derating factor
Nominal switching frequency	4 kHz
Braking to standstill	By DC injection
Brake chopper integrated	True
Line current	2.1 A 380 V heavy duty) 1.6 A 500 V heavy duty)
Maximum Input Current per phase	2.1 A
Maximum output voltage	500 V
Apparent power	1.4 kVA 500 V heavy duty)
Network frequency	50...60 Hz
Relative symmetric network frequency tolerance	5 %
Prospective line Isc	5 kA
Base load current at high overload	0.4583333333333333 A
Power dissipation in W	Fan 23.0 W 380 V 4 kHz
With safety function Safely Limited Speed (SLS)	True
With safety function Safe brake management (SBC/SBT)	False
With safety function Safe Operating Stop (SOS)	False
With safety function Safe Position (SP)	False
With safety function Safe programmable logic	False
With safety function Safe Speed Monitor (SSM)	False
With safety function Safe Stop 1 (SS1)	True
With sft fct Safe Stop 2 (SS2)	False
With safety function Safe torque off (STO)	True
With safety function Safely Limited Position (SLP)	False
With safety function Safe Direction (SDI)	False
Protection type	Input phase breaks drive Overcurrent between output phases and earth drive Overheating protection drive Short-circuit between motor phases drive Thermal protection drive
Maximum Width	1.77 in (45.0 mm)
Height	12.80 in (325.0 mm)
Depth	9.65 in (245.0 mm)
Net Weight	5.51 lb(US) (2.5 kg)

Environment

Operating position	Vertical +/- 10 degree
Product certifications	CE ATEX NOM GOST EAC RCM KC
Marking	CE ATEX UL CSA EAC RCM
Electromagnetic compatibility	Electrostatic discharge immunity test level 3 IEC 61000-4-2 Radiated radio-frequency electromagnetic field immunity test level 3 IEC 61000-4-3 Electrical fast transient/burst immunity test level 4 IEC 61000-4-4 1.2/50 µs - 8/20 µs surge immunity test level 3 IEC 61000-4-5 Conducted radio-frequency immunity test level 3 IEC 61000-4-6 Voltage dips and interruptions immunity test IEC 61000-4-11
Environmental class (during operation)	Class 3C3 according to IEC 60721-3-3 Class 3S2 according to IEC 60721-3-3
Maximum acceleration under shock impact (during operation)	150 m/s² at 11 ms
Maximum acceleration under vibrational stress (during operation)	10 m/s² at 13...200 Hz
Maximum deflection under vibratory load (during operation)	1.5 mm at 2...13 Hz
Permitted relative humidity (during operation)	Class 3K5 according to EN 60721-3
Volume of cooling air	2483.26 Gal/hr(US) (9.4 m3/h)
Overvoltage category	III
Regulation loop	Adjustable PID regulator
Speed accuracy	+/- 10 % of nominal slip 0.2 Tn to Tn
Pollution degree	2
Ambient air transport temperature	-13…158 °F (-25…70 °C)
Ambient air temperature for operation	14…122 °F (-10…50 °C) without derating 122…140 °F (50…60 °C) with derating factor
Ambient air temperature for storage	-13…158 °F (-25…70 °C)

Ordering and shipping details

Category	22152 - ATV320/ATV312/ATV32 (.25 THRU 7.5HP)
Discount Schedule	CP4B
GTIN	00785901723752
Nbr. of units in pkg.	1
Package weight(Lbs)	5.14 lb(US) (2.33 kg)
Returnability	Yes
Country of origin	ID

Packing Units

Unit Type of Package 1	PCE
Package 1 Height	3.35 in (8.5 cm)
Package 1 width	10.83 in (27.5 cm)
Package 1 Length	12.80 in (32.5 cm)
Unit Type of Package 2	CAR
Number of Units in Package 2	1
Package 2 Weight	5.15 lb(US) (2.334 kg)
Package 2 Height	3.35 in (8.5 cm)
Package 2 width	10.83 in (27.5 cm)
Package 2 Length	12.80 in (32.5 cm)

chanhvinh.com

Unit Type of Package 3	P06
Number of Units in Package 3	24
Package 3 Weight	151.79 lb(US) (68.85 kg)
Package 3 Height	31.50 in (80 cm)
Package 3 width	31.50 in (80 cm)
Package 3 Length	23.62 in (60 cm)

Offer Sustainability

Sustainable offer status	Green Premium product
California proposition 65	WARNING: This product can expose you to chemicals including: Lead and lead compounds, which is known to the State of California to cause cancer and birth defects or other reproductive harm. For more information go to www.P65Warnings.ca.gov
REACh Regulation	REACh Declaration
EU RoHS Directive	Pro-active compliance (Product out of EU RoHS legal scope) EU RoHS Declaration
Mercury free	Yes
RoHS exemption information	Yes
China RoHS Regulation	China RoHS Declaration
Environmental Disclosure	Product Environmental Profile
Circularity Profile	End Of Life Information
WEEE	The product must be disposed on European Union markets following specific waste collection and never end up in rubbish bins.
Upgradeability	Upgraded Components Available

chanhvinh.com

Product data sheet
Dimensions Drawings

ATV320U04N4B

Dimensions

Bottom, Right and Front View

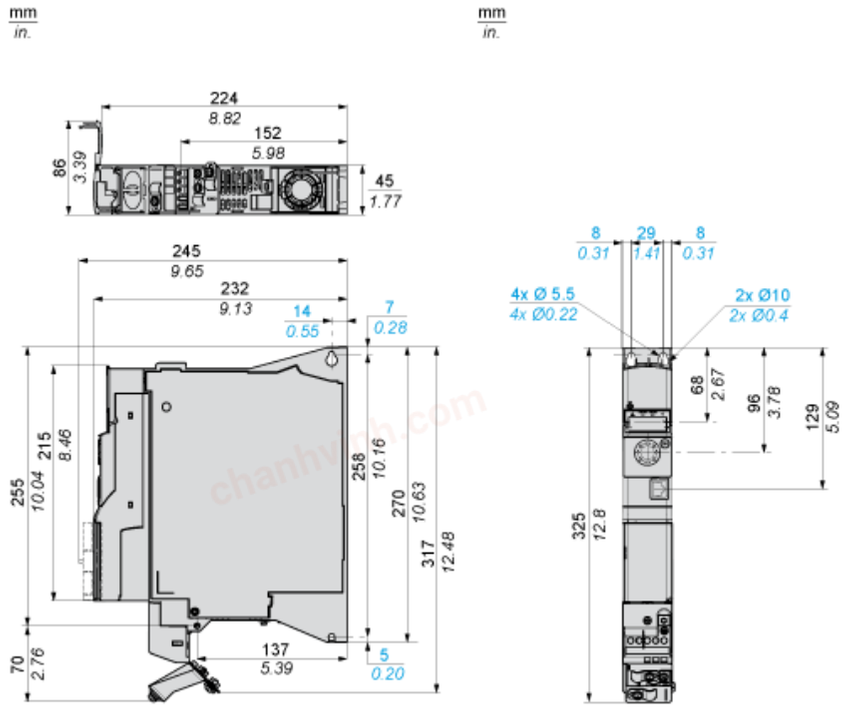

chanhvinh.com

Product data sheet
Mounting and Clearance

ATV320U04N4B

Mounting and Clearance

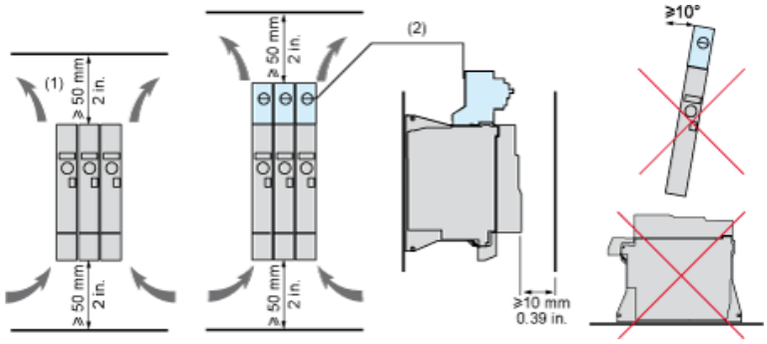

(1) Minimum value corresponding to thermal constraints.
(2) Optional GV2 circuit-breaker

Option: Protection Device, GV2 circuit-breaker

NOTE: The product overall height dimension, including GV2 adapter and EMC plate mounted, becomes 424 mm (16.7 in.) instead of 325 mm (12.80 in.)

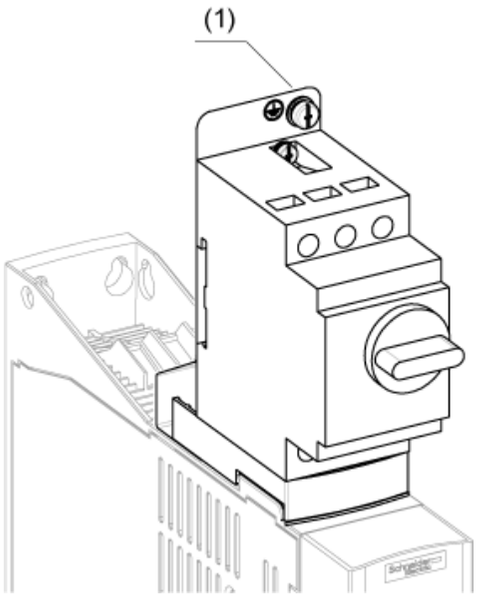

(1) Ground screw (HS type 2 - 5x12)

Life Is On Schneider Electric

chanhvinh.com

Product data sheet
Connections and Schema

ATV320U04N4B

Connection Diagrams

Diagram with Line Contactor

Connection diagrams conforming to standards ISO13849 category 1 and IEC/EN 61508 capacity SIL1, stopping category 0 in accordance with standard IEC/EN 60204-1.

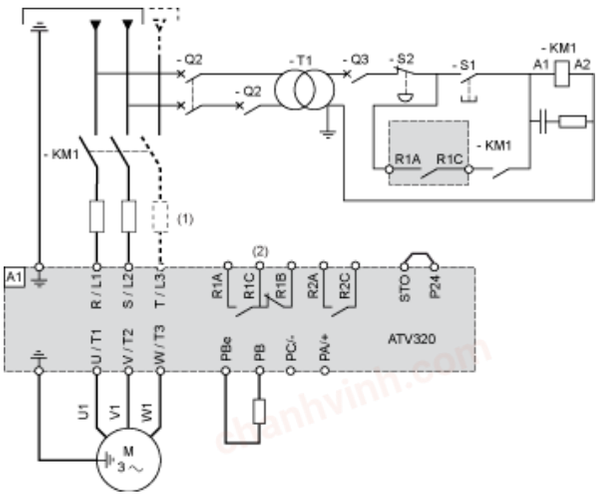

(1) Line choke (if used)
(2) Fault relay contacts, for remote signaling of drive status

Diagram with Switch Disconnect

Connection diagrams conforming to standards EN 954-1 category 1 and IEC/EN 61508 capacity SIL1, stopping category 0 in accordance with standard IEC/EN 60204-1.

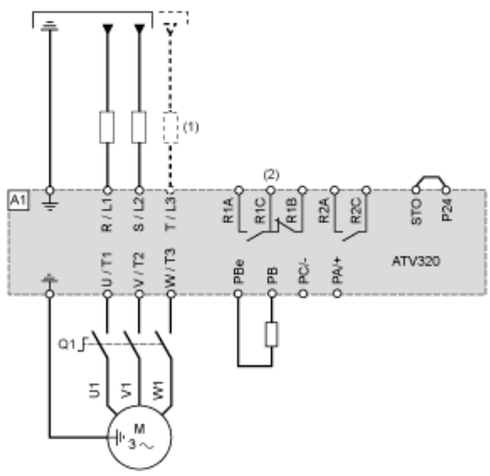

(1) Line choke (if used)
(2) Fault relay contacts, for remote signaling of drive status

Control Connection Diagram in Source Mode

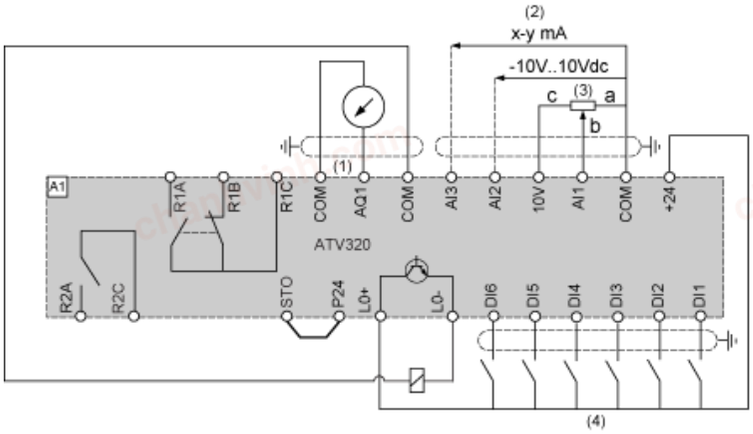

(1) Analog output
(2) Analog inputs
(3) Reference potentiometer (10 kOhm maxi)
(4) Digital inputs

Digital Inputs Wiring

The logic input switch (SW1) is used to adapt the operation of the logic inputs to the technology of the programmable controller outputs.

Switch SW1 set to “Source” position and use of the output power supply for the DIs.

ATV320●●●●●B



ATV320●●●●●C
ATV320●●●●●W(S)



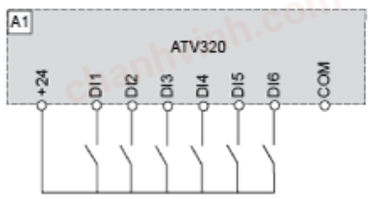

Switch SW1 set to “Source” position and use of an external power supply for the DIs.

ATV320●●●●●B



ATV320●●●●●C
ATV320●●●●●W(S)



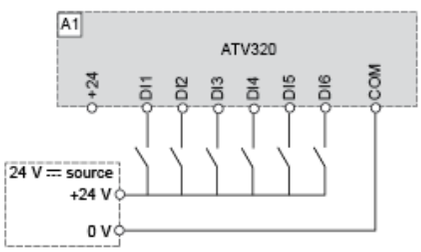

Switch SW1 set to “Sink Int” position and use of the output power supply for the DIs.

ATV320●●●●●B



ATV320●●●●●C
ATV320●●●●●W(S)



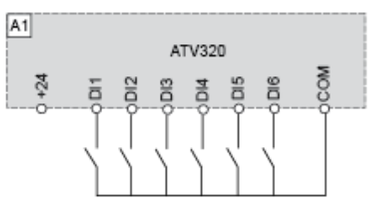

Life Is On Schneider Electric

Switch SW1 set to “Sink Ext” position and use of an external power supply for the DIs.

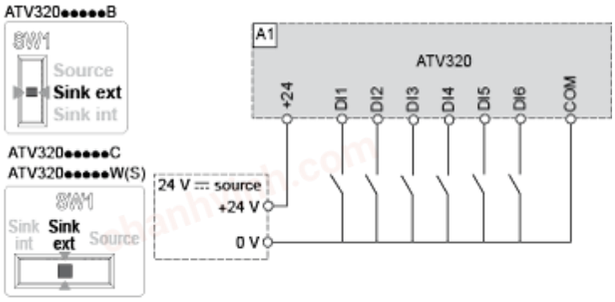

chanhvinh.com

Product data sheet
Performance Curves

ATV320U04N4B

Derating Curves

Derating curve for the nominal drive current (In) as a function of temperature and switching frequency (SF).

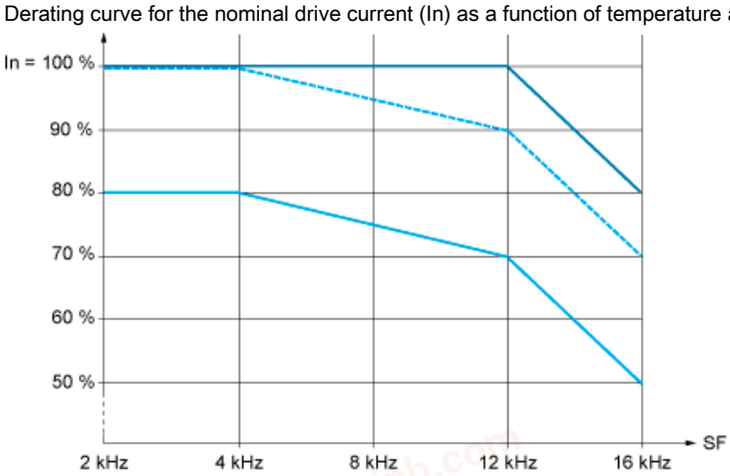

40 °C (104 °F) - Mounting type A, B and C
50 °C (122 °F) - Mounting type A, B and C
60 °C (140 °F) - Mounting type B and C
In : Nominal Drive Current
SF : Switching Frequency

Life Is On Schneider Electric