chanhvinh.com

REVISION W

DO NOT SCALE FROM THIS PRINT

TMM-1XX-XX-XX-X-RA-XXX

- No OF POSITIONS: -01 THRU -50 (PER ROW)
- TERMINAL SPEC: -01: USE T-1S13-XX-X-2
- PLATING SPECIFICATION:
  - -G: 10µ" IN CONTACT AREA, 10µ" GOLD ON TAIL
  - -T: MATTE TIN CONTACT AND TAIL
  - -S: 30µ" SELECTIVE GOLD IN CONTACT AREA, MATTE TIN ON TAIL
  - -L: 10µ" LIGHT SELECTIVE GOLD IN CONTACT AREA, MATTE TIN ON TAIL
  - -F: 3µ" FLASH SELECTIVE GOLD IN CONTACT AREA, MATTE TIN ON TAIL
  - -H: 30µ" HEAVY GOLD IN CONTACT AREA, 3µ" GOLD ON TAIL
  - -TM: MATTE TIN CONTACT AND TAIL
  - -LM: 10µ" LIGHT SELECTIVE GOLD IN CONTACT AREA, MATTE TIN ON TAIL
  - -FM: 3µ" FLASH GOLD IN CONTACT AREA, MATTE TIN ON TAIL
  - -SM: 30µ" SELECTIVE GOLD IN CONTACT AREA, MATTE TIN ON TAIL
- OPTION: POLARIZATION SPECIFY POS -XXX AS POS TO BE OMITTED
- OPTION: -RA: RIGHT ANGLE
- BODY SPECIFICATION: -S: SINGLE (USE TMM-50-S) -D: DOUBLE (USE TMM-50-D)

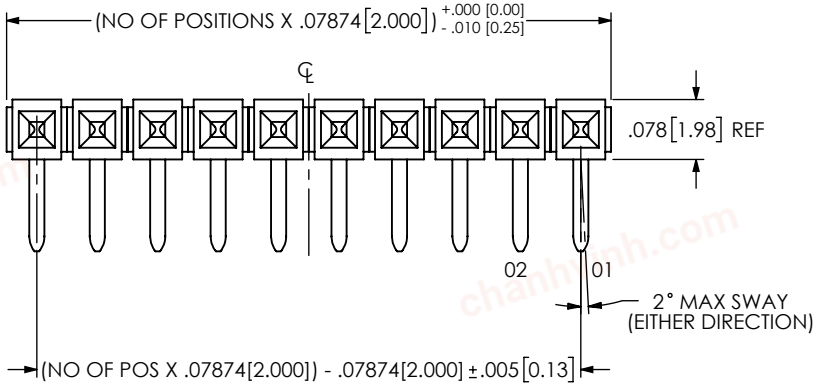

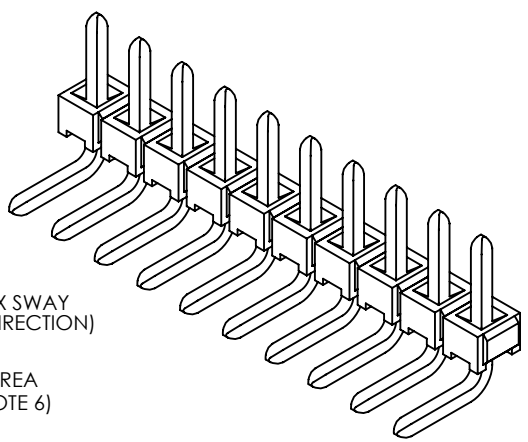

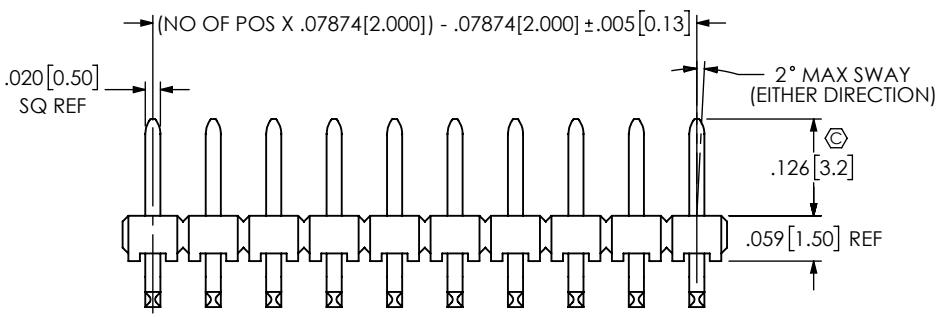

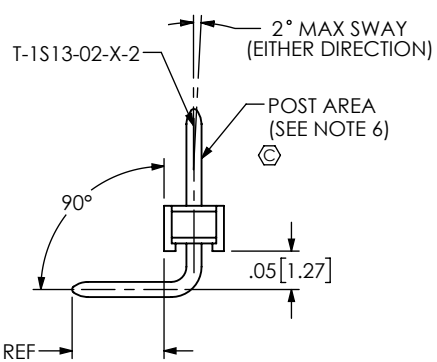

FIG 1
TMM-110-01-X-S-RA SHOWN

NOTES:

1. MAXIMUM ALLOWABLE BOW: .005 INCH/INCH AFTER ASSEMBLY.
2. MAXIMUM PIN ROTATION IN BODY: 2°.
3. MINIMUM PUSHOUT FORCE: .5 LB.
4. Ⓒ REPRESENTS A CRITICAL DIMENSION.
5. ALL DIMENSIONS IN BRACKETS [ ] TO BE MILLIMETERS.
6. NO BANDOLIER MARKS ARE ALLOWED IN THE POST AREA.
7. MAXIMUM CUT FLASH: .010[0.25].
8. PIN NOT ALLOWED TO FILL FROM TAIL SIDE. PIN TO BE FILLED FROM POST SIDE.

UNLESS OTHERWISE SPECIFIED, DIMENSIONS ARE IN INCHES.
TOLERANCES ARE:
DECIMALS: .XX: ±.01, .XXX: ±.005, .XXXX: ±.0020
ANGLES: 2°

PROPRIETARY NOTE

THIS DOCUMENT CONTAINS CONFIDENTIAL AND PROPRIETARY INFORMATION AND ALL DESIGN, MANUFACTURING, REPRODUCTION, USE, PATENT RIGHTS AND SALES RIGHTS ARE EXPRESSLY RESERVED BY SAMTEC, INC. THIS DOCUMENT SHALL NOT BE DISCLOSED, IN WHOLE OR PART, TO ANY UNAUTHORIZED PERSON OR ENTITY NOR REPRODUCED, TRANSFERRED OR INCORPORATED IN ANY OTHER PROJECT IN ANY MANNER WITHOUT THE EXPRESS WRITTEN CONSENT OF SAMTEC, INC.

MATERIAL: DO NOT SCALE DRAWING SHEET SCALE: 4:1

INSULATOR:
-S: TORAY LX70G35, COLOR: BLACK
-D: VECTRA E130iD2, COLOR: BLACK

TERMINAL: PHOSPHER BRONZE

F:\DWG\SW\Exisprod\Assembly\2mm\TMM-1XX-XX-XX-X-RA-XXX-ASM.SLDDRW

samtec
520 PARK EAST BLVD, NEW ALBANY, IN 47150
PHONE: 812-944-6733 FAX: 812-948-5047
e-Mail info@SAMTEC.com code 55322

DESCRIPTION: 2MM TERMINAL STRIP ASSEMBLY (R/A)

DWG. NO. TMM-1XX-XX-XX-X-RA-XXX

BY: REIDINGER 05/22/1991 SHEET 1 OF 2

chanhvinh.com

REVISION W

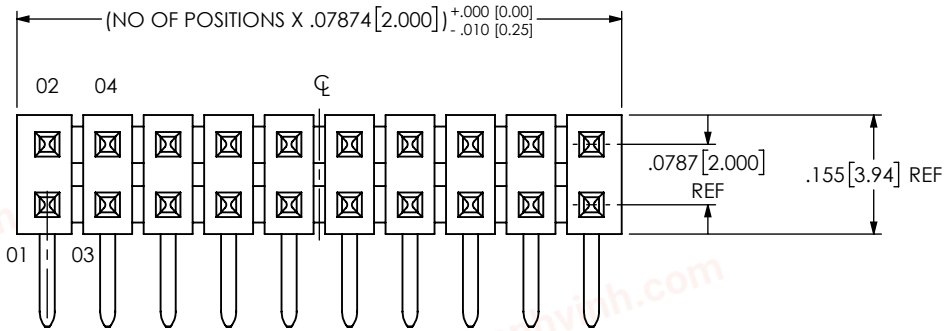

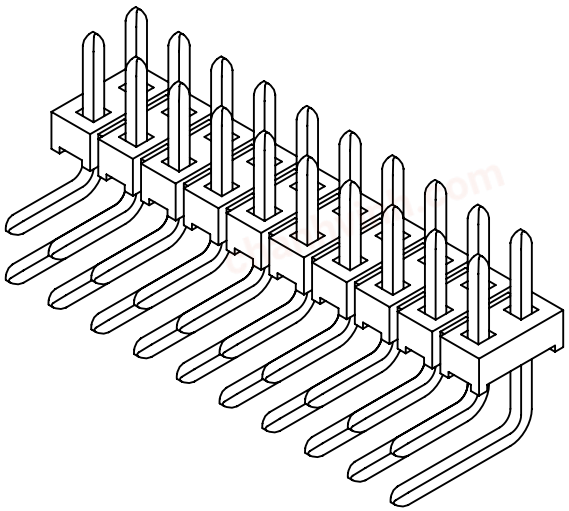

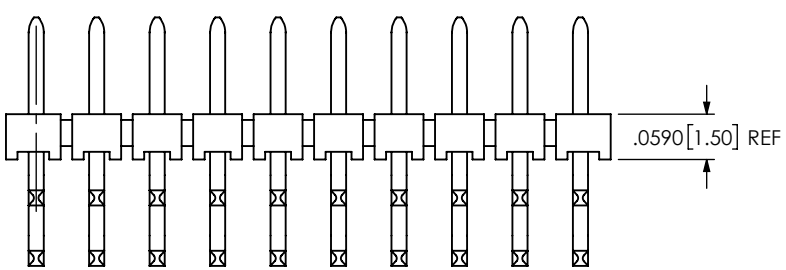

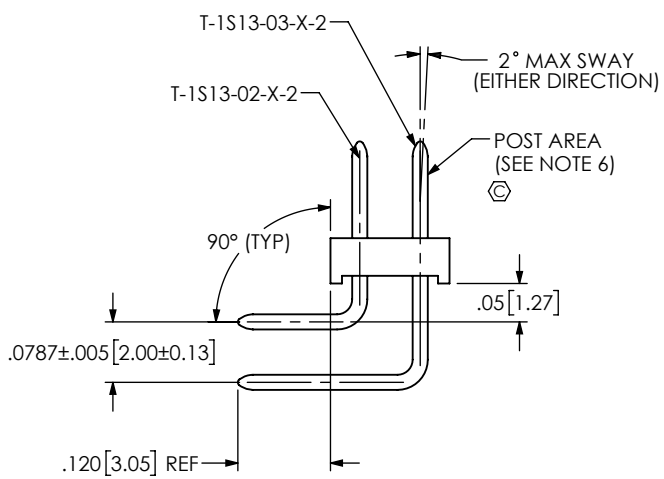

FIG 2
TMM-110-01-X-D-RA SHOWN
(DIFFERENT AS SHOWN, OTHERWISE SAME AS FIG 1)

PROPRIETARY NOTE
THIS DOCUMENT CONTAINS CONFIDENTIAL AND PROPRIETARY INFORMATION AND ALL DESIGN, MANUFACTURING, REPRODUCTION, USE, PATENT RIGHTS AND SALES RIGHTS ARE EXPRESSLY RESERVED BY SAMTEC, INC. THIS DOCUMENT SHALL NOT BE DISCLOSED, IN WHOLE OR PART, TO ANY UNAUTHORIZED PERSON OR ENTITY NOR REPRODUCED, TRANSFERRED OR INCORPORATED IN ANY OTHER PROJECT IN ANY MANNER WITHOUT THE EXPRESS WRITTEN CONSENT OF SAMTEC, INC.

DO NOT SCALE DRAWING

SHEET SCALE: 1:2

samtec
520 PARK EAST BLVD, NEW ALBANY, IN 47150
PHONE: 812-944-6733 FAX: 812-948-5047
e-Mail info@SAMTEC.com code 55322

DESCRIPTION:
2MM TERMINAL STRIP ASSEMBLY (R/A)

DWG. NO.
TMM-1XX-XX-XX-X-RA-XXX

BY: REIDINGER 05/22/1991 SHEET 2 OF 2

F:\DWG\SW\Exisprod\Assembly\2mm\TMM-1XX-XX-XX-X-RA-XXX-ASM.SLDDRW