chanhvinh.com

July 2012

RoHs+Halogen Compliant
ecoparts

SOLID TANTALUM CAPACITORS

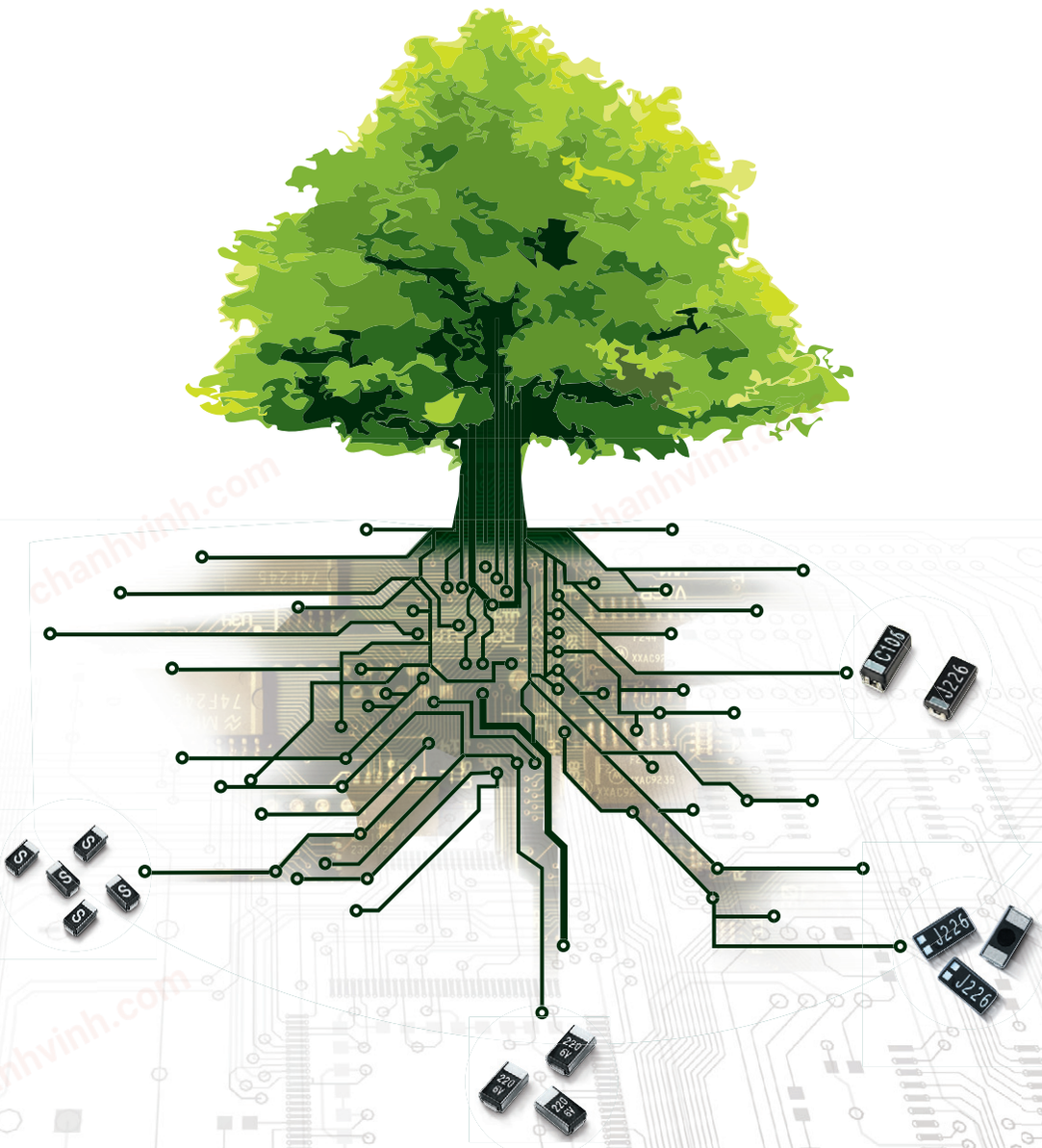

chanhvinh.com



We declare that all our tantalum capacitors are produced in accordance with EU ROHS and REACH Directive.

1. RoHS Compliance

The following restricted materials are not used in packaging materials as well as products in compliance with the law and restriction.

– Cd, Pb, Hg, Cr+6, PBB, PBDE

2. No use of materials breaking Ozone layer

The following ODS materials are not used in our fabrication process.

– ODS material : Freon, Haron, 1–1–1 TCE, CCl4, HCFC

If you want more detailed Information,Please Visit Samsung Electro–mechanics Website [http://www.semlcr.com]

chanhvinh.com

chanhvinh.com

CONTENTS

Precautions in using Tantalum Capacitors 4

4 Characteristics Explanation 8

Manganese Dioxide Type

- SCN Series –Standard series 14
- SCS Series –Extended series 17
- SCS P Series –2012 size miniaturized 21
- SCM Series –1608 size ultra miniaturized 23
- SCF Series –Face–Down type 25
- SCE Series –Low–ESR 26
- SCL Series –Low–Profile 29

Conductive Polymer Type

- PCS Series –Ultra Low–ESR 33
- PCL Series –Low–ESR, Low–Profile 34

Marking & Taping Specification

- Marking Specification 35
- Taping Specification 40

chanhvinh.com

Precautions in using Tantalum Capacitors

Operational Attentions

The operational attentions to the use of the tantalum capacitors are as follows:
- Electrical
- Environmental
- Conditions for mounting on equipment and circuit boards
- Mechanical vibration, shock

If the tantalum capacitors are used without satisfying any one of these conditions, the probability of short-circuiting, current leakage or other problems to occur increases. To avoid such problems, observe the following precautions when using the tantalum capacitors.

Correct Use
[Guality grades]
Samsung devices are classified into the following quality grades in accordance with their applications. The quality grade of all devices in this document is "standard"; the devices in this document cannot be used for "special" or "specific" quality grade applications. Customers who intend to use a product or products in this document for applications other than those specified under the"standard" quality grade must contact Samsung sales representative in advance.

Standard: This quality grade is intended for applications in which failure of malfunction of the device is highly unlikely to cause harm to persons or damage to property, or be the source of any negative effects or problems in the wider community.

Special: This quality grade is intended for special applications that have common requirements, such specifi industrial fields. Devices with a "special" quality grade are designed, manufactured, and tested using a more stringent quality assurance program than that used for "stardard" grade devices. There is a high possibility that failure or malfunction of the device when used for applications in this category will cause harm to persons or damage to property, or create negative effects or problems in the wider community.

Specific: Devices with a "specific" quality grade are designed, manufactured, and tested using a quality assurance program that is designed by the customer or that is created in accordance with the customer's specifications. There is an extremely high possibility that failure of malfunction of the device when being used for applications in the wider community. Customers who use Samsung's products for these "specific"application must conclude an individual quality agreement and /or development agreement with Samsung.
A quality assurance program designated by the customer must also be determined in advance

[Cautions]
Samsung devices are classified into the following three quality grades:"Standard," "Special," and "Specific."
The Specific quality grade applies only to devices developed based on a customer-designated quality assurance program for a specific application.
The recommended applications of a device depend on its quality grade, as indicated below.
Customers must check the quality grade of each device before using it in a particular application.

Standard: Computers, office equipment, communications equipment, test and measurement equipment, audio and visual equipment, home electronic appliances, machine tools, personal electronic equipment, and industrial robots

Special : Transportation equipment(automobiles, trains, ships, etc.), traffic control systems, anti-disaster systems, anti-crime systems, safety equipment, and medical equipment
(not specifically designed for life support)

Specific: Aircraft, aerospace equipment, submersible repeaters, nuclear reactor control systems, life support systems, or medical equipment for life support, etc.

The quality grade of Samsung devices is "Standard" unless otherwise specified in Samsung's data sheets or data books.
if customers intend to use Samsung devices for applications other than those specified for Standard quality grade, they should contact an Samsung sales representative in advance.

Circuit designing cautions
[Manganese dioxide type]
Low voltage application or High resistance connected to the capacitor in series
A problem could possibly result if the following application exists:
Low voltage, high resistance connected to the capacitor in series, and a circuit sensitive to leakage
current. A problem could occur due to the lower recovery of the leakage current characteristic of
tantalum capacitor, caused by heat stress during the soldering process.

[Polymer type]
Prohibited circuits
Since problems can be expected, polymer products cannot be used on the following circuits.
1) High impedance voltage retention circuits
2) Coupling circuits
3) Time constant circuits
4) Circuits greatly affected by leakage current
5) The circuit in which two or more samsung polymer products are connected in a series so as to raise the endurance voltage

1. Operating Voltage

1) The voltage derating factor should be as great as possible.
Under normal conditions, the operating voltage should be reduced to 50% or less of the rating. It is recommended that the operating voltage be 30% or less of the rating, particularly when the tantalum capacitors are used in a low-impedance circuit(see Figs. 1, 2, and 3).

2) For circuits in which a switching, charging, discharging, or other momentary current flows, it is recommended that the operating voltage be 30% or less of the rating, with a resistor connected in series to limit the current to 300 mA or less.

3) When the tantalum capacitors are to be used at an ambient temperature of higher than 85℃, the recommended operating range shown in Fig. 3 should not be exceeded

※ **Low-impedance circuits**

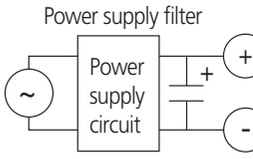

Fig. 1

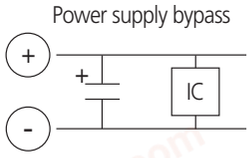

Fig. 2

chanhvinh.com

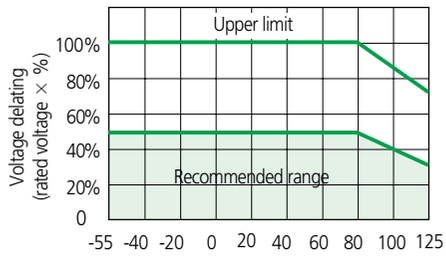

Fig. 3

2. Ripple

The maximum permissible ripple voltage and current are related to the ratings case size. Please consult us detail informations.

2.1 Ripple Current

The maximum permissible ripple current, IMAX, is calculated as follows:

$$IMAx = \sqrt{\frac{PMAX}{ESR(f)}}$$

where:
IMAX : Maximum permissible capacitor ripple current (Arms).
PMAX : Maximum permissible capacitor power loss (W).
Varies with the ambient temperature and case size.
Calculated according to Table 1.

ESR (f): Capacitor equivalent series resistance (Ω).

Since the ESR(f) value varies with the ripple frequency, however, the following correction must be made in accordance with the operating frequency (see Fig. 4).

ESR(f) = K · ESR(120)
K: Coefficient for the operating frequency (Fig. 4).

$$ESR(120) = Tan\,\delta \cdot Xc = \frac{Tan\,\delta}{2\pi f C}$$

where:
ESR (120) : Equivalent series resistance at 120 Hz (Ω).
Xc : Capacitive reactance at 120 Hz (Ω).
C : Electrostatic capacitance at 120 Hz (μF).
f : Operating frequency (Hz).

Table 1 Maximum permissible power loss values (PMAX) by case size

Ambient temperature(℃)	PMAX(W)						
	U	J,Q,K	P,R	A,S	B,T	C	D
25	0.015	0.015	0.015	0.030	0.030	0.030	0.050
55	0.010	0.010	0.010	0.019	0.019	0.019	0.032
85	0.005	0.005	0.005	0.010	0.010	0.010	0.018

Frequency	K
120	1.0
400	0.8
1k	0.65
10k	0.50
20k	0.45
40k	0.43
100k	0.40
1M	0.35

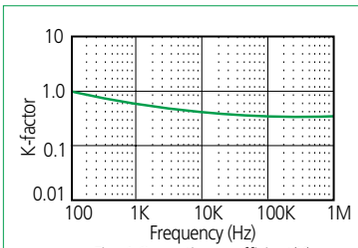

Fig. 4 Correction coefficient(K)

2.2 Ripple Voltage

If an excessive ripple voltage is applied to the tantalum capacitors, their internal temperature rises due to Joule heat, resulting in the detriment of their reliability.

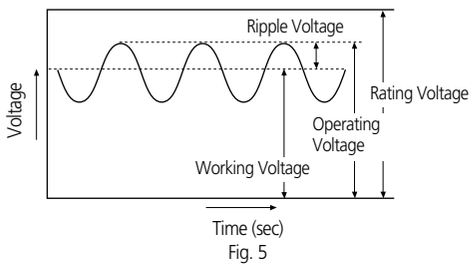

Fig. 5

1) The tantalum capacitors must be used in such a conditions that the sum of the Working voltage and ripple voltage peak values does not exceed the rated voltage (Fig. 5)

2) Ensure that an reverse voltage due to superimposed voltages is not applied to the capacitors.

3) The maximum permissible ripple voltage varies with the rated voltage. Ensure that ripple voltage does not exceed the values shown in Figs. 6 and 7. If, however, the capacitors are used at a high temperature, the maximum permissible ripple voltage must be calculated as follows:

Vrms(at 55℃) = 0.7 × Vrms(at 25℃)
Vrms(at 85℃) = 0.5 × Vrms(at 25℃)
Vrms(at 125℃) = 0.3 × Vrms(at 25℃)

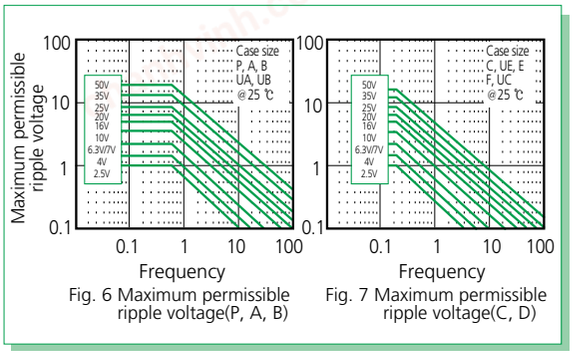

Fig. 6 Maximum permissible ripple voltage(P, A, B)
Fig. 7 Maximum permissible ripple voltage(C, D)

3. Reverse Voltage

Solid tantalum capacitors are polarized device and may be permanently damaged or destroyed, if connected with the wrong polarity.

1) The tantalum capacitors must not be operated and changed inreverse mode. And also the capacitors must not be used in an only AC circuit.

2) The tantalum capacitor dielectric has a rectifying characteristics. Therefore, when a reverse voltage is applied to it, a large current flows even at a low reverse voltage.As a result,it may spontaneously generate heat and lead to shorting.

3) Make sure that the polarity and voltage is correct when applying a multimeter or similar testing instrument to the capacitors because a reverse voltage or overvoltage can be accidentally applied.

4) When using the capacitors in a circuit in which a reverse voltage is applied, consult your local SAMSUNG ELECTRO-MECHANICS agent. If the application of an reverse voltage is

Precautions in using Tantalum Capacitors
4 Characteristics Explanation
SCN Series
SCS Series
SCS-P Series
SCM Series
SCF Series
SCE Series
SCL Series
PCS Series
PCL Series
Marking Specification
Taping Specification

chanhvinh.com

unavoidable, it must not exceed the following values:
At 20° C: 10% of the rated voltage of 1 V, whichever smaller.
At 85° C: 5% of the rated voltage or 0.5 V, whichever smaller.

4. Reliability of Tantalum Capacitors

4.1 General

The failure rate of the tantalum capacitor varies with the derating ratio, ambient temperature, circuit resistance, circuit application, etc. Therefore, when proper selections are made so as to afford additional margins, higher reliabilities can be derived from the tantalum capacitors. Some examples of actual failure rates are presented below for your reference.

4.2 Failure Rate Calculation Formula

The tantalum capacitors are designed to work at their basic failure rates shown in Table 3 that prevail when the rated voltage is applied for 1000 hours at 85℃.

Table 3 Basic failure rate

Type	Classification	Basic failure rate
SCF	Face - down type	1%/1000h
SCE	Low ESR type	
SCM	Ultra-Miniature type (0603)	
SCL	Low profile type	
SCS	Small type	
SCN	Standard type	
PCS,PCL	Conductive Polymer type	

· Failure rate calculation formula

$\lambda use = \lambda 85 \times K_V \times K_R$

λuse: Estimated capacitor failure rate under the operating conditions.

$\lambda 85$: Basic failure rate (Table 3)

K_V: Failure rate correction coefficient by the ambient temperature and derating factor.

K_R: Failure rate correction coefficient by the circuit resistance, which is the series-connected resistance divided by the voltage applied to the capacitor. This resistance is connected in series when the power supply side is viewed from the capacitor side.
K (derating factor)=operating voltage/rated voltage

4.3 Reliability Prediction

Solid tantalum capacitors exhibit no degration failure mode during shelf storage and show a constantly decreasing failure rate(i.e., absence of wearout mechanism) during life tests.
This failure rate is dependent upon three important application conditions:DCvoltage, temperature, and circuit impedance.
Estimates of these respective effects are provided by the reliability nomograph.(Figure 9.)
The nomograph relates failure rate to voltage and temperature while the table relates failure rate to impedance.
These estimates apply to steady-state DC condition, and they assume usage within all other rated conditions.

Standard conditions, which produce a unity failure rate factor, are rated voltage, +85℃, and 0.1 ohm-per-volt impedance.
While voltage and temperature are straight-forward, there is sometimes difficulty in determining impedance. What is required is the circuit impedance seen by the capacitor. If several capacitors are connected in parallel, the impedance seen by each is lowered by the source of energy stored in the other capacitors. Energy is similarly stored in series inductors.

Voltage "de-rating" is a common and useful approach to improved reliability. It can be persued too far, however, when it leads to installation of higher voltage capacitors of much larger size.

It is possible to lose more via higher inherent failure rate than is gained by voltage derating. SAMSUNG typically recommends 50% derating, especially in low impedance circuits.

Failure rate is conventionally expressed in units of percent per thousand hours. As a sample calculation, suppose a particular batch of capacitors has a failure rate of 0.5%/ Khr under standard conditions.

What would be the predicted failure rate at 0.7times rated voltage, 60℃ and 0.6 Ω / V?

The nomgraph gives a factor of 7×10^{-2} and the table gives a factor of 0.4.

The failure rate estimate is then :
$0.5 \times 7 \times 10^{-2} \times 0.4 = 1.4 \times 10^{-2}$ or 0.014%/ Khr

Table 4 Circuit Impedance Reliability Factors

Circuit Impedance (ohms / volt)	Failure Rate Impedance (multiplying factor)
0.1	1.0
0.2	0.8
0.4	0.6
0.6	0.4
0.8	0.3
1.0	0.2
2.0	0.1
3 or greater	0.07

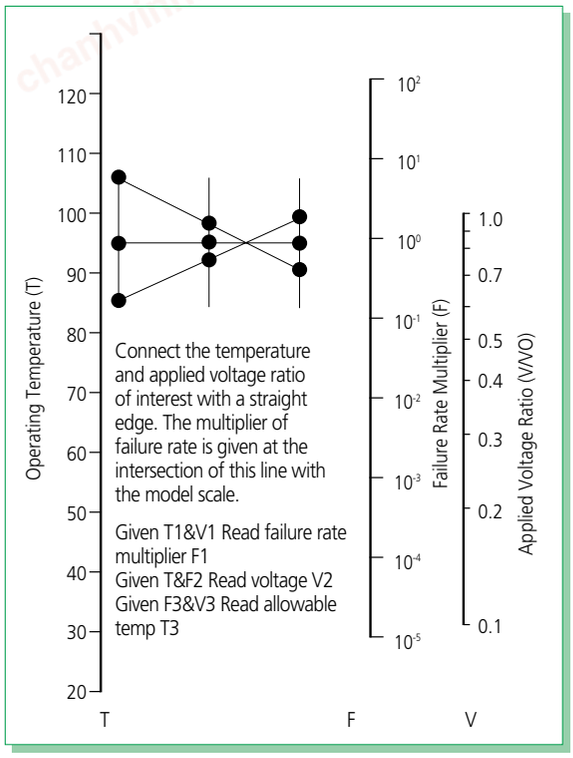

Fig. 9 Reliability Nomograph

chanhvinh.com

5. Mounting Precautions

5.1 Limit Pressure on Capacitor Installation with Mounter

A capacitor that has been damaged should be discarded to avoid later problems resulting from mechanical stress. Pressure must not exceed 4.9 N with a tool end diameter of 1.5 mm when applied to the capacitors using an absorber, centering tweezers, or the like.

An excessively low absorber setting position would result in not only the application of undue force to the capacitors but capacitor and other component scattering,circuit board wiring breakage, and / or cracking as well, particularly when the capacitors are mounted together with other chips having a height of 1 mm or less.

5.2 Flux

(1) Select a flux that contains a minimum of chlorine and amine.
(2) After flux use, the chlorine and amine in the flux remain and must therefore be removed.

5.3 Recommended Soldering Pattern Dimensions

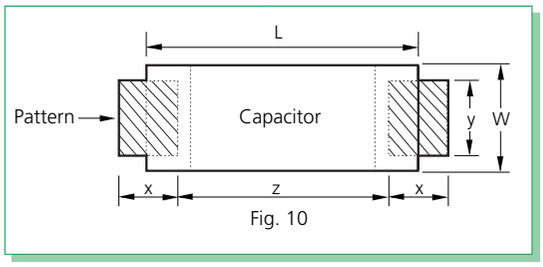

Fig. 10

General type

Dimensions / Case	Capacitors size		Pattern dimensions		
	L	W	x	y	z
J,Q,K	1.6	0.85	0.9	1.0	0.7
P,R	2.0	1.25	1.2	1.1	0.8
A,S	3.2	1.6	1.6	1.2	1.2
B,T	3.5	2.8	1.6	2.2	1.4
C,V	5.8	3.2	2.3	2.4	2.4
D,W	7.3	4.3	2.3	2.6	3.8

Face - down type

Dimensions / Case	Capacitors size		Pattern dimensions		
	L	W	x	y	z
U	1.0	0.5	0.3	0.4	0.65

5.4 Chip Soldering Temperature and Time

Capacitors are capable of withstanding the following soldering temperatures and conditions;

(1) Waved soldering
Capacitor body temperature: 230℃ ~ 260℃
Time: 5 seconds or less

(2) Reflow soldering see figures

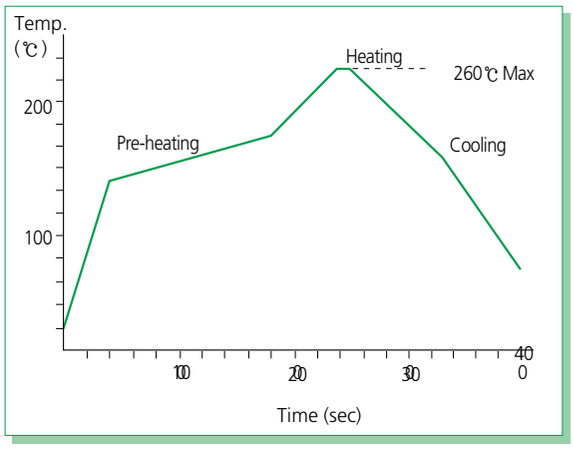

FIGURE: Typical Temperature Profile of Reflow Soldering for Pb-free Products (235℃~245℃, Recommendation Temperature)

With Pb-free products, if used under 235℃, the quality confirmation must be needed.

(3) Soldering with a soldering iron
The use of a soldering iron should be avoided wherever possible If it is unavoidable, follow the instructions set forth in Table 5. The time of soldering with an iron should be one.

Table 5

Tape	All case
Soldering-iron tip temperature	350℃ MAX
Time	3sec MAX
Soldering-iron power	30W MAX

5.5 Cleaning after Mounting

The following solvents are usable when cleaning the capacitors after mounting. Never use a highly active solvent.
· Halogen organic solvent (HCFC225, etc.)
· Alcoholic solvent (IPA, ethanol, etc.)
· Petroleum solvent, alkali saponifying agent, water, etc.

Circuit board cleaning must be conducted at a temperature of not higher than 50° C and for an immersion time of not longer than30 minutes. When an ultrasonic cleaning method is used, cleaning must be conducted at a frequency of 48 kHz or lower, at an vibrator output of 0.02 W/cm3, at a temperature of not higher than 40° C, and for a time of 5 minutes or shorter.

NOTE 1: Care must be exercised in cleaning process so that the mounted capacitor will not come into contact with any cleaned object or the like or will not get rubbed by a stiff brush or the like. If such precautions are not taken particularly when the ultrasonic cleaning method is employed, terminal breakage may occur.
NOTE 2: When performing ultrasonic cleaning under conditions other than stated above, conduct adequate advance checkout.

6. Other

(1) For further details, refer to EIAJ RCR-2368, Precautions and Guidelines for Using Electronic Device Tantalum Capacitors.
(2) If you have any questions, feel free to contact your local SAMSUNG ELECTRO-MECHANICS agent.

4 Characteristics Explanation

1. Capacitance

1-1. Rated Capacitance(CR)
This is the nominal rated capacitance.
capacitance is measured at 120㎐, 1.0V RMS, DC Bias 1.0V~2.0V

1-2. Capacitance tolerance
This is the permissible variation of the actual value of the capacitance from the rated value.
Available in standard EIA nominal values with ±20% & ±10% tolerance.

1-3. Temperature dependence of capacitance.
The capacitance of a tantalum capacitance varies with temperature.

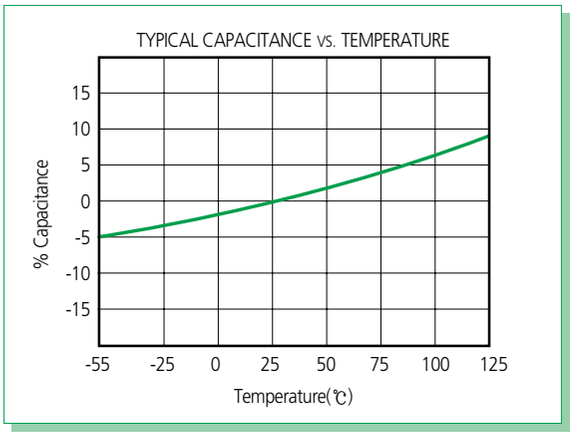

1-4. Frequency dependence of capacitance
The effective capacitance decrease as frequency increases.
Beyond 100㎑ the capacitance continues to drop until resonance is reached.

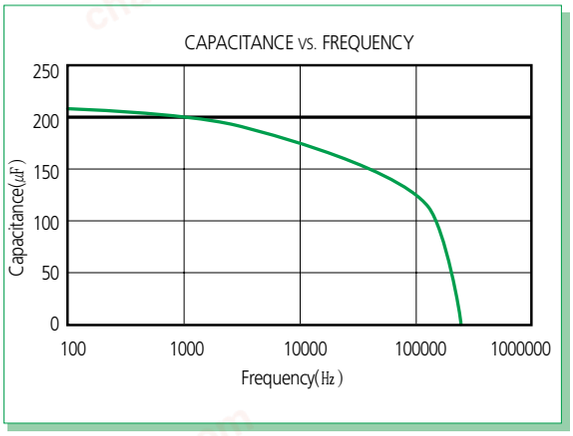

2. Voltage

2-1. Rated voltage(VR)
This is the rated d.c. voltage for continuous operation at 85℃.

2-2. Category voltage(VC)
Tantalum capacitors are designed to operate continuously over the temperature range of -55℃ to +85℃ with operating voltage. these capacitance may be operated at 125℃ with 2/3 derated voltage as shown in fig.

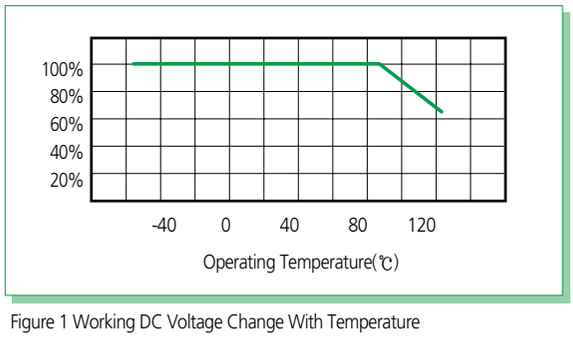

Figure 1 Working DC Voltage Change With Temperature

2-3. Surge voltage(VS)
Surge voltage is the maximum voltage to which the capacitor can be subjected under transient conditions: including the sumof peak AC ripple, DC bias and any transients.
the surge voltage must not be used as a parameter in the design of circuits in which, in the normal course of operation, the capacitor is periodically charged and discharged.

85℃		125℃	
Rated Voltage(Vdc)	Surge Voltage(Vdc)	Category Voltage(Vdc)	Surge Voltage(Vdc)
2.5	3.1	1.6	2.0
4	5.2	2.7	3.52
6.3	8	4	5
10	13	4	8
16	20	10	12
20	26	13	16
25	32	17	20
35	46	23	28
50	65	33	40

2-4. Reverse voltage and polarity.
Solid tantalum capacitors are polarized device and may be permanently damaged or destryed if connected with the wrong polarity. They are intended to cover short term reversals of polarity, such as those occuring during switching transients of during a minor portion of an impressed waveform.

chanhvinh.com

continuous application of reverse voltage without normal polarization will result in a degration of leakage current.
The peak reverse polarity voltage applied to the capacitor must not exceed:

at +20℃, 10% of rated voltage
at +85℃, 5% of rated voltage
or 1V,whichever is greater.

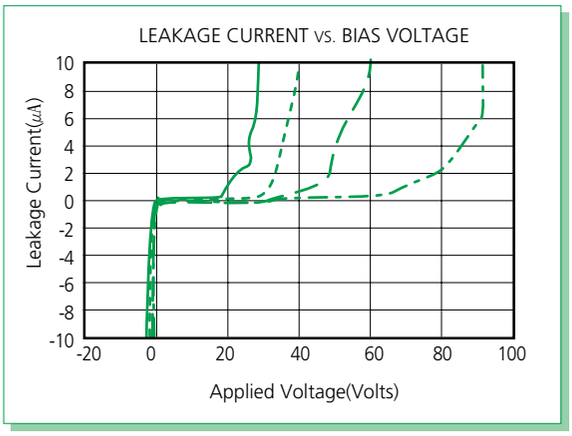

If higher voltages of reverse polarity occur, then two capacitors with the same norminal capacitance and rated voltage should be connected in series in such a way as to form a non-polar combination(back-to-back configuration with the negative terminations connected together). when d.c. voltage are switched, measures must be taken to ensure that the reverse polarized capacitance avoid a reduction in its life expectancy.

2-5.Super imposed A.C. voltage($V_{r.m.s}$) Ripple voltage.
This is the maximum r.m.s alternating voltage ;superimposed on a d.c. voltage, that may be applied to a capacitor.

1) The sum of the working voltage and ripple voltage peak value does not exceed the rated d.c working voltage.
2) Ensure that an reverse voltage due to super imposed voltages is not applied to the capacitors.
3) If,hoeever,the capacitors are used at a high temperature, the maximum permissible ripple voltage must be calculated as follows :

Vrms (at 55℃) =0.7×Vrms(at 25℃)
Vrms (at 85℃)=0.5×Vrms(at 25℃)
Vrms (at 125℃)=0.3×Vrms(at 25℃)

3. Dissipation Factor (D.F.)

3.Dissipation factor (D.F.)
Refer to part number tables for maximum DF limits.
Dissipation factor is measured at 120 Hz, 1.0Volt RMS and 1.0~2.0 volts DC at +25℃.
The application of dc bias causes a small reduction in DF, about 0.2% when full rated voltage is applied DF increases with increasing frequency.

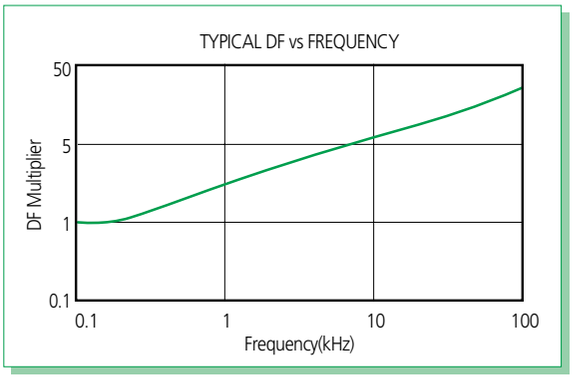

Dissipation factor is a very useful low frequency (120hz) measurement of the resistive component of a capacitor.
It is the ratio of the equivalent series resistance(esr) to the capacitive reactance, (Xc) and is usually expressed as a percentage.
It is directly proportional to both capacitance and frequency.
dissipation factor loses its importance at higher frequencies, (above about 1 khz), when impedance. (z) and equivalent series resistance (esr) are the normal parameters of concern.
$DF= R/Xc =2\pi fCR$
where DF=dissipation factor
R=equivalent series resistance(ohms)
Xc=capactive reactance(ohms)
f =frequency(hertz)
C=series capacitance(farads)

DF is also referred to as tanδ or "loss tangent."
The "quality factor" "Q" is the reciprocal of DF.
DF increases with temperature above +25℃ and may also increase at lower temperatures. Unfortunately, one general limit for DF cannot be specified for all capacitance/voltage combinations, nor can response to temperature be simply stated.

Precautions in using Tantalum Capacitors
4 Characteristics Explanation
SCN Series
SCS Series
SCS-P Series
SCM Series
SCF Series
SCE Series
SCL Series
PCS Series
PCL Series
Marking Specification
Taping Specification

chanhvinh.com

4. D. C. Leakage Current

The leakage current is dependent on the voltage applied, the elapsed time since the voltage was applied the component temp. it is measured at +25℃ with the rated voltage applied. the rated d.c voltage shall be applied to terminals across the test capacitor Cx. by the method as shown below.

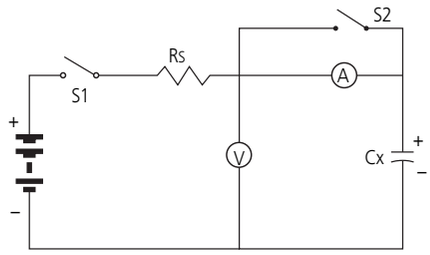

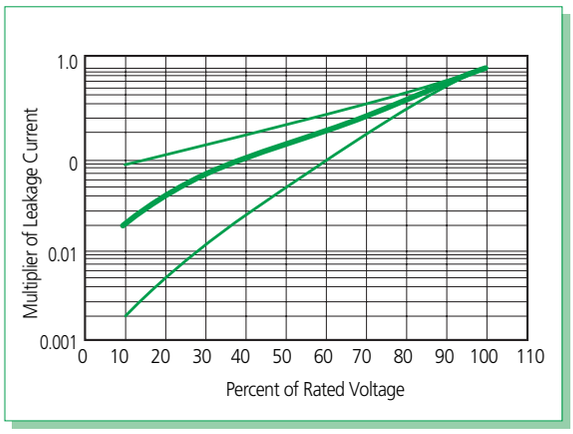

Voltage vs DC Leakage Current

5-1 Temperature dependence of the leakage current

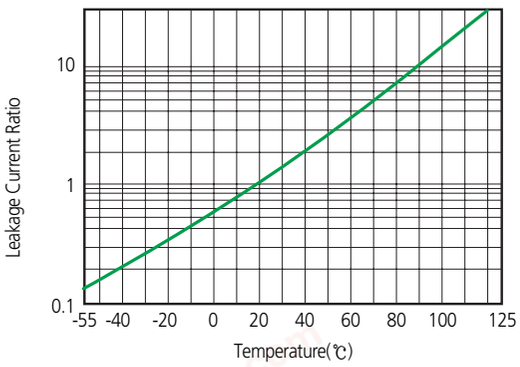

when operating at high temperature range from 85℃ to 125℃, the operation shall be carried out at a derated voltage or less. Derating voltage Vt at any temperature between 85℃ and 125℃ shall be calculated by the following equation.

$$V_t = V_r - \frac{V_r - V_d}{40} (T - 85)$$

when V_t : Derated voltage at any temp.
V_r : Rated voltage
V_d : Derated voltage at 125℃

5-2 Leakage Current vs Rated voltage

The leakage current drops rapidly below the value corresponding to the rated voltage VR When reduced voltage are applied.
The effect of voltage derating on the leakage current is shown in the graph.
This will also give a significant increase in the reliability for any application.

chanhvinh.com

5. Impedance(Z) & ESR

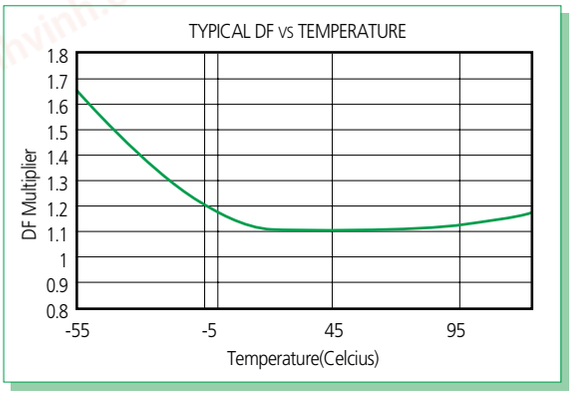

4. Impedauce(Z), and Equivalent Series Resistance(ESR)

4-1 Impedance(Z)

The impedance is measured at 25℃ and 100KHZ.
this is the ratio of voltage to current at a specified frequency.
three factors contribute to the impedance of a tantalum capacitor; the resistance of the semiconductor layer; the capacitance value and the inductance of the electrode and leads. at high frequencies the inductance of leads becomes a limiting factor.

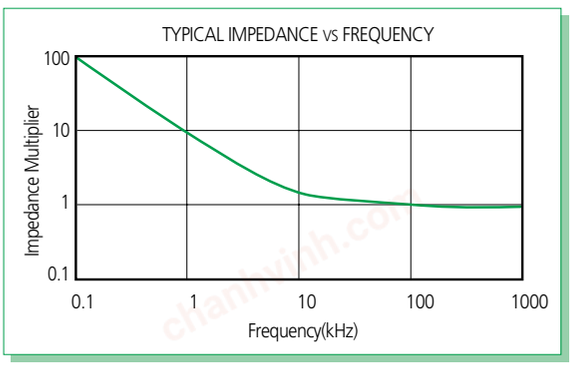

Total impedance of the capacitor is the vector sum of capacitive reactance(Xc) and ESR, below resonance; above resonance total impedance is the vector sum of inductive reactance(XL) and ESR (Figure 5 and 6).

$$X_C = \frac{R}{2\pi f C} \text{ ohm}$$

where:
f = frequency, Hertz
C = capacitance, Farad

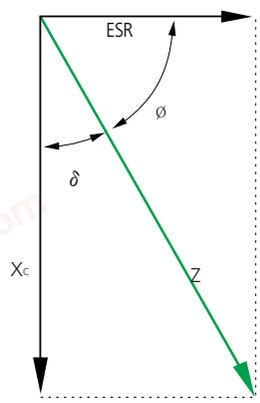

Total impedance of the Capacitor above Resonance

$$X_L = 2\pi f L$$

where:
f = frequency, Hertz
L = inductance, Henries

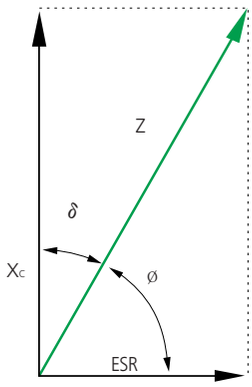

Total impedance of the Capacitor above Resonance

4-2. Equivalent Series Resistance (ESR)

The ESR is measured at 25℃ and 100KHZ.
Resistance losses occur in all practical forms capacitors.
Equivalent Series Resistance (ESR) is the preferred high-frequency statement of the resistance unavoidably appearing in these capacitors. ESR is not a pure resistance, and it decreases with increasing frequency.
The ESR is frequency dependent and can be found by using the relationship;

ESR = tan δ / 2πfC

ESR is the contributing factors to impedance, and at high frequencies (100KHZ and above) It becomes the dominant factor.

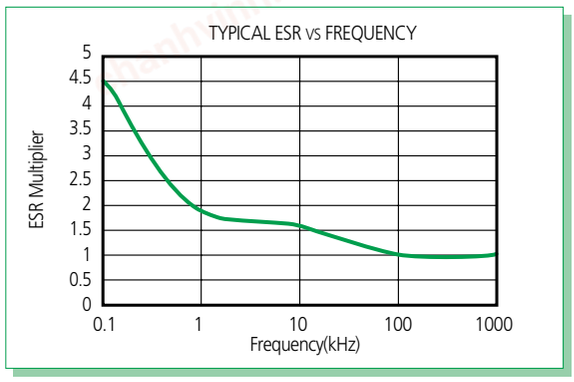

Typical impedance versus frequency curve is shown in Figure.

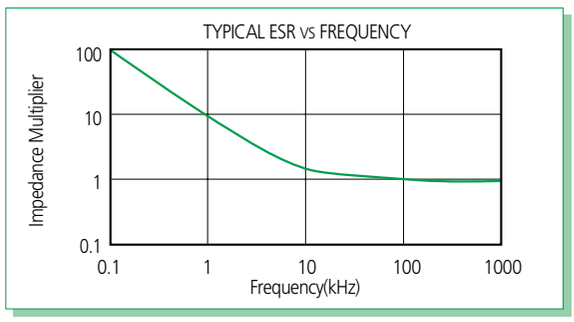

Precautions in using Tantalum Capacitors
4 Characteristics Explanation
SCN Series
SCS Series
SCS-P Series
SCM Series
SCF Series
SCE Series
SCL Series
PCS Series
PCL Series
Marking Specification
Taping Specification

Manganese Dioxide Type

Feature

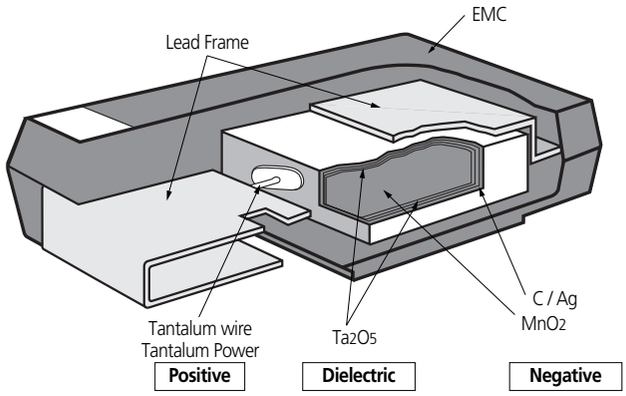

Configuration And Dimension

Normal type

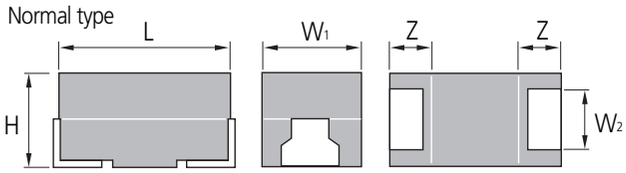

Face - down type

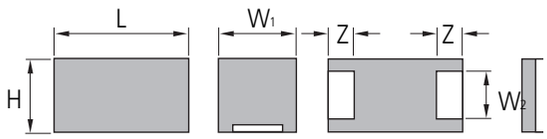

Unit : mm

Case Code	EIA Code	L	W_1	W_2	H	Z
U *	1005	1.0±0.2	0.5±0.2	0.4±0.05	0.60 max	0.25±0.1
I*	1005	1.0±0.2	0.5±0.2	0.4±0.05	0.55 max	0.25±0.1
J	1608 -10	1.6+0.15 -0.1	0.85+0.15 -0.1	0.6±0.1	0.85+0.15 - 0.1	0.4±0.1
K*	1608 -9	1.6±0.1	0.85±0.1	0.6±0.1	0.8±0.1	0.4±0.1
K	1608 -9	1.6+0.15 -0.1	0.85+0.15 -0.1	0.6±0.1	0.90max	0.4±0.1
R	2012L	2.0±0.2	1.25±0.2	0.9±0.1	0.95 max	0.5±0.2
P	2012	2.0±0.2	1.25±0.2	0.9±0.1	1.1±0.1	0.45±0.1
P*	2012	2.0±0.2	1.25±0.2	0.9±0.1	1.2 max	0.5±0.2
S	3216L	3.2±0.3	1.6±0.2	1.2±0.1	1.1±0.1	0.8±0.3
A	3216	3.2±0.2	1.6±0.2	1.2±0.1	1.6±0.2	0.8±0.3
T	3528L	3.5±0.2	2.8±0.2	2.2±0.1	1.2 max	0.8±0.3
B	3528	3.5±0.2	2.8±0.2	2.2±0.1	1.9±0.2	0.8±0.3
C	6032	6.0±0.3	3.2±0.3	2.2±0.1	2.5±0.3	1.3±0.3
D	7343	7.3±0.3	4.3±0.3	2.4±0.1	2.8±0.3	1.3±0.3

Case Code *(Face-down type)

Part Number Code

TC SCE 0J 107 M D A R 0150

- **Tantalum Capacitor**
- **Type of series**
- **Rated Voltage Code**
- **Capacitance Code**
- **Capacitance Tolerance Code**
- **Case Size Code**
- **Packing Code**
  (A=7 inches, C=13 inches)
- **Packing Polarity Code**
- **Maximum ESR in Milliohms**

chanhvinh.com

Manganese Dioxide Type Series System Diagram

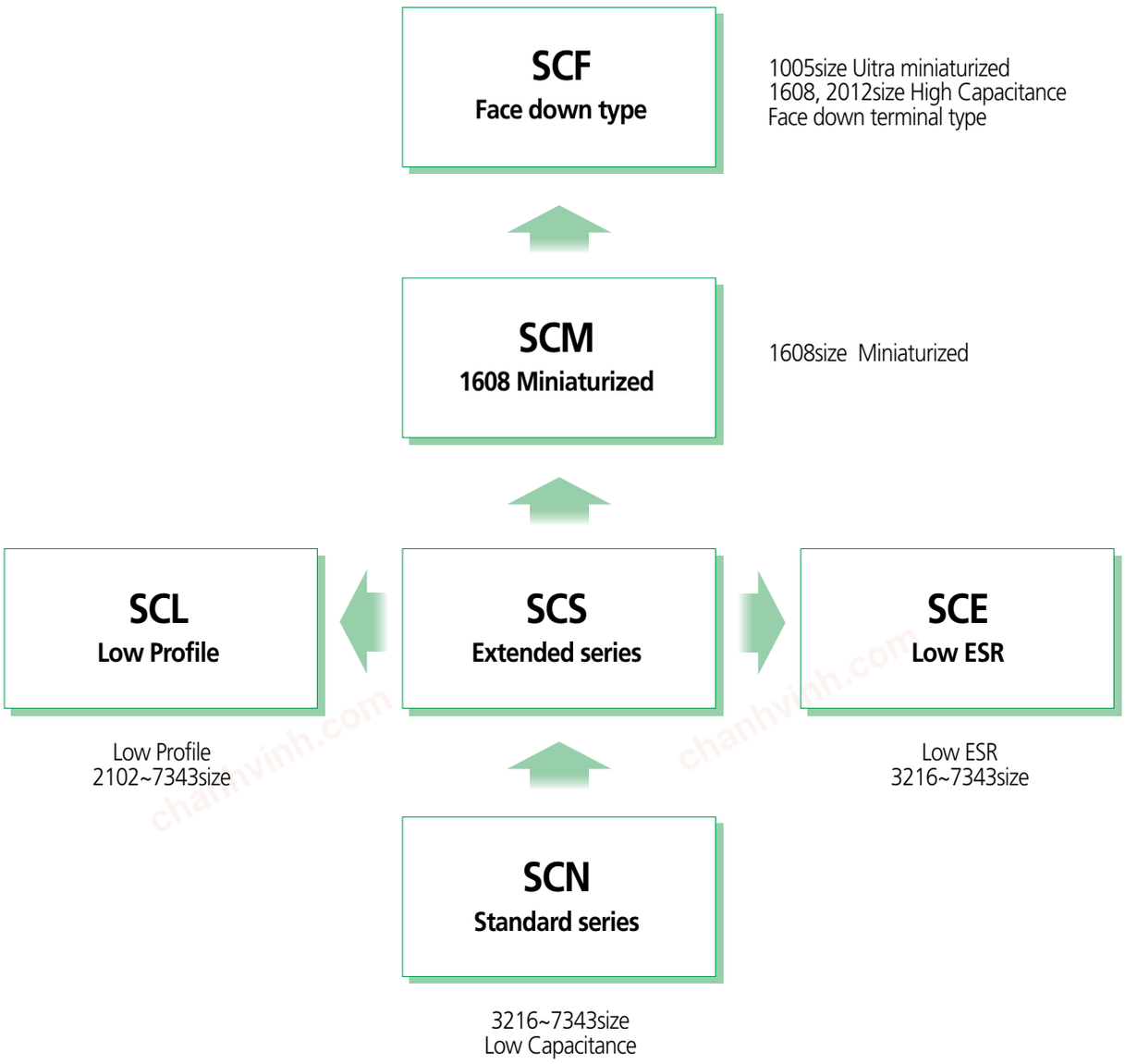

Precautions in using Tantalum Capacitors
4 Characteristics Explanation
SCN Series
SCS Series
SCS-P Series
SCM Series
SCF Series
SCE Series
SCL Series
PCS Series
PCL Series
Marking Specification
Taping Specification

SCN
(Standard Tantalum Chip Capacitors)



Feature

The product is a standard type that has been most widely used among tantalum chip capacitors.

- Molded case available in four case codes.
- Compatible with automatic pick and place equipment.
- Meets or exceeds EIA standard 535BAAC.
- Environment-Friendly(Pb-free) tantalum capacitor.

Specifications

Capacitance	Range	0.15㎌ to 68㎌						
	Tolerance	±20%(M), ±10%(K)						
Dissipation Factor (Tan δ)	C≤1.0㎌	D.F≤4.0%						
	1.5㎌≤C≤6.8㎌	D.F≤6.0%						
	10㎌≤C≤68㎌	D.F≤8.0%						
	C≥100㎌	D.F≤10.0%						
Leakage Current		between 0.01CV and 0.5㎂, whichever is larger						
Rated Voltage(VR)	T≤85℃	4.0	6.3	10	16.0	20.0	25.0	35.0
Category Voltage	85℃<T≤125℃	2.5	4.0	6.3	10.0	13.0	16.0	22.0
Surge Voltage(V)	T≤85℃	5.2	8.0	13.0	20.0	25.0	32.0	44.0
	85℃<T≤125℃	3.2	5.0	8.0	13.0	16.0	20.0	28.0
Operating Temperature		-55℃ to 125℃						

Standard Value and Case Size

Cap.(㎌) \ R.V		4V(0G)	6.3V(0J)	10V(1A)	16V(1C)	20V(1D)	25V(1E)	35V(1V)
0.15	154							A
0.22	224							A
0.33	334						A	A
0.47	474					A	A	B
0.68	684				A	A		
1.0	105			A	A			B
1.5	155		A	A			B	
2.2	225	A	A			B		C
3.3	335	A			B	C	C	C
4.7	475			B	C	C	C	D
6.8	685		B	C	C	C	D	D
10	106	B	C	C	C	D	D	
15	156	C	C	C	D	D		
22	226	C	C	D	D			
33	336	C	D	D				
47	476	D	D					
68	686	D						

chanhvinh.com

Ratings & Part Number Reference

Part Number	Case Size	Capacitance (μF)	DC Leakage (μA)@+25℃Max.	DF (%)@+25℃ 120Hz Max.	ESR (Ω)@+25℃ 100KHz Max.
4 volt Rating@+85℃(2.5 volt Rating@+125℃)					
TCSCN0G225*AAR	A	2.2	0.5	6	10.0
TCSCN0G335*AAR	A	3.3	0.5	6	8.0
TCSCN0G106*BAR	B	10	0.5	6	3.5
TCSCN0G156*CAR	C	15	0.6	6	2.5
TCSCN0G226*CAR	C	22	0.9	6	1.8
TCSCN0G336*CAR	C	33	1.3	6	1.8
TCSCN0G476*DAR	D	47	1.9	6	1.0
TCSCN0G686*DAR	D	68	2.7	6	0.8
6.3 volt Rating@+85℃(4 volt Rating@+125℃)					
TCSCN0J155*AAR	A	1.5	0.5	6	10.0
TCSCN0J225*AAR	A	2.2	0.5	6	8.0
TCSCN0J685*BAR	B	6.8	0.5	6	3.5
TCSCN0J106*CAR	C	10	0.6	6	3.0
TCSCN0J156*CAR	C	15	0.9	6	1.8
TCSCN0J226*CAR	C	22	1.4	6	1.8
TCSCN0J336*DAR	D	33	2.0	6	1.5
TCSCN0J476*DAR	D	47	3.0	6	0.8
10 volt Rating@+85℃(6.3 volt Rating@+125℃)					
TCSCN1A105*AAR	A	1.0	0.5	4	12.0
TCSCN1A155*AAR	A	1.5	0.5	6	8.0
TCSCN1A475*BAR	B	4.7	0.5	6	3.5
TCSCN1A685*CAR	C	6.8	0.7	6	3.0
TCSCN1A106*CAR	C	10	1.0	6	1.8
TCSCN1A156*CAR	C	15	1.5	6	1.8
TCSCN1A226*DAR	D	22	2.2	6	1.2
TCSCN1A336*DAR	D	33	3.3	6	0.8
16 volt Rating@+85℃(10 volt Rating@+125℃)					
TCSCN1C684*AAR	A	0.68	0.5	4	12.0
TCSCN1C105*AAR	A	1.0	0.5	4	10.0
TCSCN1C335*BAR	B	3.3	0.5	6	3.5
TCSCN1C475*CAR	C	4.7	0.7	6	3.0
TCSCN1C685*CAR	C	6.8	1.0	6	1.9
TCSCN1C106*CAR	C	10	1.6	6	1.8
TCSCN1C156*DAR	D	15	2.4	6	1.2
TCSCN1C226*DAR	D	22	3.5	6	0.8
20 volt Rating@+85℃(13 volt Rating@+125℃)					
TCSCN1D474*AAR	A	0.47	0.5	4	15.0
TCSCN1D684*AAR	A	0.68	0.5	4	12.0
TCSCN1D225*BAR	B	2.2	0.5	6	3.5
TCSCN1D335*CAR	C	3.3	0.7	6	3.5
TCSCN1D475*CAR	C	4.7	1.0	6	2.4
TCSCN1D685*CAR	C	6.8	1.4	6	1.9
TCSCN1D106*DAR	D	10	2.0	6	1.3
TCSCN1D156*DAR	D	15	3.0	6	1.0

Precautions in using Tantalum Capacitors
4 Characteristics Explanation
SCN Series
SCS Series
SCS-P Series
SCM Series
SCF Series
SCE Series
SCL Series
PCS Series
PCL Series
Marking Specification
Taping Specification

chanhvinh.com

Part Number	Case Size	Capacitance (μF)	DC Leakage (μA)@+25℃Max.	DF (%)@+25℃ 120Hz Max.	ESR (Ω)@+25℃ 100KHz Max.
25 volt Rating@+85℃(16 volt Rating@+125℃)					
TCSCN1E334*AAR	A	0.33	0.5	4	15.0
TCSCN1E474*AAR	A	0.47	0.5	4	14.0
TCSCN1E155*BAR	B	1.5	0.5	6	5.0
TCSCN1E335*CAR	C	3.3	0.8	6	2.5
TCSCN1E475*CAR	C	4.7	1.2	6	2.4
TCSCN1E685*DAR	D	6.8	1.7	6	1.4
TCSCN1E106*DAR	D	10	2.5	6	1.0
35 volt Rating@+85℃(22 volt Rating@+125℃)					
TCSCN1V154*AAR	A	0.15	0.5	4	19.0
TCSCN1V224*AAR	A	0.22	0.5	4	18.0
TCSCN1V334*AAR	A	0.33	0.5	4	15.0
TCSCN1V474*BAR	B	0.47	0.5	4	8.0
TCSCN1V105*BAR	B	1.0	0.5	4	5.0
TCSCN1V225*CAR	C	2.2	0.7	6	3.5
TCSCN1V335*CAR	C	3.3	1.2	6	2.5
TCSCN1V475*DAR	D	4.7	1.6	6	1.5
TCSCN1V685*DAR	D	6.8	2.3	6	1.3

All technical data relates to an ambient temperature of +25℃.
Capacitance and DF are measured at 120Hz, 0.5V RMS with a maximum DC bias of 2.0 volts.
DCL is measured at rated voltage after 5 minutes.
* Insert K for ±10% tolerance and M for ±20%.

SCS
(Miniaturized Tantalum Chip Capacitors)



Feature

Miniaturized tantalum chip capacitors with extened capacitance.
(Reduced size 1/2 to 1/3 in comparison with SCN.)

- Molded case available in four case codes.
- New low profile size.
- Compatible with automatic pick and place equipment.
- Meets or exceeds EIA standard 535BAAC.
- Environment-Friendly(Pb-free) tantalum capacitor.

Specifications

Capacitance	Range	0.47㎌ to 680㎌						
	Tolerance	±20%(M), ±10%(K)						
Dissipation Factor (Tan δ)		Refer to Specification						
Leakage Current		Refer to Specification						
Rated Voltage(VR)	T≤85℃	2.5	6.3	10.0	16.0	20.0	25.0	35.0
Category Voltage(V)	85℃<T≤125℃	1.6	4.0	6.3	10.0	13.0	16.0	22.0
Surge Voltage(V)	T≤85℃	3.1	8.0	13.0	20.0	25.0	32.0	44.0
	85℃<T≤125℃	2	5.0	8.0	13.0	16.0	20.0	28.0
Operating Temperature		-55℃ to 125℃						

Standard Value and Case Size

Cap.(㎌) \ R . V	2.5V(0E)	4V(0G)	6.3V(0J)	10V(1A)	16V(1C)	20V(1D)	25V(1E)	35V(1V)
0.15	154							
0.22	224							
0.33	334							
0.47	474							A
0.68	684						A	A
1.0	105					A	A	A
1.5	155				A	A	A	A, B
2.2	225			A	A	A	A, B	B
3.3	335		A	A	A	A, B	A, B	B
4.7	475	A	A	A	A, B	A, B	B	C
6.8	685	A	A	A, B	A, B	B	B, C	C
10	106	A	A, B	A, B	A, B	B, C	B, C	C, D
15	156	A, B	A, B	A, B	B, C	C	C, D	C, D
22	226	A, B	A, B	A, B, C	B, C	B, C, D	C, D	D
33	336	A, B	A, B, C	A, B, C	B, C, D	C, D	D	D
47	476	A, B, C	A, B, C	A, B, C, D	C, D	D		
68	686	B, C	B, C, D	C, D	C, D	D		
100	107	A, B, C, D	B, C, D	C, D	D	D		
150	157	C, D	C, D	D				
220	227	B, C, D	C, D	D				
330	337	D	D					
470	477	D	D					
680	687							

Precautions in using Tantalum Capacitors
4 Characteristics Explanation
SCN Series
SCS Series
SCS-P Series
SCM Series
SCF Series
SCE Series
SCL Series
PCS Series
PCL Series
Marking Specification
Taping Specification

chanhvinh.com

SAMSUNG ELECTRO-MECHANICS

Ratings & Part Number Reference

Part Number	Case Size	Capacitance (μF)	DC Leakage (μA)@+25℃Max.	DF (%)@+25℃ 120Hz Max.	ESR (Ω)@+25℃ 100KHz Max.
2.5 volt Rating@+85℃(1.6 volt Rating@+125℃)					
TCSCS0E227*BAR	B	220	5.5	18	1.2
4 volt Rating@+85℃(2.5 volt Rating@+125℃)					
TCSCS0G475*AAR	A	4.7	0.5	8	8.0
TCSCS0G685*AAR	A	6.8	0.5	8	6.0
TCSCS0G106*AAR	A	10	0.5	8	6.0
TCSCS0G156*AAR	A	15	0.6	8	4.0
TCSCS0G156*BAR	B	15	0.6	8	3.5
TCSCS0G226*AAR	A	22	0.9	8	4.0
TCSCS0G226*BAR	B	22	0.9	8	3.5
TCSCS0G336*AAR	A	33	1.3	8	4.0
TCSCS0G336*BAR	B	33	1.3	8	3.5
TCSCS0G476*AAR	A	47	1.9	8	2.0
TCSCS0G476*BAR	B	47	1.9	8	3.5
TCSCS0G476*CAR	C	47	1.9	8	1.8
TCSCS0G686*BAR	B	68	2.7	8	1.8
TCSCS0G686*CAR	C	68	2.7	8	1.6
TCSCS0G107*AAR	A	100	4.0	30	2.0
TCSCS0G107*BAR	B	100	4.0	8	0.8
TCSCS0G107*CAR	C	100	4.0	8	1.6
TCSCS0G107*DAR	D	100	4.0	8	0.8
TCSCS0G157*CAR	C	150	6.0	8	1.2
TCSCS0G157*DAR	D	150	6.0	8	0.8
TCSCS0G227MBAR	B	220	8.8	18	0.5
TCSCS0G227*CAR	C	220	8.8	8	0.6
TCSCS0G227*DAR	D	220	8.8	8	0.9
TCSCS0G337*DAR	D	330	13.2	8	0.7
TCSCS0G477*DAR	D	470	18.8	10	0.6
6.3 volt Rating@+85℃(4 volt Rating@+125℃)					
TCSCS0J335*AAR	A	3.3	0.5	8	8.0
TCSCS0J475*AAR	A	4.7	0.5	8	6.0
TCSCS0J685*AAR	A	6.8	0.5	8	6.0
TCSCS0J106*AAR	A	10	0.6	8	4.0
TCSCS0J106*BAR	B	10	0.6	8	3.5
TCSCS0J156*AAR	A	15	0.9	8	4.0
TCSCS0J156*BAR	B	15	0.9	8	3.5
TCSCS0J226*AAR	A	22	1.4	8	2.0
TCSCS0J226*BAR	B	22	1.4	8	3.5
TCSCS0J336*AAR	A	33	2	6	2.0
TCSCS0J336*BAR	B	33	2	8	3.0
TCSCS0J336*CAR	C	33	2	8	1.8
TCSCS0J476*AAR	A	47	3	12	2.0
TCSCS0J476*BAR	B	47	3	8	1.3
TCSCS0J476*CAR	C	47	3	8	1.6
TCSCS0J686*BAR	B	68	4.3	8	3.5
TCSCS0J686*CAR	C	68	4.3	8	1.2
TCSCS0J686*DAR	D	68	4.3	8	0.8
TCSCS0J107*BAR	B	100	6.3	10	0.8
TCSCS0J107*CAR	C	100	6.3	8	0.8
TCSCS0J107*DAR	D	100	6.3	8	0.8
TCSCS0J157*CAR	C	150	9.5	8	1.3
TCSCS0J157*DAR	D	150	9.5	8	0.9
TCSCS0J227*CAR	C	220	13.9	8	0.6
TCSCS0J227*DAR	D	220	13.9	8	0.7
TCSCS0J337*DAR	D	330	20.8	8	0.5
TCSCS0J477*DAR	D	470	29.6	10	0.3

chanhvinh.com

Part Number	Case Size	Capacitance (μF)	DC Leakage (μA)@+25℃Max.	DF (%)@+25℃ 120Hz Max.	ESR (Ω)@+25℃ 100KHz Max.
10 volt Rating@+85℃(6.3 volt Rating@+125℃)					
TCSCS1A225*AAR	A	2.2	0.5	8	8.0
TCSCS1A335*AAR	A	3.3	0.5	8	6.0
TCSCS1A475*AAR	A	4.7	0.5	8	6.0
TCSCS1A685*AAR	A	6.8	0.7	8	6.0
TCSCS1A685*BAR	B	6.8	0.7	8	3.5
TCSCS1A106*AAR	A	10	1	8	2.0
TCSCS1A106*BAR	B	10	1	8	3.5
TCSCS1A156*AAR	A	15	1.5	8	4.0
TCSCS1A156*BAR	B	15	1.5	8	3.5
TCSCS1A226*AAR	A	22	2.2	8	2.0
TCSCS1A226*BAR	B	22	2.2	8	3.0
TCSCS1A226*CAR	C	22	2.2	8	1.8
TCSCS1A336*AAR	A	33	3.3	12	2.0
TCSCS1A336*BAR	B	33	3.3	8	1.8
TCSCS1A336*CAR	C	33	3.3	8	1.6
TCSCS1A476MAAR	A	47	9.4	20	3.0
TCSCS1A476*BAR	B	47	4.7	8	1.6
TCSCS1A476*CAR	C	47	4.7	8	1.2
TCSCS1A476*DAR	D	47	4.7	8	0.8
TCSCS1A686*CAR	C	68	6.8	8	0.9
TCSCS1A686*DAR	D	68	6.8	8	0.8
TCSCS1A107*CAR	C	100	10	8	1.2
TCSCS1A107*DAR	D	100	10	8	0.7
TCSCS1A157*DAR	D	150	15	8	0.8
TCSCS1A227*DAR	D	220	22	8	0.4
16 volt Rating@+85℃(10 volt Rating@+125℃)					
TCSCS1C155*AAR	A	1.5	0.5	8	8.0
TCSCS1C225*AAR	A	2.2	0.5	8	6.0
TCSCS1C335*AAR	A	3.3	0.5	8	6.0
TCSCS1C475*AAR	A	4.7	0.7	8	4.0
TCSCS1C475*BAR	B	4.7	0.7	8	3.5
TCSCS1C685*AAR	A	6.8	1.0	8	3.5
TCSCS1C685*BAR	B	6.8	1.0	8	3.5
TCSCS1C106*AAR	A	10	1.6	8	3.0
TCSCS1C106*BAR	B	10	1.6	8	3.5
TCSCS1C156*BAR	B	15	2.4	8	3.0
TCSCS1C156*CAR	C	15	2.4	8	1.8
TCSCS1C226*BAR	B	22	3.5	8	2.3
TCSCS1C226*CAR	C	22	3.5	8	1.6
TCSCS1C336*BAR	B	33	5.3	8	1.4
TCSCS1C336*CAR	C	33	5.3	8	1.5
TCSCS1C336*DAR	D	33	5.3	8	0.8
TCSCS1C476*CAR	C	47	7.5	8	1.4
TCSCS1C476*DAR	D	47	7.5	8	0.8
TCSCS1C686*CAR	C	68	10.9	8	1.4
TCSCS1C686*DAR	D	68	10.9	8	0.8
TCSCS1C107*DAR	D	100	16	8	0.7

Precautions in using Tantalum Capacitors
4 Characteristics Explanation
SCN Series
SCS Series
SCS-P Series
SCM Series
SCF Series
SCE Series
SCL Series
PCS Series
PCL Series
Marking Specification
Taping Specification

chanhvinh.com

Part Number	Case Size	Capacitance (μF)	DC Leakage (μA)@+25℃ Max.	DF (%)@+25℃ 120Hz Max.	ESR (Ω)@+25℃ 100KHz Max.
20 volt Rating@+85℃(13 volt Rating@+125℃)					
TCSCS1D105*AAR	A	1.0	0.5	6	10.0
TCSCS1D155*AAR	A	1.5	0.5	8	8.0
TCSCS1D225*AAR	A	2.2	0.5	8	7.0
TCSCS1D335*AAR	A	3.3	0.7	8	4.0
TCSCS1D335*BAR	B	3.3	0.7	8	3.5
TCSCS1D475*AAR	A	4.7	1.0	8	3.5
TCSCS1D475*BAR	B	4.7	1.0	8	3.5
TCSCS1D685*BAR	B	6.8	1.4	8	3.5
TCSCS1D106*BAR	B	10	2.0	8	3.0
TCSCS1D106*CAR	C	10	2.0	8	1.8
TCSCS1D156*CAR	C	15	3.0	8	1.7
TCSCS1D226*BAR	B	22	4.4	6	1.8
TCSCS1D226*CAR	C	22	4.4	8	1.6
TCSCS1D226*DAR	D	22	4.4	8	0.8
TCSCS1D336*CAR	C	33	6.6	8	1.2
TCSCS1D336*DAR	D	33	6.6	8	0.8
TCSCS1D476*DAR	D	47	9.4	8	0.7
TCSCS1D686*DAR	D	68	13.6	8	0.7
TCSCS1D107*DAR	D	100	20.0	8	0.9
25 volt Rating@+85℃(16 volt Rating@+125℃)					
TCSCS1E684*AAR	A	0.68	0.5	6	10.0
TCSCS1E105*AAR	A	1.0	0.5	6	8.0
TCSCS1E155*AAR	A	1.5	0.5	8	8.0
TCSCS1E225*AAR	A	2.2	0.6	8	6.0
TCSCS1E225*BAR	B	2.2	0.6	8	4.5
TCSCS1E335*AAR	A	3.3	0.8	6	3.7
TCSCS1E335*BAR	B	3.3	0.8	8	3.5
TCSCS1E475*BAR	B	4.7	1.2	8	3.0
TCSCS1E685*BAR	B	6.8	1.7	8	2.8
TCSCS1E685*CAR	C	6.8	1.7	8	1.9
TCSCS1E106*BAR	B	10	2.5	8	1.8
TCSCS1E106*CAR	C	10	2.5	8	1.5
TCSCS1E156*CAR	C	15	3.7	8	1.5
TCSCS1E156*DAR	D	15	3.7	8	1.0
TCSCS1E226*CAR	C	22	5.5	8	1.2
TCSCS1E226*DAR	D	22	5.5	8	0.8
TCSCS1E336*DAR	D	33	8.2	8	0.7
35 volt Rating@+85℃(22 volt Rating@+125℃)					
TCSCS1V474*AAR	A	0.47	0.5	6	12.0
TCSCS1V684*AAR	A	0.68	0.5	6	10.0
TCSCS1V105*AAR	A	1.0	0.5	6	7.5
TCSCS1V155*AAR	A	1.5	0.5	8	7.5
TCSCS1V155*BAR	B	1.5	0.5	8	5.0
TCSCS1V225*BAR	B	2.2	0.7	8	4.2
TCSCS1V335*BAR	B	3.3	1.2	8	3.5
TCSCS1V475*CAR	C	4.7	1.6	8	2.5
TCSCS1V685*CAR	C	6.8	2.3	8	2.0
TCSCS1V106*CAR	C	10	3.5	8	1.6
TCSCS1V106*DAR	D	10	3.5	8	1.0
TCSCS1V156*CAR	C	15	5.3	8	1.4
TCSCS1V156*DAR	D	15	5.2	8	0.8
TCSCS1V226*DAR	D	22	7.7	8	0.9
TCSCS1V336MDAR	D	33	11.5	6	0.9

All technical data relates to an ambient temperature of +25℃.
Capacitance and DF are measured at 120Hz, 0.5V RMS with a maximum DC bias of 2.0 volts.
DCL is measured at rated voltage after 5 minutes.
* Insert K for ±10% tolerance and M for ±20%.

SCS-P CASE
(2012 Size Tantalum Chip Capacitors)



Feature

Reduced to about 1/3 the cubic volume of the SCN.

- New low profile case size.
  (0805 size tantalum chip capacitors)
- Compatible with automatic pick and place equipment.
- Meets or exceeds EIA standard 535BAAC.

Precautions in using Tantalum Capacitors
4 Characteristics Explanation
SCN Series
SCS Series
SCS-P Series
SCM Series
SCF Series
SCE Series
SCL Series
PCS Series
PCL Series
Marking Specification
Taping Specification

Specifications

Capacitance	Range	0.22㎌ to 22㎌						
	Tolerance	±20%(M), ±10%(K)						
Dissipation Factor (Tan δ)		Refer to Specification						
Leakage Current		between 0.01CV and 0.5㎂, whichever is larger						
Rated Voltage(VR)	T≤85℃	4.0	6.3	10.0	16.0	20.0	25.0	35.0
Category Voltage(V)	85℃＜T≤125℃	2.5	4.0	6.3	10.0	13.0	16.0	22.0
Surge Voltage(V)	T≤85℃	5.2	8.0	13.0	20.0	25.0	32.0	44.0
	85℃＜T≤125℃	3.2	5.0	8.0	13.0	16.0	20.0	28.0
Operating Temperature		-55℃ to 125℃						

Standard value and case size

Cap.(㎌) \ R.V	4V(0G)	6.3V(0J)	10V(1A)	16V(1C)	20V(1D)
0.22 (224)	P	P	P	P	
0.33 (334)					
0.47 (474)	P	P	P	P	P
0.68 (684)	P	P	P	P	P
1.0 (105)	P	P	P	P	
1.5 (155)					
2.2 (225)	P	P	P	P	
3.3 (335)	P	P	P		
4.7 (475)	P	P	P		
6.8 (685)	P	P			
10 (106)	P	P	P		
15 (156)					
22 (226)	P	P			
33 (336)		P			
47 (476)					
100 (107)					

chanhvinh.com

Ratings & Part Number Reference

Part Number	Case Size	Capacitance (μF)	DC Leakage (μA)@+25℃Max.	DF (%)@+25℃ 120Hz Max.	ESR (Ω)@+25℃ 100KHz Max.
4 volt Rating@+85℃(2.5 volt Rating@+125℃)					
TCSCS0G224*PAR	P	0.22	0.5	4	25
TCSCS0G474*PAR	P	0.47	0.5	4	25
TCSCS0G684*PAR	P	0.68	0.5	4	20
TCSCS0G105*PAR	P	1	0.5	6	20
TCSCS0G225*PAR	P	2.2	0.5	6	15
TCSCS0G335*PAR	P	3.3	0.5	6	8
TCSCS0G475*PAR	P	4.7	0.5	8	9
TCSCS0G685*PAR	P	6.8	0.5	6	8
TCSCS0G106*PAR	P	10	0.5	8	6
TCSCS0G226*PAR	P	22	0.9	8	3
6.3 volt Rating@+85℃(4 volt Rating@+125℃)					
TCSCS0J224*PAR	P	0.22	0.5	4	25
TCSCS0J474*PAR	P	0.47	0.5	4	25
TCSCS0J684*PAR	P	0.68	0.5	4	20
TCSCS0J105*PAR	P	1	0.5	6	20
TCSCS0J225*PAR	P	2.2	0.5	6	15
TCSCS0J335*PAR	P	3.3	0.5	6	8
TCSCS0J475*PAR	P	4.7	0.5	8	9
TCSCS0J685*PAR	P	6.8	0.5	6	8
TCSCS0J106*PAR	P	10	0.6	8	5
TCSCS0J226MPAR	P	22	1.4	8	4
TCSCS0J336MPAR	P	33	2.1	18	2
10 volt Rating@+85℃(6.3 volt Rating@+125℃)					
TCSCS1A224*PAR	P	0.22	0.5	4	25
TCSCS1A474*PAR	P	0.47	0.5	4	25
TCSCS1A684*PAR	P	0.68	0.5	4	20
TCSCS1A105*PAR	P	1	0.5	6	20
TCSCS1A225*PAR	P	2.2	0.5	6	15
TCSCS1A335*PAR	P	3.3	0.5	6	8
TCSCS1A475*PAR	P	4.7	0.5	8	4
TCSCS1A106*PAR	P	10	1.0	8	6
16 volt Rating@+85℃(10 volt Rating@+125℃)					
TCSCS1C224*PAR	P	0.22	0.5	6	25
TCSCS1C474*PAR	P	0.47	0.5	6	25
TCSCS1C684*PAR	P	0.68	0.5	6	20
TCSCS1C105*PAR	P	1.0	0.5	6	20
TCSCS1C225*PAR	P	2.2	0.5	6	6.5
20 volt Rating@+85℃(13 volt Rating@+125℃)					
TCSCS1D474*PAR	P	0.47	0.5	4	25
TCSCS1D684*PAR	P	0.68	0.5	4	20

All technical data relates to an ambient temperature of +25℃.
Capacitance and DF are measured at 120Hz, 0.5V RMS with a maximum DC bias of 2.0 volts.
DCL is measured at rated voltage after 5 minutes.
* Insert K for ±10% tolerance and M for ±20%.

SCM
(Ultra-Miniaturization(1608) Tantalum Chip Capacitors)



Feature

Reduced to about 40% the cubic volume of P Case.

- New low profile case size.
- Compatible with automatic pick and place equipment.
- Meets or Exceeds EIA standard 535BAAC.
- Environment-Friendly(Pb-free) tantalum capacitor.

Specifications

Capacitance	Range	1.0㎌ to 10㎌						
	Tolerance	±20%(M)						
Dissipation Factor (Tan δ)		Refer to Specification						
Leakage Current		between 0.01CV and 0.5㎂, whichever is larger						
Rated Voltage(VR)	T≤85℃	4.0	6.3	10.0	16.0	20.0	25.0	35.0
Category Voltage(V)	85℃＜T≤125℃	2.5	4.0	6.3	10.0	13.0	16.0	22.0
Surge Voltage(V)	T≤85℃	5.2	8.0	13.0	20.0	25.0	32.0	44.0
	85℃＜T≤125℃	3.2	5.0	8.0	13.0	16.0	20.0	28.0
Operating Temperature		-55℃ to 125℃						

Standard Value and Case Size

Cap.(㎌) \ R.V		4V(0G)	6.3V(0J)	10V(1A)	16V(1C)	20V(1D)	25V(1E)
1.0	105	J	J	J	J, K		
1.5	155						
2.2	225	J	J	J	J		
3.3	335						
4.7	475	J	J, K	J			
6.8	685	J	J				
10	106	J , K	J	J			
15	156						
22	226						

Precautions in using Tantalum Capacitors
4 Characteristics Explanation
SCN Series
SCS Series
SCS-P Series
SCM Series
SCF Series
SCE Series
SCL Series
PCS Series
PCL Series
Marking Specification
Taping Specification

chanhvinh.com

Ratings & Part Number Reference

Part Number	Case Size	Capacitance (μF)	DC Leakage (μA)@+25℃Max.	DF (%)@+25℃ 120Hz Max.	ESR (Ω)@+25℃ Max.
4 volt Rating@+85℃(2.5 volt Rating@+125℃)					
TCSCM0G105MJAR	J	1.0	0.5	8.0	15
TCSCM0G225MJAR	J	2.2	0.5	8.0	10
TCSCM0G475MJAR	J	4.7	0.5	8.0	10
TCSCM0G685MJAR	J	6.8	0.5	8.0	6
TCSCM0G106MJAR	J	10	0.5	8.0	6
TCSCM0G106MKAR	K	10	0.5	20.0	6
6.3 volt Rating@+85℃(4 volt Rating@+125℃)					
TCSCM0J105MJAR	J	1.0	0.5	8.0	15
TCSCM0J225MJAR	J	2.2	0.5	8.0	10
TCSCM0J475MJAR	J	4.7	0.5	8.0	10
TCSCM0J475MKAR	K	4.7	0.5	20.0	8
TCSCM0J685MJAR	J	6.8	0.5	8.0	6
TCSCM0J106MJAR	J	10	0.63	8.0	4
10 volt Rating@+85℃(6.3 volt Rating@+125℃)					
TCSCM1A105MJAR	J	1.0	0.5	8.0	10
TCSCM1A225MJAR	J	2.2	0.5	8.0	10
TCSCM1A475MJAR	J	4.7	0.5	8.0	6
TCSCM1A106MJAR	J	10	1	20	7
16 volt Rating@+85℃(10 volt Rating@+125℃)					
TCSCM1C105MJAR	J	1.0	0.5	8.0	15
TCSCM1C105MKAR	K	1.0	0.5	10	25
TCSCM1C225MJAR	J	2.2	0.5	8.0	7.5

All technical data relates to an ambient temperature of +25℃.
Capacitance and DF are measured at 120Hz, 0.5V RMS with a maximum DC bias of 2.0 volts.
DCL is measured at rated voltage after 5 minutes.
Insert M tolerance for ±20%.

SCF
(Face-down Tantalum Chip Capacitor)

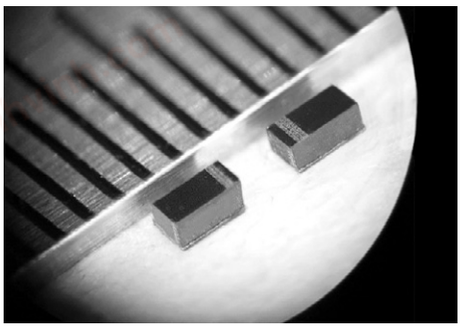

Feature

SCF type is face down type with excellent performance characteristics for filtering, by-passing, coupling, blocking circuits

- Designed for very slim and high capacitance 1005 size
- Molded Case available
- Environmental Friendly Component(Halogen free)

Specifications

Capacitance	Range	1.0㎌ to 47㎌						
	Tolerance	±20%(M)						
Dissipation Factor (Tan δ)		Refer to Specification						
Leakage Current		Refer to Specification						
Rated Voltage(VR)	T≤85℃	4.0	6.3	10.0	16.0	20.0	25.0	35.0
Category Voltage(V)	85℃＜T≤125℃	2.5	4.0	6.3	10.0	13.0	16.0	22.0
Surge Voltage(V)	T≤85℃	5.2	8.0	13.0	20.0	25.0	32.0	44.0
	85℃＜T≤125℃	3.2	5.0	8.0	13.0	16.0	20.0	28.0
Operating Temperature		-55℃ to 125℃						

Standard Value and Case Size

Cap.(㎌) \ R.V	4V(0G)	6.3V(0J)	10V(1A)	16V(1C)
1 (105)		I		
2.2 (225)		U		
4.7 (475)	U, I	U		
22 (226)		K		
33 (156)			P	
47 (226)		P	P	

( ) : Under Development

Ratings & Part Number Reference

Part Number	Case Size	Capacitance (㎌)	DC Leakage (㎂) @+25℃ Max.	DF(%) @+25℃ 120Hz Max.	ESR(Ω) @+25℃ Max.
4 volt Rating@+85℃(2.5 volt Rating@+125℃)					
TCSCF0G475MIAR	I	4.7	0.5	15	15
TCSCF0G475MUAR	U	4.7	0.5	10.0	15
6.3 volt Rating@+85℃(4 volt Rating@+125℃)					
*TCSCF0J105KIAR	I	1.0	0.5	6.0	15
TCSCF0J225MUAR	U	2.2	0.5	6.0	15
TCSCF0J475MUAR	U	4.7	2.96	15	20
TCSCF0J228MKAR	K	22	1.4	20	6
TCSCF0J476MPAR	P	47	2.96	20	3
10 volt Rating@+85℃(6.3 volt Rating@+125℃)					
TCSCF1A336MPAR	P	33	3.3	20	4
TCSCF1A476MPAR	P	47	23.5	20	3

Insert K for ±10% tolerance and M for ±20%.

Precautions in using Tantalum Capacitors
4 Characteristics Explanation
SCN Series
SCS Series
SCS-P Series
SCM Series
SCF Series
SCE Series
SCL Series
PCS Series
PCL Series
Marking Specification
Taping Specification

chanhvinh.com

SCE
(Low-ESR Tantalum Chip Capacitors)

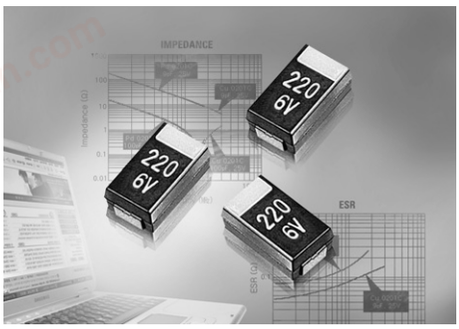

Feature

Designed for very Low ESR.

- Molded case available in four case codes.
- Extended range values.
- Compatible with automatic pick and place equipment.
- Meets or exceeds EIA standard 535BAAC.
- Suitable for high frequency as high speed PC, Switching Regulators, DC/DC converter, and etc.
- Environment-Friendly(Pb-free) tantalum capacitor.

Specifications

Capacitance	Range	1.0㎌ to 470㎌						
	Tolerance	±20%(M), ±10%(K)						
Dissipation Factor (Tan δ)		Refer to Specification						
Leakage Current		between 0.01CV and 0.5㎂, whichever is larger						
Rated Voltage(VR)	T≤85℃	4.0	6.3	10.0	16.0	20.0	25.0	35.0
Category Voltage(V)	85℃＜T≤125℃	2.5	4.0	6.3	10.0	13.0	16.0	22.0
Surge Voltage(V)	T≤85℃	5.2	8.0	13.0	20.0	25.0	32.0	44.0
	85℃＜T≤125℃	3.2	5.0	8.0	13.0	16.0	20.0	28.0
Operating Temperature		-55℃ to 125℃						

Standard Value and Case Size

Cap. \ R.V	4V(0G)	6.3V(0J)	10V(1A)	16V(1C)	20V(1D)	25V(1E)	35V(1V)
1.0 (105)							A(3000)
1.5 (155)						A(3000) B(2000)	
2.2 (225)			A(3000)	A(3500)	A(3000)	B(3000)	B(2000)
3.3 (335)				A(3500)	A(2500)	B(2000)	
4.7 (475)			A(1800)	A(3000) B(2000)		B(1500)	C(1000)
6.8 (685)		A(1800)	A(1800)		B(1000)		
10 (106)		A(1500)	A(1800/2000) B(1000)	B(800/1000) C(600)	C(700)		
15 (156)		A(1500)	A(1500)	B(800)			D(600)
22 (226)		A(1200)	B(700)	C(400/500)		D(300)	D(400)
33 (336)		A(1000) B(600)	B(650) C(500)	C(400) D(400)			
47 (476)		A(1000) B(500)	B(500/650) C(500) D(400)	C(350) D(200)			
68 (686)		B(500)	C(300) D(300)				
100 (107)		B(500) C(300)	C(250) D(100/150)	D(150)			
220 (227)		C(250)	D(150)				
330 (337)							
470 (477)		D(100/200)					

NOTE: The EIA & CECC standards for low ESR Solid Tantalum Capacitors allow an ESR movement to 1.25 times catalogue limit post mounting.

ESR limits quoted in brakets are in milliohms

chanhvinh.com

Ratings & Part Number Reference

Part Number	Case Size	Capacitance (μF)	DC Leakage (μA)@+25℃Max.	DF (%)@+25℃ 120Hz Max.	ESR (Ω)@+25℃ Max.
6.3 volt Rating@+85℃(4 volt Rating@+125℃)					
TCSCE0J685*AAR1800	A	6.8	0.5	8	1.8
TCSCE0J106*AAR1500	A	10	0.6	8	1.5
TCSCE0J156*AAR1500	A	15	1.0	8	1.5
TCSCE0J226*AAR1200	A	22	1.4	8	1.2
TCSCE0J336*AAR1000	A	33	2.1	8	1.0
TCSCE0J476*AAR1000	A	47	3.0	12	1.0
TCSCE0J336*BAR0600	B	33	2.0	8	0.6
TCSCE0J476*BAR0500	B	47	3.0	8	0.5
TCSCE0J686*BAR0500	B	68	4.3	8	0.5
TCSCE0J107*BAR0500	B	100	6.3	8	0.5
TCSCE0J107*CAR0300	C	100	6.3	8	0.3
TCSCE0J227*CAR0250	C	220	13.9	8	0.25
TCSCE0J477*DAR0200	D	470	29.6	10	0.2
TCSCE0J477*DCR0100	D	470		10	1.0
10 volt Rating@+85℃(6.3 volt Rating@+125℃)					
TCSCE1A225*AAR3000	A	2.2	0.5	8	3.0
TCSCE1A475*AAR1800	A	4.7	0.5	8	1.8
TCSCE1A685*AAR1800	A	6.8	0.7	8	1.8
TCSCE1A106*AAR2000	A	10	1.0	8	2.0
TCSCE1A106*AAR1800	A	10	1.0	8	1.8
TCSCE1A106*BAR1000	B	10	1.0	8	1.0
TCSCE1A156*AAR1500	A	15	1.5	8	1.5
TCSCE1A226*BAR0700	B	22	2.2	8	0.7
TCSCE1A336*BAR0650	B	33	3.3	8	0.65
TCSCE1A336*CAR0500	C	33	3.3	8	0.5
TCSCE1A476*BAR0650	B	47	4.7	8	0.65
TCSCE1A476*BAR0500	B	47	4.7	8	0.5
TCSCE1A476*CAR0500	C	47	4.7	8	0.5
TCSCE1A476*DAR0400	D	47	4.7	8	0.4
TCSCE1A686*CAR0300	C	68	6.8	8	0.3
TCSCE1A686*DAR0300	D	68	6.8	8	0.3
TCSCE1A107*CAR0250	C	100	10.0	8	0.25
TCSCE1A107*DAR0150	D	100	6.3	8	0.15
TCSCE1A107*DCR0100	D	100	10.0	8	0.1
TCSCE1A227*DAR0150	D	220	22.0	8	0.15
16 volt Rating@+85℃(10 volt Rating@+125℃)					
TCSCE1C225*AAR3500	A	2.2	0.5	8	3.5
TCSCE1C335*AAR3500	A	3.3	0.5	8	3.5
TCSCE1C475*AAR3000	A	4.7	0.8	8	3.0
TCSCE1C475*BAR2000	B	4.7	0.8	8	2.0
TCSCE1C106*BAR1000	B	10	1.6	8	1.0
TCSCE1C106*BAR0800	B	10	1.6	8	0.8
TCSCE1C106*CAR0600	C	10	1.6	8	0.6
TCSCE1C156*BAR0800	B	15	2.4	8	0.8
TCSCE1C226*CAR0500	C	22	3.5	8	0.5
TCSCE1C226*CAR0400	C	22	3.5	8	0.4
TCSCE1C336*CAR0400	C	33	5.3	8	0.4
TCSCE1C336*DAR0400	D	33	5.3	8	0.4
TCSCE1C476*CAR0350	C	47	7.5	8	0.35
TCSCE1C476*DAR0200	D	47	7.5	8	0.2
TCSCE1C107*DCR0150	D	100	16	8	0.15

Precautions in using Tantalum Capacitors
4 Characteristics Explanation
SCN Series
SCS Series
SCS-P Series
SCM Series
SCF Series
SCE Series
SCL Series
PCS Series
PCL Series
Marking Specification
Taping Specification

chanhvinh.com

Part Number	Case Size	Capacitance (μF)	DC Leakage (μA)@+25℃Max.	DF (%)@+25℃ 120Hz Max.	ESR (Ω)@+25℃ Max.
20 volt Rating@+85℃(13 volt Rating@+125℃)					
TCSCE1D225*AAR3000	A	2.2	0.5	8	3.0
TCSCE1D335*AAR2500	A	3.3	0.5	8	2.5
TCSCE1D685*BAR1000	B	6.8	1.4	8	1.0
TCSCE1D106*CAR0700	C	10	2.0	8	0.7
25 volt Rating@+85℃(16 volt Rating@+125℃)					
TCSCE1E155*AAR3000	A	1.5	0.5	8	3.0
TCSCE1E155*BAR2000	B	1.5	0.5	8	2.0
TCSCE1E225*BAR3000	B	2.2	0.6	8	3.0
TCSCE1E335*BAR2000	B	3.3	0.8	8	2.0
TCSCE1E475*BAR1500	B	4.7	1.2	8	1.5
TCSCE1E226*DAR0300	D	22	5.5	8	0.3
35 volt Rating@+85℃(22 volt Rating@+125℃)					
TCSCE1V105*AAR3000	A	1.0	0.5	8	3.0
TCSCE1V225*BAR2000	B	2.2	0.7	8	2.0
TCSCE1V475*CAR1000	C	4.7	1.6	8	1.0
TCSCE1V156*DAR0600	D	15	5.3	8	0.6
TCSCE1V226*DAR0400	D	22	7.7	8	0.4

All technical data relates to an ambient temperature of +25℃.
Capacitance and DF are measured at 120Hz, 0.5V RMS with a maximum DC bias of 2.0 volts.
DCL is measured at rated voltage after 5 minutes.
* Insert K for ±10% tolerance and M for ±20%.

SCL
(Low-Profile Tantalum Chip Capacitors)



Feature

- Low -Profile case size
- Reduced thickness up to 64% of SCS series
- Molded Case available in four case codes.
- Compatible with automatic pick and place equipment.
- Meets or Exceeds EIA Standard 535BAAC.
- Terminations: 100 % Sn , RoHS Compliant

Specifications

Capacitance	Range	10㎌ to 100㎌						
	Tolerance	±20%(M)						
Dissipation Factor (Tan δ)		Refer to Specification						
Leakage Current		between 0.01CV and 0.5㎂, whichever is larger						
Rated Voltage(VR)	T≤85℃	4.0	6.3	10.0	16.0	20.0	25.0	35.0
Category Voltage(V)	85℃＜T≤125℃	2.5	4.0	6.3	10.0	13.0	16.0	22.0
Surge Voltage(V)	T≤85℃	5.2	8.0	13.0	20.0	25.0	32.0	44.0
	85℃＜T≤125℃	3.2	5.0	8.0	13.0	16.0	20.0	28.0
Operating Temperature		-55℃ to 125℃						

Standard Value and Case Size

Cap.(㎌) \ R . V		4V(0G)	6.3V(0J)	10V(1A)	16V(1C)	20V(1D)	25V(1E)
10	106			R			
22	226						
33	336	S	S	S			
47	476						
68	686						
100	107						
150	157						

Precautions in using Tantalum Capacitors
4 Characteristics Explanation
SCN Series
SCS Series
SCS-P Series
SCM Series
SCF Series
SCE Series
SCL Series
PCS Series
PCL Series
Marking Specification
Taping Specification

chanhvinh.com

Ratings & Part Number Reference

Part Number	Case Size	Capacitance (μF)	DC Leakage (μA) @+25℃ Max.	DF(%) @+25℃ 120Hz Max.	ESR(Ω) @+25℃ Max.
4 Volt Rating @+85℃ (2.5 Volt Rating @+125℃)					
TCSCL0G336MSAR	S	33	1.32	10	2.0
TCSCL0G107MTAR	T	100	4.00	20	1.3
6.3 Volt Rating @+85℃ (4Volt Rating @+125℃)					
TCSCL0J336MSAR	S	33	2.07	10	2.0
10 Volt Rating @+85℃ (6.3Volt Rating @+125℃)					
TCSCL01A106MRAR	R	10	1.0	8	3.0
TCSCL01A336MSAR	S	33	3.3	10	1.1

Conductive polymer Type

Feature

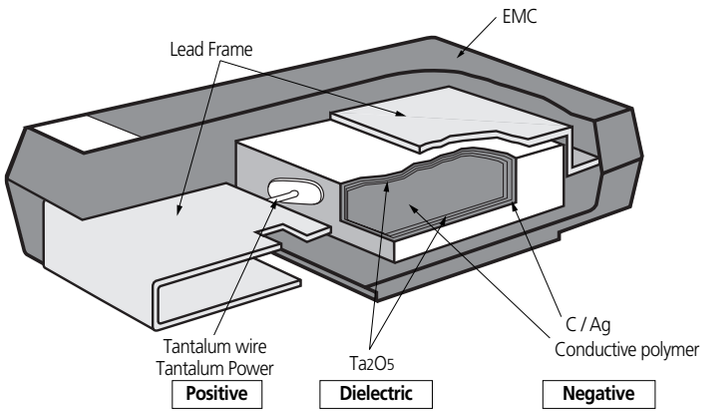

Configuration And Dimension

Normal type

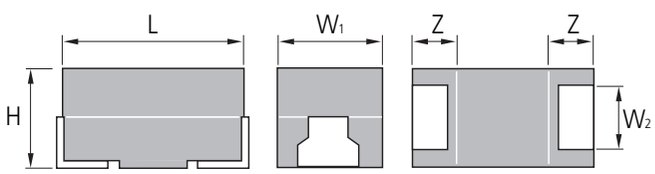

Unit : mm

Case Code	EIA Code	L	W_1	W_2	H	Z
P	2012	2.0±0.2	1.25±0.2	0.9±0.1	1.2 max	0.5±0.2
T	3528L	3.5±0.2	2.8±0.2	2.2±0.1	1.2 max	0.8±0.3
L	3528	3.5±0.2	2.8±0.2	2.2±0.1	1.5 max	0.8±0.3
B	3528	3.5±0.2	2.8±0.2	2.2±0.1	1.9±0.1	0.8±0.3

Part Number Code

TC PCS 0J 157 M B A R 0200

- Tantalum Capacitor
- Type of series
- Rated Voltage Code
- Capacitance Code("157":150)
- Capacitance Tolerance Code("M":20%)
- Case Size Code
- Packing Code
- Packing Polarity Code
- Maximum ESR in Milliohms

Precautions in using Tantalum Capacitors
4 Characteristics Explanation
SCN Series
SCS Series
SCS-P Series
SCM Series
SCF Series
SCE Series
SCL Series
PCS Series
PCL Series
Marking Specification
Taping Specification

chanhvinh.com

Conductive Polymer Type Series System Diagram

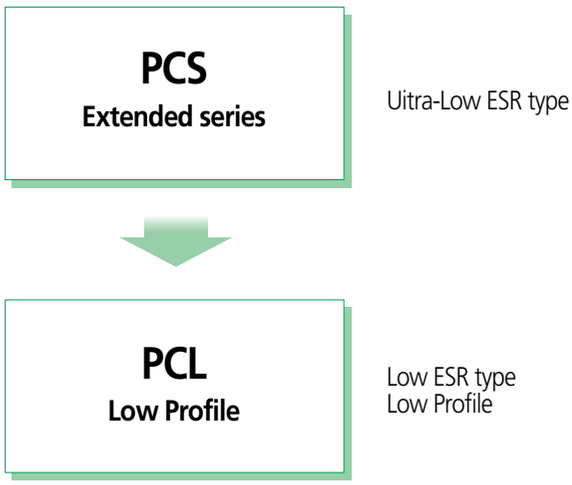

PCS
(Conductive Polymer Tantalum Chip Capacitors)



Feature

The Polymer Capacitor(PCS Series) have inherently low ESR(equivalent series resistance) and are capable of higher ripple current handling, producing lower ripple voltages, less power and heat dissipation than standard product for the most efficient use of circuit power.

The Polymer Capacitor has the same structure as a Mn02 type chip tantalum capacitor. It has conductive polymer cathode as a substitute for Mn02 type.

Specifications

Capacitance	Range	4.7㎌ to 330㎌		
	Tolerance	±20%(M)		
Dissipation Factor (Tan δ)		Refer to Specification		
Leakage Current		Refer to Specification		
Rated Voltage(VR)		2.5	6.3	10.0
Category Voltage(V)	T≤85℃	2.5	6.3	10.0
	85℃<T≤105℃	2.0	5.0	8.0
Surge Voltage(V)	T≤85℃	3.1	8.0	13.0
	85℃<T≤105℃	2.5	6.3	10.0
Operating Temperature		-55℃ to 105℃		

Standard Value and Case Size

Cap.(㎌) \ R.V	2.5V(0E)	6.3V(0J)	10V(1A)
4.7 / 475			P(1000)
100 / 107		B(40/45/70)	
150 / 157		B(35/70) L(200)	
220 / 227	B(35)		
330 / 337	(B)		

( ) : Under Development

Ratings & Part Number Reference

Part Number	Case Size	Capacitance (㎌)	DC Leakage (㎂) @+25℃ Max.	DF(%) @+25℃ 120Hz Max.	ESR(mΩ) @+25℃ Max.
2.5 volt Rating@+85℃(2.0 volt Rating@+105℃)					
TCPCS0E227MBAR0035	B(3528)	220	55	8	35
TCPCS0E227MBAR0055	B(3525)	220	55	8	55
6.3 volt Rating@+85℃(5.0 volt Rating@+105℃)					
TCPCS0J107MBAR0070	B(3528)	100	63	8	70
TCPCS0J107MBAR0045	B(3528)	100	63	8	45
TCPCS0J107MBAR0040	B(3528)	100	63	8	40
TCPCS0J157MBAR0035	B(3528)	150	94.5	8	35
TCPCS0J157MBAR0070	B(3528)	150	94.5	8	70
TCPCS0J157MLAR0200	L(3825)	150	94.5	10	200
10 volt Rating@+85℃(8 volt Rating@+105℃)					
TCPCS1A475MPAR1000	P(2012)	4.7	5	6	1000

Precautions in using Tantalum Capacitors
4 Characteristics Explanation
SCN Series
SCS Series
SCS-P Series
SCM Series
SCF Series
SCE Series
SCL Series
PCS Series
PCL Series
Marking Specification
Taping Specification

PCL
(Low-Profile Conductive Polymer Tantalum Chip Capacitors)



Feature

- Low -Profile case size
- Reduced thickness up to 63% of PCS series
- Compatible with automatic pick and place equipment.
- Terminations: 100 % Sn , RoHS Compliant

Specifications

Capacitance	Range	47㎌
	Tolerance	±20%(M)
Dissipation Factor (Tan δ)		Refer to Specification
Leakage Current		Refer to Specification
Rated Voltage(VR)		6.3
Category Voltage(V)	T≤85℃	6.3
	85℃＜T≤105℃	5.0
Surge Voltage(V)	T≤85℃	8.0
	85℃＜T≤105℃	6.3
Operating Temperature		-55℃ to 105℃

Standard Value and Case Size

Cap.(㎌) \ R . V	6.3V(0J)
47	476 T(70)

( ) : Under Development

Ratings & Part Number Reference

Part Number	Case Size	Capacitance (㎌)	DC Leakage (㎂) @+25℃ Max.	DF(%) @+25℃ 120Hz Max.	ESR(mΩ) @+25℃ Max.
6.3 volt Rating@+85℃(5 volt Rating@+105℃)					
TCPCL0J476MTAR0070	T(3528)	47	29.6	8	70

chanhvinh.com

A, B, C, D, S, T Case

A, S(Low-Profile) case

〔SCN, SCS, SCE series〕



〔SCL series〕



Capacitance Code in pF

Rated Voltage
(G: 4V J: 6.3V A: 10V C: 16V D: 20V E:25V V: 35V)

Polarity (White)

B, T (Low-Profile) case

〔SCN, SCS, SCE series〕

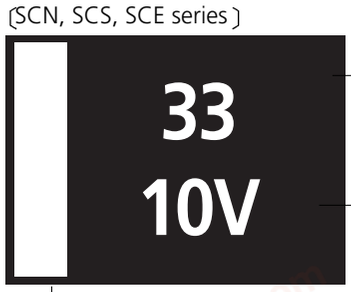

Capacitance Code in μF

Rated Voltage

Polarity (White)

〔SCL series〕

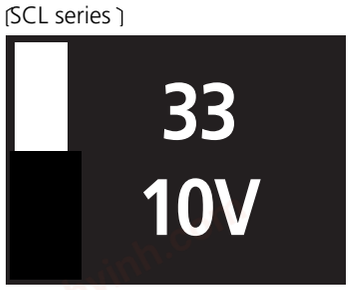

C, D case

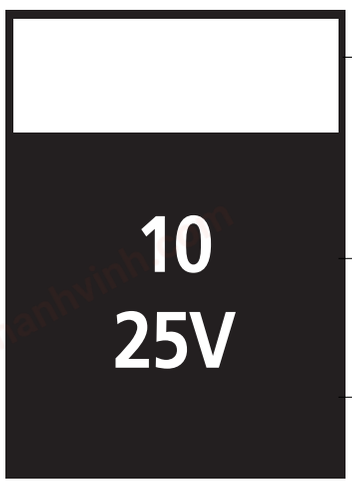

Polarity (White)

Capacitance in μF

Rated Voltage

Precautions in using Tantalum Capacitors
4 Characteristics Explanation
SCN Series
SCS Series
SCS-P Series
SCM Series
SCF Series
SCE Series
SCL Series
PCS Series
PCL Series
Marking Specification
Taping Specification

chanhvinh.com

SAMSUNG ELECTRO-MECHANICS

P, R Case

P, R(Low-Profile) case

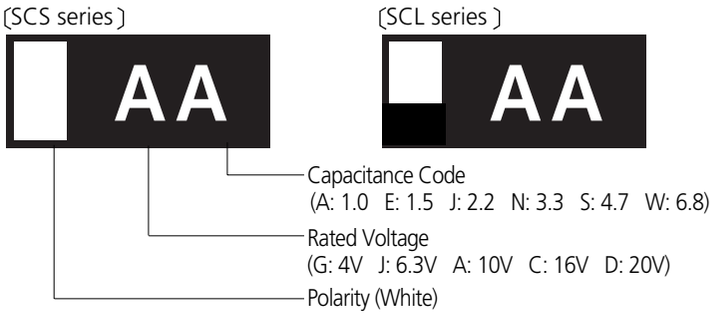

Code Reference

μF \ V	4	6.3	10	16	20
0.22	gj	jj	aj	cj	
0.47	gs	js	as	cs	ds
0.68	gw	jw	aw	cw	dw
1.0	Ga	Ja	Aa	Ca	
1.5					
2.2	Gj	SJ	Aj	Cj	
3.3	Gn	Jn	An		
4.7	Gs	Js	As		
6.8	Gw	Jw			
10	GA	JA	AA		
22	GJ	JJ			
33		JN			

chanhvinh.com

J, Q, K Case

1608 case (SCM series)

(J case) (Q case)

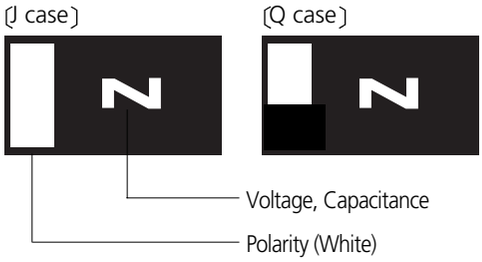

(K case)

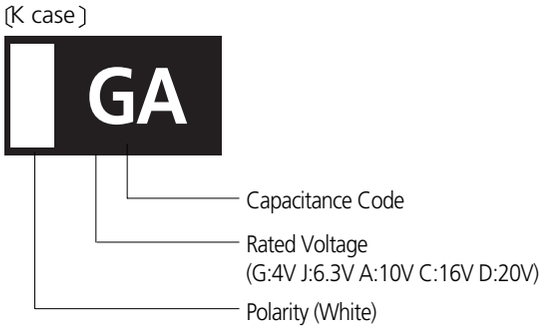

J, Q(Low-Profile) Case Code Reference

μF \ V	4	6.3	10	16
1.0		a	B	C
1.5	D	E	F	G
2.2	I	J	K	L
3.3	M	N	O	P
4.7	R	S	T	U
6.8	V	W	X	Y
10	Z	A	b	

K Case Code Reference

μF \ V	4	6.3	10	16
1.0				
1.5				
2.2				
3.3				
4.7		JS		
6.8				
10	GA			

Precautions in using Tantalum Capacitors
4 Characteristics Explanation
SCN Series
SCS Series
SCS-P Series
SCM Series
SCF Series
SCE Series
SCL Series
PCS Series
PCL Series
Marking Specification
Taping Specification

chanhvinh.com

SAMSUNG ELECTRO-MECHANICS

Conductive Polymer Type

P case

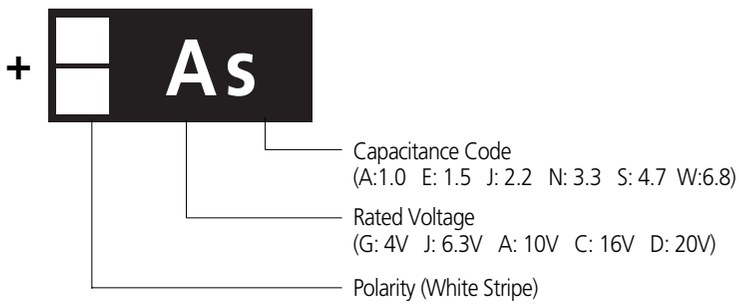

B, L, T case

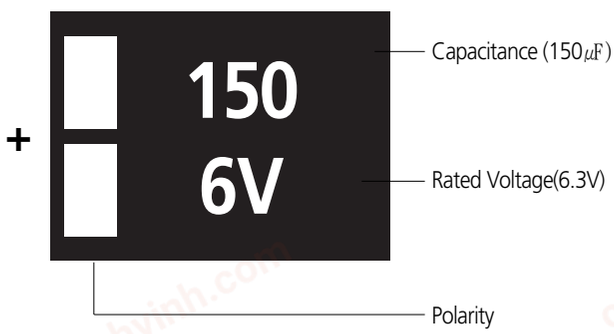

chanhvinh.com

Face Down Type

U case(1005mm size)



Rated Voltage, Capacitane Code

Polarity

I case(1005mm size)



Rated Voltage, Capacitane Code

μF \ RV	4	6.3	10
1.0		a	
2.2		j	
3.3			
4.7	r	s	

K case(1608mm size)



Rated Voltage, Capacitane Code

Polarity

P case(2012mm size)



Rated Voltage, Capacitane Code

Polarity

μF \ RV	4	6.3	10
22		J	
33	M		O
47		S	t

Precautions in using Tantalum Capacitors
4 Characteristics Explanation
SCN Series
SCS Series
SCS-P Series
SCM Series
SCF Series
SCE Series
SCL Series
PCS Series
PCL Series
Marking Specification
Taping Specification

Taping Specification

Taping Specification

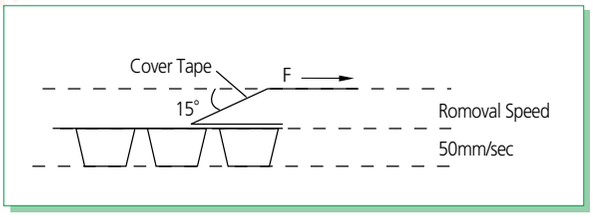

The tantalum chip capacitors shall be packaged in tape and reel from for effective use.

Tape: Semitransparent embossed plastic
Cover tape: Attached with press, polyester
The tension of removing the cover tape, F=10~70g

Carrier Tape Dimension

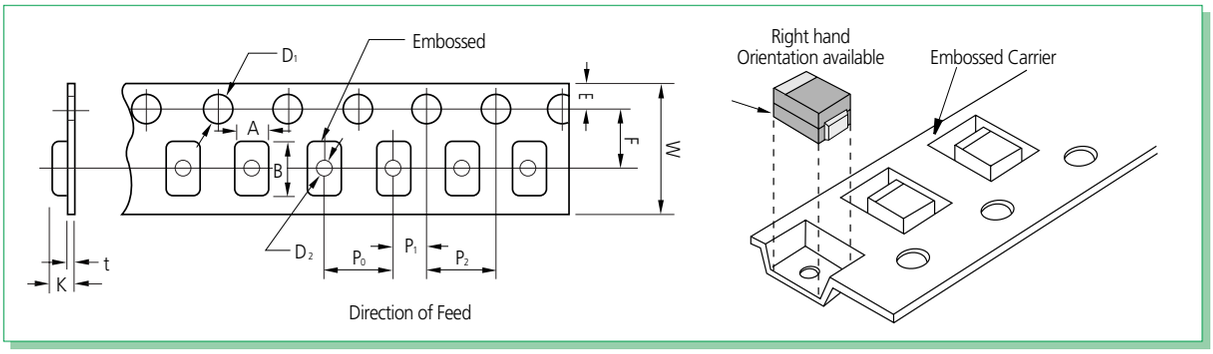

EMBOSSED PLASTIC TAPE

Unit: mm(inch)

Case Code	W±0.3	F±0.1	E±0.1	P0±0.1	P1±0.1	P2±0.1	D1+0.1	D2Min.	t	A±0.2	B±0.2	K±0.2
U, I	8	3.5	1.75	2	2	4	ø 1.5	ø 0.5	0.25	0.74 ±0.1	1.28 ±0.1	0.62 ±0.1
Q				4				ø 0.6		0.98	1.80	0.82
J,K												1.0
R								ø 1.0		1.4	2.3	1.1
P												1.4
S										1.9	3.5	1.3
A												1.9
T										3.3	3.8	1.3
B												2.1
C	12	5.5		8				ø 1.5		3.7	6.4	3.0
D										4.8	7.7	3.3

chanhvinh.com

Reel Dimension

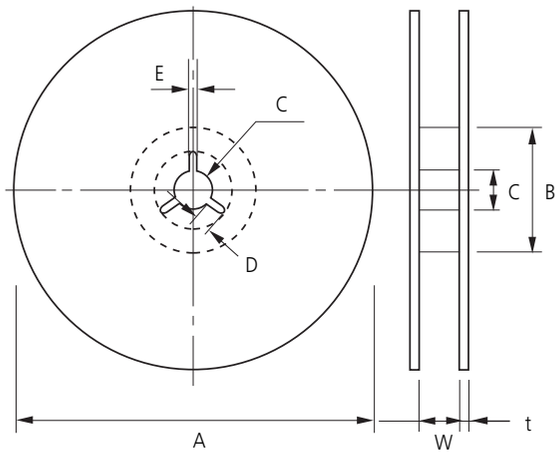

Unit: mm

Symbol	Tape Width	A	B	C	D
7" Reel	8mm	Ø180+0/-3	Ø60+1/-0	Ø13±0.3	Ø4±0.2
	12mm	Ø180+0/-3	Ø60+1/-0	Ø13±0.3	Ø4±0.2
13" Reel	8mm	Ø330±2.0	Ø80±1.0	Ø13±0.3	Ø4±0.2
	12mm	Ø330±2.0	Ø80±1.0	Ø13±0.3	Ø4±0.2

Symbol	Tape Width	E	W	t
7" Reel	8mm	2.0±0.5	9±0.5	1.2±0.2
	12mm	2.0±0.5	13±0.5	1.2±0.2
13" Reel	8mm	2.0±0.5	9±0.5	2.2±0.2
	12mm	2.0±0.5	13±0.5	2.2±0.2

Quantity Per Reel

Unit : mm(inch)

Case Code	178mm(7")reel	330mm(13")reel
U, I	10,000 pcs / Reel	-
J (Q), K	4,000 pcs / Reel	-
P (R)	3,000 pcs / Reel	-
A (S), B (T)	2,000 pcs / Reel	8,000 pcs / Reel
C, D	500 pcs / Reel	2,500 pcs / Reel

Precautions in using Tantalum Capacitors
4 Characteristics Explanation
SCN Series
SCS Series
SCS-P Series
SCM Series
SCF Series
SCE Series
SCL Series
PCS Series
PCL Series
Marking Specification
Taping Specification

chanhvinh.com

SAMSUNG ELECTRO-MECHANICS

Packaging Table

General type

Inner Box

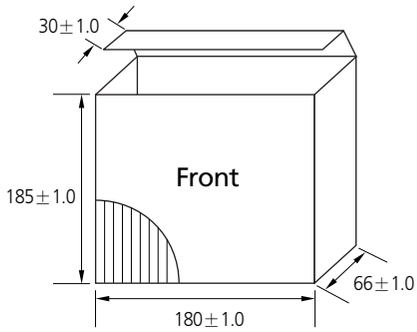

Outer Box

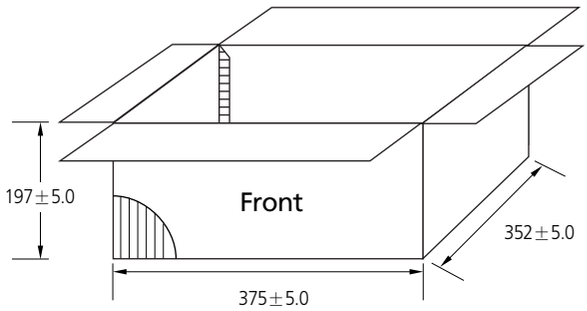

Polymer type

Inner Box

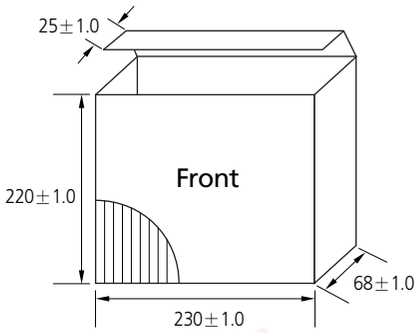

Outer Box

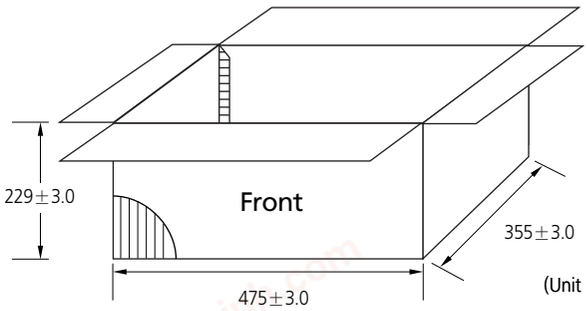

(Unit : mm)

TYPE	Inch	Taping Packaging			Box Packaging			
					Inner Box		Outer Box	
		Packaging Code	Reels	Quantity	Reels	Quantity Max	Inner Box	Quantity Max
1005	0402	AR	7″	10,000	5	50,000	10	500,000
1608	0603	AR	7″	4,000	5	20,000	10	200,000
2012	0805	AR	7″	3,000	5	15,000	10	150,000
3216	1206	AR	7″	2,000	5	10,000	10	100,000
		CR	13″	8,000	5	40,000	5	200,000
3528	1311	AR	7″	2,000	5	10,000	10	100,000
		CR	13″	8,000	5	40,000	5	200,000
6032	2312	AR	7″	500	4	2,000	10	20,000
		CR	13″	2,500	4	10,000	5	50,000
7343	2818	AR	7″	500	4	2,000	10	20,000
		CR	13″	2,500	4	10,000	5	50,000

chanhvinh.com

ISO/TS 16949	ISO 14001	OHSAS 18001	QC080000









Quality System Certification List

Table 1:Certification list of Samsung Factory

Certification	*Section*	*PHILIPPINES*
ISO / TS 16949	*Authority*	*BSI*
	Number	*TS 91430-005*
	Date	*2009 - 08 - 14*
	Validity	*2012 - 08 - 13*
ISO 14001	*Authority*	*BSI*
	Number	*EMS 77354*
	Date	*2009 - 08 - 04*
	Validity	*2012 - 08 - 03*
OSHAS18001	*Authority*	*BSI*
	Number	*OHS 568723*
	Date	*2010 - 12 - 21*
	Validity	*2013 - 12 - 20*
QC080000	*Authority*	*UL*
	Number	*PI-HSPM-1001*
	Date	*2010 - 07 - 05*
	Validity	*2013 - 07 - 04*

chanhvinh.com

SAMSUNG ELECTRO-MECHANICS

Inside Edge
www.semicr.com

Passive components sales offices

• Head office

206, Cheomdansaneop Road,
Yeongtong-gu, Suwon-city,
Gyeonggi province, Korea,
443-743

Europe
Tel:+82-31-210-6328
E-mail:james.pyun@samsung.com

America
Tel:+82-31-210-6803
E-mail:wesley.roh@samsung.com

Asia
Tel:+82-31-210-6791
E-mail:peter_kim@samsung.com

Domestic
Tel:+82-31-210-5074
E-mail:boungho.lee@samsung.com

• Manufacturing sites

Suwon Plant (Korea)
206, Cheomdansaneop Road,
Yeongtong-gu, Suwon-city,
Gyeonggi province, Korea,
443-743
Tel:+82-31-210-5074
E-mail:boungho.lee@samsung.com

Busan Plant (Korea)
1623-2, Songjeong-dong,
Gangseo-gu, Busan, Korea,
618-270
Tel:+82-51-970-7671
E-mail:kyc.kweon@samsung.com

Tianjin Plant (China)
27, Heiniucheng-Road, Hexi District,
Tianjin, 300210 China
Tel:+86-22-2397-9000(310)
E-mail:moohantop.Park@samsung.com

High Tech (China)
Xiqing Dist. Micro-Electronics
Industrial Park, Jingang Highway,
Tianjin, China 300485
Tel:+ 022-23979000-313
E-mail: enhao.song@samsung.com

Binhai Plant(China)
80, XiaQing Road, West area of
BinHai development zone,
TianJin, 300458, China
Tel:+86-22-6686-3333(1300)
E-mail:sk1000.kim@samsung.com

Philippines Plant (Philippines)
Block No.5, Calamba Premiere
International Park, Batino, Calamba,
Laguna, Manila, Philippines 4027
Tel:+63-49-545-0422
E-mail:donna@samsung.com

• Asia sales offices

Shenzhen Office
46 F, New World Center,
Yitian Road, Futian District,
Shenzhen, 518026 China
Tel:86-755-8608-5571
E-mail:jackson.xian@samsung.com

Shanghai Office
Rm. 1211, Shanghai International
Trade Center, No. 2201 Yan an(W) Rd.,
Shanghai, 200335 China
Tel:86-21-6270-4168(274)
E-mail:dennis.cha@samsung.com

HongKong Office
8/F.,Central Plaza, 18 Harbour Road,
Wanchai, Hongkong, China
Tel:852-28626344
E-mail:vivianchan@samsung.com

Qingdao Office
Rm 1201. Growne Plaza Qingdao 76,
Xiang Gang Zhong Rd, Qingdao,
266071 China
Tel:86-532-85779102
E-mail:zhengguo.cui@samsung.com

Taiwan Office
9F-1, Np. 399 Ruey Kuang Rd., Neihu
District, Taipei City, Taiwan, 114
Tel:886-2-2656-8356
E-mail:kevin0130.wang@samsung.com

Singapore Office
3 Church Street Samsung Hub,
#23-02 Singapore 049483
Tel:65-6833-3228
E-mail:winson.yeong@samsung.com

Bangkok Office
23rd Floor, Lake Rajada Office Complex
193/89 Rachadapisek Road,
Khet Klongtoey, Bangkok 10110, Thailand
Tel:66-2-661-8004~5
E-mail:yangshin.yi@samsung.com

• America sales office

Irvine Office
3333 Michelson Drive,
Suite 500, Irvine, CA 92612, USA
Tel:1-949-797-8016
E-mail:andrew.skelly@samsung.com

• Europe sales offices

Frankfurt Office
Samsung Haus, Am Kronberger Hang 6,
D-65824 Schwalbach/Ts. Germany
Tel:49-6196-66-7255
E-mail:frank.goebel@samsung.com

Hungary Office
H-2310, Leshegy utca 2-4,
Szigetszentmiklos, Pest megye, Hungary
Tel:36-24-551-148
E-mail:jun21c.lee@samsung.com

• Domestic Distributors

Korchip Corporation
817-38, Anyang 2-dong, Manan-gu,
Anyang-city, Gyeonggi province,
Korea, 430-812
Tel:+82-31-361-8100
E-mail:itasap@korchip.com

SAMT
Daekyung Bldg., 983-10, Daechi-dong,
Gangnam-gu, Seoul, Korea
Tel:+82-2-3458-9000
E-mail:info@isamt.com

CHUNGMAC
301 Gwonseon Medivill, 544-14
Gokbanjeong-dong, Gwonseon-gu,
Suwon-si, Gyeonggi-do Korea
Tel:+82-31-234-2367~8
E-mail:webmaster@chungmac.co.kr

YOUNGDUK
Gasan-Dong 632, Seobusaetgil,
Geumcheon-Gu, Seoul, Korea
Tel:+82-2-2107-7860
E-mail:siyang1109@gmail.com

All information indicated in this catalog is as of July. 2012
* The specifications and designs contained herein may be subject to change without notice.