chanhvinh.com

CUI Devices is now Same Sky! Learn More

same sky

Additional Resources: Product Page | 3D Model | PCB Footprint

MODEL: SLW-1276864-4A-D | DESCRIPTION: SLIDE SWITCH

FEATURES

- through hole
- raised slide actuator

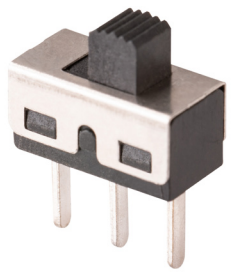

RoHS

SPECIFICATIONS

parameter	conditions/description	min	typ	max	units
rated voltage				30	Vdc
rated current				500	mA
withstanding voltage	for 1 minute		250		Vac
contact resistance	measured at 1 kHz at 100 mA or less			100	mΩ
insulation resistance	at 100 Vdc for 1 minute	100			MΩ
operating force		150	250	350	gf
actuator travel		2.0	2.2	2.4	mm
operating temperature		-20		70	°C
storage temperature		-40		90	°C
life	at uniform rate of 15~18 cycles per minute, no load		10,000		cycles
vibration	10~55~10 Hz, 1.5 mm amplitude, 2 hours on each XYZ				
flammability rating	see material table				
RoHS	yes				

SOLDERABILITY

parameter	conditions/description	min	typ	max	units
hand soldering	for max 3 seconds			350	°C
wave soldering	for max 5 seconds			260	°C

MECHANICAL DRAWING

units: mm
tolerance: ±0.20 mm
unless otherwise specified

DESCRIPTION	MATERIAL	PLATING/COLOR
knob	PA66	black
cover	SUS	natural
case	PA9T	black
terminal	brass	silver
contact	brass	silver
spring	steel wire	natural
steel ball	steel	natural

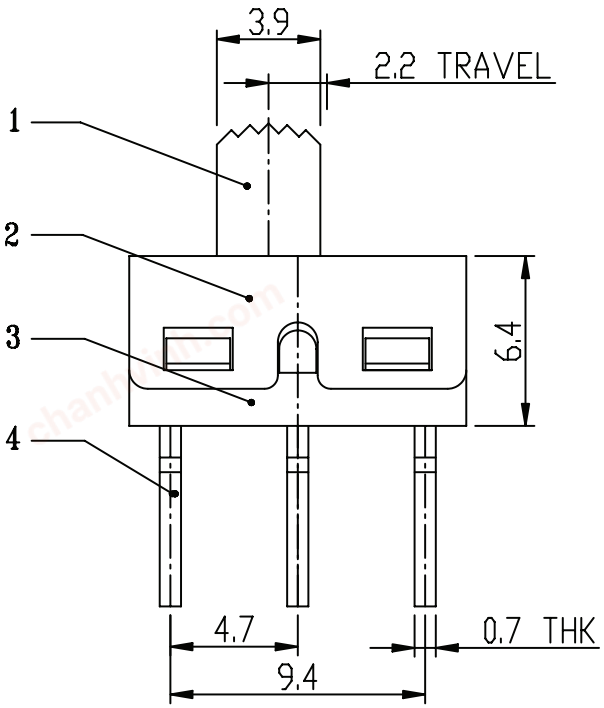

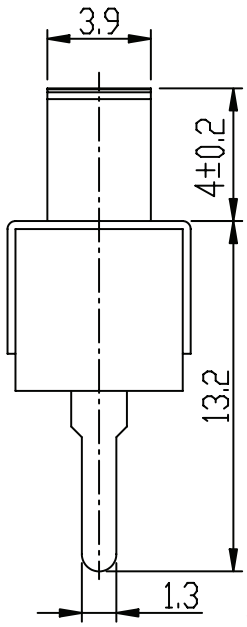

SCHEMATIC
SPDT (NON-SHORTING)

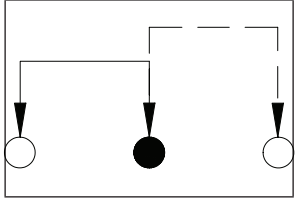

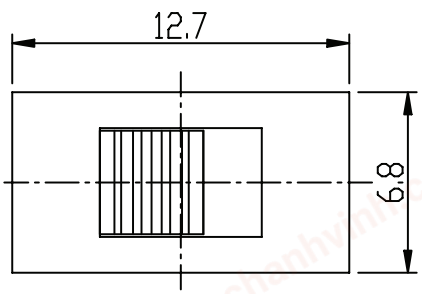

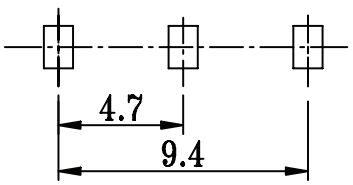

Recommended PCB Layout
Top View

chanhvinh.com

REVISION HISTORY

rev.	description	date
1.0	initial release	07/07/2023
1.01	CUI Devices rebranded to Same Sky	09/12/2024

The revision history provided is for informational purposes only and is believed to be accurate.

Same Sky offers a one (1) year limited warranty. Complete warranty information is listed on our website.

Same Sky reserves the right to make changes to the product at any time without notice. Information provided by Same Sky is believed to be accurate and reliable. However, no responsibility is assumed by Same Sky for its use, nor for any infringements of patents or other rights of third parties which may result from its use.

Same Sky products are not authorized or warranted for use as critical components in equipment that requires an extremely high level of reliability. A critical component is any component of a life support device or system whose failure to perform can be reasonably expected to cause the failure of the life support device or system, or to affect its safety or effectiveness.

sameskydevices.com