chanhvinh.com

CUI Devices is now Same Sky! Learn More

same sky

SERIES: SJ-352X-SMT | DESCRIPTION: AUDIO JACK

FEATURES

- low profile design
- switch options inclue:
  -no switch
  -tip switch



RoHS

PART NUMBER KEY

SJ - 352 X - SMT - TR - X

Base Number	Switch Options: 3 = no switch 4 = tip switch	Package Style: SMT = surface mount	Packaging: TR = Tape & Reel	Color Options: "blank" = black BE = blue[1] GR = green[1] PI = pink[1]

Note: 1. Tip switch option only

SPECIFICATIONS

parameter	conditions/description	min	typ	max	units
rated input voltage			12		Vdc
rated input current				1	A
contact resistance				50	mΩ
insulation resistance	at 500 Vdc	100			MΩ
voltage withstand	for 1 minute			500	Vac
insertion/withdrawal force		0.3		3	kg
operating temperature		-25		85	°C
life			5,000		cycles
flammability rating	UL94V-0				
RoHS	yes				

chanhvinh.com

MECHANICAL DRAWING

units: mm
tolerance:
X. ±0.5 mm
X.X ±0.3 mm
X.XX ±0.20 mm
PCB: ±0.05 mm

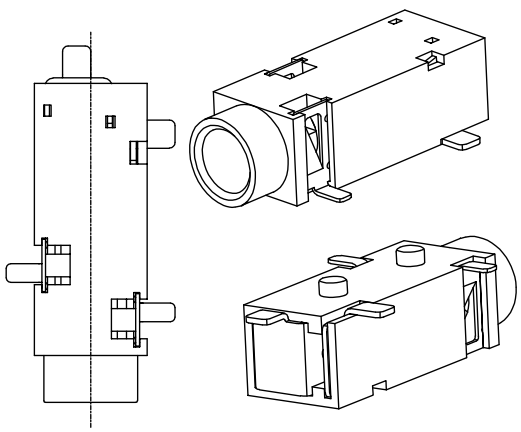

DESCRIPTION	MATERIAL	PLATING/COLOR
terminal 1	phosphor copper t=0.2 mm	silver
terminal 2	phosphor copper t=0.3 mm	silver
terminal 3	phosphor copper t=0.2 mm	silver
terminal 4	brass t=0.3 mm	silver
housing	PA10T (UL94V-0)	see part number key

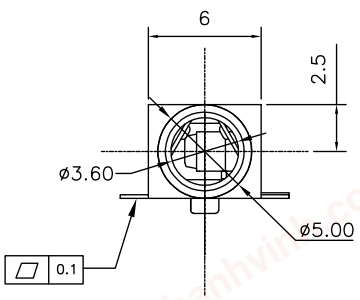

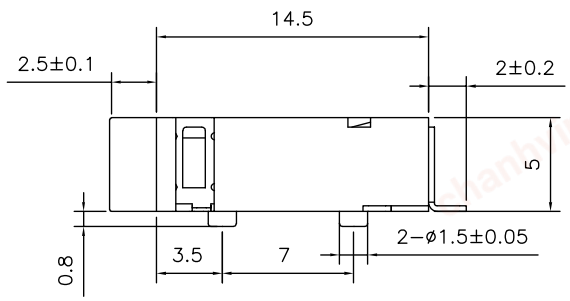

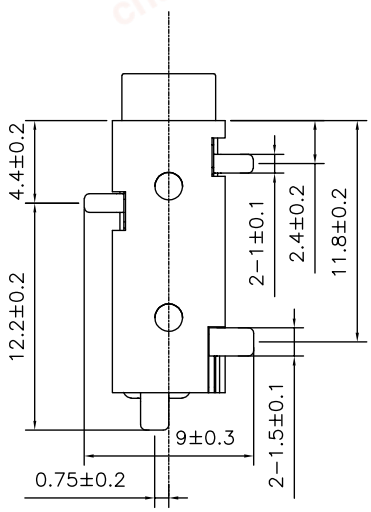

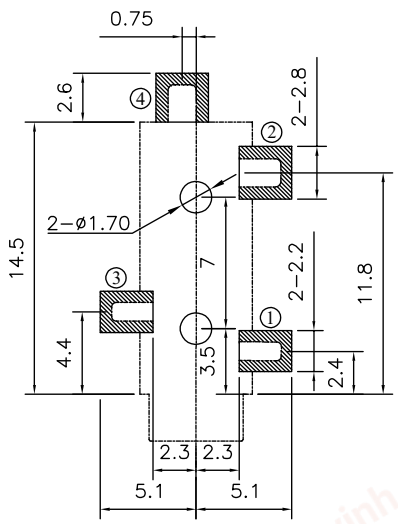

Recommended PCB Layout
Top View

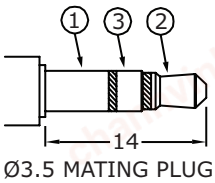

Ø3.5 MATING PLUG

Model No.	SJ-3523-SMT	SJ-3524-SMT
Schematic	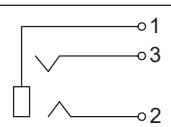	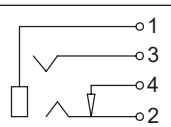
PIN		
1	sleeve	sleeve
2	tip	tip
3	ring	ring
4	NP	tip switch

chanhvinh.com

SOLDERABILITY

parameter	conditions/description	min	typ	max	units
reel storage	-5~35°C, 25~80% humidity reel opened: use within 1 month reel unopened: use within 6 months				
reflow soldering	see reflow profile			260	°C

Note: 1. Same Sky recommends usage of the product within 2 hours after T&R is opened. After 6 hours, Same Sky recommends drying the parts prior to use.

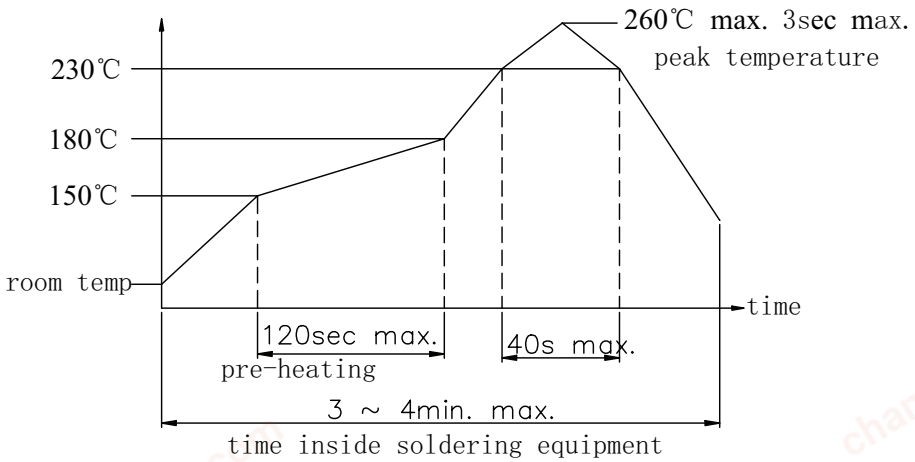

PACKAGING

units: mm

Reel Size: Ø380 mm
Reel QTY: 1,000 pcs per reel

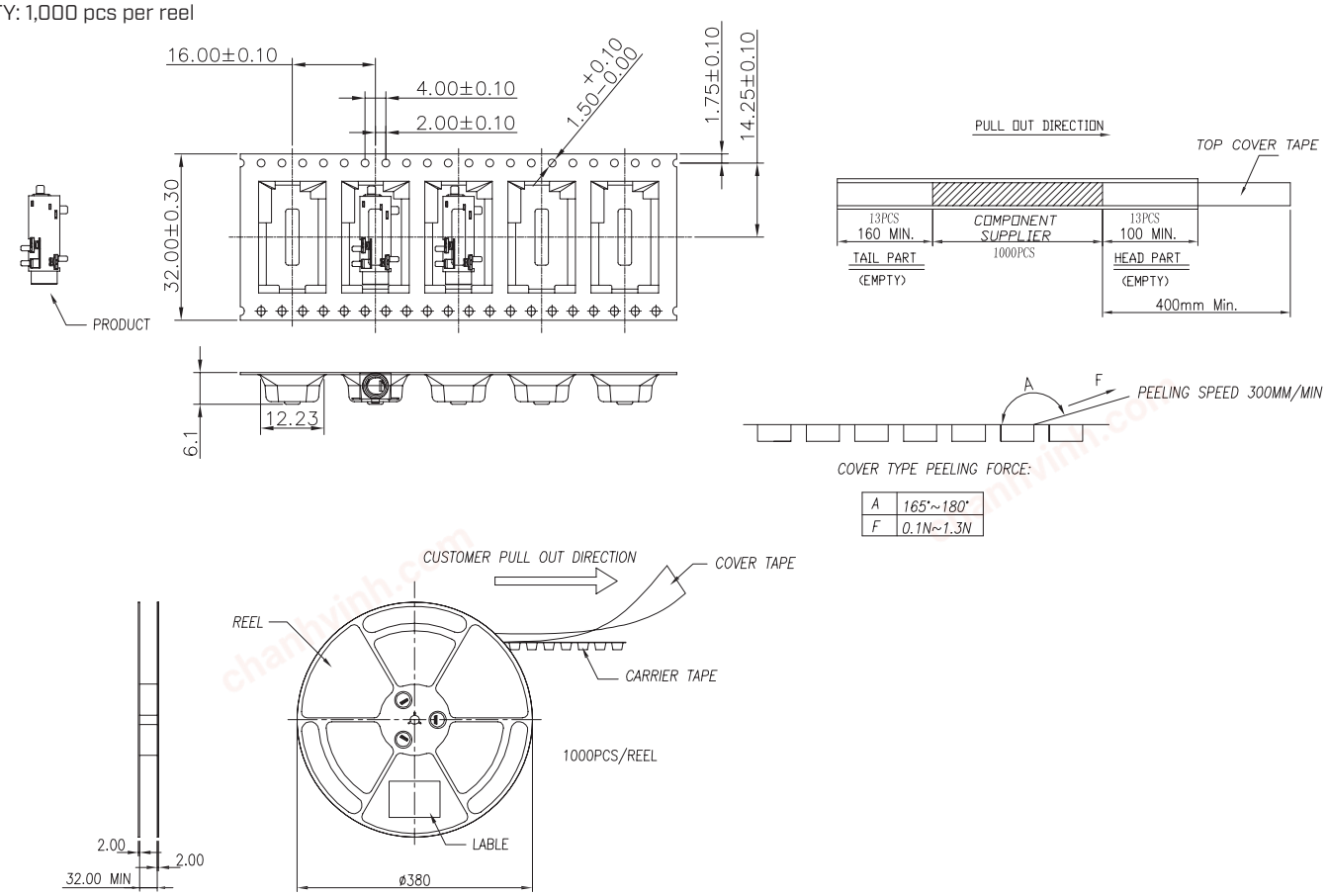

chanhvinh.com

REVISION HISTORY

rev.	description	date
1.0	initial release	02/07/2006
1.01	new remplate applied	01/25/2012
1.02	added TR package and color options	11/01/2012
1.03	added storage and drying conditions, and tape and reel packaging details	02/15/2018
1.04	brand update	10/09/2019
1.05	modified housing, changed terminal 4 material	08/24/2022
1.06	CUI Devices rebranded to Same Sky	09/12/2024
1.07	modified housing, terminal materials changed	04/15/2025

The revision history provided is for informational purposes only and is believed to be accurate.

Same Sky offers a one (1) year limited warranty. Complete warranty information is listed on our website.

Same Sky reserves the right to make changes to the product at any time without notice. Information provided by Same Sky is believed to be accurate and reliable. However, no responsibility is assumed by Same Sky for its use, nor for any infringements of patents or other rights of third parties which may result from its use.

Same Sky products are not authorized or warranted for use as critical components in equipment that requires an extremely high level of reliability. A critical component is any component of a life support device or system whose failure to perform can be reasonably expected to cause the failure of the life support device or system, or to affect its safety or effectiveness.