chanhvinh.com

CUI Devices is now Same Sky! Learn More

same sky

SERIES: SJ-252X-SMT | DESCRIPTION: AUDIO JACK

FEATURES

- low profile design
- switch options include:
  - no switch
  - tip switch

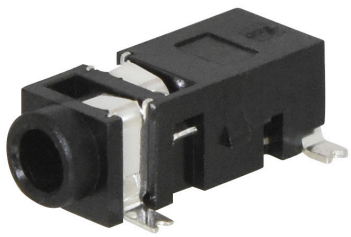

RoHS

PART NUMBER KEY

SJ - 252 X - SMT - TR

- Base Number
- Switch Options: 3 = no switch, 4 = tip switch
- Packaging: TR = Tape & Reel

SPECIFICATIONS

parameter	conditions/description	min	typ	max	units
rated input voltage			12		Vdc
rated input current				1	A
contact resistance[1]	between terminal and mating plug between terminal in a closed circuit			50 30	mΩ mΩ
insulation resistance	at 500 Vdc	100			MΩ
voltage withstand	for 1 minute			500	Vac
insertion/withdrawal force		0.3		3	kg
operating temperature		-25		85	°C
life			5,000		cycles
flammability rating	UL94V-0				
RoHS	yes				

chanhvinh.com

MECHANICAL DRAWING

units: mm
tolerance:
X.X ±0.3 mm
X.XX ±0.25 mm
X.XXX ±0.20 mm
PCB: ±0.05 mm
unless otherwise specified

DESCRIPTION	MATERIAL	PLATING/COLOR
terminal 1	phosphor bronze t=0.25	silver over nickel
terminal 2	phosphor bronze t=0.30	silver over nickel
terminal 3	phosphor bronze t=0.25	silver over nickel
terminal 4	brass t=0.30	silver over nickel
housing	PA10T (UL94V-0)	black

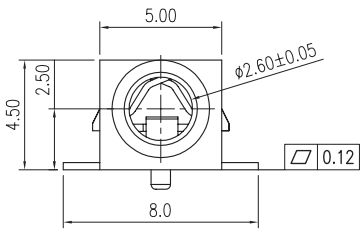

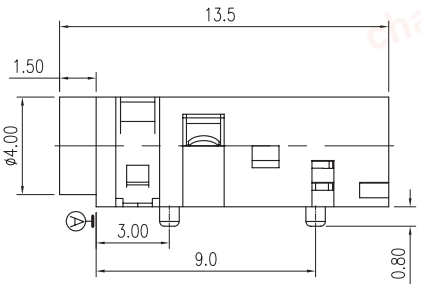

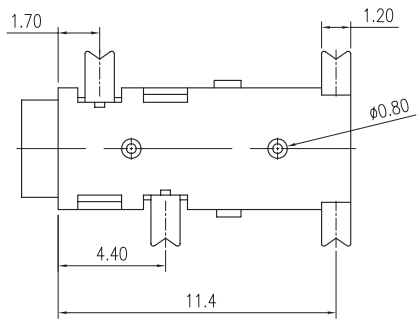

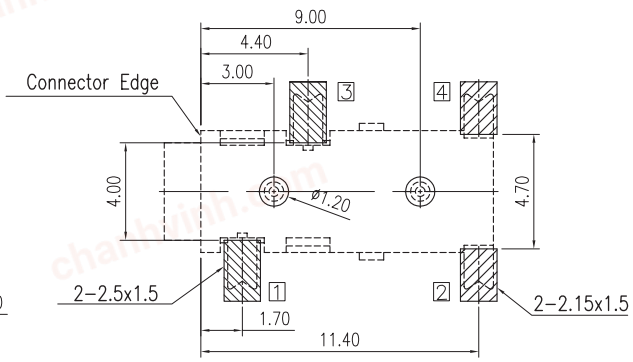

Recommended PCB Layout
Top View

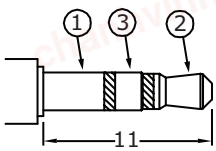

Ø2.5 MATING PLUG

Model No.	SJ-2523-SMT	SJ-2524-SMT
Schematic	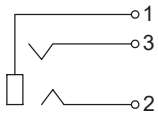	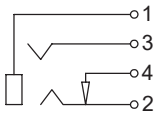
PIN		
1	sleeve	sleeve
2	tip	tip
3	ring	ring
4	NP	tip switch

SOLDERABILITY

parameter	conditions/description	min	typ	max	units
reel storage	5~25°C, 20~75% humidity				
reflow soldering	see reflow profile	255	260		°C

Note: 1. Same Sky recommends usage of the product within 24 hours after T&R is opened. After 24 hours, Same Sky recommends drying the parts prior to use.

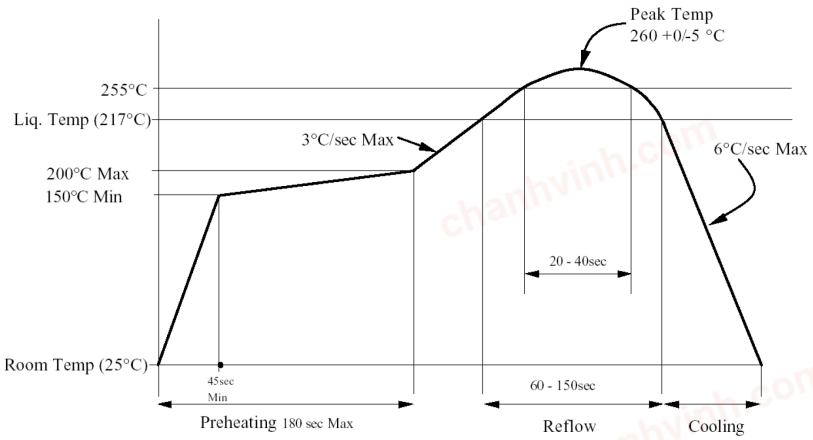

PACKAGING

units: mm

Reel Size: Ø330 mm
Reel QTY: 1,000 pcs per reel

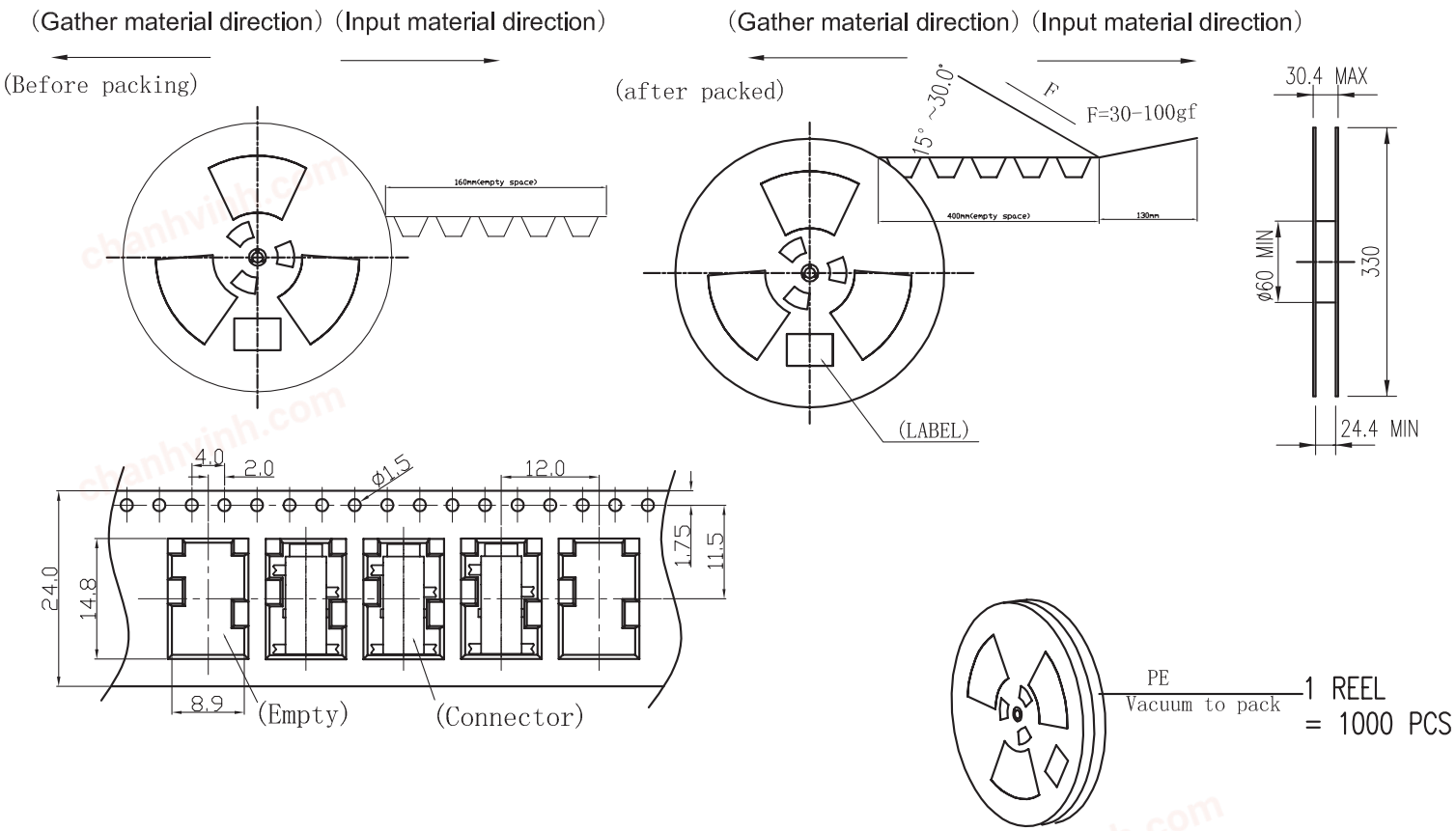

chanhvinh.com

REVISION HISTORY

rev.	description	date
1.0	initial release	11/09/2005
1.01	new template applied	01/30/2012
1.02	added TR package option	11/01/2012
1.03	added storage and drying conditions, and tape and reel packaging details	02/14/2018
1.04	brand update	10/09/2019
1.05	product reengineered for improved manufacturability and production yield, see PCN for details	11/15/2022
1.06	CUI Devices rebranded to Same Sky	09/12/2024

The revision history provided is for informational purposes only and is believed to be accurate.

Same Sky offers a one (1) year limited warranty. Complete warranty information is listed on our website.

Same Sky reserves the right to make changes to the product at any time without notice. Information provided by Same Sky is believed to be accurate and reliable. However, no responsibility is assumed by Same Sky for its use, nor for any infringements of patents or other rights of third parties which may result from its use.

Same Sky products are not authorized or warranted for use as critical components in equipment that requires an extremely high level of reliability. A critical component is any component of a life support device or system whose failure to perform can be reasonably expected to cause the failure of the life support device or system, or to affect its safety or effectiveness.

sameskydevices.com