chanhvinh.com

CUI Devices is now Same Sky! Learn More

same sky

SERIES: RCJ-02 | DESCRIPTION: RCA JACK

FEATURES

- through hole
- 2 conductors, 2 contacts



RoHS

PART NUMBER KEY

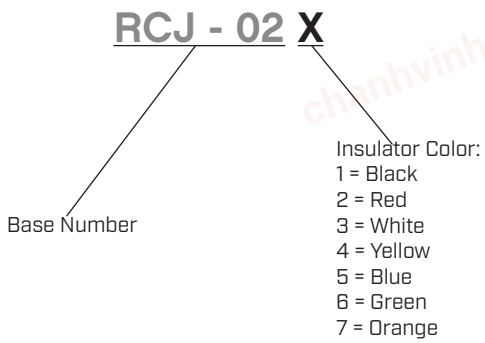

SPECIFICATIONS

parameter	conditions/description	min	typ	max	units
contact resistance				30	mΩ
insulation resistance	at 500 Vdc	100			MΩ
voltage withstand	for 1 minute			500	Vac
life			5,000		cycles
flammability rating	UL94V-0				
RoHS	yes				

MECHANICAL DRAWING

units: mm
tolerance:
X. ±0.50 mm
X.X ±0.30 mm
X.XX ±0.25 mm
X.XXX ±0.10 mm
unless otherwise specified

ITEM	DESCRIPTION	MATERIAL	PLATING/COLOR
1	insulator	PA10T (UL94V-0)	black
2	insulator	PBT (UL94V-0)	see color code
3	terminal	brass	tin
4	mounting bracket	SPCC	tin
5	shell	brass	nickel

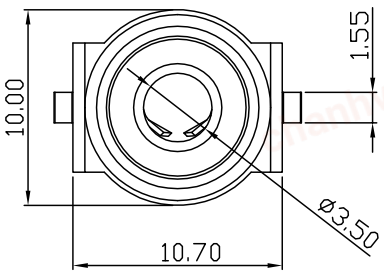

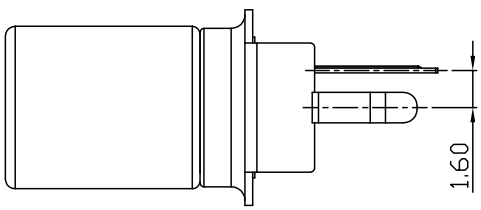

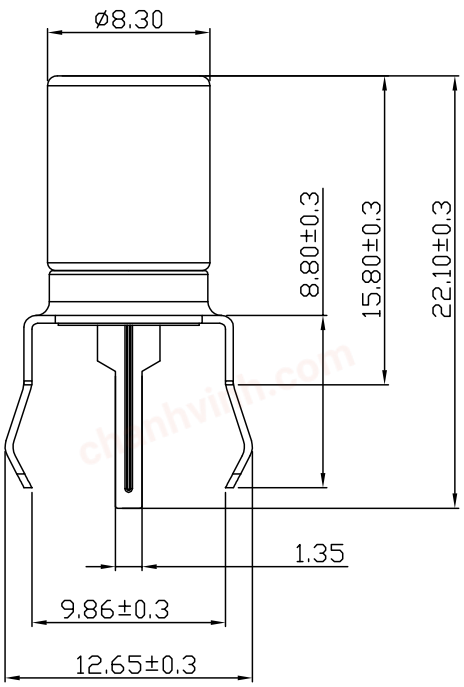

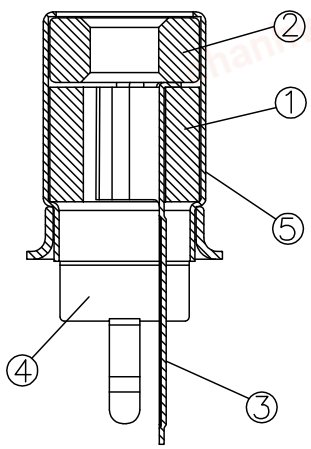

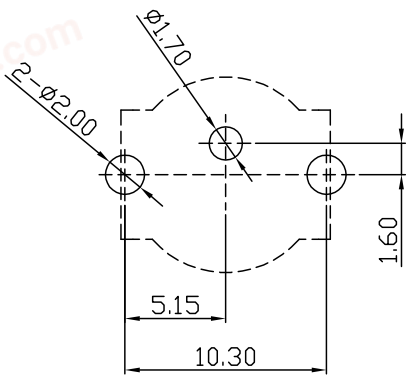

Recommended PCB Layout
Top View

Model No.	RCJ-02
Schematic	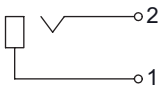

chanhvinh.com

REVISION HISTORY

rev.	description	date
1.0	initial release	01/10/2006
1.01	updated drawing	05/08/2013
1.02	updated drawing, brand update	11/04/2021
1.03	logo, datasheet style update	11/21/2022
1.04	CUI Devices rebranded to Same Sky	09/12/2024
1.05	factory location change	06/25/2026

The revision history provided is for informational purposes only and is believed to be accurate.

Same Sky offers a one (1) year limited warranty. Complete warranty information is listed on our website.

Same Sky reserves the right to make changes to the product at any time without notice. Information provided by Same Sky is believed to be accurate and reliable. However, no responsibility is assumed by Same Sky for its use, nor for any infringements of patents or other rights of third parties which may result from its use.

Same Sky products are not authorized or warranted for use as critical components in equipment that requires an extremely high level of reliability. A critical component is any component of a life support device or system whose failure to perform can be reasonably expected to cause the failure of the life support device or system, or to affect its safety or effectiveness.