chanhvinh.com

Rubycon

CHIP ALUMINUM ELECTROLYTIC CAPACITORS TZV

TZV SERIES

105℃ Low Impedance, Lead Free Reflow Soldering.



◆FEATURES

- Load Life : 105℃ 2000 hours.
- Lead free reflow soldering is available.
- Available for high density mounting.
- Low impedance at 100kHz with selected materials.
- RoHS compliance.

◆SPECIFICATIONS

Items	Characteristics
Category Temperature Range	−55～+105℃
Rated Voltage Range	6.3～50V.DC
Capacitance Tolerance	±20%(20℃,120Hz)
Leakage Current(MAX)	I=0.01CV or 3μA whichever is greater. (After 2 minutes application of rated voltage) I=Leakage Current(μA) C=Rated Capacitance(μF) V=Rated Voltage(V)
(tanδ) Dissipation Factor(MAX)	(20℃,120Hz)
Endurance	After applying rated voltage with rated ripple current for 2000 hrs at 105℃, the capacitors shall meet the following requirements.
Low Temperature Stability Impedance Ratio(MAX)	(120Hz)

Rated Voltage (V)	6.3	10	16	25	35	50
tanδ	0.26	0.19	0.16	0.14	0.12	0.10

Capacitance Change	Within ±30% of the initial value.
Dissipation Factor	Not more than 200% of the specified value.
Leakage Current	Not more than the specified value.

Rated Voltage (V)	6.3	10	16	25	35	50
Z(−25℃)/Z(20℃)	2	2	2	2	2	2
Z(−40℃)/Z(20℃)	3	3	3	3	3	3
Z(−55℃)/Z(20℃)	4	4	4	3	3	3

◆MULTIPLIER FOR RIPPLE CURRENT

Frequency coefficient

Frequency (Hz)		120	1k	10k	100k≦
Coefficient	4.7μF	0.42	0.60	0.80	1.00
	10～33μF	0.45	0.75	0.90	1.00
	47～100μF	0.50	0.80	0.95	1.00
	220～1000μF	0.60	0.85	0.95	1.00

◆MARKING

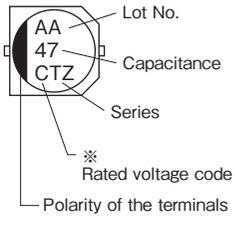

※Voltage Code

Rated Voltage (V)	6.3	10	16	25	35	50
Rated Voltage code	j	A	C	E	V	H

◆PART NUMBER

□□□	TZV	□□□□□	□	□□□	D×L
Rated Voltage	Series	Rated Capacitance	Capacitance Tolerance	Option	Case Size

chanhvinh.com

Rubycon

CHIP ALUMINUM ELECTROLYTIC CAPACITORS TZV

◆DIMENSIONS

(mm)

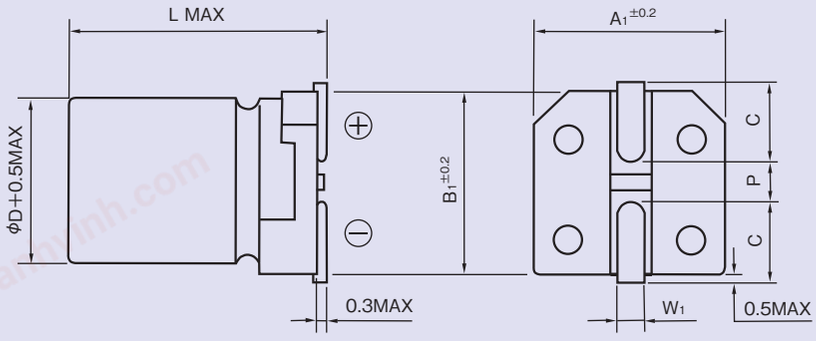

ϕD	L	A1	B1	C	W1	P
4	6.1	4.3	4.3	1.8	0.5~0.8	1.0
5	6.1	5.3	5.3	2.2	0.5~0.8	1.3
6.3	6.1	6.6	6.6	2.7	0.5~0.8	1.8
6.3	8	6.6	6.6	2.7	0.5~0.8	1.8
8	10.5	8.3	8.3	2.9	0.8~1.1	3.1
10	10.5	10.3	10.3	3.2	0.8~1.1	4.5

◆STANDARD SIZE

Size ϕD×L(mm), Ripple Current (mA r.m.s./105℃, 100kHz), Impedance(Ω MAX/20℃, 100kHz)

WV (V.DC) / Cap(μF)	6.3 (0J)			10 (1A)			16 (1C)		
	Size	Ripple	Impedance	Size	Ripple	Impedance	Size	Ripple	Impedance
10							4×6.1	90	1.35
22	4×6.1	90	1.35				4×6.1	90	1.35
							5×6.1	170	0.70
33				4×6.1	90	1.35	5×6.1	170	0.70
47	4×6.1	90	1.35				5×6.1	170	0.70
	5×6.1	170	0.70				6.3×6.1	250	0.36
100	5×6.1	170	0.70				6.3×6.1	250	0.36
	6.3×6.1	250	0.36				6.3×8	300	0.34
220	6.3×6.1	250	0.36	6.3×8	300	0.34	6.3×8	300	0.34
	6.3×8	300	0.34						
330	6.3×8	300	0.34				8×10.5	600	0.16
470				8×10.5	600	0.16	8×10.5	600	0.16
680				8×10.5	600	0.16	10×10.5	850	0.08
1000	8×10.5	600	0.16	10×10.5	850	0.08			

WV (V.DC) / Cap(μF)	25 (1E)			35 (1V)			50 (1H)		
	Size	Ripple	Impedance	Size	Ripple	Impedance	Size	Ripple	Impedance
4.7				4×6.1	90	1.45	4×6.1	60	2.90
10				4×6.1	90	1.45	5×6.1	85	1.52
				5×6.1	170	0.70	6.3×6.1	165	0.88
22				5×6.1	170	0.70	6.3×6.1	165	0.88
				6.3×6.1	250	0.36			
33	5×6.1	170	0.70	6.3×6.1	250	0.36	6.3×8	195	0.68
	6.3×6.1	250	0.36						
47	6.3×6.1	250	0.36	6.3×6.1	250	0.36	6.3×8	195	0.68
				6.3×8	300	0.34			
100	6.3×8	300	0.34	6.3×8	300	0.34	8×10.5	350	0.34
				8×10.5	600	0.16			
220	8×10.5	600	0.16	8×10.5	600	0.16	10×10.5	670	0.18
330	8×10.5	600	0.16	10×10.5	850	0.09			
470	10×10.5	850	0.09						