chanhvinh.com

Rubycon **LARGE CAN TYPE ALUMINUM ELECTROLYTIC CAPACITORS** **MXG**

MXG SERIES

105℃ Miniaturized, Snap-in Terminal Type

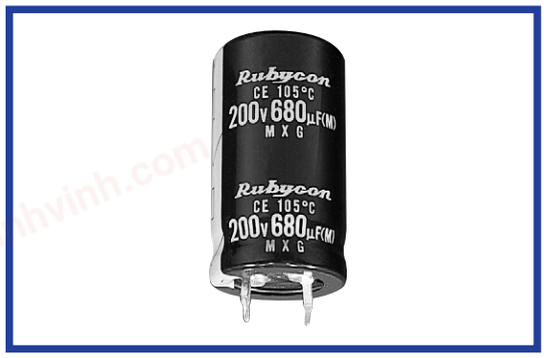

◆FEATURES

- Load Life : 105℃ 3000 hours.(50~100WV:2000 hours)
- Smaller size than MXC series.
- RoHS compliance.

◆SPECIFICATIONS

Items	Characteristics	
Category Temperature Range	−40~+105℃	−25~+105℃
Rated Voltage Range	50~100V.DC	160~500V.DC
Capacitance Tolerance	±20%(20℃,120Hz)	
Leakage Current(MAX)	$I=3\sqrt{CV}$ (After 5 minutes application of rated voltage) I=(μA) Leakage Current C=(μF) Rated Capacitance V=(V) Rated Voltage	
(tanδ) Dissipation Factor(MAX)	(20℃,120Hz)	
Endurance	After applying rated voltage with rated ripple current for 3000 hours (50~100W:2000 hours) at 105℃, the capacitors shall meet the following requirements.	
Low Temperature Stability Impedance Ration(MAX)	(120Hz)	

Rated Voltage	50	63	80~100	160~450	500
tanδ	0.35	0.30	0.25	0.20	0.25

Endurance	
Capacitance Change	Within ±20% of the initial value.
Dissipation Factor	Not more than 200% of the specified value.
Leakage Current	Not more than the specified value.

Rated Voltage	50~100	160~250	400~450	500
Z(−25℃)/Z(20℃)	3	4	8	12
Z(−40℃)/Z(20℃)	12	−	−	−

◆MULTIPLIER FOR RIPPLE CURRENT

Frequency Coefficient

(Hz) Frequency		60(50)	120	500	1k	10k≦
Coefficient	50~100WV	0.90	1.00	1.05	1.10	1.15
	160~250WV	0.80	1.00	1.20	1.30	1.50
	400~500WV	0.80	1.00	1.20	1.25	1.40

◆PART NUMBER

□□□	MXG	□□□□□	M	□□□	SN	D×L
Rated Voltage	Series	Rated Capacitance	Capacitance Tolerance	Option	Terminal Code	Case Size

◆OPTION

	Code
PET Sleeve without plate	EFC

◆DIMENSIONS (mm)

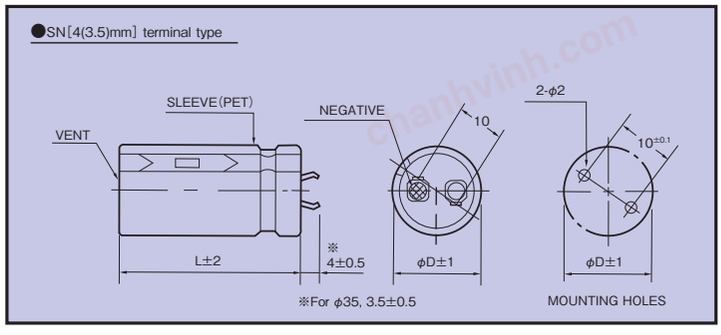

chanhvinh.com

Rubycon **LARGE CAN TYPE ALUMINUM ELECTROLYTIC CAPACITORS** **MXG**

◆STANDARD SIZE

WV / Cap (μF) / φD	50										63									
	φ20		φ22		φ25		φ30		φ35		φ20		φ22		φ25		φ30		φ35	
1500											20×25	1.47								
1800											20×30	1.58								
2200	20×25	1.60									20×35	1.82								
2700	20×30	1.73	22×25	1.73									22×30	2.11	25×25	2.11				
3300	20×35	1.97	22×30	1.97									22×35	2.33						
3900	20×40	2.22	22×35	2.22	25×25	2.22							22×40	2.55	25×30	2.55	30×25	2.55		
4700	20×45	2.43	22×40	2.43	25×30	2.43							22×45	2.97	25×35	2.97				
5600			22×45	2.75	25×35	2.75	30×25	2.75							25×40	3.22	30×30	3.22	35×25	3.22
6800			22×50	3.30	25×40	3.30	30×30	3.30	35×25	3.30					25×45	3.65	30×35	3.65	35×30	3.65
8200					25×45	3.60	30×35	3.60									30×40	4.04	35×35	4.04
10000					25×50	4.05	30×40	4.05	35×30	4.05							30×45	4.48	35×40	4.48
12000							30×45	4.56	35×35	4.56									35×45	4.75
15000							30×50	4.77	35×40	4.77									35×50	5.25

WV / Cap (μF) / φD	80										100									
	φ20		φ22		φ25		φ30		φ35		φ20		φ22		φ25		φ30		φ35	
680											20×25	1.15								
820											20×30	1.32	22×25	1.32						
1000	20×25	1.24									20×30	1.47								
1200	20×30	1.44	22×25	1.44							20×35	1.69	22×30	1.69	25×25	1.69				
1500	20×30	1.59											22×35	1.98	25×30	1.98				
1800	20×35	1.79	22×30	1.79	25×25	1.79							22×40	2.23			30×25	2.23		
2200	20×40	2.03	22×35	2.03											25×40	2.55	30×30	2.55	35×25	2.55
2700			22×40	2.39			30×25	2.39							25×45	2.89	30×35	2.89		
3300			22×50	2.64			30×30	2.64	35×25	2.64					25×50	3.30	30×40	3.30		
3900					25×45	2.97	30×30	2.97									30×45	3.67	35×35	3.67
4700					25×50	3.38	30×35	3.38	35×30	3.38							30×50	3.80	35×40	3.80
5600							30×40	3.80	35×35	3.80									35×45	4.05
6800							30×50	4.10	35×40	4.10										
8200									35×45	4.30										

WV / Cap (μF) / φD	160										180									
	φ20		φ22		φ25		φ30		φ35		φ20		φ22		φ25		φ30		φ35	
330	20×25	1.17									20×25	1.20								
390	20×25	1.28									20×30	1.28	22×25	1.28						
470	20×30	1.40	22×25	1.40							20×35	1.38	22×30	1.38						
560	20×35	1.50	22×30	1.50							20×40	1.50	22×30	1.50	25×25	1.50				
680	20×40	1.70	22×30	1.70	25×25	1.70					20×45	1.70	22×35	1.70	25×30	1.70				
820			22×35	2.00	25×30	2.00							22×40	2.00	25×35	2.00	30×25	2.00		
1000			22×40	2.20	25×35	2.20	30×25	2.20							25×40	2.20	30×30	2.20	35×25	2.20
1200					25×40	2.30	30×30	2.30	35×25	2.30					25×45	2.30	30×35	2.30	35×30	2.30
1500					25×45	2.50	30×35	2.50	35×30	2.50					25×50	2.50	30×40	2.50	35×30	2.50
1800							30×40	2.70	35×35	2.70							30×45	2.70	35×35	2.70
2200							30×45	2.90	35×40	2.90							30×50	2.90	35×40	2.90
2700									35×45	3.10									35×50	3.10

WV / Cap (μF) / φD	200										220									
	φ20		φ22		φ25		φ30		φ35		φ20		φ22		φ25		φ30		φ35	
220											20×25	0.98								
270	20×25	0.99									20×30	1.08	22×25	1.08						
330	20×30	1.20	22×25	1.20							20×30	1.26	22×25	1.26						
390	20×30	1.34	22×25	1.34							20×35	1.34	22×30	1.34	25×25	1.34				
470	20×35	1.48	22×30	1.48	25×25	1.48					20×40	1.48	22×35	1.48	25×25	1.48				
560	20×40	1.60	22×35	1.60	25×25	1.60					20×45	1.61	22×40	1.61	25×30	1.61	30×25	1.61		
680			22×40	1.75	25×30	1.75	30×25	1.75					22×45	1.78	25×35	1.78	30×25	1.78		
820			22×45	2.04	25×35	2.04	30×25	2.04					22×50	1.93	25×40	1.93	30×30	1.93	35×25	1.93
1000					25×45	2.30	30×30	2.30							25×50	2.33	30×35	2.33	35×30	2.33
1200					25×50	2.65	30×35	2.65	35×30	2.65							30×40	2.50	35×35	2.50
1500							30×45	2.80	35×35	2.80							30×50	2.76	35×40	2.76
1800							30×50	3.08	35×40	3.08									35×45	3.11
2200									35×45	3.48										

Ripple Current (A r.m.s./120Hz, 105℃)

Case Size φD×L(mm)

chanhvinh.com

chanhvinh.com

Rubycon **LARGE CAN TYPE ALUMINUM ELECTROLYTIC CAPACITORS** **MXG**

◆STANDARD SIZE

WV / Cap (μF) / φD	250										400									
	φ20		φ22		φ25		φ30		φ35		φ20		φ22		φ25		φ30		φ35	
68											20×25	0.49								
82											20×25	0.57	22×25	0.57						
100											20×30	0.70	22×25	0.70						
120											20×35	0.75	22×30	0.75	25×25	0.75				
150											20×40	0.88	22×35	0.88	25×25	0.88				
180													22×35	0.95	25×30	0.95	30×25	0.95		
220	20×25	1.00											22×45	1.10	25×35	1.10	30×25	1.10		
270	20×30	1.10	22×25	1.10									22×50	1.22	25×40	1.22	30×30	1.22	35×25	1.22
330	20×35	1.20	22×30	1.20	25×25	1.20									25×45	1.44	30×35	1.44	35×30	1.44
390	20×40	1.30	22×35	1.30	25×25	1.30									25×50	1.55	30×40	1.55	35×30	1.55
470	20×45	1.40	22×40	1.40	25×30	1.40	30×25	1.40									30×45	1.68	35×35	1.66
560			22×45	1.50	25×35	1.50	30×25	1.50									30×50	1.90	35×40	1.90
680			22×50	1.70	25×40	1.70	30×30	1.70	35×25	1.70									35×45	2.12
820					25×45	2.00	30×35	2.00	35×30	2.00										
1000							30×40	2.20	35×35	2.20										
1200							30×45	2.30	35×35	2.30										
1500									35×45	2.50										
1800									35×50	2.70										

WV / Cap (μF) / φD	420										450									
	φ20		φ22		φ25		φ30		φ35		φ20		φ22		φ25		φ30		φ35	
56											20×25	0.44								
68	20×25	0.50									20×25	0.50	22×25	0.50						
82	20×25	0.64	22×25	0.64							20×30	0.64	22×25	0.64						
100	20×30	0.66	22×25	0.66	25×25	0.66					20×35	0.69	22×30	0.69	25×25	0.69				
120	20×35	0.81	22×30	0.81	25×25	0.81					20×35	0.72	22×30	0.72	25×25	0.72				
150	20×40	0.84	22×35	0.84	25×30	0.84	30×25	0.84			20×45	0.79	22×35	0.79	25×30	0.79	30×25	0.79		
180	20×45	0.91	22×40	0.91	25×30	0.91	30×25	0.91					22×40	0.87	25×35	0.87	30×25	0.87		
220			22×45	1.05	25×35	1.05	30×30	1.05	35×25	1.05			22×50	1.05	25×40	1.05	30×30	1.05	35×25	1.05
270					25×40	1.25	30×30	1.25	35×25	1.25					25×45	1.23	30×35	1.23	35×30	1.23
330					25×50	1.42	30×35	1.42	35×30	1.42					25×50	1.38	30×40	1.38	35×30	1.38
390							30×40	1.61	35×35	1.61							30×45	1.61	35×35	1.61
470							30×45	1.86	35×40	1.86							30×50	1.78	35×40	1.78
560									35×45	2.10									35×45	1.99
680									35×50	2.20										

WV / Cap (μF) / φD	500									
	φ20		φ22		φ25		φ30		φ35	
39	20×25	0.39								
47	20×30	0.46	22×25	0.44						
56	20×35	0.52	22×30	0.51						
68	20×40	0.60	22×30	0.56	25×25	0.55				
82	20×45	0.68	22×35	0.68	25×30	0.64	30×25	0.63		
100			22×40	0.77	25×35	0.74	30×25	0.69		
120			22×50	0.87	25×35	0.81	30×30	0.81	35×25	0.83
150					25×45	0.97	30×35	0.96	35×30	0.98
180					25×50	1.10	30×40	1.07	35×30	1.06
220							30×45	1.22	35×40	1.31
270									35×40	1.43
330									35×45	1.63
390									35×55	1.89
470									35×60	2.11

Ripple Current (A r.m.s./120Hz, 105℃)

Case Size φD×L(mm)