chanhvinh.com

ENGLISH

Product Datasheet

Touch Key Switch

Switch Touch Maintained



IP68

RS, Professionally Approved Products, gives you professional quality parts across all products categories. Our range has been testified by engineers as giving comparable quality to that of the leading brands without paying a premium price.

chanhvinh.com

ENGLISH

Package Contain:

1 x Touch Key Switch

1 x EVA Washer

1 x Nut

Specification:

SWITCH TYPE:		3008232801
POLES:		Vin, Vout, GND
SWITCH FUNCTIONS:		Type: TK04 / Function: NO-NC Latching / Circuit (Illuminated): 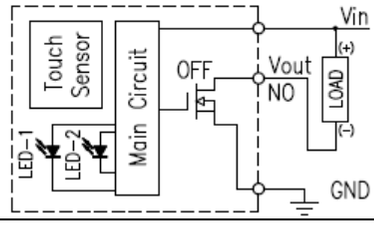
ELECTRICAL & MECHANICAL CHARACTERISTICS	CONTACT RATING:	Max. 1.5A @ 5VDC ~ 30VDC
	ELECTRICAL LIFE:	1 million cycles at full load
	MECHANICAL LIFE:	Min. 1 million cycles without load
	CONTACT RESISTANCE:	120m-ohms max. initial @ 5VDC, 50mA for cable contacts
	LED CURRENT:	Max. 20mA @ 5VDC
	INSULATION RESISTANCE:	Apply 600VDC for 1min±5sec. After which measurement to be made between live parts and dead-metal parts shall result 10M-ohms min.
	OPERATING TEMPERATURE:	-40Celsius degree to +125Celsius degree
	DRY COLD TEST:	Stored at temperature –40 Celsius degree for 96 hours, then left at room temperature for 1 hour before electrical performance is measured. Per IEC 68-2-1
	DRY HEAT TEST:	Stored at temperature +125 Celsius degree for 96 hours, then left at room temperature for 1 hour before electrical performance is measured. Per IEC 68-2-2
	CHANGE OF TEMPERATURE TEST:	Stored at temperature –40 Celsius degree for 3 hours, change of temperature 1 Celsius degree/min. Stored at temperature +125 Celsius degree for 3 hours, total 2 cycles, then left at room temperature for 1 hour before electrical performance is measured. Per IEC 68-2-14
	SALT SPRAY RESISTANCE:	Stored at temperature 35 Celsius degree, and salt solution concentration of 5% with full air temperature 47 Celsius degree and air pressure 1.0kg for 48 hours. The switch shall result no corrosion as well as no apparent changes to its functional performance. Per ASTM-B117
	WATER-PROOF TEST:	(Without load) Protected against water immersion - Immersion for 24 hours at a depth of 1 meter. Per IEC 60529 IP-68
	UV RESISTANCE:	Irradiated UVA-340 distance of 70mm for 360 hours. Per ASTM G154-06

RS, Professionally Approved Products, gives you professional quality parts across all products categories. Our range has been testified by engineers as giving comparable quality to that of the leading brands without paying a premium price.

chanhvinh.com

ENGLISH

	IMPACT RESISTANCE:	Drop of 5kg object from 40cm height, total 3 cycles (20 joules). Per IEC 60529 IK10
MATERIAL CHARACTERISTICS	CASE:	Stainless steel (SUS304)
	HOUSING:	Polycarbonate (UL94 V-0)
	LENS:	Polycarbonate (UL94 V-0)
	KEY:	Stainless steel (SUS304)
	SIGNAL WIRE:	Carbon steel, tin plated
	NUT:	Carbon steel, nickel plated, assembly force 20Nm
	GLUE:	Silicone (UL94 V-0)
	WASHER:	EVA
	CABLE:	Copper & polyvinyl chloride (UL1007)
	PRINTED CIRCUIT BOARD:	Epoxy glass fiber laminate, gold anodized
	ELECTRONIC COMPONENT:	Integrated Circuit Transistor Light-emitting diode (Green & Red) Capacitor Resistor
	SOLDER:	Lead-free tin
PACKAGE	INTERNAL PACKAGING:	1pcs per PE bag above
	RoHS IDENTIFICATIONS:	Bag is attached with a label marking “RoHS”
PRODUCT HANDLING & STORING	The switch is suitable for power rated applications, rating recommendation is per aforementioned (Contact rating section) Problem relates to terminal oxidization can be prevented by storing product in an environment that is dry and cool with the relative humidity less than 90%. Noted, prior to mounting products onto circuit board as well as for unused units, it is recommended to keep them in the tray and vacuum-packed.	

RS, Professionally Approved Products, gives you professional quality parts across all products categories. Our range has been testified by engineers as giving comparable quality to that of the leading brands without paying a premium price.

chanhvinh.com

ENGLISH

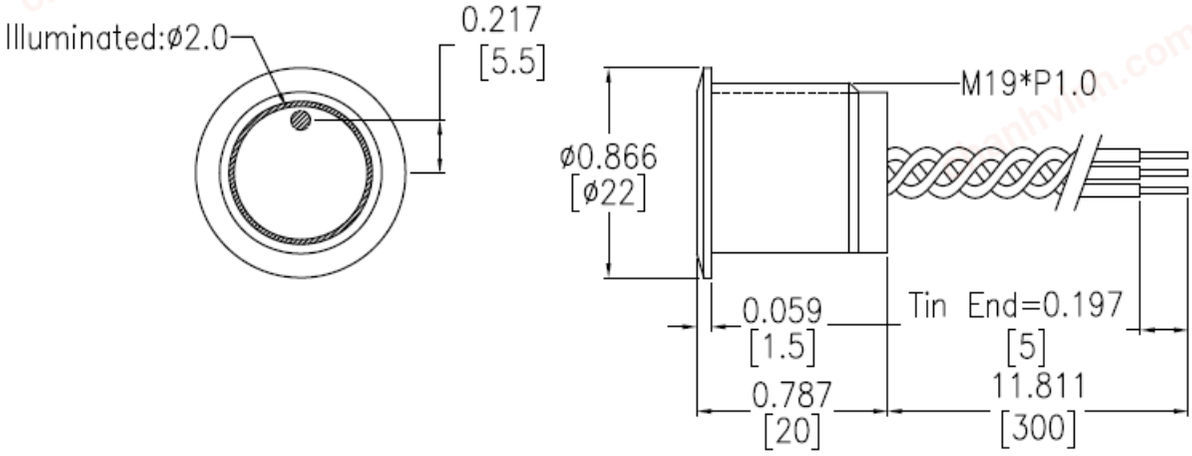

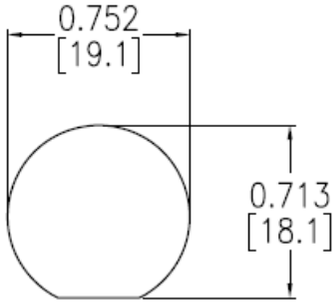

Panel Cutout

Panel Thickness	0.7~10t

TK Series Pin Define				
Cable Position		Power	Load(NO)	Load(NC)
Vin	Red	Vin	Load(+)	Load(+)
Vout(NO)	White		Load(−)	
Vout(NC)	White			Load(−)
GND	Green	GND		

RS, Professionally Approved Products, gives you professional quality parts across all products categories. Our range has been testified by engineers as giving comparable quality to that of the leading brands without paying a premium price.