chanhvinh.com

SPECIFICATION FOR APPROVAL

承　　認　　書

Description	:	**Electret Condenser Microphone**
Kingstate Part No.	:	**KECG3642TF-A**
Customer's Model No.	:	
Specification No.	:	**MKD-7310**
Number Of The Edition	:	**1.1**

CUSTOMER'S APPROVED SIGNATURE		

志豐電子股份有限公司 KINGSTATE ELECTRONICS CORP.

KINGSTATE

Address: 10F, No. 69-11, Sec. 2, Chung Cheng E. Rd., Tamshui County, Taipei Hsien, Taiwan, R.O.C.

International sales dept.: TEL:886-2-2809-5651 FAX:886-2-2809-7151

Domestic sales dept.: TEL:886-2-2809-0668 FAX:886-2-28096748

http://www.kingstate.com.tw

Approved by	Checked by	Issued by
8/15/06	8/15/06	Shen 8/15/06'

chanhvinh.com

A. SCOPE 範疇

This specification applies electret condenser microphone, **KECG3642TF-A**
此規格書適用於電容式麥克風 **KECG3642TF-A**

B. SPECIFICATION 規格

No.	Item	Symbol	Unit	Specification	Condition
1	Directivity 方向性			Omnidirectional 全指向	
2	Sensitivity 靈敏度	**S**	dB	-42 ± 3	f=1KHz, 1Pa 0dB=1V/Pa
3	Standard operating voltage 標準操作電壓	**V**s	V D.C.	3.0	
4	Output impedance 輸出阻抗	**Z**out	KΩ	2.2	f=1KHZ, 1Pa
5	Max operating voltage 最大操作電壓		V D.C.	10	
6	Sensitivity reduction 減電壓靈敏度	△**S-V**s	dB	-3	f=1KHz, 1Pa Vs=3.0V D.C. to 2.0V D.C.
7	Frequency 頻率	**f**	Hz	100 ~ 20,000	
8	Max. current consumption 最大耗電流	**I**DSS	mA	0.5	Vs=3.0V D.C. RL=2.2 KΩ
9	Signal to noise ration 訊號對雜音比	**S/N**	dBA	56	f=1KHz, 1Pa A weighted
10	Operation temp. 操作溫度		℃	-20 ~ +70	
11	Storage temp. 儲存溫度		℃	-20 ~ +70	
12	Dimension 尺寸		mm	ϕ6.0 x 3.6	See appearance drawing 請參照外觀尺寸圖
13	Weight (MAX) 重量		gram	0.30	
14	Material 材質			AL 鋁	
15	Terminal 端子			Terminal	See appearance drawing 請參照外觀尺寸圖
16	Environmental Protection Regulation 環保法規			RoHS	

We use “Pascal (Pa)”indication of sensitivity as per the recommendation of I.E.C.(International Electro technical Commission).The Sensitivity of “Pa” will increase 20dB comparing with “ubar” indication.

Example: -60dB (0dB=1V/ubar) =-40dB (1V/Pa)

依I.E.C.(國際電子協會)建議,以“Pa”為靈敏度標示單位比“ubar” 靈敏度標示單位增加20dB

例如: -60dB (0dB=1V/ubar) = -40dB (1V/Pa)

chanhvinh.com

C. TYPICAL FREQUENCY RESPONSE CURVE 頻率響應曲線

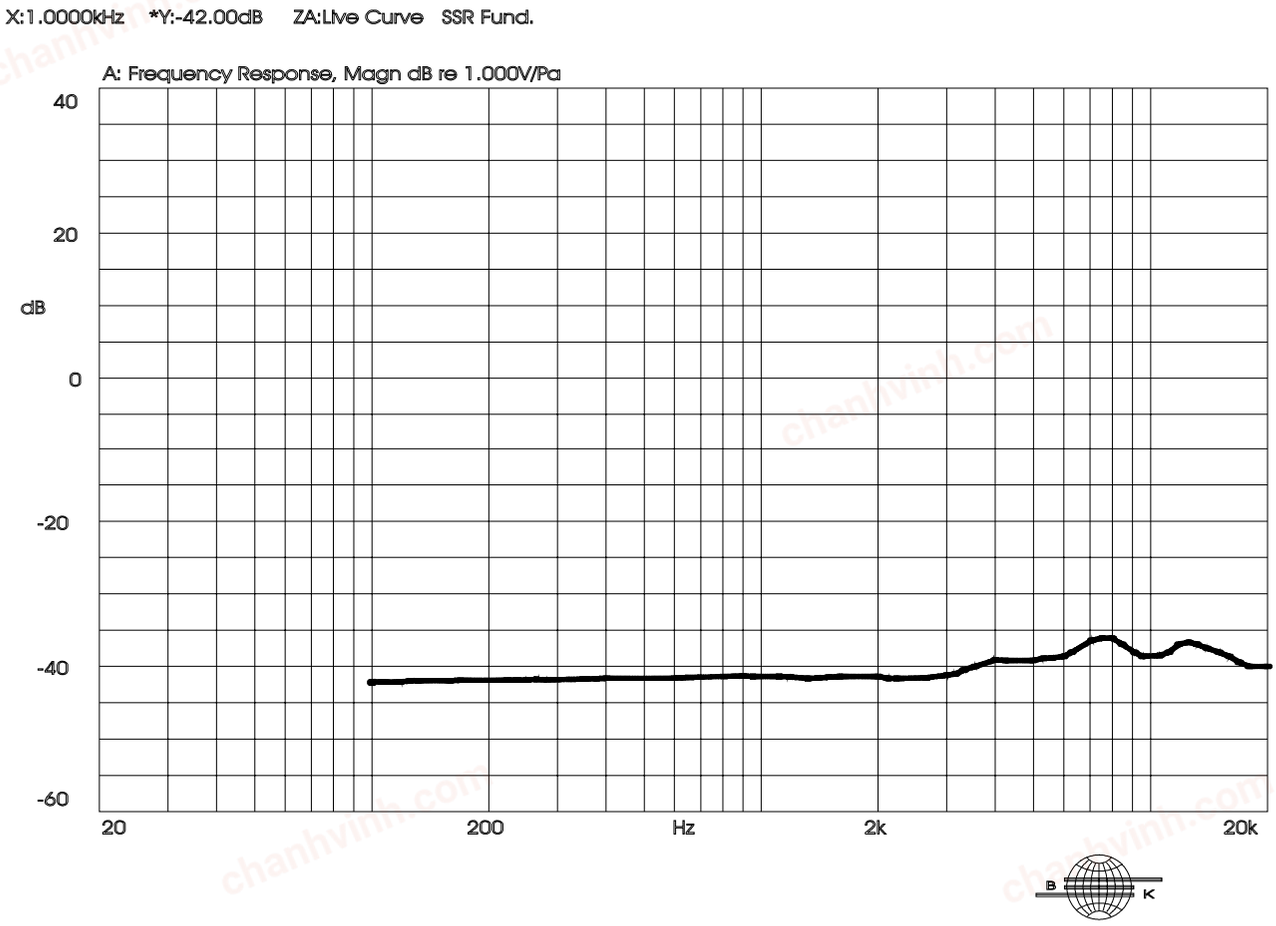

D. APPEARANCE DRAWING
外觀尺寸圖

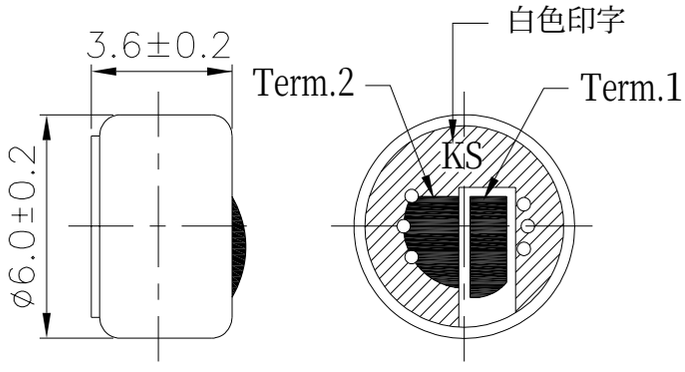

E. MEASUREMENT CIRCUIT
測量線路

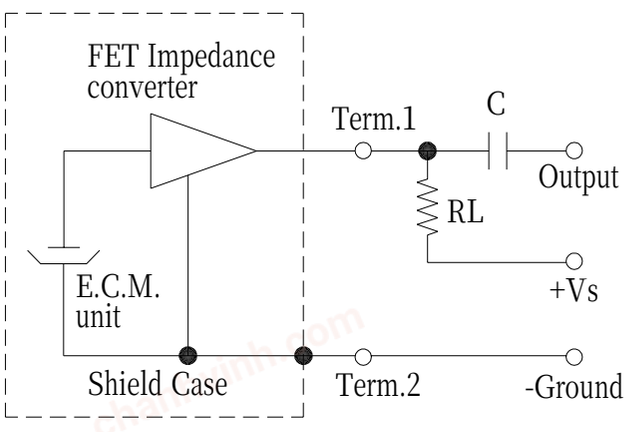

Schematic Didagram

Unit : mm

RL=2.2KΩ

chanhvinh.com

F. MECHANICAL CHARACTERISTICS 機械特性

No.	Item	Test condition	Evaluation standard
1	Soldering Heat Resistance 焊錫耐熱性	Lead terminal are immersed in soldering bath of +270±5℃ for 2±0.5 second. 端子部份浸入以+270±5℃焊錫槽中 2±0.5 秒	No interference in operation 操作上無任何不良
2	PCB Wire Pull Strength PCB 線材拉力	The pull force shall be applied to double lead wire： Horizontal 4.9N(0.5kg) for 30 seconds. 雙線材水平方向施以 4.9N(0.5kg)的力量,30 秒.	No damage and cutting off. 不鬆動,不脫落.
3	Vibration Test 振動測試	The part shall be measured after being applied vibration of amplitude of 1.5mm with 10 to 55hz band of vibration frequency to each of 3 per-pendicular directions for 2 hours. 振動週波數 10 55HZ、全振幅 1.5mm 於 X.Y.Z 3 個方向，各 2 小時	After any tests, the sensitivity to be within ±3dB 測試其靈敏度須與原測試值的差異不超過±3dB.
4	Drop Test 落下測試	The part unit without packaged must be subjected to each 3 drops at three axises from the height of 1 meter to 20 mm thick wooden board. 未包裝麥克風單體從 1 公尺高處，X.Y.Z.3 個方向,各 3 回,落於 20mm 厚木板上.	

G. ENVIRONMENTAL TEST 環境試驗

No.	Item	Test conditions	Evaluation standard
1	High temp. test 高溫測試	After being placed in a chamber at +70℃ for 72 hours. 置於+70℃環境中 72 小時	After any tests, the sensitivity to be within ±3dB of initial sensitivity after 6 hours of conditioning at +25℃ 經測試後麥克風,須靜置於+25℃（室溫）環境中 6 小時後.測試其靈敏度須與原測試值的差異不超過±3dB.
2	Low temp. test 低溫測試	After being placed in a chamber at –20℃ for 72 hours. 置於–20℃環境中 72 小時	
3	Humidity test 相對濕度測試	After being placed in a chamber at +40℃and 90±5% relative humidity for 240 hours. 置於+40℃，相對濕度 90±5%環境中 240 小時	
4	Temp. cycle test 溫度循環測試	The part shall be subjected to 10 cycles. One cycle shall be consist of : 單體承受溫度循環測試 10 次,其循環內容如圖示:	

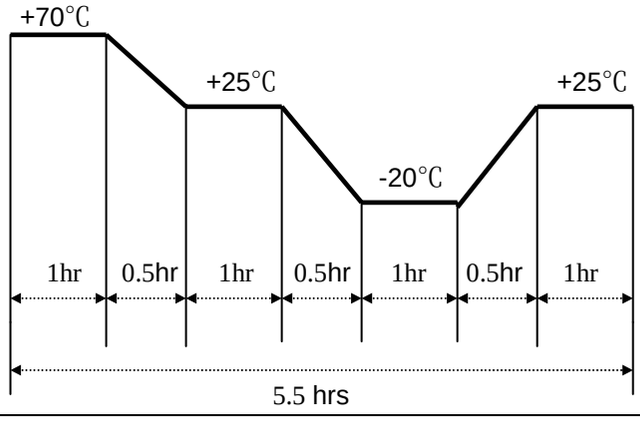

TEST CONDITION.

Standard Test Condition	:	a) Temperature : +5 ~ +35℃	b) Humidity : 45-85%	c) Pressure : 860-1060mbar
一般測試條件	:	a) 溫度 : +5 ~ +35℃	b) 濕度 : 45-85%	c) 氣壓 : 860-1060mbar
Judgement Test Condition	:	a) Temperature : +25 ± 2℃	b) Humidity : 60-70%	c) Pressure : 860-1060mbar
爭議測試條件	:	a) 溫度 : +25 ± 2℃	b) 濕度 : 60-70%	c) 氣壓 : 860-1060mbar

chanhvinh.com

H. PACKING STANDARD 包裝規格

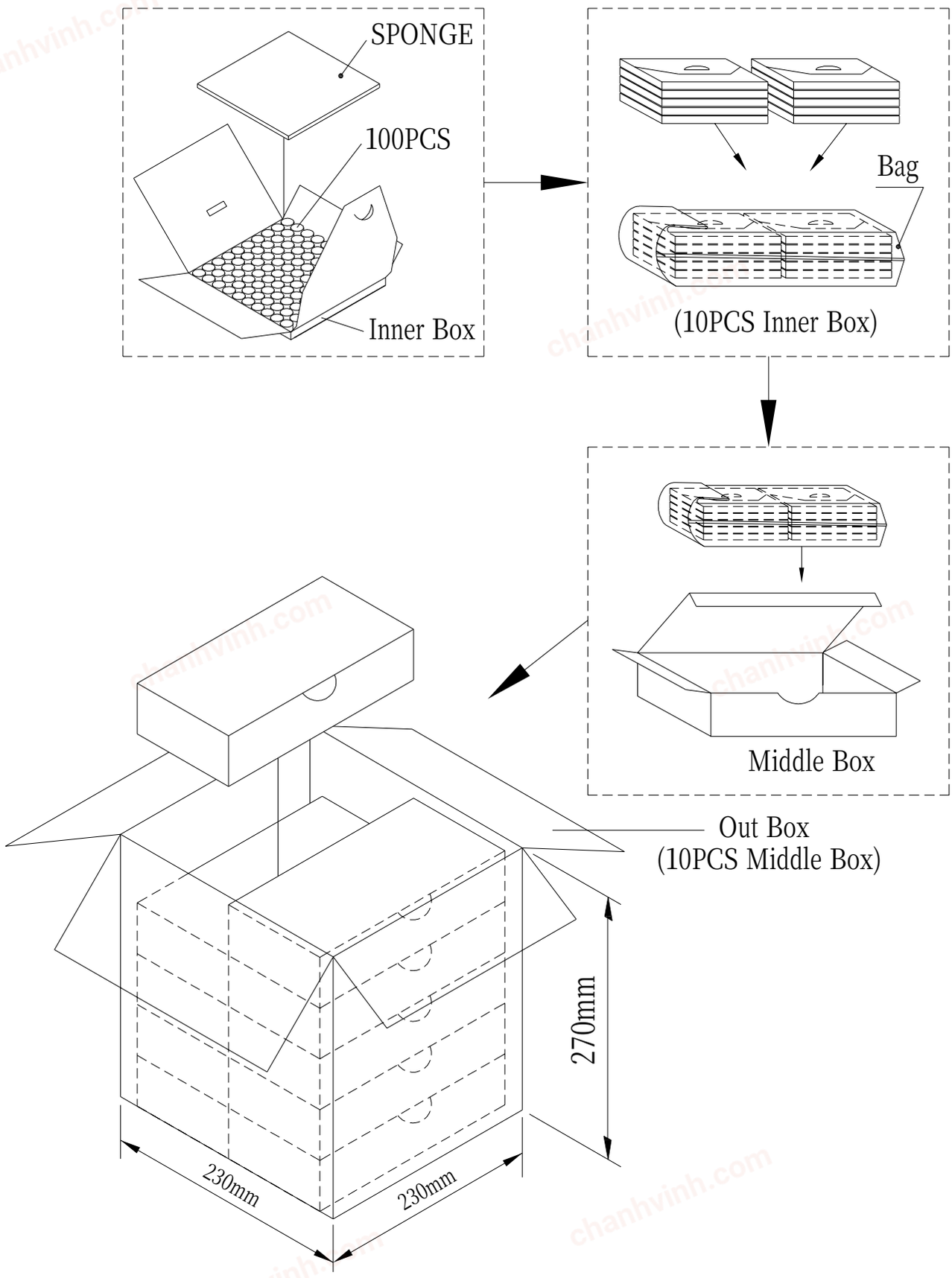

Inner Box	100mmx100mmx8mm	1x100PCS=100PCS
Middle Box	205mmx106mmx52mm	100PCSx10=1,000PCS
Out Box	230mmx230mmx270mm	1,000PCSx10=10,000PCS