chanhvinh.com

ENGLISH

Datasheet

RS Pro 3 → 16 V dc 102dB sound Panel Mount Continuous Internal Piezo Buzzer, 2300 → 3300 Hz

RS Stock No: **754-2015**



Product Details

RS Pro internal piezo buzzer operates at a voltage range of 3 - 16 V dc. This continuous buzzer delivers 102 dB sound at a frequency range of 2300 - 3300 Hz. It is suitable for applications that require high sound output.

Features and Benefits

- Flanged mounting buzzer
- Flying lead connections
- High output levels
- Internal circuitry for dc operation

RS, Professionally Approved Products, gives you professional quality parts across all products categories. Our range has been testified by engineers as giving comparable quality to that of the leading brands without paying a premium price.

chanhvinh.com

ENGLISH

Specifications:

Drive Type	Internal
Mounting Type	Panel Mount
Tone Type	Continuous
Diameter	41.8 mm
Dimensions	41.8 (dia.) x 59.5 x 22 mm
Height	22 mm
Length	59.5 mm
Maximum Frequency	3300 Hz
Maximum Operating Temperature	+85°C
Maximum Supply Voltage	16 V dc
Minimum Frequency	2300 Hz
Minimum Operating Temperature	-30°C
Minimum Supply Voltage	3 V dc
Sound Level	102 dB
Supply Current	40 mA

RS, Professionally Approved Products, gives you professional quality parts across all products categories. Our range has been testified by engineers as giving comparable quality to that of the leading brands without paying a premium price.

chanhvinh.com

ENGLISH

Dimension

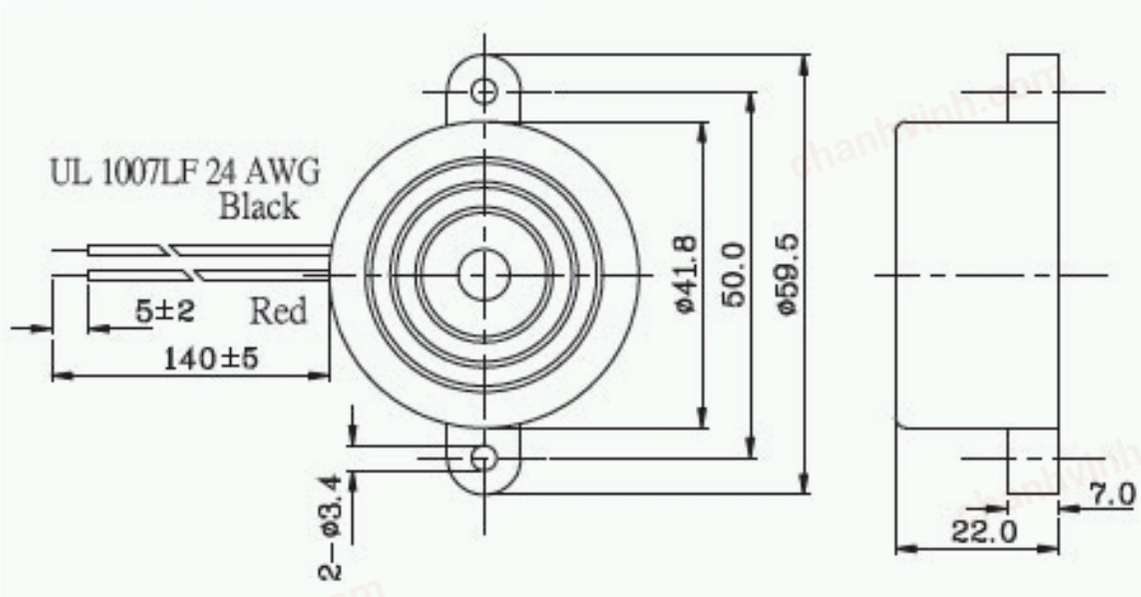

Tol : ±0.5 Unit : mm

Characteristic / Schematic Diagram

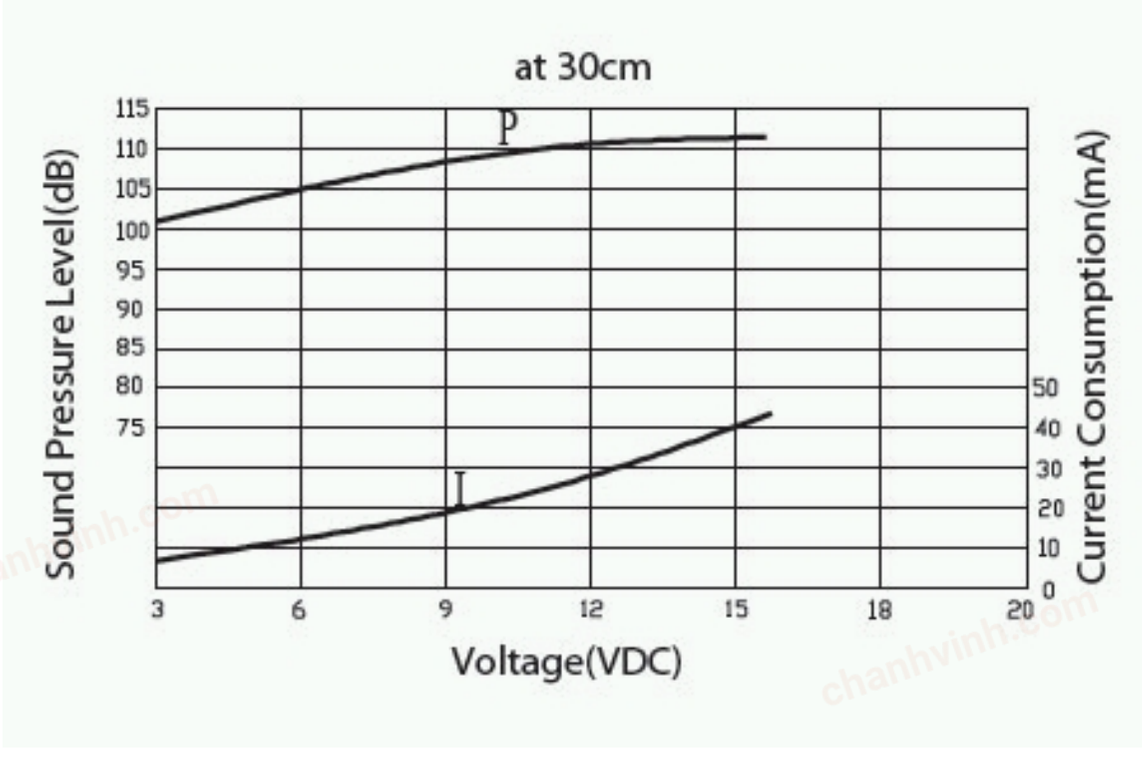

RS, Professionally Approved Products, gives you professional quality parts across all products categories. Our range has been testified by engineers as giving comparable quality to that of the leading brands without paying a premium price.