chanhvinh.com

Rack Case Assembly Guide

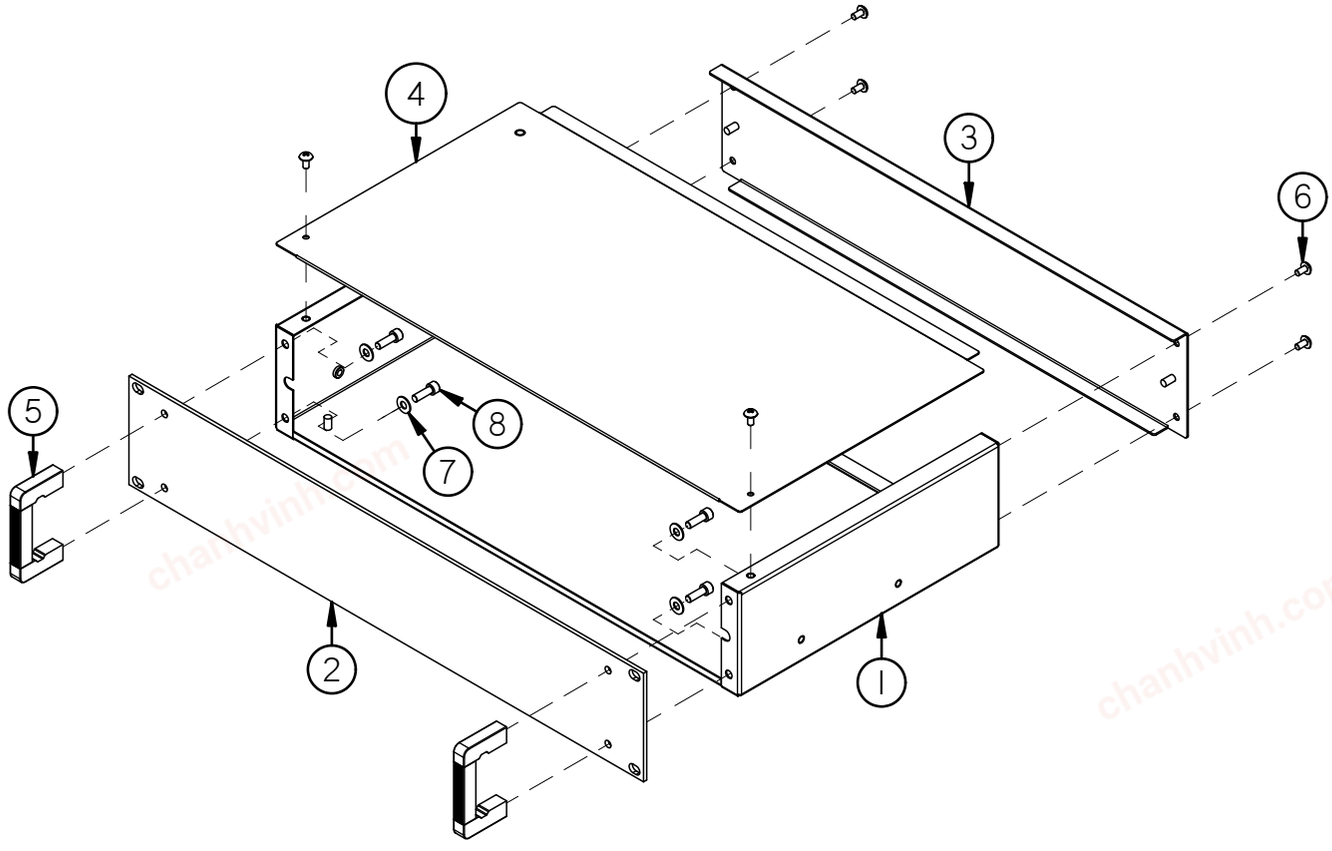

Item	Part Name	Material	Qty.
1	Base	EG 0.90 mm.	1
2	Front Panel	AL 3.00 mm.	1
3	Rear Panel	EG 1.20 mm.	1
4	Unvented Top Panel [not included] -Option	EG 0.90 mm.	1
5	Handle	AL extruded	2
6	Umbrella philips screw M4-8	Steel	6
7	Flat Washer M5	Steel	4
8	Hex socket screw M5-15	Steel	4

chanhvinh.com

1

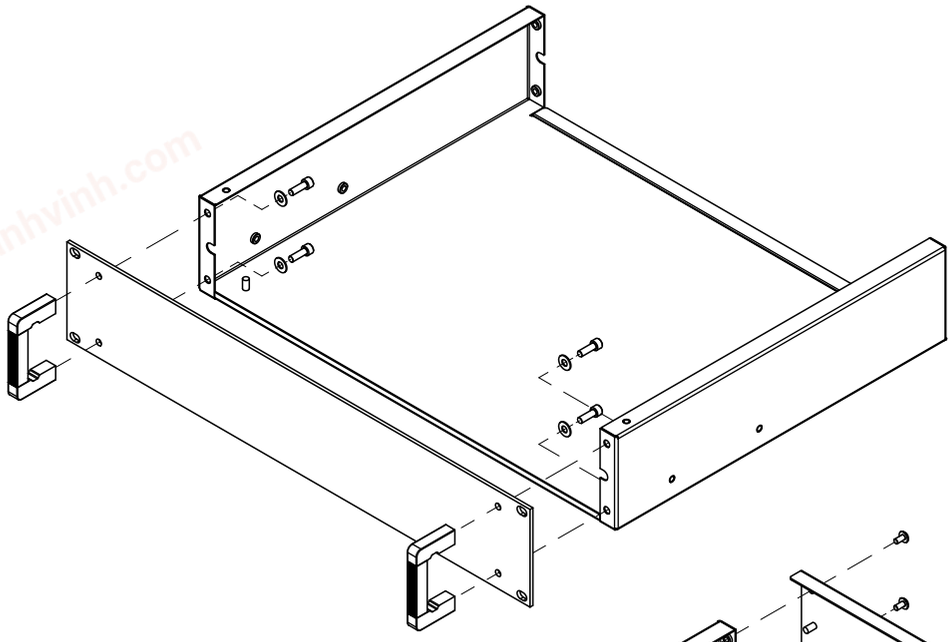

2

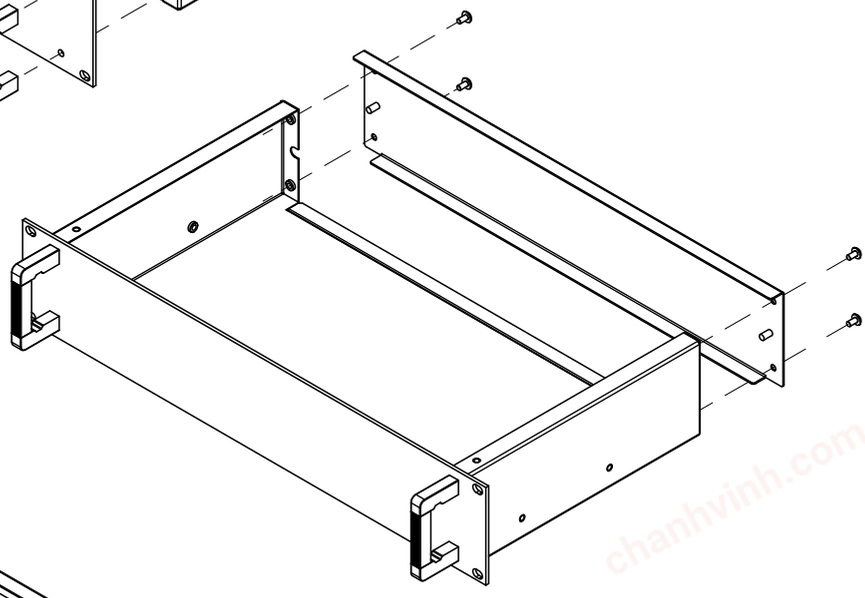

3

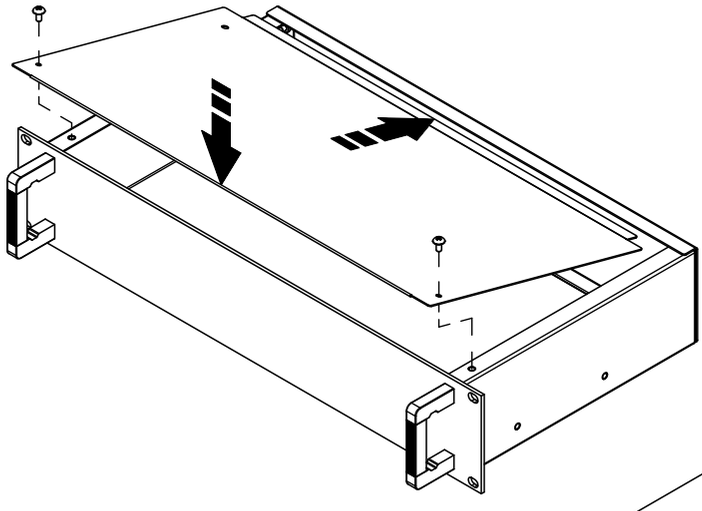

4

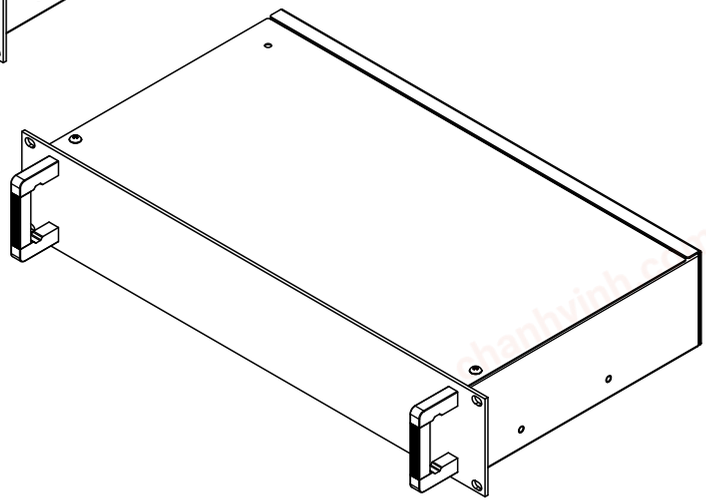

chanhvinh.com

19" Rack installation guide

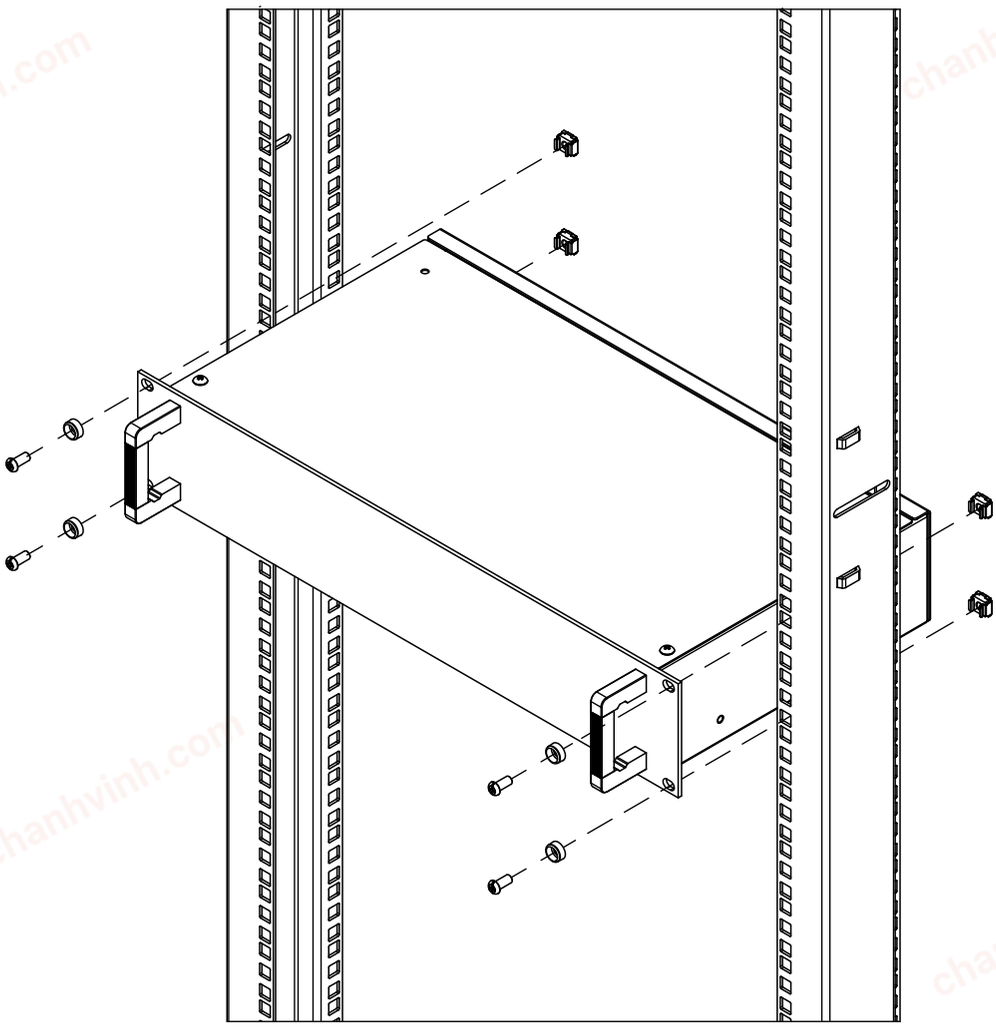

Installation hardware not included

Article #	Description
6657659	Rack case + anodised F/Panel,1Ux250mm
6657668	Rack case + anodised F/Panel,2Ux250mm
6657661	Rack case + anodised F/Panel,2Ux350mm
6657665	Rack case + anodised F/Panel,3Ux250mm
6657674	Rack case + anodised F/Panel,3Ux350mm
6657677	Rack case + anodised F/Panel,1Ux250mm
6657671	Rack case with Black F/Panel,2Ux250mm
6657680	Rack case with Black F/Panel,2Ux350mm
6657683	Rack case with Black F/Panel,3Ux250mm
6657687	Rack case with Black F/Panel,3Ux350mm
Article #	Description [Optional Lid]
6657696	Unventilated top cover, 250mm D Light gry
6657669	Unventilated top cover, 350mm D Light gry
6657693	Ventilated top cover,Light grey 250mm D
6657703	Ventilated top cover,Light grey 250mm D

AVAILABLE DIMENSIONS : 19" RACK CASE + ANODISED
19" RACK CASE WITH BLACK

- HEIGHT : 1U to 3U (B)
- WIDTH : 483 (A)
- DEPTH : 250,350 (D)

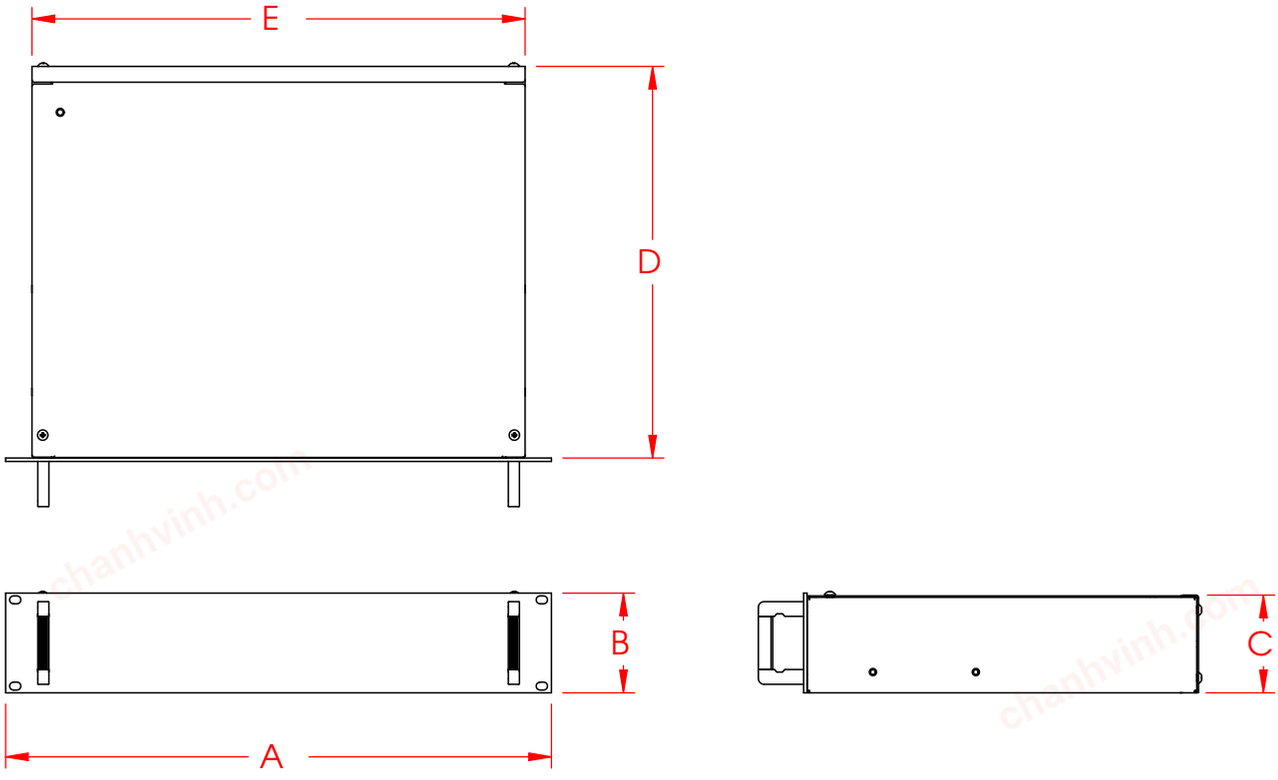

ARTICLE#	MODEL	FRONT PANEL (A+B)	HANDLE HEIGHT	CABINET (E X D X C)
6657659	1U X 250 mm.	483 X 44	25	436 X 246 X 40
6657668	2U X 250 mm.	483 X 88	60	436 X 246 X 84
6657661	2U X 350 mm.	483 X 88	60	436 X 346 X 84
6657665	3U X 250 mm.	483 X 133	90	436 X 246 X 128
6657674	3U X 350 mm.	483 X 133	90	436 X 346 X 128
6657677	1U X 250 mm. BLK.	483 X 44	25	436 X 246 X 40
6657671	2U X 250 mm. BLK.	483 X 88	60	436 X 246 X 84
6657680	2U X 350 mm. BLK.	483 X 88	60	436 X 346 X 84
6657683	3U X 250 mm. BLK.	483 X 133	90	436 X 246 X 128
6657687	3U X 350 mm. BLK.	483 X 133	90	436 X 346 X 128