chanhvinh.com

FEATURES

- 180° rotational head
- Supplied with Die Sets
- Built-in safety valve
- Pressure release lever
- Housed in a moulded plastic carry case
- Comprehensive instructions included
- Cable Range: 6 mm^2 -185 mm^2
- Crimping Force: 50kN
- Rated Operating Pressure: 600bar (8600 psi)

RS PRO Hydraulic Crimping Tool for Tubular Cable Lug

RS Stock No.: 624-1285



RS Professionally Approved Products bring to you professional quality parts across all product categories. Our product range has been tested by engineers and provides a comparable quality to the leading brands without paying a premium price.

Crimp Tools

Product Description

RS PRO brings to you a hydraulic crimp tool, designed for industrial cable assembly applications such as car battery cables. Where conventional crimpers won't do this tool meets the challenge and packs a real punch. This compact hand tool has the benefit of spring-loaded handles, a 180° rotational head and a selection of dies that can be advanced using only one hand leaving the other free to position the cable and connector.

RS PRO Die Sets Available Separately

• RS Stock no: 624-1358, 624-1308, 624-1336, 624-1320

General Specifications

Crimp Tool Type	Hydraulic
Crimp Connector Type	Tubular Cable Lug
Applications	Maintenance and repair, Electrical Installations, Cable assemblies

Mechanical Specifications

Overall Length	386mm
Crimping Dies Included	Dual-size crimp dies with 6+10mm² / 16+25mm² / 35+50mm² / 70+95mm² / 120+150mm² / 185mm²
Wire Size (mm²)	6mm2 -185mm2
Crimping Force	50KN
Rated Operating Pressure	600 bar
Standard Die Length	60mm
Standard Die width	29.9mm
Standard Die Height	11.95mm
Maximum contact diameter	13.85mm

Crimp Tools









Crimp Tools



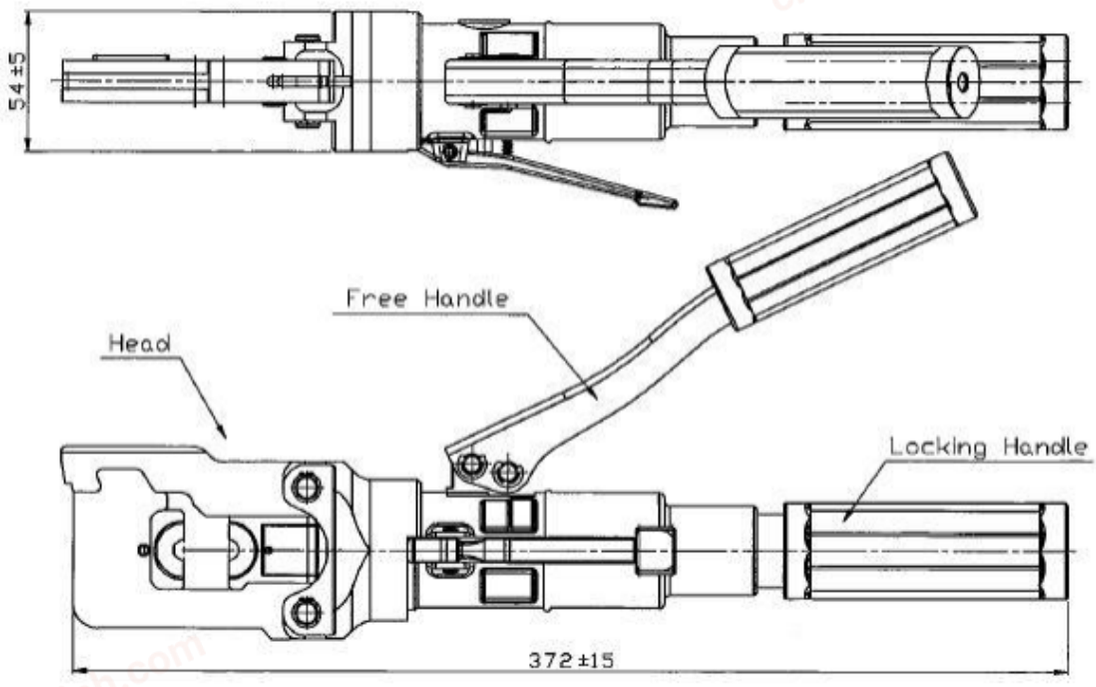

A 60mm
B 29,9mm
C 11,95mm
Crimping dimensions:
S 8,2mm
F 13,85mm

