chanhvinh.com

Internal

Features

- Brighter than standard incandescent bulbs
- Quick and easy installation
- Bright and colour intensive light
- Very low power consumption - very energy efficient
- Temperature range: -25°C to 55°C
- IP Rating: IP65 - from front
- Operational Life: 30,000 hours

RS PRO, Panel Mount Red LED Pilot Light, 22mm Cutout, IP65, 12 V ac/dc

RS Stock No.: 2717486



RS PRO is the own brand of RS. The RS PRO Seal of Approval is your assurance of professional quality, a guarantee that every part is rigorously tested, inspected, and audited against demanding standards. Making RS PRO the Smart Choice for our customers.

Pilot Light Complete Units

Product Description

RS PRO LED tec range of LED indicators use multi-chip technology which provides bright even colour in red, green, yellow, blue and white. The back of panel lock nut fixing and screw clamp terminals of these pilot lights enables easy mounting and connection. This range of LED indicators offers a modern and efficient replacement to traditional 22mm pilot lights.

General Specifications

Pilot Light Colour	Red
Lamp Type	LED
Brightness	≥60cd/m^3
Applications	Automatic equipment, Control panels, Condition panels, Dashboard lights

Electrical Specifications

Type of Voltage	AC/DC
Voltage Rating	12V ac/dc
Frequency	AC 50Hz-60Hz
Terminal Type	Screw
Insulation Withstand	2.5KV (AC) 1 minute
Insulation Resistance	≥2MΩ
Operational Life	30000 hours

Pilot Light Complete Units

Mechanical Specifications

Cutout Diameter	22mm
Mounting Type	Panel Mount

Operation Environment Specifications

Storage Temperature	-25°C to 70°C
Relative Humidity	≤98%

Protection Category

IP Rating (from front)	IP65

Approvals

Compliance/Certifications	RoHS, CE, UKCA, cURus



Pilot Light Complete Units



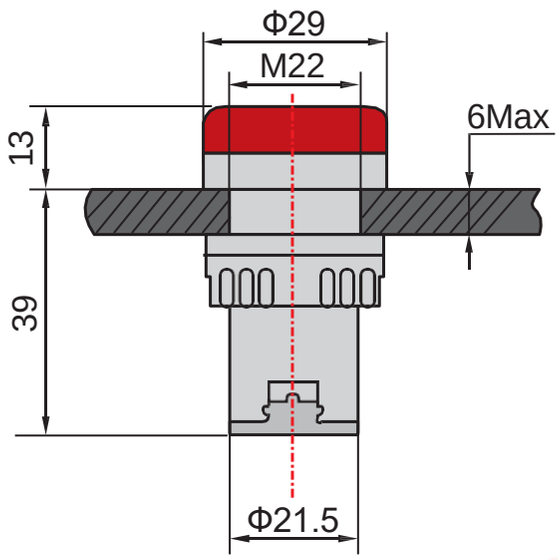

RS Stock Number	Colour	Voltage	Cutout Diameter	Illumination Type	IP Rating	Terminal Type	Mounting Type
2717486	Red	12V	22mm	LED	IP65	Screw	Panel Mount
2717481	Green	12V	22mm	LED	IP65	Screw	Panel Mount
2717492	Yellow	12V	22mm	LED	IP65	Screw	Panel Mount
2717487	Red	24V	22mm	LED	IP65	Screw	Panel Mount
2717482	Green	24V	22mm	LED	IP65	Screw	Panel Mount
2717480	Blue	24V	22mm	LED	IP65	Screw	Panel Mount
2717493	Yellow	24V	22mm	LED	IP65	Screw	Panel Mount
2717488	Red	110V	22mm	LED	IP65	Screw	Panel Mount
2717483	Green	110V	22mm	LED	IP65	Screw	Panel Mount
2717494	Yellow	110V	22mm	LED	IP65	Screw	Panel Mount
2717491	White	230V	22mm	LED	IP65	Screw	Panel Mount
2717489	Red	230V	22mm	LED	IP65	Screw	Panel Mount
2717484	Green	230V	22mm	LED	IP65	Screw	Panel Mount
2717495	Yellow	230V	22mm	LED	IP65	Screw	Panel Mount