chanhvinh.com

ENGLISH

Datasheet
RS PRO



Product Description: Power Inductors

Schematic:



Electrical & Mechanical Specifications

RS Stock Code	Electrical Specifications @25°C					Mechanical Dimensions	
	Ioc in Amps	Inductance @ Rated Current L in µH (Typ)	No Load Inductance (Lo) in µH±15%	DCR in Ω (Max.)	Min. Energy Storage (µJ)*	Coil Size (ODxHt) in mm	Self Lead ø in mm
1048414	0.5	100	109	0.140	12.5	14 x 8	0.40
1048415	0.5	220	258	0.215	27.5	15 x 9	0.40
1048416	0.5	330	393	0.265	41.3	15 x 9	0.40
1048417	1.0	33	37	0.052	16.5	14 x 8	0.50
1048418	1.0	47	53	0.063	23.5	14 x 8	0.50
1048419	1.0	100	127	0.097	50	15 x 8	0.50
1048420	1.0	150	207	0.123	75	15 x 9	0.50
1048421	1.0	220	345	0.196	110	15 x 9	0.45
1048422	2.0	22	27	0.070	44	14 x 8	0.40
1048423	2.0	47	73	0.090	94	14 x 8	0.45
1048424	2.0	68	109	0.089	136	15 x 9	0.50
1048425	3.0	22	34	0.050	99	14 x 8	0.50
1048426	0.5	470	557	0.322	58.8	20 x 9	0.40
1048427	1.0	330	491	0.193	165	20 x 9	0.50
1048428	2.0	100	157	0.109	200	20 x 9	0.50
1048430	3.0	33	49	0.038	149	19 x 8	0.63
1048431	3.0	47	75	0.048	212	20 x 8	0.63

chanhvinh.com

ENGLISH

RS Stock Code	Electrical Specifications @25°C					Mechanical Dimensions	
	Idc in Amps	Inductance @ Rated Current L in µH (Typ)	No Load Inductance (Lo) in µH±15%	DCR in Ω (Max.)	Min. Energy Storage (µJ)*	Coil Size (ODxHt) in mm	Self Lead ø in mm
1048432	1.0	470	601	0.180	235	27 x 13	0.60
1048433	1.0	1,000	1,619	0.426	500	26 x 13	0.50
1048434	2.0	150	207	0.106	300	25 x 12	0.60
1048435	3.0	68	92	0.060	306	25 x 12	0.63
1048436	3.0	100	157	0.080	458	25 x 12	0.63
1048437	3.0	150	256	0.107	675	25 x 12	0.63
1048438	5.0	33	48	0.036	413	25 x 12	0.71
1048439	5.0	47	82	0.043	588	25 x 12	0.75
1048440	5.0	68	137	0.055	850	26 x 12	0.75
1048441	3.0	220	346	0.134	990	29 x 13	0.63
1048442	3.0	330	625	0.142	1485	31 x 15	0.71
1048443	5.0	100	172	0.059	1250	30 x 14	0.80
1048444	7.5	47	84	0.026	1322	31 x 14	1.00
1048445	3.0	470	727	0.187	2115	42 x 14	0.67
1048446	5.0	150	221	0.094	1875	41 x 13	0.71
1048447	10	68	89	0.042	3400	50 x 21	0.90
1048448	10	100	152	0.044	5000	50 x 21	1.00

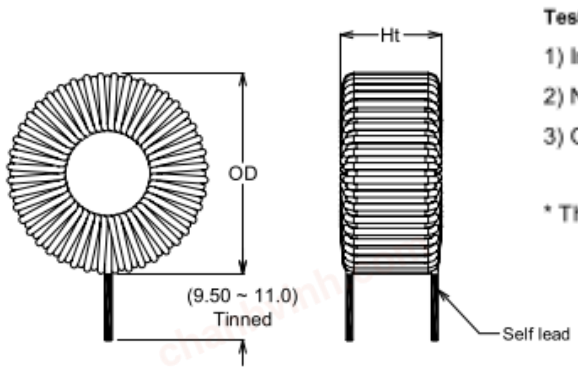

FRONT VIEW ***SIDE VIEW***

Test Frequency:

1) Inductance @ Rated current measured @10KHz/0.10Vrms

2) No Load Inductance measured @10KHz/0.25Vrms

3) Operating Temperature Range -40°C to +125°C

* The µJoule rating ($0.5 \times LI^2$) is the ability of the Inductor to store energy

Unit : mm	Dimension tolerance : ±0.25mm (Unless specified)

Date: 06.07.2016	Issue : 01

chanhvinh.com

ENGLISH

Part Number	I_{DC} Amps	L(µH) Typ. @ Rated Current	L_O (µH) ±15% No Load	DCR (Ohms Max.)	Min. Energy Storage (µJ)*	Wire Ø (mm)	Coil Size mm OD x Ht.	Mounting Style Availability / Size			
								C	B	V	F
1730240	0.5	47	50	0.095	5.9	0.400	14 x 8	2	3	2	2
		68	73	0.115	8.5	0.400	14 x 8	2	3		2
1730209		100	109	0.140	12.5	0.400	14 x 8	2	3	2	2
		150	167	0.173	18.8	0.400	15 x 8	2	3		2
1730206		220	258	0.215	27.5	0.400	15 x 9	2	3	2	2
1730207		330	393	0.265	41.3	0.400	15 x 9	2	3		2
1730240		470	557	0.322	58.8	0.400	20 x 9	3	3	3	3
		680	849	0.398	85	0.400	20 x 10	3	3		3
		1,000	1,358	0.503	125	0.400	21 x 11	3	5	4	3
		1,500	1,863	0.714	188	0.400	25 x 12	5	5	4	4
		2,200	3,131	0.926	275	0.400	25 x 12	5	5	4	4
		3,300	5,024	1.173	413	0.400	26 x 13	5	5		6
		4,700	6,287	1.421	588	0.400	32 x 15	5	8	5	6
	1.0	22	23	0.041	11	0.500	14 x 8	2	3		2
1730225		33	37	0.052	16.5	0.500	14 x 8	2	3	2	2
1730226		47	53	0.063	23.5	0.500	14 x 8	2	3		2
1730063		68	80	0.077	34	0.500	14 x 8	2	3	2	2
1730065		100	127	0.097	50	0.500	15 x 8	2	3		2
1730223		150	207	0.123	75	0.500	15 x 9	2	3	3	2
1730224		220	345	0.196	110	0.450	15 x 9	2	3		2
1730241		330	491	0.193	165	0.500	20 x 9	3	3	3	3
1730047		470	601	0.180	235	0.600	27 x 12	5	5		6
		680	891	0.220	340	0.600	27 x 13	5	5	5	6
1730046		1,000	1,619	0.426	500	0.500	26 x 13	4	5	5	6

chanhvinh.com

ENGLISH

Electrical Specifications @25 °C

Part Number	I_{DC} Amps	L (µH) Typ. @ Rated Current	L_O (µH) ±15% No Load	DCR (Ohms Max.)	Min Energy Storage (µJ)*	Wire Ø (mm)	Coil Size mm O.D. x Ht.	Mounting Style Availability / Size			
								C	B	V	F
1730227		22	27	0.070	44	0.400	14 x 8	2	3	2	2
		33	45	0.089	66	0.400	14 x 8	2	3	2	2
1730242		47	73	0.090	94	0.450	15 x 8	2	3	2	2
1730239		68	109	0.089	136	0.500	15 x 8	2	3	2	2
1730032		100	157	0.109	200	0.500	19 x 8	3	3	3	3
1730036		150	207	0.106	300	0.600	25 x 12	4	5	4	4
	2.0	220	328	0.153	440	0.560	25 x 11	4	5	4	4
		330	575	0.202	660	0.560	26 x 12	4	5	4	4
		470	720	0.214	940	0.600	30 x 14	5	5	5	6
		680	1,251	0.282	1,360	0.600	30 x 14	5	5	5	6
		1000	1,429	0.335	2,000	0.600	42 x 14	--	5	9	--
		1500	2,488	0.441	3,000	0.600	42 x 15	--	8	9	--
		2200	3,218	0.405	4,400	0.710	51 x 22	--	10	--	--
		15	21	0.039	68	0.500	14 x 8	2	3	2	2
		22	34	0.050	99	0.500	14 x 8	2	3	2	2
1730030		33	49	0.038	149	0.630	19 x 8	3	3	3	3
1730031		47	75	0.048	212	0.630	20 x 8	3	3	3	3
1730034		68	92	0.060	306	0.630	25 x 12	4	5	4	4
1730037		100	157	0.080	458	0.630	25 x 12	4	5	4	4
1730040		150	256	0.107	675	0.630	25 x 12	4	5	4	4
1730043	3.0	220	346	0.134	990	0.630	29 x 13	5	5	5	6
1730051		330	625	0.142	1,485	0.710	30 x 14	5	5	5	6
1730054		470	727	0.187	2,115	0.670	42 x 14	--	5	9	--
		680	1,124	0.302	3,060	.0630	42 x 16	--	8	--	--
		1000	1,493	0.304	4,500	0.670	49 x 20	--	10	--	--
		1500	2,324	0.384	6,750	0.670	53 x 24	--	11	--	--
		2200	4,090	0.509	9,900	0.670	54 x 26	--	11	--	--
		15	23	0.029	188	0.600	20 x 8	3	3	3	3
		22	28	0.039	275	0.600	25 x 12	4	5	4	4
1730035		33	48	0.036	413	0.710	25 x 12	4	5	4	4
1730038		47	82	0.043	588	0.750	25 x 12	4	5	4	4
1730039		68	137	0.055	850	0.750	26 x 12	4	5	4	4
1730042		100	172	0.059	1,250	0.800	30 x 13	5	5	5	6
1730053	5.0	150	221	0.094	1,875	0.710	41 x 13	--	5	9	--
		220	381	0.097	2,750	0.800	41 x 13	--	5	9	--
		330	475	0.156	4,125	0.710	49 x 20	--	10	--	--
		470	852	0.187	5,875	0.750	49 x 20	--	10	--	--
		680	1,186	0.196	8,500	0.800	53 x 25	--	11	--	--
		1000	2,093	0.206	12,500	0.900	55 x 26	--	11	--	--
		15	18	0.022	422	0.750	30 x 14	5	5	5	6
		22	30	0.025	619	0.800	30 x 14	5	5	5	6
		33	49	0.025	928	0.900	30 x 14	5	5	5	6
1730048	7.5	47	84	0.026	1,322	1.000	31x 14	5	5	5	6
1730063	10	68	89	0.042	3,400	0.900	50 x 21	--	10	--	--
1730065	10	100	152	0.044	5,000	1.000	50 x 21	--	10	--	--