chanhvinh.com

CSL0902DT1

Data Sheet



【Features】

Size	(L×W×H)	·····	1.6x0.8x1.24	(mm)
Type		·····	Lens type	
Light direction		·····	Top view	
Color		·····	Orange	
IV	(IF=20mA)	·····	Typ. 560	(mcd)
VF	(IF=20mA)	·····	Typ. 2.1	(V)
λD	(IF=20mA)	·····	Typ. 605	(nm)
Viewing Angle 2θ1/2	X-Y	·····	75°	
	X'-Y'	·····	80°	
MSL		·····	Level 3	

【Applications】

Switch backlight
Indicator
Function display
Design

©2025 ROHM Co., Ltd. All rights reserved

chanhvinh.com

[Product Overview]

Set type	:	CSL0902DT1
Label type	:	CSL0902DT1AY
		CSL0902DT1AZ
		CSL0902DT1BA
		CSL0902DT1BB

[Part No. Configuration]

C S L	0 9	0 2	D	T	1	A Y
①	②	③	④	⑤	⑥	⑦

① Series name
② Package shape
③ Control symbol
④ Color (D : Orange)
⑤ Resin color (T : Transparent colorless)
⑥ Packaging type (1 : Cathode at sproket hole side [the top])
⑦ Luminous intensity rank

©2025 ROHM Co., Ltd. All rights reserved

chanhvinh.com

1. CONSTRUCTION — Orange Surface Mount Chip LEDs featuring with lends AlGaInP packed with transparent colorless resin.

2. USAGE [*1] — Consumer ・ Industrial

3. DIMENSIONS — See Figure.1

4. ABSOLUTE MAXIMUM RATINGS [*2]

Power Dissipation	PD (Ta=25℃)	・・・・・・・・・	87mW
Forward Current	IF (Ta=25℃)	・・・・・・・・・	35mA
Peak Forward Current	IFP (Ta=25℃)	・・・・・・・・・	100mA 1)
Reverse Voltage	VR (Ta=25℃)	・・・・・・・・・	12V
Operation Temperature	Topr	・・・・・・・・・	-40～+100℃
Storage Temperature	Tstg	・・・・・・・・・	-40～+100℃

1) Duty 1/10, 1kHz

5. ELECTRO-OPTICAL CHARACTERISTICS (Ta=25ºC)

DESCRIPTION	SYMBOL	CONDITION	MIN.	TYP.	MAX.	UNITS
Forward Voltage 4)	VF	IF=20mA 2)	1.8	2.1	2.5	V
Reverse Current	IR	VR=12V	-	-	10	μA
Luminous Intensity	IV	IF=20mA 3)	355	560	900	mcd
Dominant Wave Length 5)	λD	IF=20mA 3)	602	605	608	nm

2) Lighting time : 1msec 3) Lighting time : 10msec 4) Tolerance : ±3% 5) Tolerance : ±1nm

6. LUMINOUS CLASSIFICATION [*3] (Ta=25℃, IF=20mA)

SYMBOL	LUMINOUS CLASSIFICATION RANGE			
"AY"	355	～	450	mcd
"AZ"	450	～	560	mcd
"BA"	560	～	710	mcd
"BB"	710	～	900	mcd

Tolerance : ±10%

7. PRODUCT WEIGHT — Product weight per piece, approx 0.00204 grm.

8. MSL — Level 3

*1 : If the parts are used for Automotive & Industrial application (base station, smart meters, signal, etc. and social infrastructure), Please contact ROHM, so that Automotive-graded parts will be introduced.

*2 : Absolute maximum rating is the limit which must not be exceeded even for an instant, once exceeded, LED device destruction might occur. This is not the value that guarantees intensity of light life and other reliabilities. Please refer to the derating data [*4] & conducting test data, and make sure to keep the value within absolute maximum rating while using.

*3 : If rank shift occur, we may ask for re-approval of new rank when necessary.

*4 : Even within derating, the reliability and luminosity life may be affected by deterioration of sealing resin and reflector, etc. So please check with your application again.

©2025 ROHM Co., Ltd. All rights reserved

chanhvinh.com

【Figure 1】

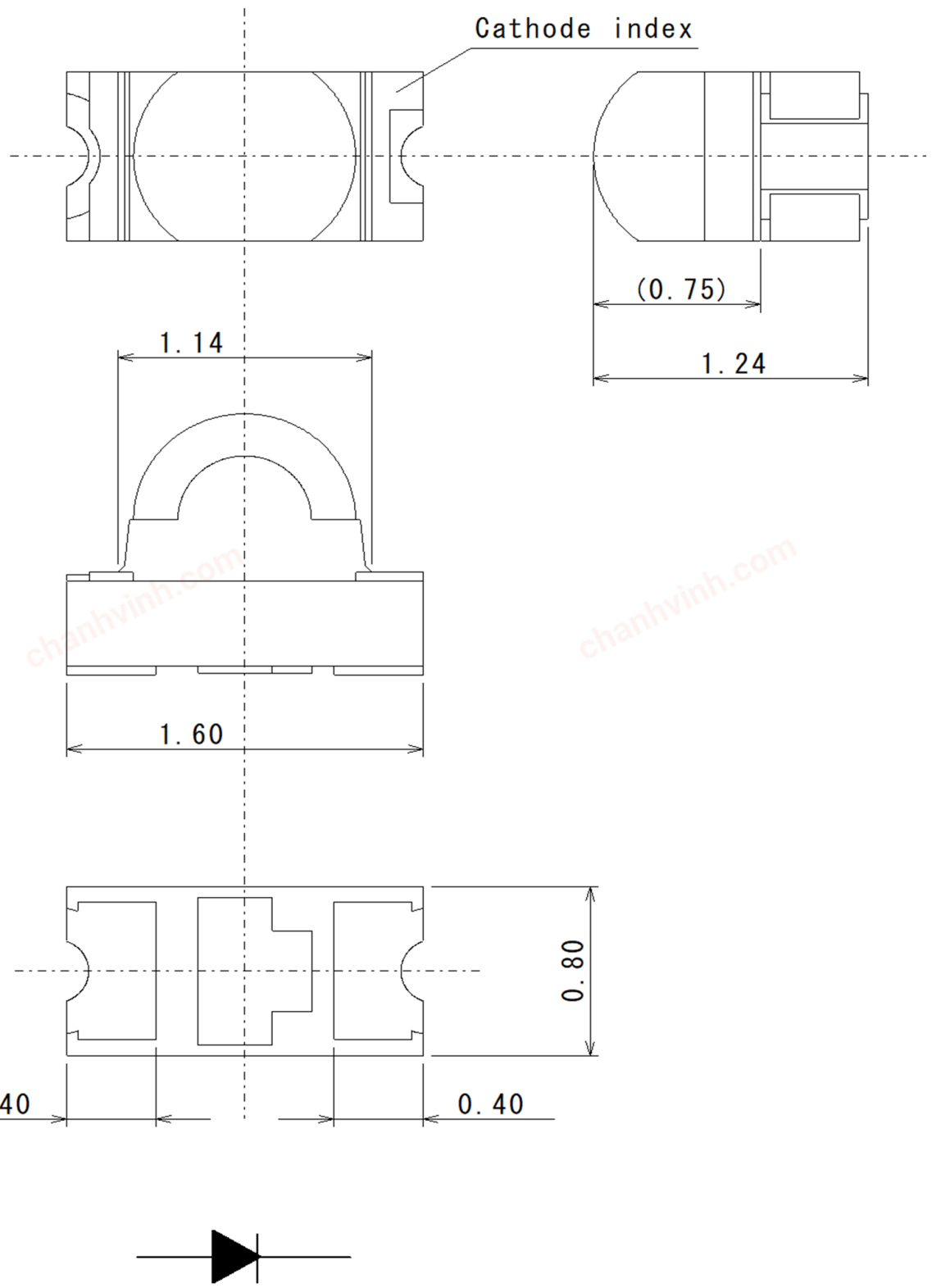

（Unit : mm）
(　　):Reference
(Note) Tolerance is within ±0.1mm unless otherwise specified.

©2025 ROHM Co., Ltd. All rights reserved

chanhvinh.com

【Taping : 1】

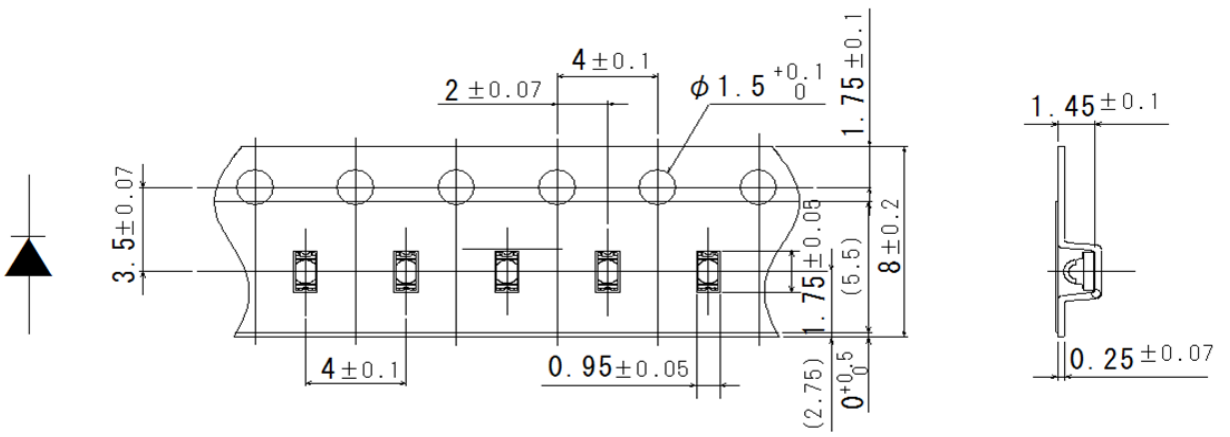

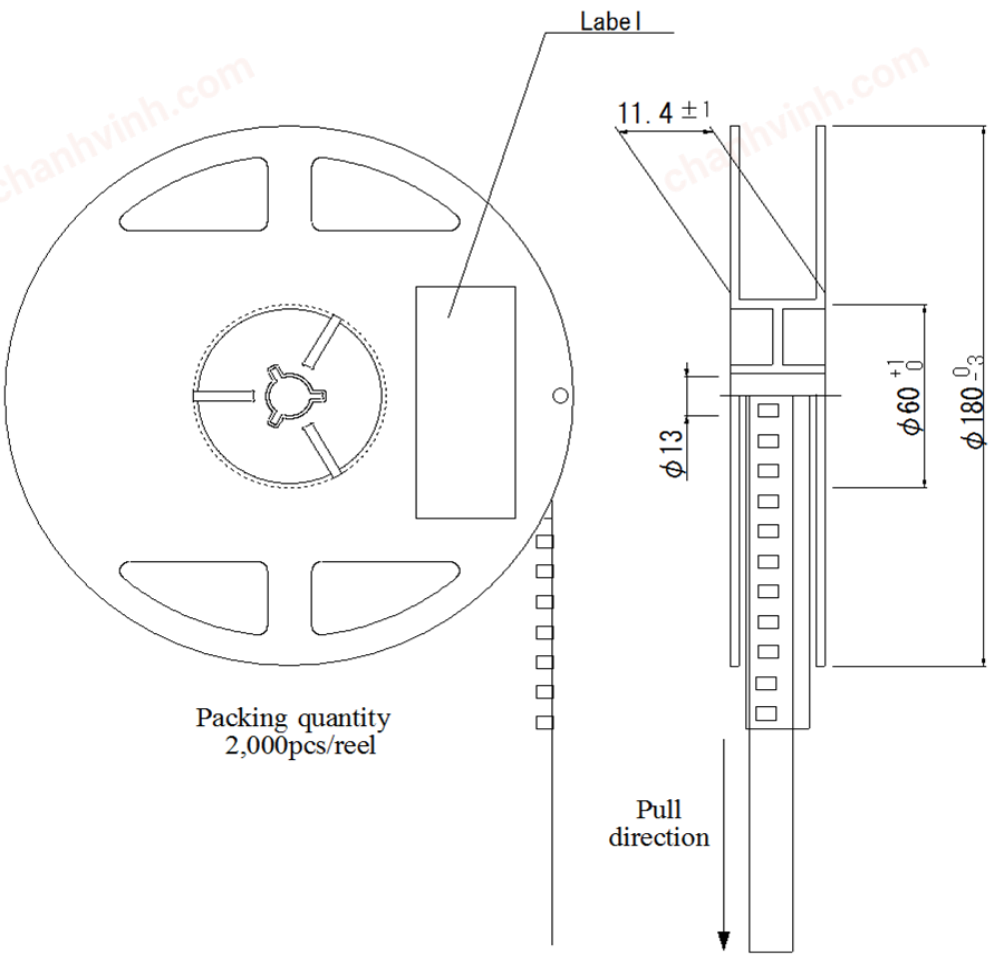

（Unit : mm)
( ):Reference
(Note) Tolerance is within ±0.2mm unless otherwise specified.

©2025 ROHM Co., Ltd. All rights reserved

chanhvinh.com

【STRUCTURE・MATERIAL】

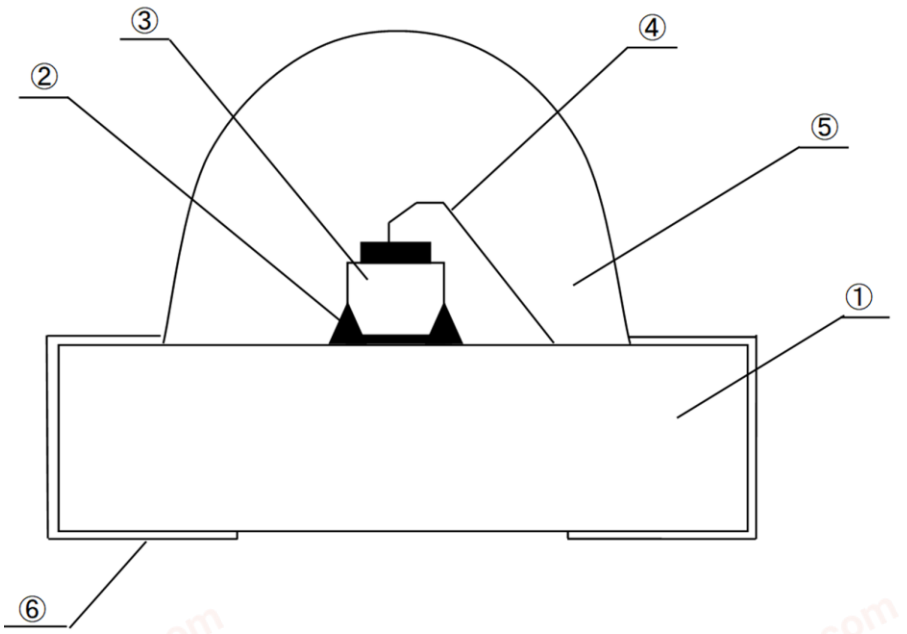

No.	APPELLATION	MATERIAL
①	Printed Wiring Board	Glass epoxy
②	Die Bond	Ag paste
③	LED Chip	AlGaInP
④	Bonding Wire	Gold
⑤	Resin	Epoxy resin
⑥	Electrode	Base plating：Cu,Ni Top plating：Au

©2025 ROHM Co., Ltd. All rights reserved

chanhvinh.com

【PACKAGING REQUIREMENTS】

1. PACKING

(1) One reel is packed in aluminum bag.
The size of aluminum bag is 240(a)×250～280(b)mm.
(2) Aluminum bag is sealed by pressured for all directions.
(3) Insert the moisture indicator card to the aluminum bag.
(4) Print the “Electrical-Static Warning mark”label and
“MSL (Moisture Sensitivity Level : JEDEC compatible”label on the back side of aluminum bag.

【Front side】

Label position (Refer next page) ※Label also attached to reel

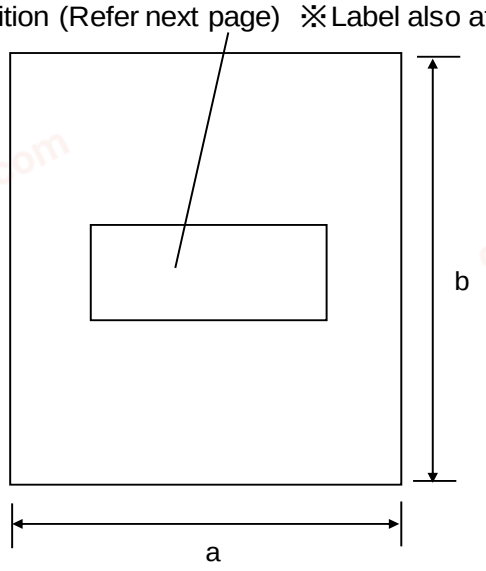

【Back side】

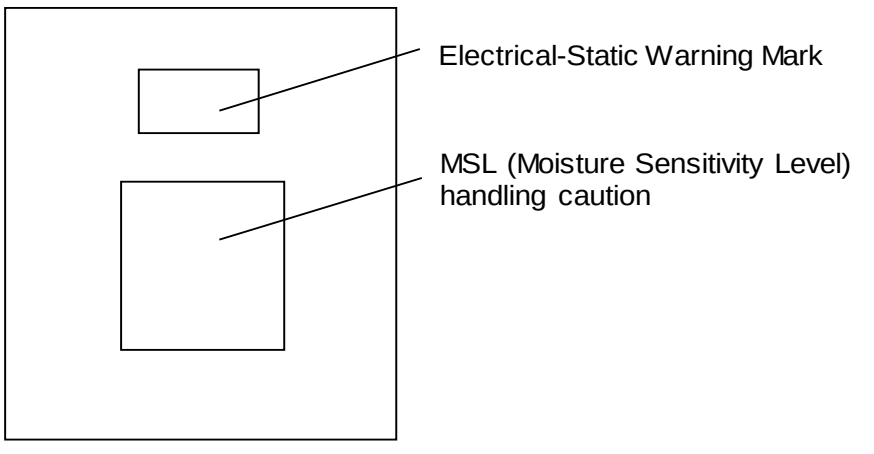

©2025 ROHM Co., Ltd. All rights reserved

chanhvinh.com

2. MARKING

The following information shall be described in the label on the aluminum bag & reel.:
ROHM Type number, Packing quantity, Luminous intensity rank, and Lot number etc.
MSL indications, part numbers, etc. are not marked on the reels.

【FORMER LABEL SPECIFICATION】

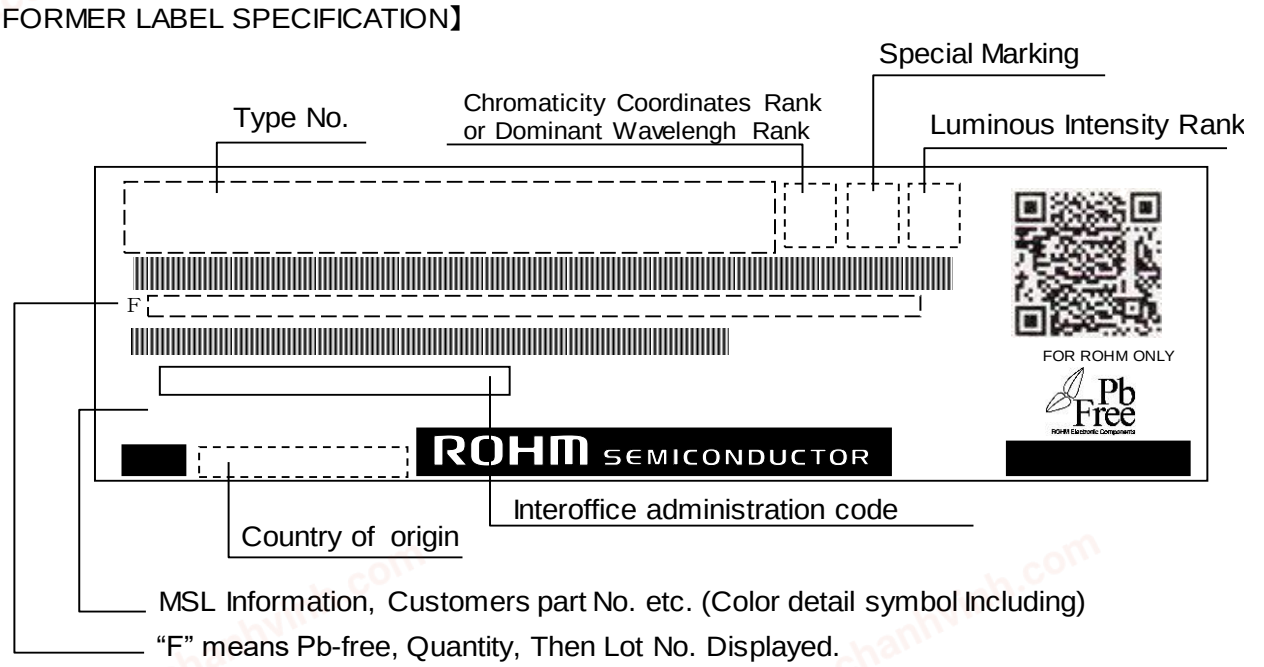

Note) ▮▮▮▮▮▮▮▮▮▮▮▮▮▮▮▮▮▮▮▮ Indicates bar code expressed by code 39.

Pb Free ROHM Electronic Components Indicates Pb-free Products.

【EXAMPLE OF LOT NO. MARKING】

２５	０３	００００１２	W
①	②	③	④

① Production year
② Production week
③ Serial number of lot
④ Production facility symbol (Reference the manufactory list)

©2025 ROHM Co., Ltd. All rights reserved

chanhvinh.com

● Precaution (Surface Mount Device)

1.Storage

If the product is heated during the reflow under the condition of hygroscopic state, it may vaporize and expand which will influence the performance of the product. Therefore, the package is waterproof. Please use the product following the conditions:

・Using Conditions

Classification	Temperature	Humidity	Expiration Date	Remark
①Before using	5～30℃	30～70%RH	Within 1 year from Receiving	Storage with waterproof package
②After opening package	5～30℃	Below 70%RH	Within 168h	Please storing in the airtight container with our desiccant (silica gel)

・Baking

Bake the product in case of below:
①The expiration date is passed.
②The color of 5% and 10% on humidity indicator card is not green.
(Even if the product is before expiration date.)

・Baking Conditions

Temperature	Time	Humidity
60±3℃	12～24h	Below 10%RH
Remark	・Bake products in reel. ・Reel and embossed tape are easy to be deformed when baking, so please try not to apply stress on it. ・Recommend bake once.	

2.Application Methods

2-1.Color of sealing resin

This product may differ in the color of the resin due to the influence of the material contained in the sealing resin. There are no problems with the use.

2-2. Precaution for Drive System and Off Mode

Design the circuit without the electric load exceeding the ABSOLUTE MAXIMUM RATING that applies on the products. If drive by constant voltage, it may cause current deviation of the LED and result in deviation of luminous intensity, so we recommend to drive by constant current. (Deviation of VF value will cause deviation of current in LED.) Furthermore, for off mode, please do not apply voltage neither forward nor reverse. Especially, for the products with the Ag-paste used in the die bonding, there's high possibility to cause electro migration and result in function failure.

2-3. About derating

It is considered that derating characteristics will not result in LED chip's electrical destruction. Even within the derating, the reliability and luminous life can be affected depending on operating conditions and ambient environment. So we would be appreciate it if you can confirm with your application again.

2-4. About product life

Depending on operating conditions and environment(applied current, ambient temperature and humidity, corrosive gas), decreasing of luminosity and change of chromaticity may occur even within the specification conditions. Please contact our sales office if you use it for the following applications.

① It requires long luminosity life
② It is always lit

2-5.Applied Stress on Product

No resin hardening agent such as filler is used in the sealing resin of the product. Therefore, please pay attention to the overstress on it which may influence its reliability.

2-6.Usage

The product is LED. We are not responsible for the usage as the diode such as protection chip, rectifier, switching and so on.

©2025 ROHM Co., Ltd. All rights reserved

chanhvinh.com

3. Others

3-1. Surrounding Gas

Notice that if it is stored under the condition of acid gas (chlorine gas, sulfured gas) or alkali gas (ammonia), it may result in low soldering ability (caused by the change in quality of the plating surface) or optical characteristics changes (light intensity, chrominance) and change in quality of die bonding (Ag-paste) materials. All of the above will cause function failure of the products.
Therefore, please pay attention to the storage environment for mounted product (concern the generated gas of the surrounding parts of the products and the atmospheric environment).

3-2. Electrostatic Damage

The product is part of semiconductor and electrostatic sensitive, there's high possibility to be damaged by the electrostatic discharge. Please take appropriate measures to avoid the static electricity from human body and earthing of production equipment.Especially, InGaN type LEDs have lower resistance value of electrostatic discharge and it is recommended to introduce the ESD protection circuit.The resistance values of electrostatic discharge (actual values) vary with products, therefore, please call our Sales staffs for inquiries.

3-3. Electromagnetic Wave

Applications with strong electromagnetic wave such as, IH cooker, will influence the reliability of LED, therefore please evaluate before using it.

©2025 ROHM Co., Ltd. All rights reserved

chanhvinh.com

4.Mounting

4-1. Soldering

・No resin hardening agent such as filler is used in the sealing resin of the product. Therefore, resin expansion and moisture absorption at humidity will cause heat stress during soldering process and finally has bad influence on the product's reliability.
・The product is not guaranteed for flow soldering.
・Do not expose the product in the environment of high temperature (over 100℃) or rapid temperature shift (within 3℃/sec. of temperature gradient) during the flow soldering of surrounding parts.
In case of carrying out flow soldering of surrounding parts without recommended conditions, please contact us for inquiries.
・Please set appropriate reflow temperature based on our product usage conditions and specification.
・The max for reflowing is 2 times, please finish the second reflow soldering and flow soldering with other parts within the usage limitation after open the moistureproof package.
・Compare with N2 reflow, during air reflow, because of the heat and surrounding conditions, it may cause the discoloration of the resin.
・For our product that has no solder resist, because of its solder amount and soldering conditions, one of its specific characteristics is that solder will penetrate into LED. Thus, there's high possibility that will influence its reliability. Therefore, please be informed, concerning it before using it.

4-2. Automatic Mounting

4-2-1.Suction nozzle

Excessive load may cause damage inside the LED product, so select an optimal suction nozzle according to the material and shape of the LED product.

4-2-2.Mini Package (Smaller than 1608 size)

Vibration may result in low mounting rate since it will cause the static electricity of product and adhere to top cover tape. We recommend to
・set magnet on parts feeder cassette of the mounter to control the product stabilization
・set ionizer to prevent electrostatic charge

4-3. Mounting Location

The stress like bending stress of circuit board dividing after mounting, may cause LED package crack or damage of LED internal junction, therefore, please concern the mounting direction and position to avoid bending or screwing with great stress of the circuit board.

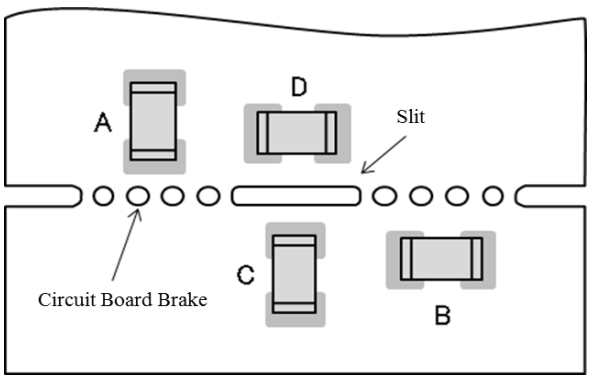

Stress strength according to the mounting position:
A＞B＞C＞D

4-4. Mechanical Stress after Mounting

The mechanical stress may damage the LED after circuit mounting, so please pay attention to the touch on product.

4-5. Soldering Pattern for Recommendation

We recommend the soldering pattern that shows on the right.
It will be different according to mounting situation of circuit board, therefore, please concern before designing.

※The product has adopted the electrode structure that it should solder with back electrode of the product.
Thus, please be informed that the shape of electrode pin of solder fillet formation is not guaranteed.
The through hole on electrode surface is for conduction of front and rear electrodes but not for formation of solder fillet.

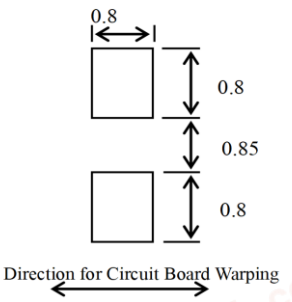

(Unit : mm)

©2025 ROHM Co., Ltd. All rights reserved

chanhvinh.com

4-6. Reflow Profile

For reflow profile, please refer to the conditions below:(※)

・Meaning of marks, Conditions

Mark	Meanings	Conditions
Ts_{max}	Maximum of pre-heating temperature	180℃
Ts_{min}	Minimum of pre-heating temperature	140℃
Ts	Time from Ts_{min} to Ts_{max}	Over 60 sec.
T_L	Reference temperature	230～260℃
t_L	Retention time for T_L	Within 40 sec.
T_P	Peak temperature	260℃(MAX.)
t_P	Time for peak temperature	Within 10 sec.
$\Delta T_R/\Delta t$	Temperature rising rate	Under 3ºC/sec.
$\Delta T_D/\Delta t$	Temperature decreasing rate	Within -3℃/sec.

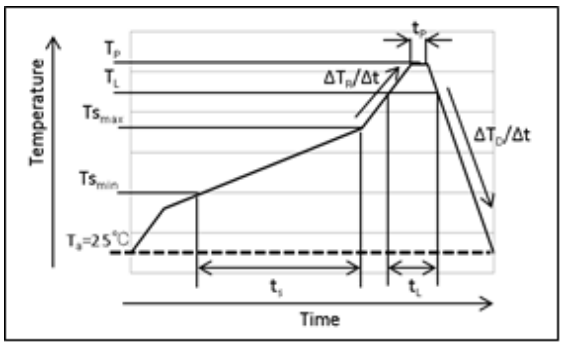

※Above conditions are for reference. Therefore, evaluate by customer's own circuit boards and reflow furnaces before using, because stress from circuit boards and temperature variations of reflow furnaces vary by customer's own conditions.

4-7. Attention Points in Soldering Operation

This product was developed as a surface mount LED especially suitable for reflow soldering.
So reflow soldering is recommended. Incase of implementing manual soldering,
please take care of following points.

① SOLDER USED

Sn-Cu, Sn-Ag-Cu, Sn-Ag-Bi-Cu

②HAND SOLDERING CONDITION

LED products do not contain reinforcement material such as a glass fillers.
So thermal stress by soldering greatly influence its reliability.
Please keep following points for manual soldering.

	ITEM	RECOMMENDED CONDITION
a)	Heating method	Condition) Temp. of iron top less than 400 ℃ within 3 sec, up to 1 time. Heating on PCB pattern, not direct to the LED. (Fig-1)
b)	Handling after soldering	Please handle after the part temp. Goes down to room temp.

Figure-1

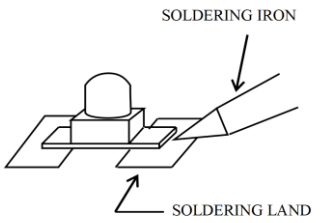

4-8. Cleaning after Soldering

Please follow the conditions below if the cleaning is necessary after soldering.

Solvent	We recommend to use alcohols solvent such as, isopropyl alcohols
Temperature	Under 30℃ within 3 minutes
Ultrasonic Cleaning	15W／Below 1 liter (capacity of tank)
Drying	Under 100℃ within 3 minutes

©2025 ROHM Co., Ltd. All rights reserved

chanhvinh.com

【MANUFACTORY】

FACTORY	SYMBOL
ROHM Wako Co.,Ltd. 100 Tomioka, Kasaoka, Okayama 714-8585 Japan	W
ROHM Electronics (Malaysia) Sdn. Bhd. Lot 1320 Kawasan Perindustrian, Pengkalan ChepaII, Padang Tembak 16100 Kota Bharu, Kelantan, Malaysia	D
ROHM Semiconductor (China) Co.,Ltd. No.7, Weisan Rd, Micro-electronics Ind, Jingang Highway Xiqing Dist, Tianjin 300385	N
HARVATEK CORPORATION（Taiwan OEM) No.18, Lane522, Sec.5, JhonghuaRd, Hsinchu City 300, Taiwan 30094	1

* This sheet is mentioned all factory locations of LED products.
  Please contact us if you need detail information about each package.

©2025 ROHM Co., Ltd. All rights reserved

chanhvinh.com

RELATIVE LUMINOUS INTENSITY - ATMOSPHERE TEMPERATURE

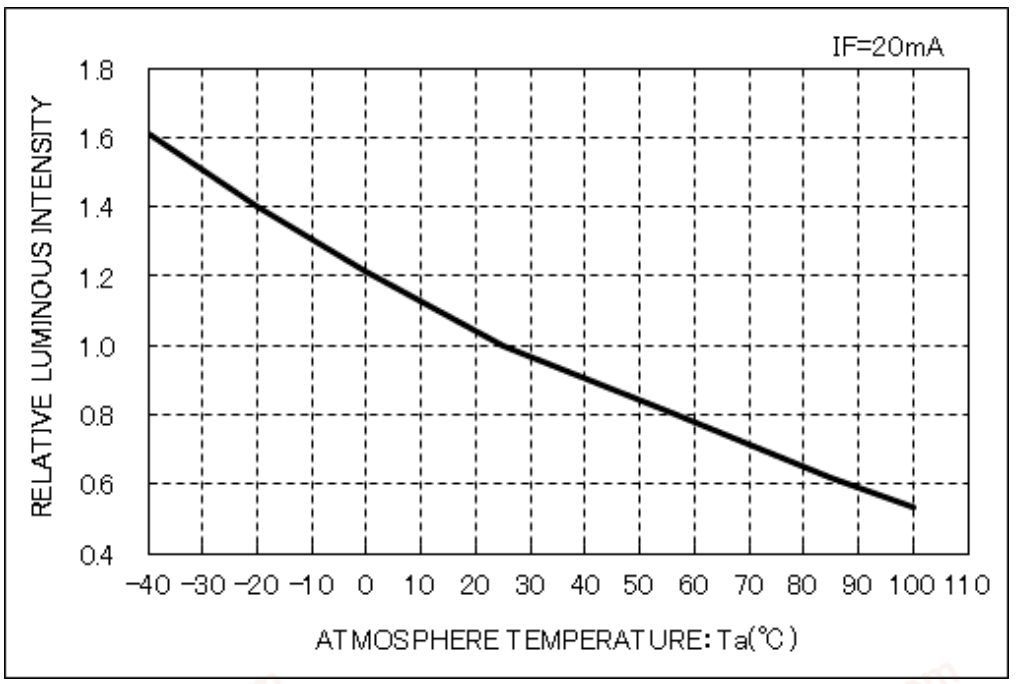

RATIO OF MAXIMUM TOLERABLE PEAK CURRENT - PULSE DURATION

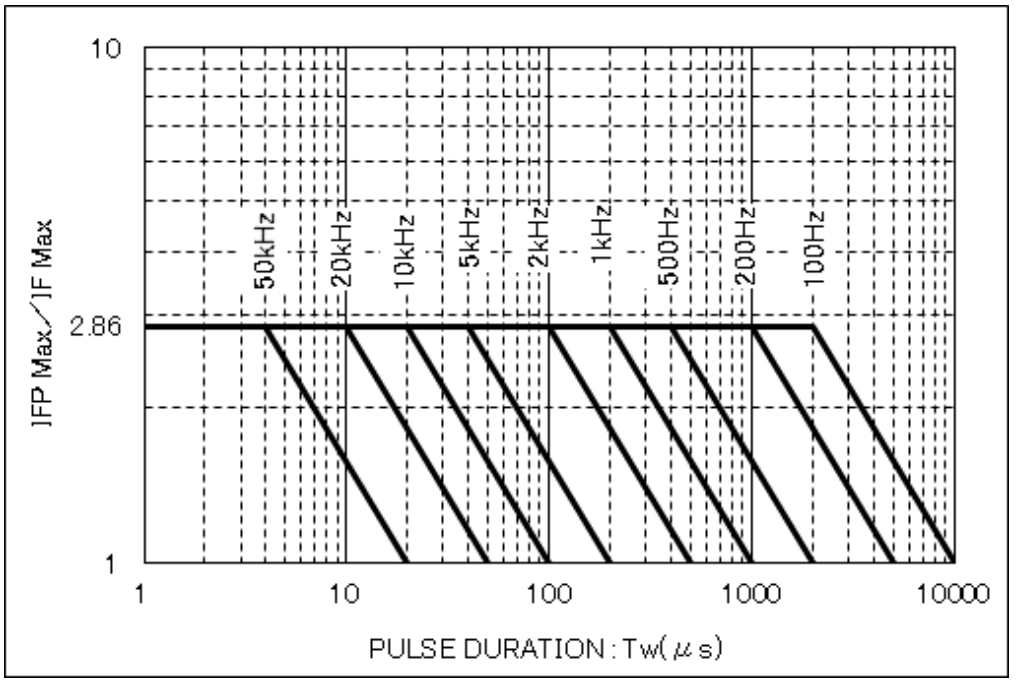

※This data is actual value from specific lot and is not guaranteed.

Reference

©2025 ROHM Co., Ltd. All rights reserved

chanhvinh.com

RELATIVE LUMINOUS INTENSITY - FORWARD CURRENT

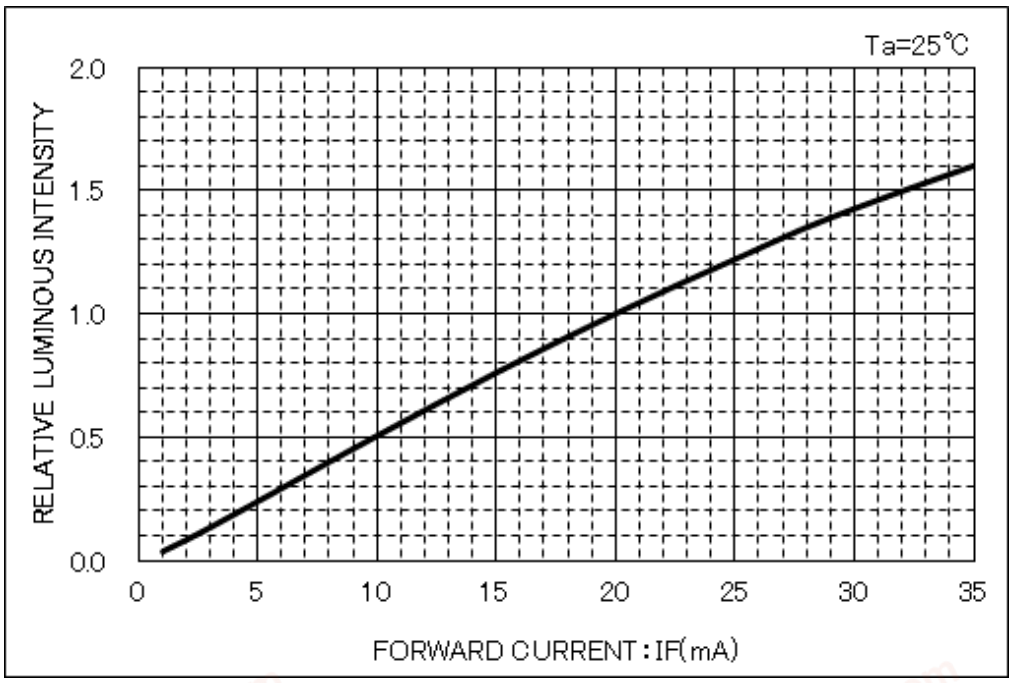

FORWARD CURRENT - FORWARD VOLTAGE

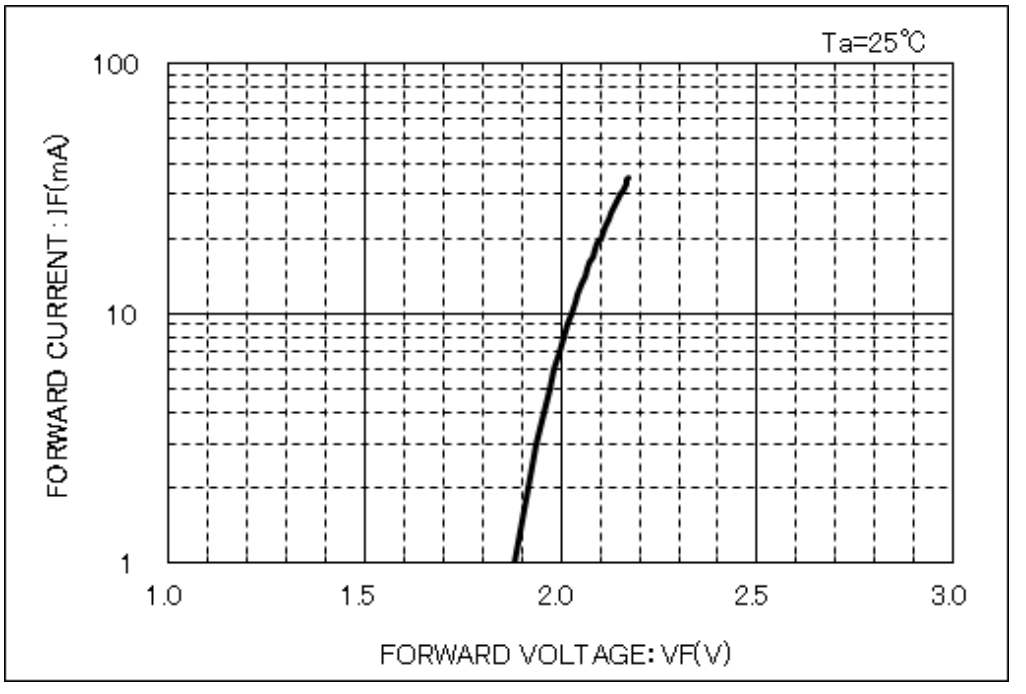

※This data is actual value from specific lot and is not guaranteed.

Reference

©2025 ROHM Co., Ltd. All rights reserved

chanhvinh.com

FORWARD CURRENT - DOMINANT WAVELENGTH

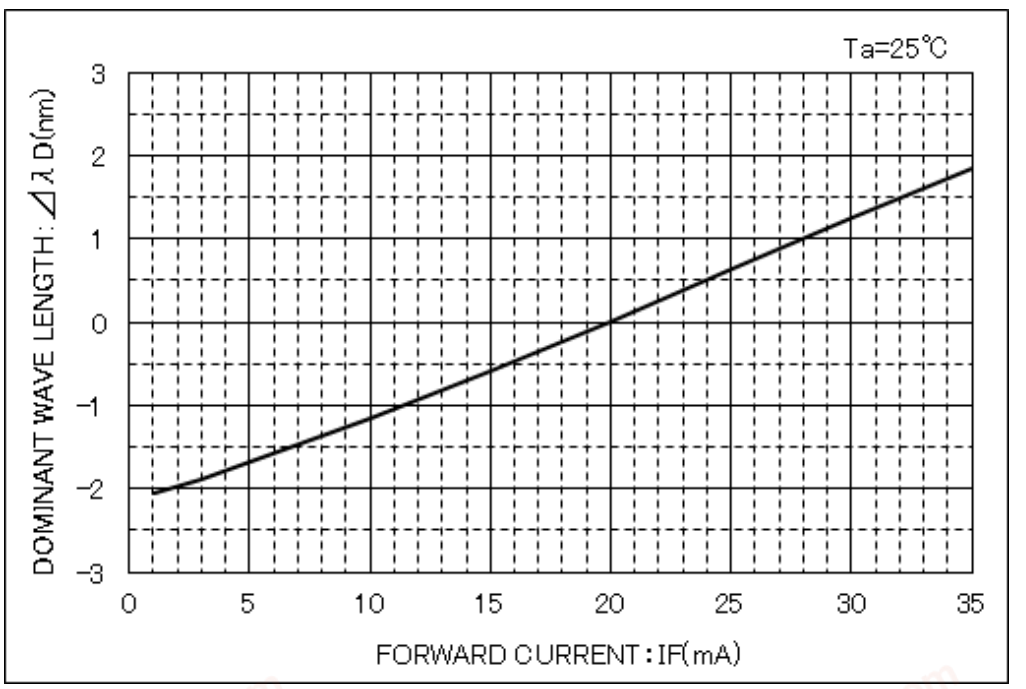

ATMOSPHERE TEMPERATURE - DOMINANT WAVELENGTH

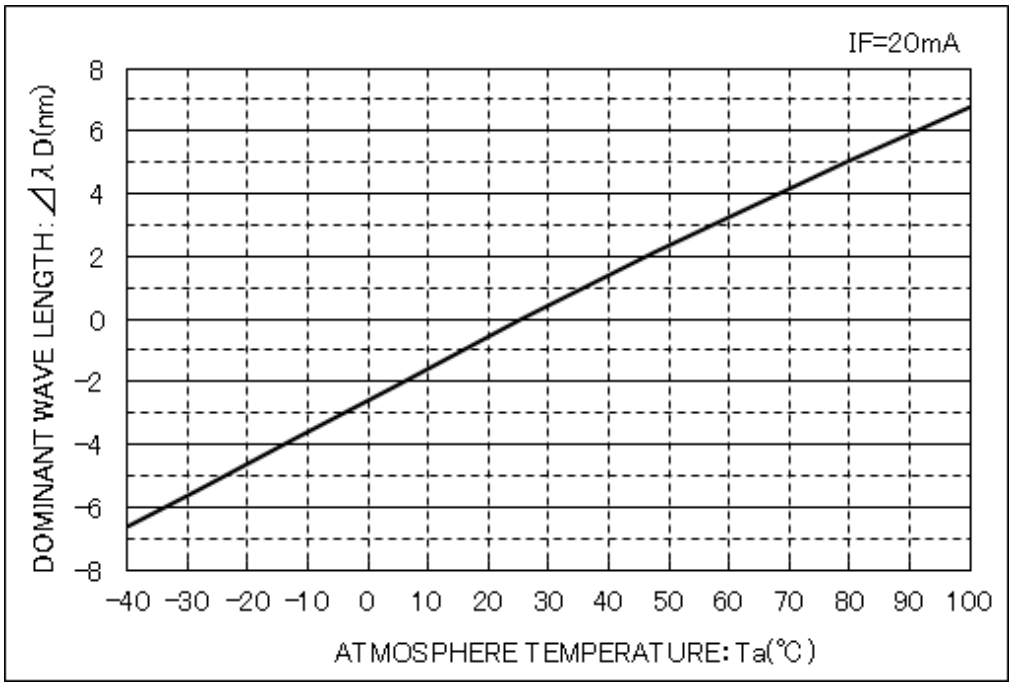

※This data is actual value from specific lot and is not guaranteed.

Reference

©2025 ROHM Co., Ltd. All rights reserved

chanhvinh.com

FORWARD VOLTAGE - ATMOSPHERE TEMPERATURE

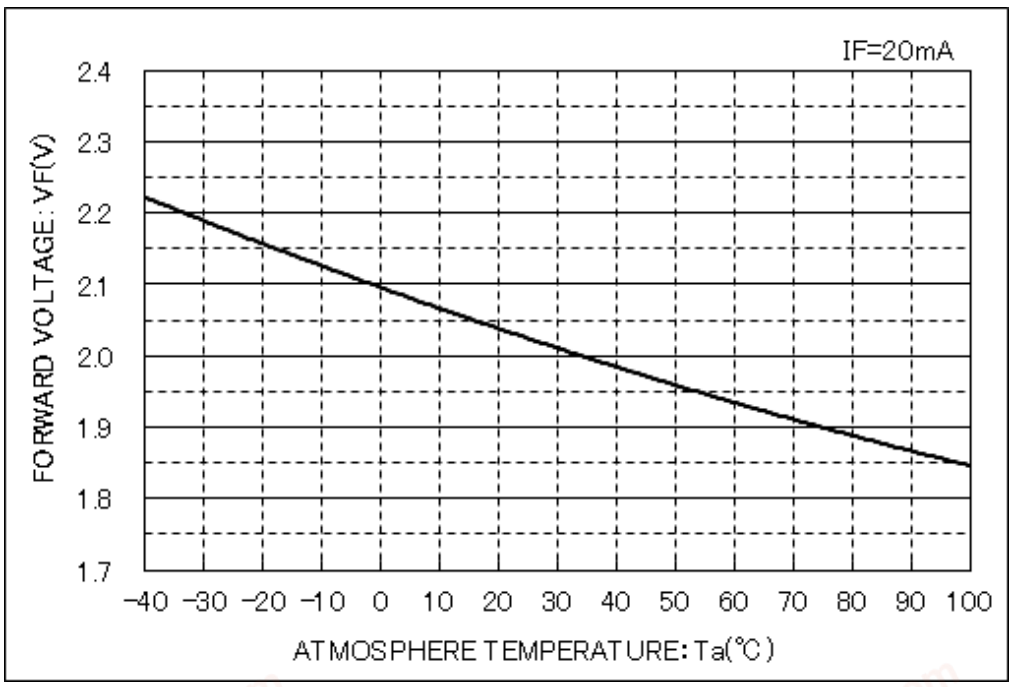

SPECTRUM

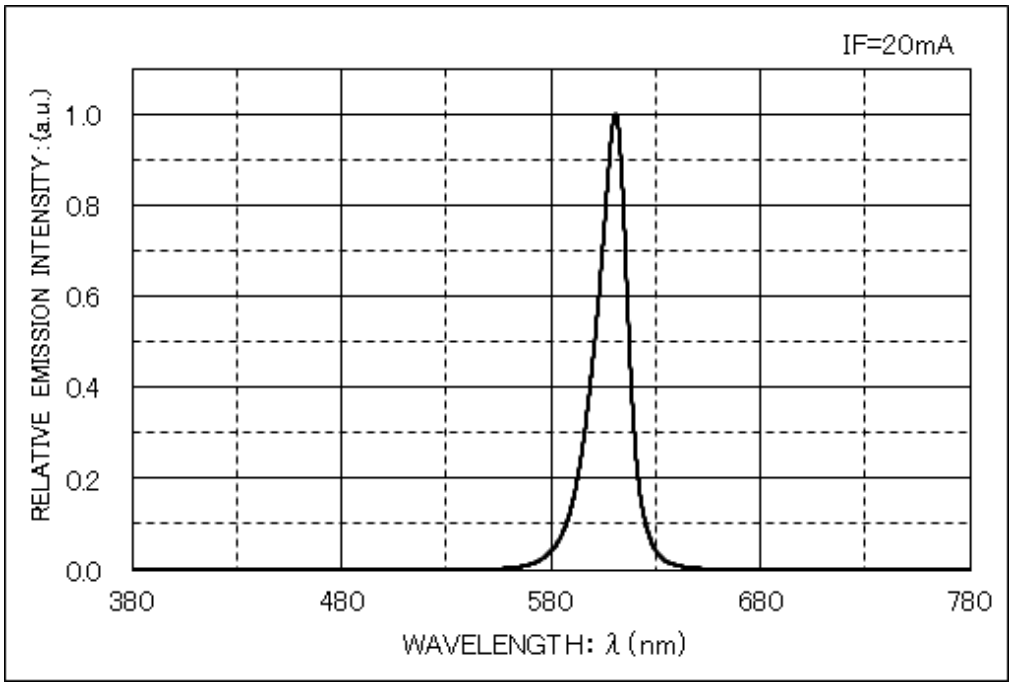

※This data is actual value from specific lot and is not guaranteed.

Reference

©2025 ROHM Co., Ltd. All rights reserved

chanhvinh.com

DERATING ※1、※2

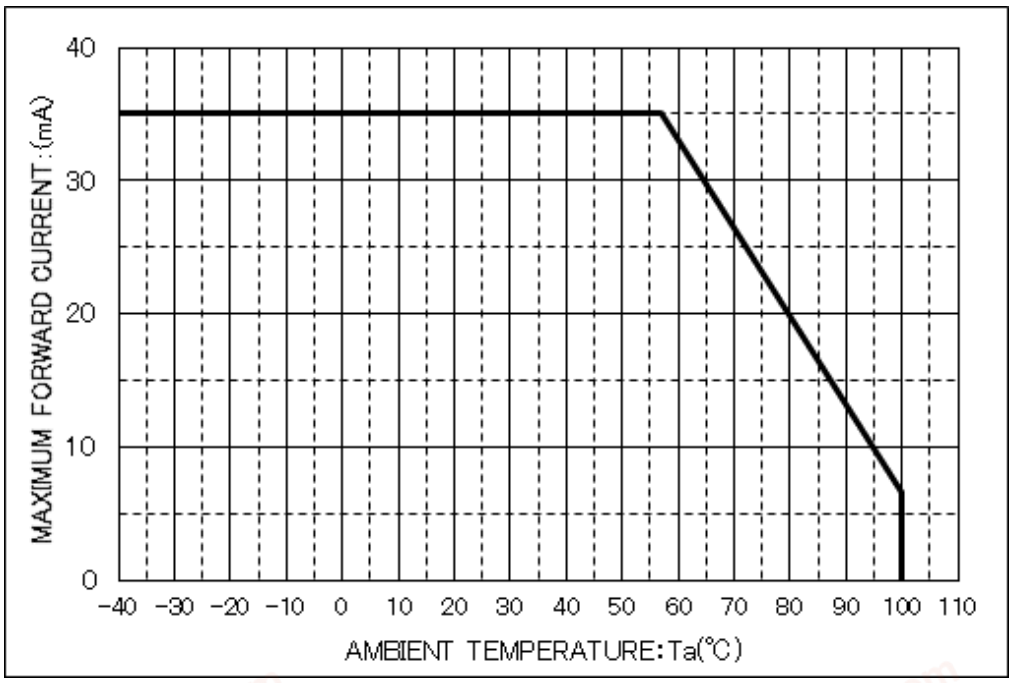

THERMAL RESISTANCE(JUNCTION/SOLDER POINT)※1

Rθj-s ・・・ 430℃/W

THERMAL RESISTANCE(JUNCTION/AMBIENT)※1

Rθj-a ・・・ 600℃/W

JUNCTION TEMPERATURE

TjMax ・・・ 110℃

※1:【Evaluation board】
Glass epoxy(FR4) : 30x10mm,t=1.6mm
Pad Size(Cu) : 4.0x4.0mm(Cathode),t=0.07mm

※2 : Even within derating, the reliability and luminosity life may be affected by deterioration of sealing resin and reflector, etc. So please check with your application again.

※This data is actual value from specific lot and is not guaranteed.

Reference

©2025 ROHM Co., Ltd. All rights reserved

chanhvinh.com

RELATIVE LUMINOUS INTENSITY - VIEWING ANGLE

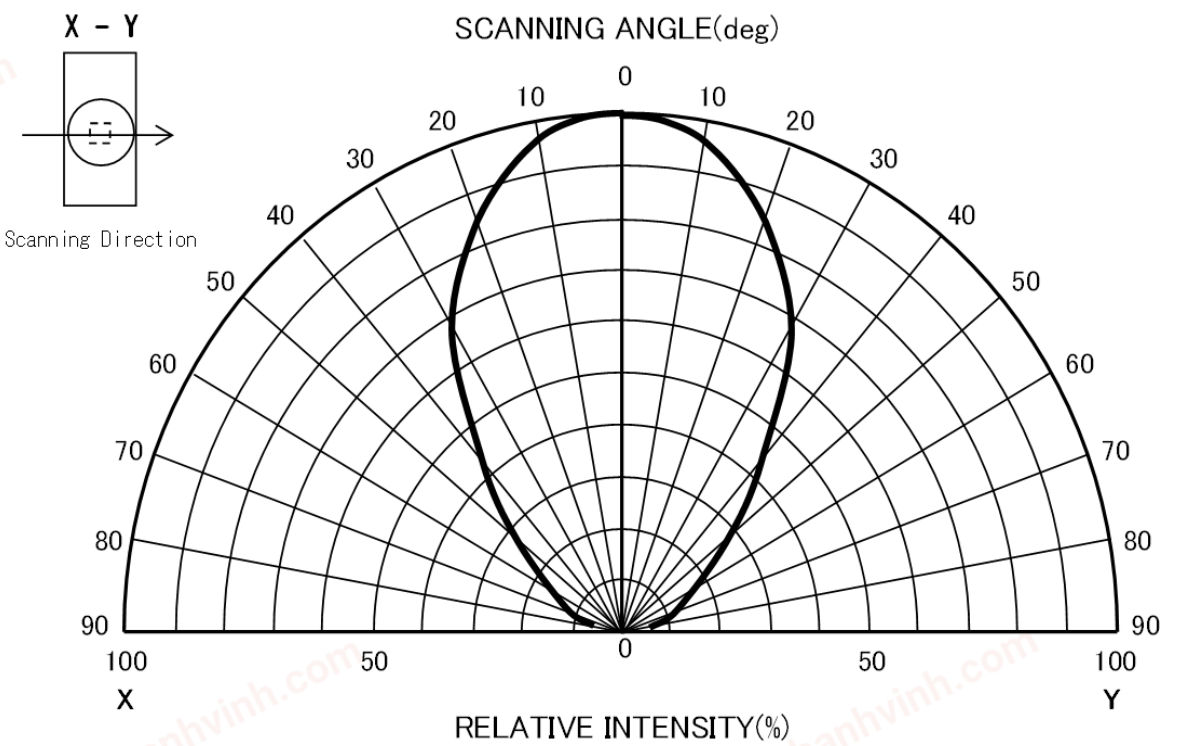

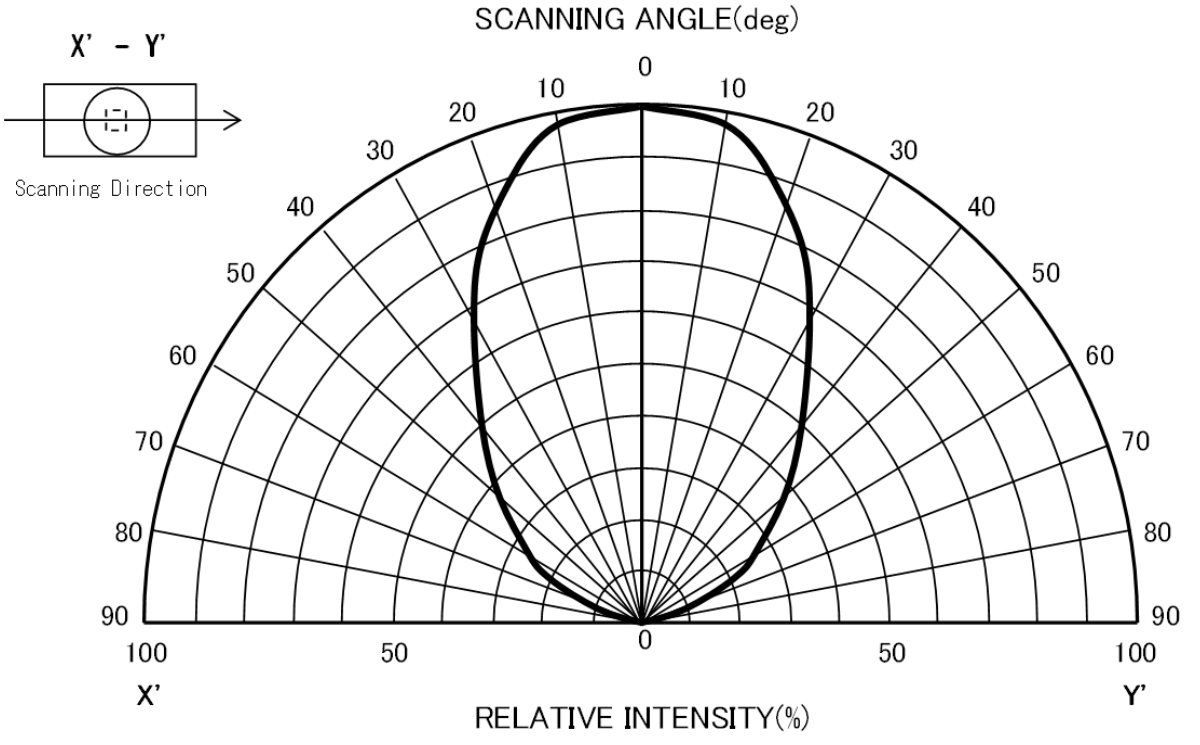

※This data is actual value from specific lot and is not guaranteed.

Reference

©2025 ROHM Co., Ltd. All rights reserved

chanhvinh.com

【Reliability Test Result】

1.Test Result

Test Items	Reference STD	Test Condition	n (pcs)	Pn (pcs)
Solder Heat Resistance for Reflow Soldering	J-STD-020D-01	Prtreatment : Temperature Humidity Strage (30ºC/70%RH/168hr) Reflow Peak Temp. : 260ºC 10sec Over 230℃/60sec Preheat : 140 to 180ºC 60sec Number of reflow : 2 times	22	0
Solderbility	JESD22-B102E	Immerse into rosin flux for 5±1sec,and the device for 3±0.5sec into Pb-free solder bath at 245±5ºC	22	0
Drop test	JEITA ED-4701 A-124	H=75cm Maple Boad : 3 times	22	0
Vibration	JEITA ED-4701 A-121	100～2000Hz 98.1m/s^2 2hours each on each direction of X,Y,Z	22	0
Thermal Cycle	JESD22-A104E	Ta=Tstg Min.ºC(30min.) ～ Tstg Max.ºC(30min.) 100cycle	22	0
High Temperature Strage	JESD22-A103E	Ta=Tstg Max.+5ºC/-0ºC 1000hrs	22	0
High Temperature High Humidity Strage	JEITA ED-4701 B-121	Ta=85±2ºC 85±5%RH 240hrs	22	0
Low Temperature Strage	JESD22-A119A	Ta=Tstg Min.±5ºC 1000hrs	22	0
Load Life	JESD22-A108D	Ta=25±5ºC IF=IFMax. 1000hrs	22	0

2.Failure Criteria

Items	Condition	Criteria
Luminous Intensity	IF=20mA	60% of the initial value
Forward Voltage	IF=20mA	Changing rate of ±10%
Reverse Current	VR=VR Max.	Maximum of specification
Appearance	Visual Check	No major change in appearance

Solderbility	More than 95% of the electrode must be covered with solder.

※This data is actual value from specific lot and is not guaranteed.

©2025 ROHM Co., Ltd. All rights reserved

chanhvinh.com

【Electric Static Discharges（ESD）】

1.Human Body Model

Based Standard	JS-001-2014	Criteria	VR=5V, IR≦ Spec Max.
Test Condition	100pF 1.5kΩ	Sample Quantity	Each 10pcs

Test Result	Min.	Typ.	Max.
Forword	Over 4000V	Over 4000V	Over 4000V
Reverse	Over 4000V	Over 4000V	Over 4000V

2.Charged Device Model

Based Standard	JEDEC JESD22-C101E	Criteria	VR=5V, IR≦ Spec Max.
Test Condition	Applied Voltage(V)	+500V,-500V	
	Discharged terminal	Anode	Cathode
Test Result	Pn/n	0/10	

※This data is actual value from specific lot and is not guaranteed.

©2025 ROHM Co., Ltd. All rights reserved

chanhvinh.com

Notes

1) The information contained herein is subject to change without notice.

2) Before you use our Products, please contact our sales representative and verify the latest specifications.

3) Although ROHM is continuously working to improve product reliability and quality, semiconductors can break down and malfunction due to various factors.
Therefore, in order to prevent personal injury or fire arising from failure, please take safety measures such as complying with the derating characteristics, implementing redundant and fire prevention designs, and utilizing backups and fail-safe procedures. ROHM shall have no responsibility for any damages arising out of the use of our Poducts beyond the rating specified by ROHM.

4) Examples of application circuits, circuit constants and any other information contained herein are provided only to illustrate the standard usage and operations of the Products. The peripheral conditions must be taken into account when designing circuits for mass production.

5) The technical information specified herein is intended only to show the typical functions of and examples of application circuits for the Products. ROHM does not grant you, explicitly or implicitly, any license to use or exercise intellectual property or other rights held by ROHM or any other parties. ROHM shall have no responsibility whatsoever for any dispute arising out of the use of such technical information.

6) The Products are intended for use in general electronic equipment (i.e. AV/OA devices, communication, consumer systems, gaming/entertainment sets) as well as the applications indicated in this document.

7) The Products specified in this document are not designed to be radiation tolerant.

8) For use of our Products in applications requiring a high degree of reliability (as exemplified below), please contact and consult with a ROHM representative : transportation equipment (i.e. cars, ships, trains), primary communication equipment, traffic lights, fire/crime prevention, safety equipment, medical systems, servers, solar cells, and power transmission systems.

9) Do not use our Products in applications requiring extremely high reliability, such as aerospace equipment, nuclear power control systems, and submarine repeaters.

10) ROHM shall have no responsibility for any damages or injury arising from non-compliance with the recommended usage conditions and specifications contained herein.

11) ROHM has used reasonable care to ensure the accuracy of the information contained in this document. However, ROHM does not warrants that such information is error-free, and ROHM shall have no responsibility for any damages arising from any inaccuracy or misprint of such information.

12) Please use the Products in accordance with any applicable environmental laws and regulations, such as the RoHS Directive. For more details, including RoHS compatibility, please contact a ROHM sales office. ROHM shall have no responsibility for any damages or losses resulting non-compliance with any applicable laws or regulations.

13) When providing our Products and technologies contained in this document to other countries, you must abide by the procedures and provisions stipulated in all applicable export laws and regulations, including without limitation the US Export Administration Regulations and the Foreign Exchange and Foreign Trade Act.

14) This document, in part or in whole, may not be reprinted or reproduced without prior consent of ROHM.

ROHM SEMICONDUCTOR

Thank you for your accessing to ROHM product informations.
More detail product informations and catalogs are available, please contact us.

ROHM Customer Support System

http://www.rohm.com/contact/

© 2015 ROHM Co., Ltd. All rights reserved.

chanhvinh.com

General Precaution

1. Before you use our Products, you are requested to carefully read this document and fully understand its contents. ROHM shall not be in any way responsible or liable for failure, malfunction or accident arising from the use of any ROHM's Products against warning, caution or note contained in this document.

2. All information contained in this document is current as of the issuing date and subject to change without any prior notice. Before purchasing or using ROHM's Products, please confirm the latest information with a ROHM sales representative.

3. The information contained in this document is provided on an "as is" basis and ROHM does not warrant that all information contained in this document is accurate and/or error-free. ROHM shall not be in any way responsible or liable for any damages, expenses or losses incurred by you or third parties resulting from inaccuracy or errors of or concerning such information.

© 2015 ROHM Co., Ltd. All rights reserved.