chanhvinh.com

Datasheet

Automotive IPD Series

Built-in Output Diagnosis 1ch High Side Switch

BV1HLC45EFJ-C

General Description

BV1HLC45EFJ-C is a 1ch high side switch for automotive application. It has a built-in overcurrent limit function, thermal shutdown protection function, open load detection function, low power output-OFF function and short-to-VCC detection function. It is equipped with diagnostic output function for abnormality detection.

Features

- Built-in Dual TSD*(Note 1)*
- AEC-Q100 Qualified*(Note2)*
- Built-in Overcurrent Protection Function (OCP)
- Built-in Thermal Shutdown Protection Function (TSD)
- Built-in Open Load Detection Function
- Built-in Short-to-VBB Detection Function
- Built-in Low Voltage Output OFF Function (UVLO)
- Built-in Reverse Battery Connection Protection
- Built-in Diagnostic Output
- Low On-Resistance Single Nch MOSFET Switch
- Monolithic power management IC with control unit (CMOS) and power MOSFET mounted on a single chip

(Note 1) Two type of built-in temperature protection:
Junction temperature, and ΔTj protection that detects sudden temperature rise of the Power-MOS
(Note 2) Grade 1

Application

- Resistance load, inductance load and capacitance load for automotive application

Key Specifications

- Power Supply Operating Range: 6 V to 28 V
- ON-Resistance (Tj = 25 °C): 45 mΩ (Typ)
- Overcurrent Limit: 2.5 A (Min)
- Standby Current (Tj = 25 °C): 0.5 µA (Max)
- Active Clamp Tolerance (Tj = 25 °C): 120 mJ

Package	W (Typ) x D (Typ) x H (Max)
HTSOP-J8	4.9 mm x 6.0 mm x 1.0 mm



Typical Application Circuit

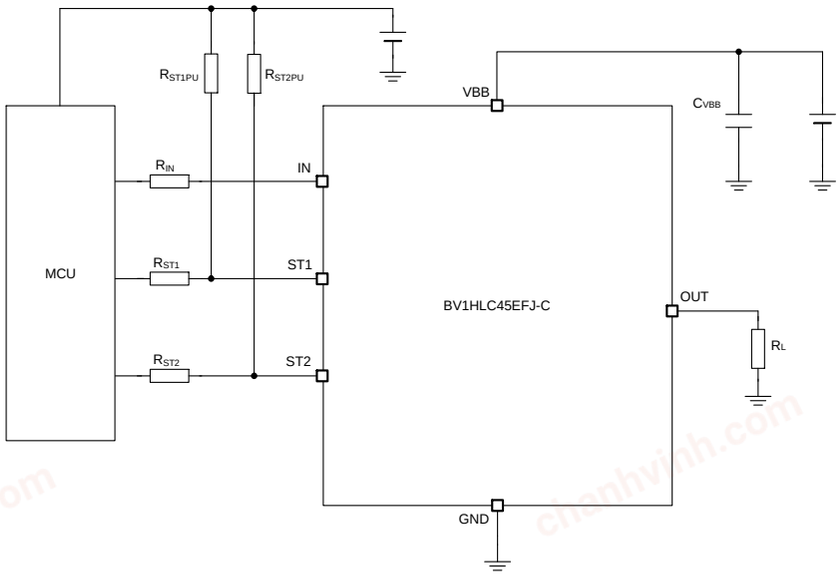

○Product structure : Silicon integrated circuit ○This product has no designed protection against radioactive rays

© 2021 ROHM Co., Ltd. All rights reserved.

chanhvinh.com

Contents

General Description 1
Features 1
Application 1
Key Specifications 1
Package 1
Typical Application Circuit 1
Contents 2
Pin Configuration 3
Pin Description 3
Block Diagram 3
Definition 4
Absolute Maximum Ratings 5
Recommended Operating Conditions 5
Thermal Resistance 6
Electrical Characteristics 10
Typical Performance Curves 11
Measurement Circuit 16
Switching Time Measurement Condition 18
Timing Chart 19
Function Description 20
Application Circuit Diagram 25
I/O Equivalence Circuits 26
Operational Notes 27
Ordering Information 29
Marking Diagram 29
Physical Dimension and Packing Information 30
Revision History 31

© 2021 ROHM Co., Ltd. All rights reserved.

chanhvinh.com

Pin Configuration

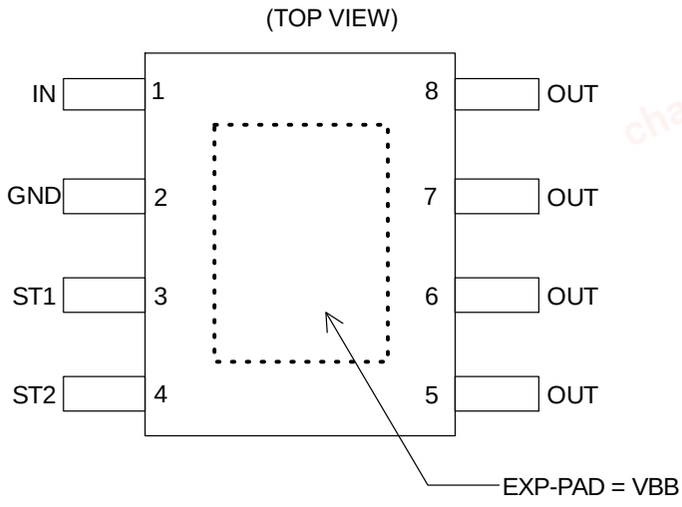

Pin Description

Pin No.	Pin Name	Function
1	IN	Input pin. Pull-down resistor is connected internally. Active High to turn on the switch.
2	GND	Ground pin
3	ST1	Self–diagnostic output pin 1
4	ST2	Self-diagnostic output pin 2
5	OUT	Switch output pin
6	OUT	Switch output pin
7	OUT	Switch output pin
8	OUT	Switch output pin
EXP-PAD	VBB	Power input pin, switch input pin

Block Diagram

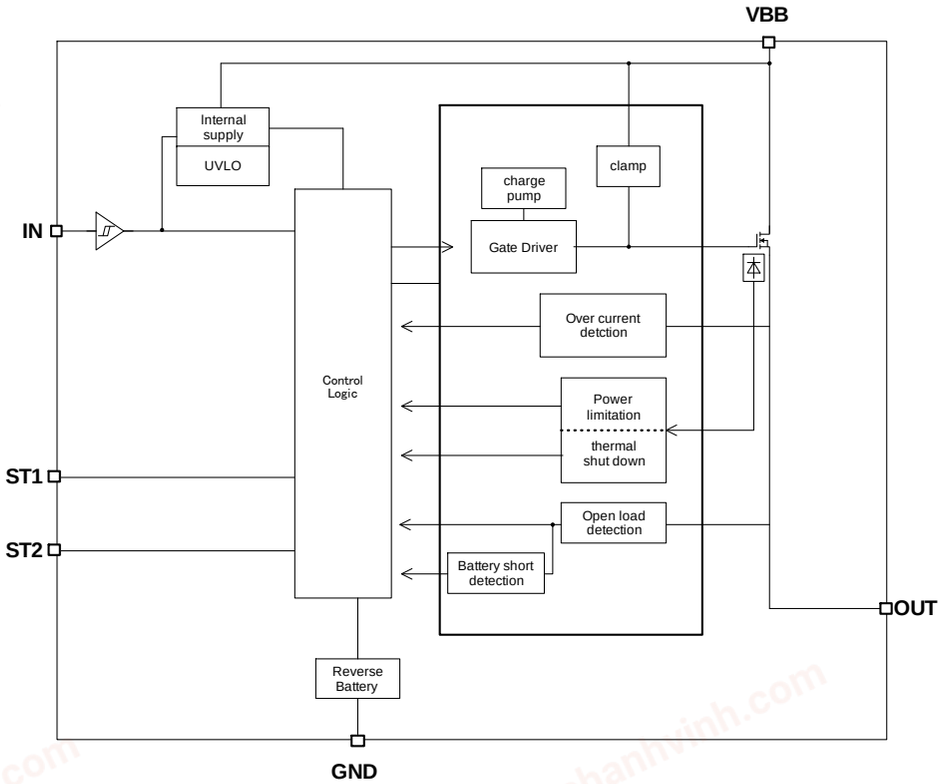

© 2021 ROHM Co., Ltd. All rights reserved.

chanhvinh.com

Definition

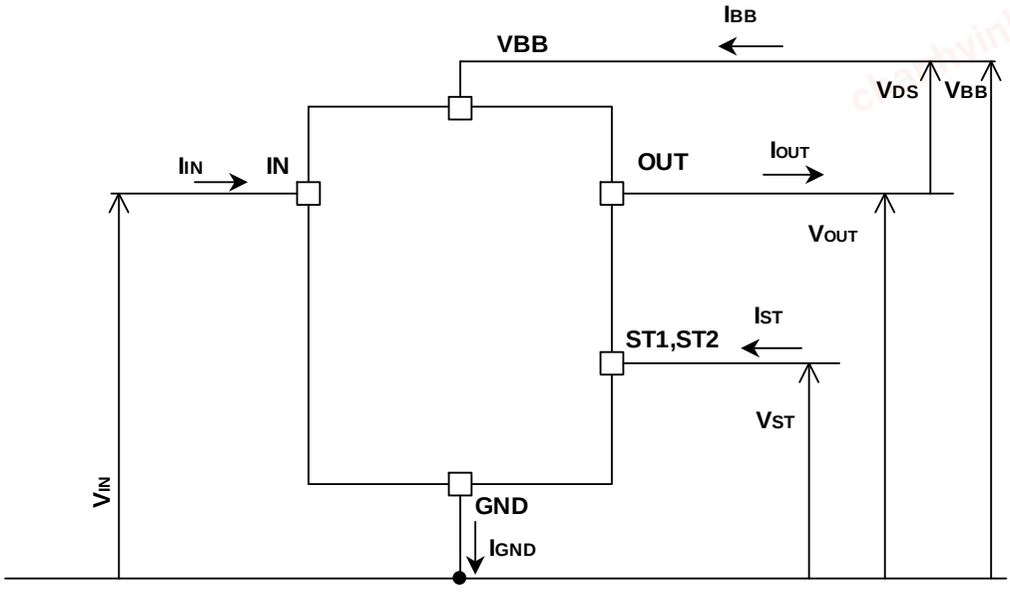

Figure 1. Voltage and Current Definition

© 2021 ROHM Co., Ltd. All rights reserved.

chanhvinh.com

Absolute Maximum Ratings (Ta = 25 °C)

Parameter	Symbol	Rating	Unit
VBB - OUT Voltage	V_{DS}	-0.3 to Internal clamp *(Note 1)*	V
Power Supply Voltage	V_{BB}	-0.3 to +40	V
Input Voltage	V_{IN}	-0.3 to +7.0	V
Diagnostic Output Voltage	V_{ST}	- 0.3 to +7.0	V
Output Current	I_{OUT}	Internal limit *(Note 2)*	A
Diagnostic Output Current	I_{ST}	10	mA
Junction Temperature Width	Tj	-40 to +150	°C
Storage Temperature Range	Tstg	-55 to +150	°C
Maximum Junction Temperature	Tjmax	+150	°C
Active Clamp Energy (Single Pulse) $Tj_{(START)}$ = 25 °C, I_{OUT} = 2 A *(Note 3) (Note 4)*	$E_{AS\ (25\ °C)}$	120	mJ
Active Clamp Energy (Single Pulse) $Tj_{(START)}$ = 150 °C, I_{OUT} = 2 A *(Note 3) (Note 4)*	$E_{AS\ (150\ °C)}$	60	mJ
Supply Voltage for Short Circuit Protection *(Note 5)*	V_{BBLIM}	28	V
Supply Voltage for Reverse-Battery Connection Protection	V_{RBPLIM}	18	V

(Note 1) Internally limited by output clamp voltage.
(Note 2) Internally limited by fixed over current limit.
(Note 3) Maximum active clamp energy using single pulse of $I_{OUT(START)}$ = 2 A and V_{BB} = 14 V.
(Note 4) Not 100% tested.
(Note 5) Maximum power supply voltage that can detect short circuit protection.

Caution 1: *Operating the IC over the absolute maximum ratings may damage the IC. The damage can either be a short circuit between pins or an open circuit between pins and the internal circuitry. Therefore, it is important to consider circuit protection measures, such as adding a fuse, in case the IC is operated over the absolute maximum ratings.*

Caution 2: *Should by any chance the maximum junction temperature rating be exceeded the rise in temperature of the chip may result in deterioration of the properties of the chip. In case of exceeding this absolute maximum rating, design a PCB with thermal resistance taken into consideration by increasing board size and copper area so as not to exceed the maximum junction temperature rating.*

Caution 3: *When IC turns off with an inductive load, reverse energy is generated. This energy can be calculated by the following equation:*

$$E_L = \frac{1}{2} \times L \times I_{OUT(START)}{}^2 \times \left(1 - \frac{V_{BB}}{V_{BB} - V_{DS}}\right)$$

Where:
L is the inductance of the inductive load.
$I_{OUT(START)}$ is the output current at the time of turning off.

The BV1HLC45EFJ-C integrates the active clamp function to internally absorb the reverse energy E_L which is generated when the inductive load is turned off. When the active clamp operates, the thermal shutdown function does not work. Decide a load so that the reverse energy E_L is active clamp tolerance E_{AS} (refer to Figure 24. Active Clamp Energy vs Output Current) or under when inductive load is used.

Recommended Operating Conditions

Parameter	Symbol	Min	Typ	Max	Unit
Power Supply Voltage Operating Range	V_{BB}	6	14	28	V
Operating Temperature	Topr	-40	-	+150	°C
Input Frequency	f_{IN}	-	-	1	kHz

© 2021 ROHM Co., Ltd. All rights reserved.

chanhvinh.com

Thermal Resistance *(Note 1)*

Parameter	Symbol	Typ	Unit	Condition	
HTSOP-J8					
Between Junction and Surroundings Temperature Thermal Resistance	θ_{JA}	130.3	°C/W	1s	*(Note 2)*
		36.8	°C/W	2s	*(Note 3)*
		25.9	°C/W	2s2p	*(Note 4)*
Between Junction and the top center of the outside surface of the component package Thermal Characterization Parameter *(Note 5)*	Ψ_{JT}	20	°C/W	1s	*(Note 2)*
		8	°C/W	2s	*(Note 3)*
		6	°C/W	2s2p	*(Note 4)*

(Note 1) The thermal impedance is based on JESD51-2A (Still-Air) standard. It is used the chip of BV1HLC45EFJ-C.
(Note 2) JESD51-3 standard FR4 114.3 mm x 76.2 mm x 1.57 mm 1-layer (1s)
(Top copper foil: ROHM recommended Footprint + wiring to measure, 2 oz. copper.)
(Note 3) JESD51-5 standard FR4 114.3 mm x 76.2 mm x 1.60 mm 2-layers (2s)
(Top copper foil: ROHM recommended Footprint + wiring to measure/
Copper foil area on the reverse side of PCB: 74.2 mm x 74.2 mm,
copper (top & reverse side) 2 oz)
(Note 4) JESD51-5/-7 standard FR4 114.3 mm x 76.2 mm x 1.60 mm 4-layers (2s2p)
(Top copper foil: ROHM recommended Footprint + wiring to measure/
2 inner layers and copper foil area on the reverse side of PCB: 74.2 mm x 74.2 mm,
copper (top & reverse side/inner layers) 2 oz/1 oz)
(Note 5) The thermal characterization parameter to report the difference between junction temperature and the temperature at the top center of the outside surface of the component package.

■ PCB Layout 1 layer (1s)

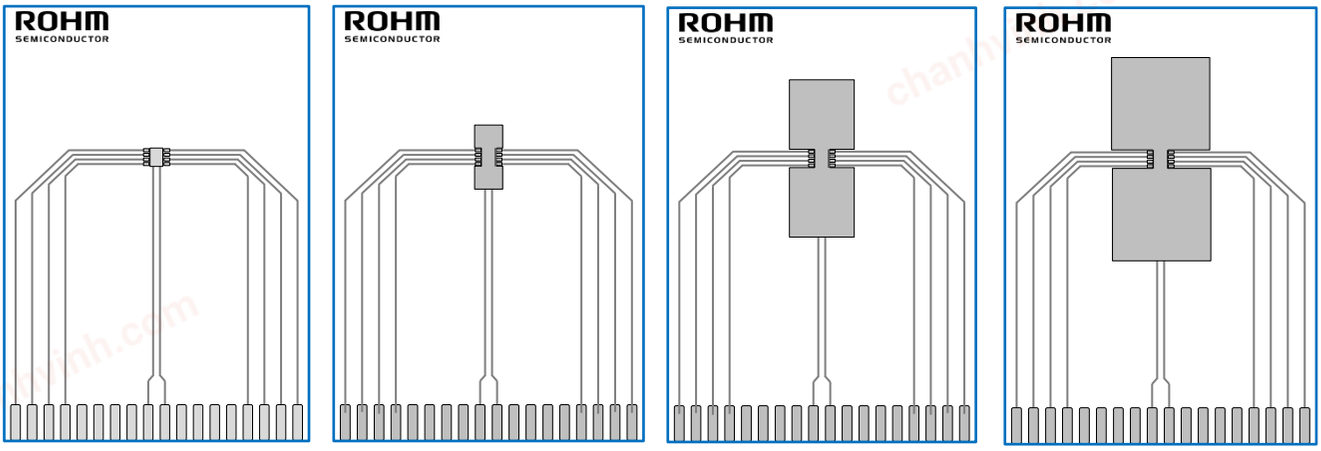

Footprint 100 mm^2 600 mm^2 1200 mm^2

Figure 2. PCB Layout 1 Layer (1s)

Dimension	Value
Board Finish Thickness	1.57 mm ± 10 %
Board Dimension	76.2 mm x 114.3 mm
Board Material	FR4
Copper Thickness (Top Layer)	0.070 mm (Cu: 2 oz)
Copper Foil Area Dimension	Footprint/100 mm^2/600 mm^2/1200 mm^2

© 2021 ROHM Co., Ltd. All rights reserved.

chanhvinh.com

Thermal Resistance – continued

- PCB Layout 2 layers (2s)

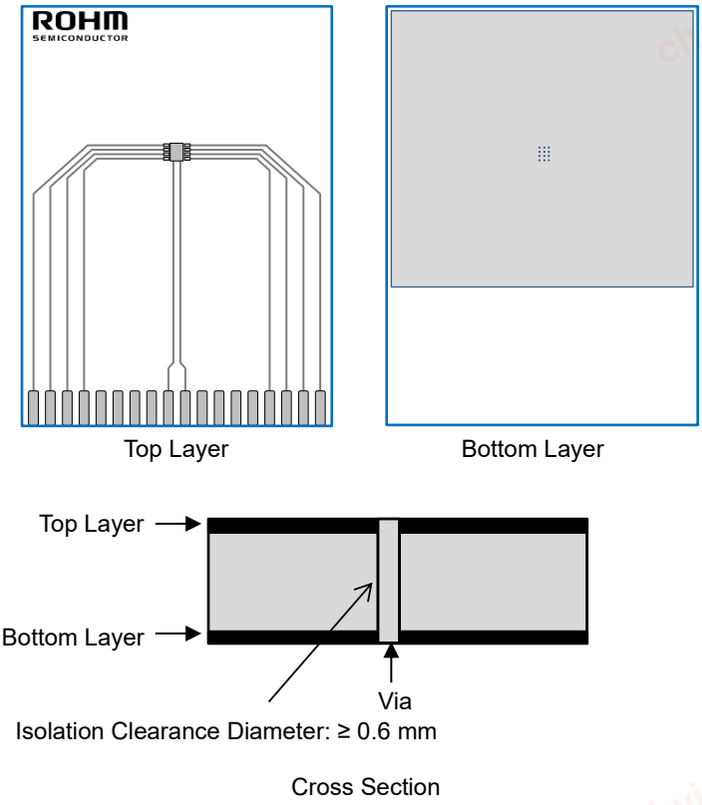

Figure 3. PCB Layout 2 Layers (2s)

Dimension	Value
Board Finish Thickness	1.60 mm ± 10 %
Board Dimension	76.2 mm x 114.3 mm
Board Material	FR4
Copper Thickness (Top/Bottom Layers)	0.070 mm (Cu + Plating)
Thermal Vias Separation/Diameter	1.2 mm/0.3 mm

© 2021 ROHM Co., Ltd. All rights reserved.

chanhvinh.com

Thermal Resistance – continued

- PCB Layout 4 layers (2s2p)

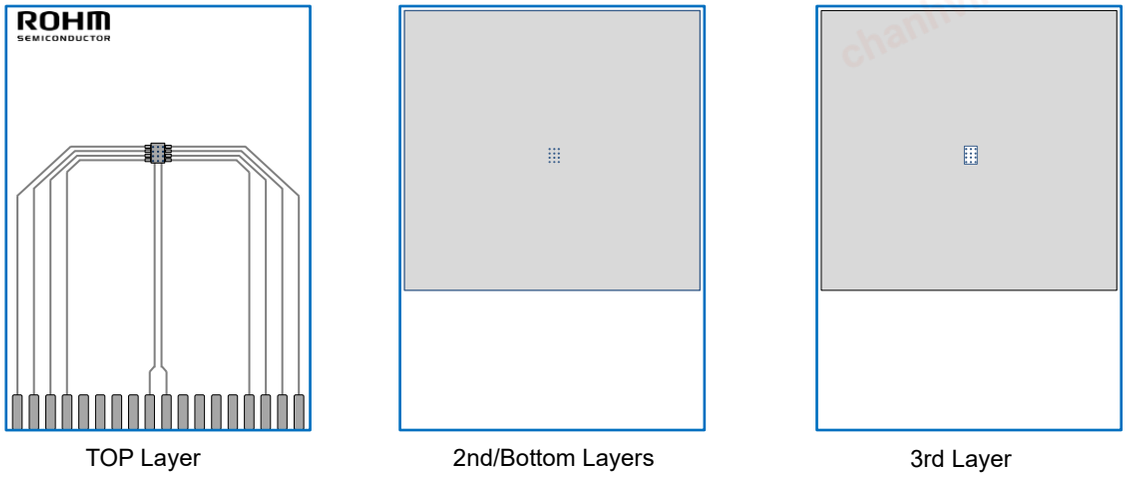

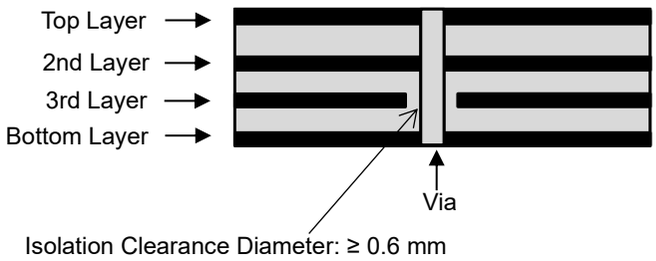

Figure 4. PCB Layout 4 Layers (2s2p)

Dimension	Value
Board Finish Thickness	1.60 mm ± 10 %
Board Dimension	76.2 mm x 114.3 mm
Board Material	FR4
Copper Thickness (Top/Bottom Layers)	0.070 mm (Cu + Plating)
Copper Thickness (Inner Layers)	0.035 mm
Thermal Vias Separation/Diameter	1.2 mm/0.3 mm

© 2021 ROHM Co., Ltd. All rights reserved.

chanhvinh.com

Thermal Resistance – continued

- Transient Thermal Resistance (Single Pulse)

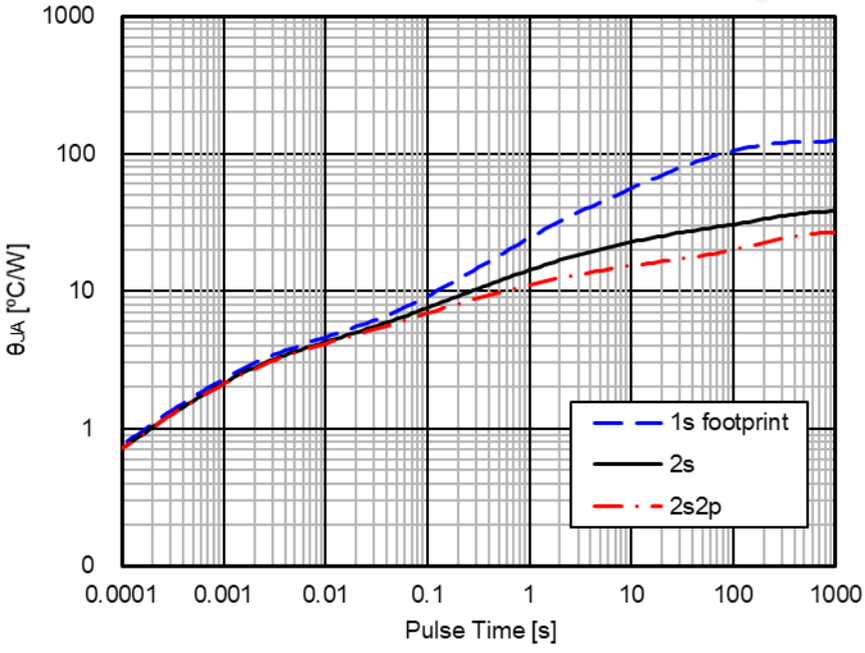

Figure 5. Transient Thermal Resistance

- Thermal Resistance (θ_{JA} vs Copper foil area- 1s)

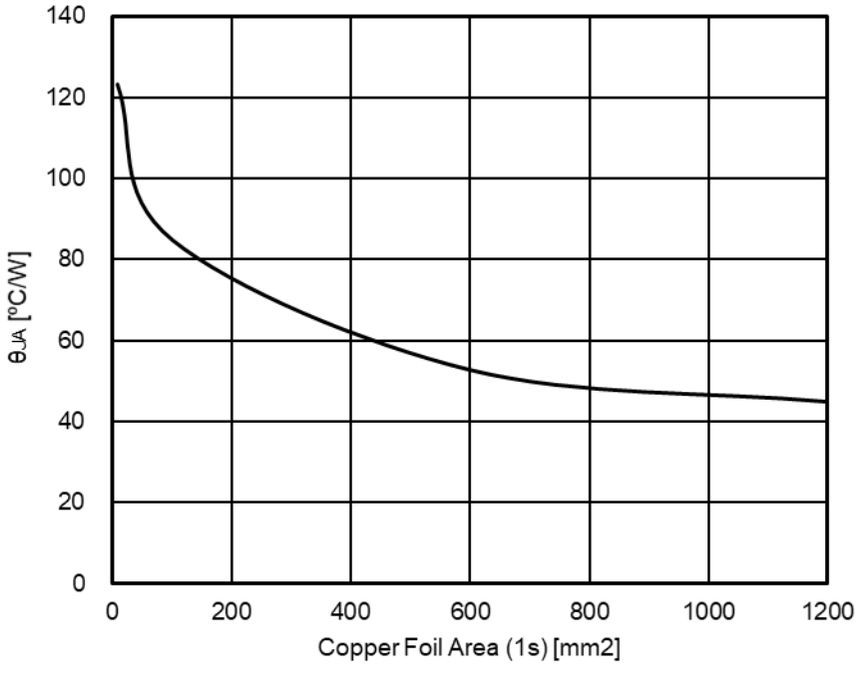

Figure 6. Thermal Resistance

© 2021 ROHM Co., Ltd. All rights reserved.

chanhvinh.com

Electrical Characteristics (unless otherwise specified V_{BB} = 6 V to 28 V, T_j = -40 °C to 150 °C)

Parameter	Symbol	Limit			Unit	Condition
		Min	Typ	Max		
Power Supply						
Standby current	I_{BBL1}	-	-	0.5	µA	V_{BB} = 14 V, V_{IN} = 0 V, V_{OUT} = 0 V, Tj = 25 °C
	I_{BBL2}	-	-	20	µA	V_{BB} = 14 V, V_{IN} = 0 V, V_{OUT} = 0 V, Tj = 150 °C
Operating Current	I_{BBH}	-	2.0	3.5	mA	V_{BB} = 14 V, V_{IN} = 5 V, V_{OUT} = open
UVLO Detection Voltage	V_{UVLO}	-	-	5.0	V	
UVLO Hysteresis Voltage	V_{UVHYS}	-	-	1.0	V	
Input						
High Level Input Voltage	V_{INH}	2.1	-	-	V	
Low Level Input Voltage	V_{INL}	-	-	0.9	V	
Input Hysteresis Voltage	V_{HYS}	-	0.3	-	V	
High Level Input Current	I_{INH}	-	50	150	µA	V_{IN} = 5 V
Low Level Input Current	I_{INL}	-10	-	+10	µA	V_{IN} = 0 V
Power MOS Output						
Output ON Resistance	R_{ON1}	-	45	60	mΩ	V_{BB} = 8 V to 28 V, Tj = 25 °C
	R_{ON2}	-	-	90	mΩ	V_{BB} = 8 V to 28 V, Tj = 150 °C
	R_{ON3}	-	-	75	mΩ	V_{BB} = 6 V, Tj = 25 °C
Output Leak Current	I_{OUTL1}	-	-	0.5	µA	V_{IN} = 0 V, V_{OUT} = 0 V, Tj = 25 °C
	I_{OUTL2}	-	-	10	µA	V_{IN} = 0 V, V_{OUT} = 0 V, Tj = 150 °C
Output Slew Rate when ON	SR_{ON}	-	0.3	1.0	V/µs	V_{BB} = 14 V, R_L = 6.5 Ω
Output Slew Rate when OFF	SR_{OFF}	-	0.3	1.0	V/µs	V_{BB} = 14 V, R_L = 6.5 Ω
Propagation Delay when ON	t_{OUTON}	-	60	120	µs	V_{BB} = 14 V, R_L = 6.5 Ω
Propagation Delay when OFF	t_{OUTOFF}	-	60	120	µs	V_{BB} = 14 V, R_L = 6.5 Ω
Output Clamp Voltage	V_{DS}	45	50	55	V	V_{IN} = 0 V, I_{OUT} = 10 mA
Diagnostics						
Diagnostic Output L Voltage	V_{STL}	-	-	0.5	V	I_{ST} = 1 mA
Diagnostic Output Leak Current	I_{STL}	-	-	10	µA	V_{ST} = 5 V
Propagation Delay Time when Diagnostic Output is ON	t_{STON}	-	120	240	µs	V_{BB} = 14 V, R_L = 6.5 Ω
Propagation Delay Time when Diagnostic Output is OFF	t_{STOFF}	-	50	100	µs	V_{BB} = 14 V, R_L = 6.5 Ω
Protection Circuit						
Overcurrent Limit Value	I_{LIM}	2.5	4.0	5.5	A	V_{DS} = 5 V
Overcurrent Detect Value 1 *(Note 1)*	I_{OCD1}	2.5	-	10.0	A	Tj = -40 °C
Overcurrent Detect Value 2 *(Note 1)*	I_{OCD2}	2.5	-	5.8	A	Tj = 150 °C
Short-to-VCC Detection Voltage	V_{SHV}	V_{BB}-1.8	V_{BB}-1.2	V_{BB}-0.5	V	V_{IN} = 0 V
Load Open Detection Voltage	V_{OLD}	2.0	3.0	4.0	V	V_{IN} = 0 V
Load Open Detection Sink Current	I_{OLD}	-	10	30	µA	V_{IN} = 0 V, V_{OUT} = 5 V
Thermal Shutdown *(Note 2)*	T_{TSD}	150	175	200	°C	
Thermal Shutdown Hysteresis *(Note 2)*	T_{TSDHYS}	-	15	-	°C	
ΔTj Protection Temperature *(Note 2)*	T_{DTJ}	-	120	-	°C	

(Note 1) Max value is not 100% tested.
(Note 2) Not 100% tested.

© 2021 ROHM Co., Ltd. All rights reserved.

chanhvinh.com

Typical Performance Curves

(Unless otherwise specified V_{BB} = 14 V, IN = 5 V, Tj = 25 °C)

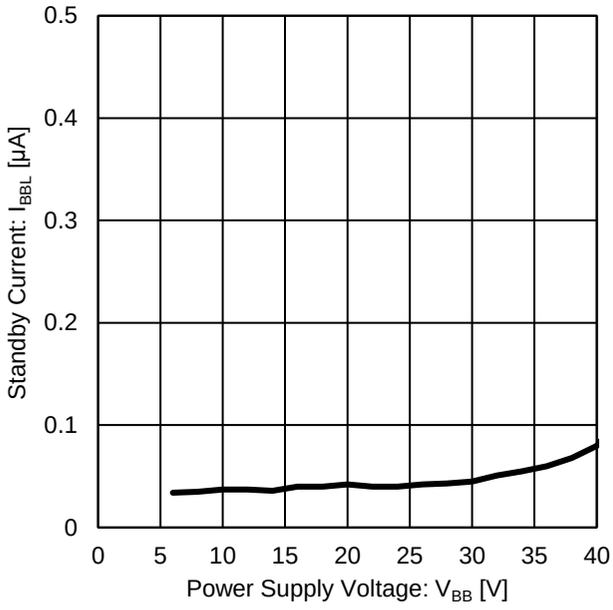

Figure 7. Standby Current vs Power Supply Voltage

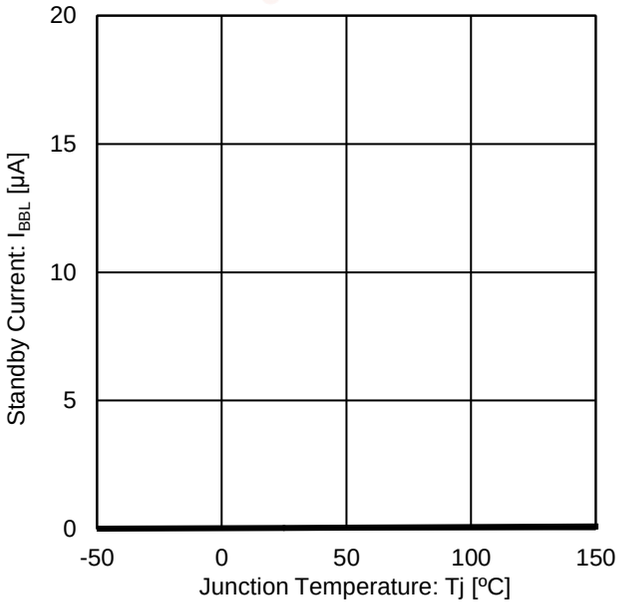

Figure 8. Standby Current vs Junction Temperature

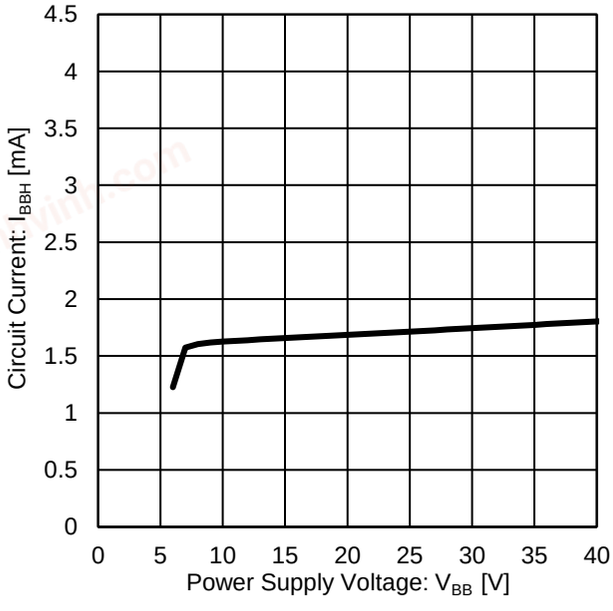

Figure 9. Circuit Current vs Power Supply Voltage

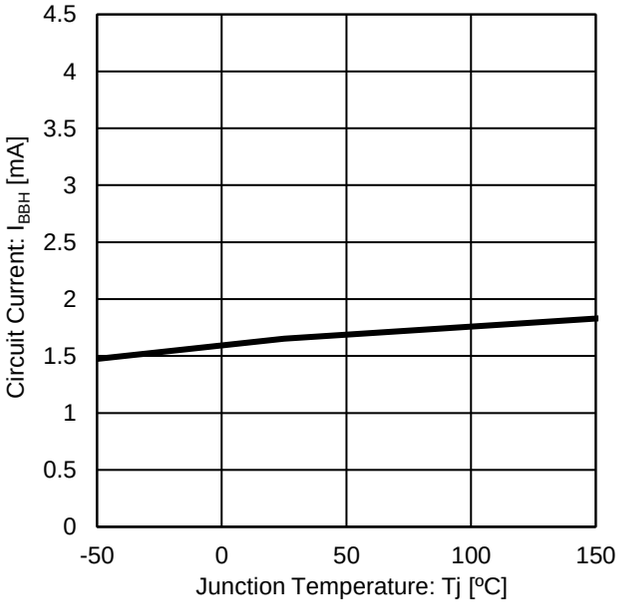

Figure 10. Circuit Current vs Junction Temperature

© 2021 ROHM Co., Ltd. All rights reserved.

chanhvinh.com

Typical Performance Curves - continued

(Unless otherwise specified V_{BB} = 14 V, IN = 5 V, Tj = 25 °C)

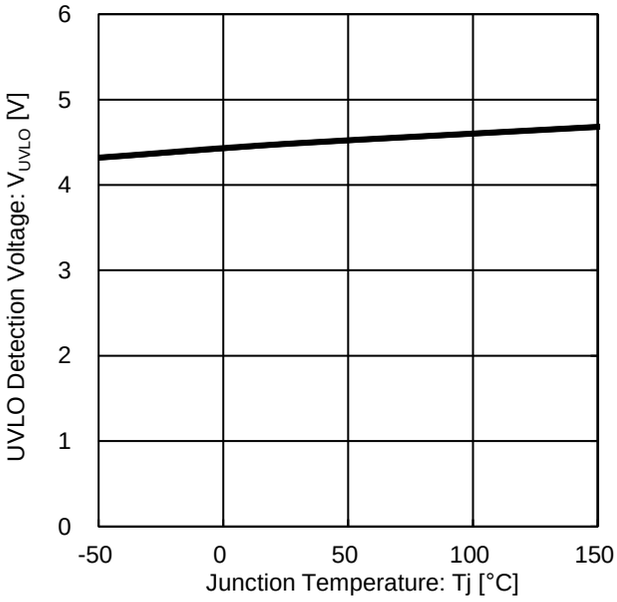

Figure 11. UVLO Detection Voltage vs Junction Temperature

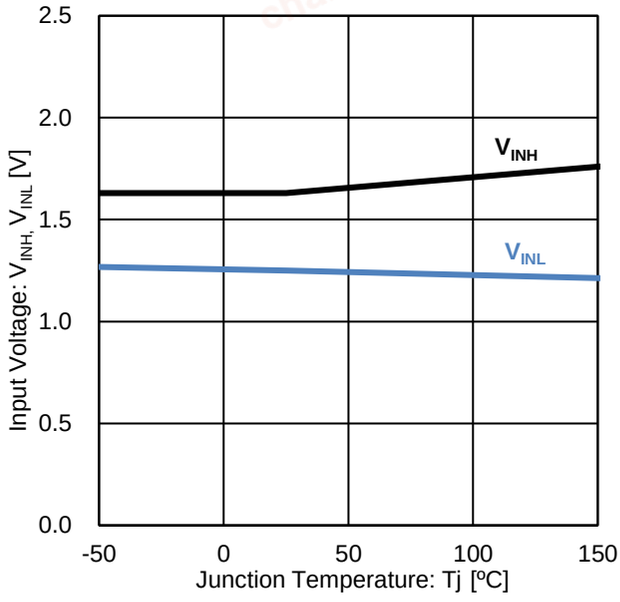

Figure 12. Input Voltage vs Junction Temperature

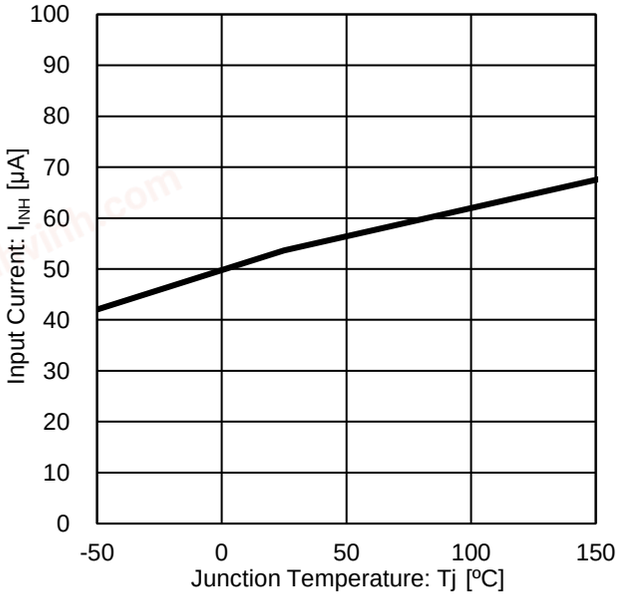

Figure 13. Input Current vs Junction Temperature

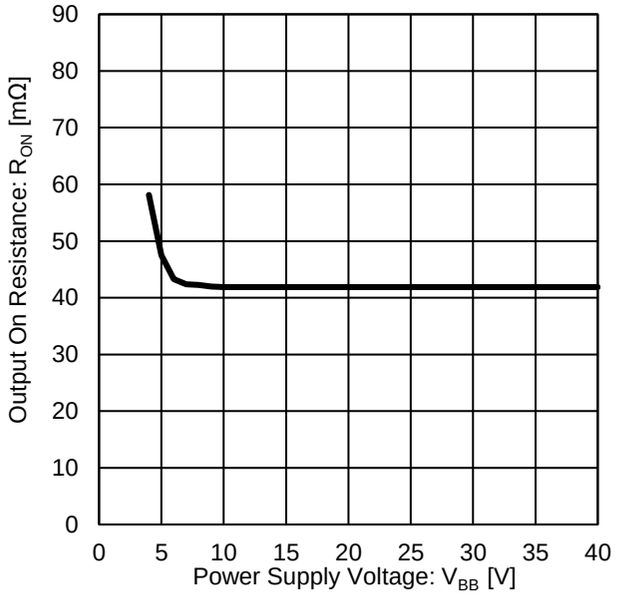

Figure 14. Output ON Resistance vs Supply Voltage

© 2021 ROHM Co., Ltd. All rights reserved.

chanhvinh.com

Typical Performance Curves - continued

(Unless otherwise specified V_{BB} = 14 V, IN = 5 V, Tj = 25 °C)

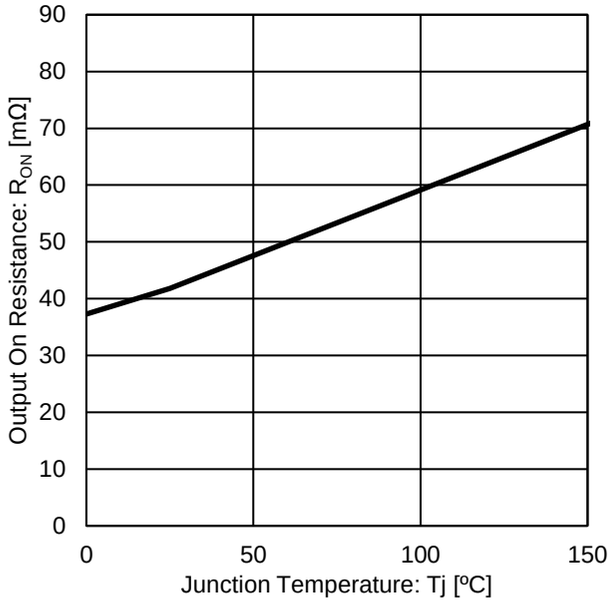

Figure 15. Output ON Resistance vs Junction Temperature

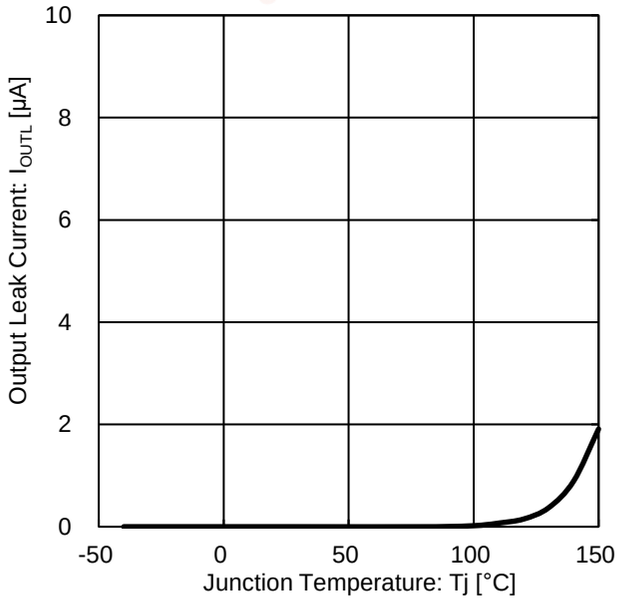

Figure 16. Output leak Current vs Junction Temperature

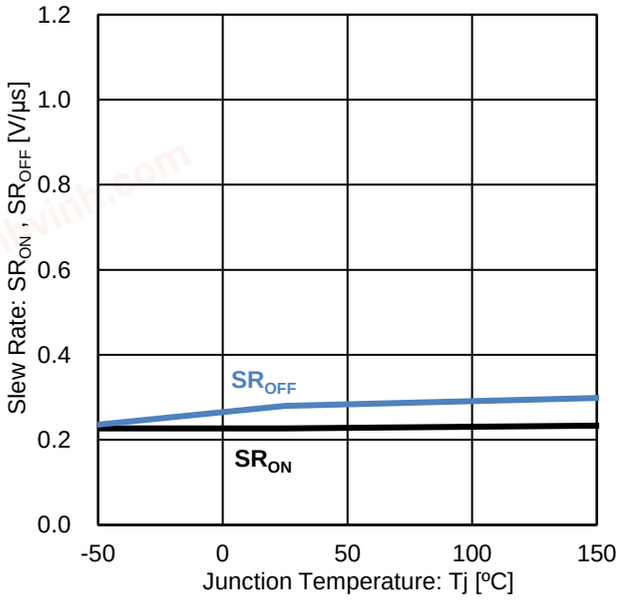

Figure 17. Output Slew Rate vs Junction Temperature

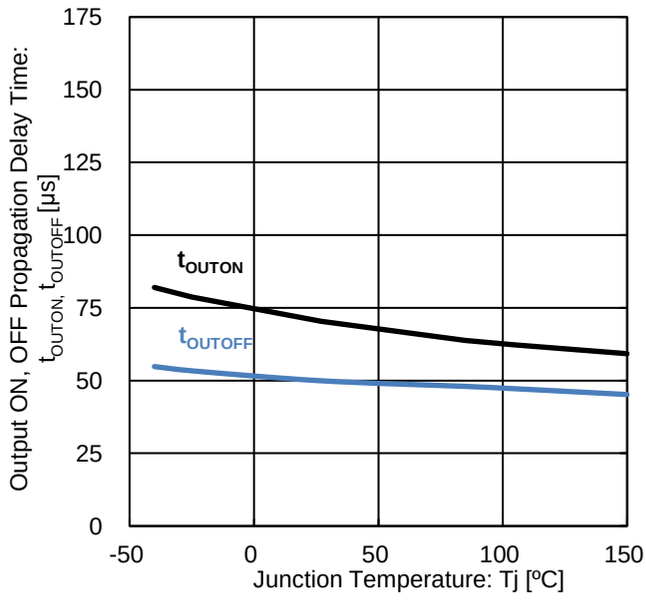

Figure 18. Output ON, OFF Propagation Delay Time vs Junction Temperature

© 2021 ROHM Co., Ltd. All rights reserved.

chanhvinh.com

Typical Performance Curves - continued

(Unless otherwise specified V_{BB} = 14 V, IN = 5 V, Tj = 25 °C)

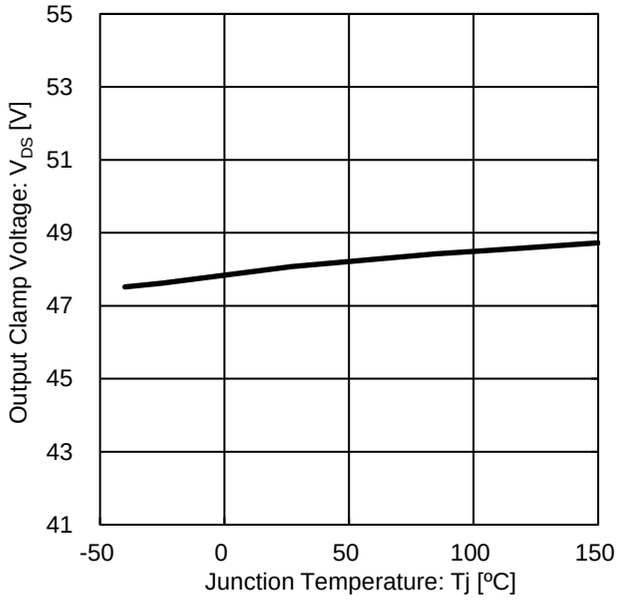

Figure 19. Output Clamp Voltage vs Junction Temperature

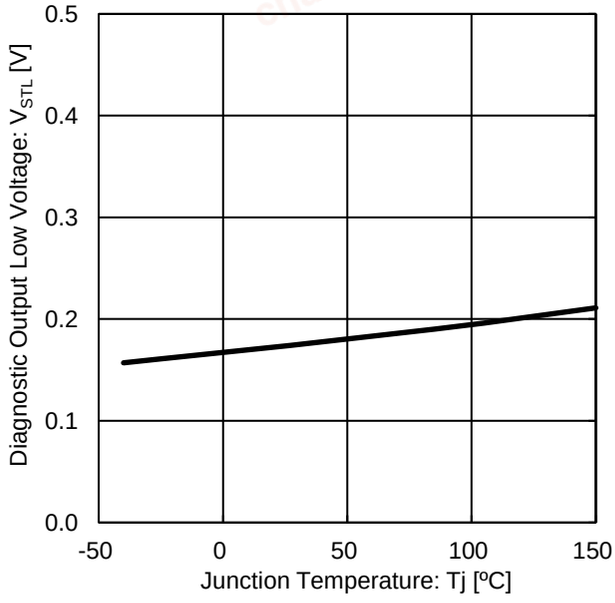

Figure 20. Diagnostic Output Low Voltage vs Junction Temperature

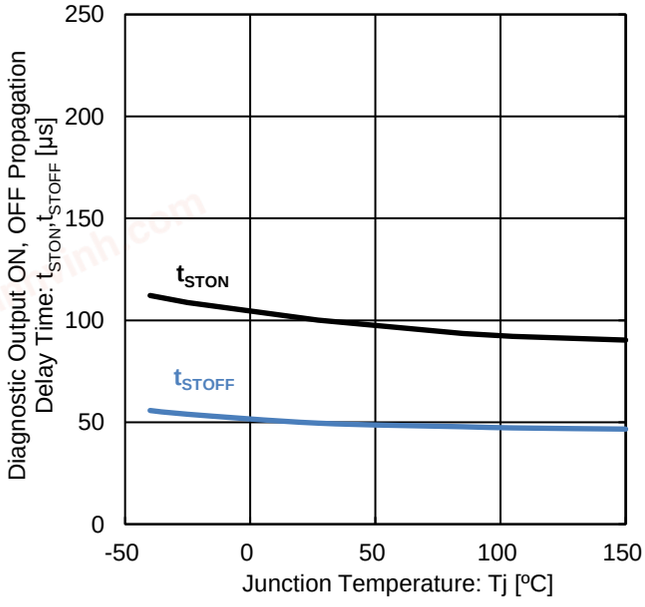

Figure 21. Diagnostic Output ON, OFF Propagation Delay Time vs Junction Temperature

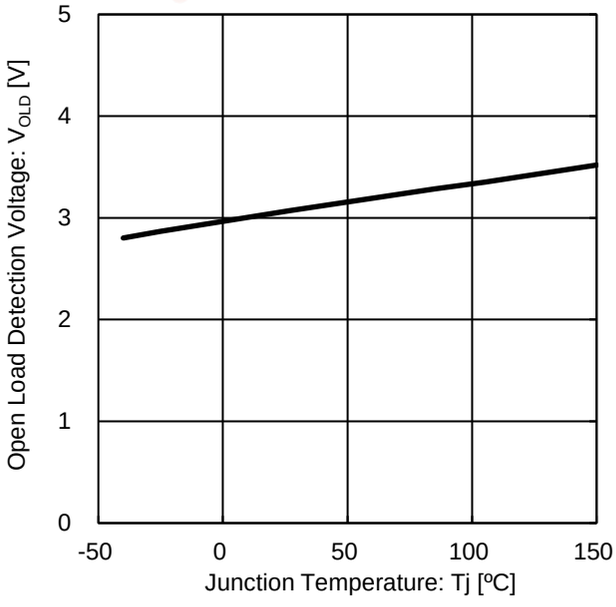

Figure 22. Open Load Detection Voltage vs Junction Temperature

© 2021 ROHM Co., Ltd. All rights reserved.

chanhvinh.com

Typical Performance Curves - continued

(Unless otherwise specified V_{BB} = 14 V, IN = 5 V, Tj = 25 °C)

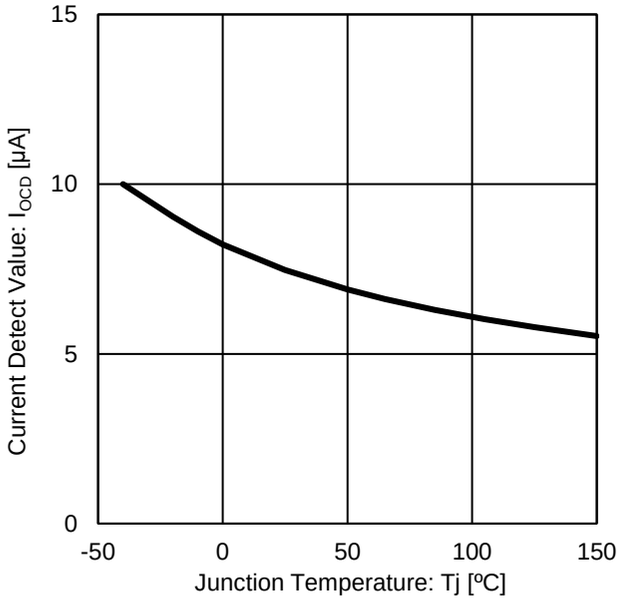

Figure 23. Current Detect Value vs Junction Temperature

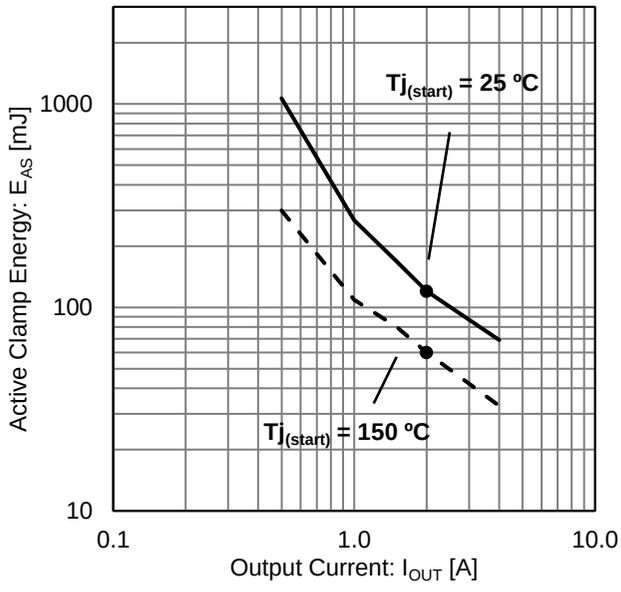

Figure 24. Active Clamp Energy vs Output Current

© 2021 ROHM Co., Ltd. All rights reserved.

chanhvinh.com

Measurement Circuit

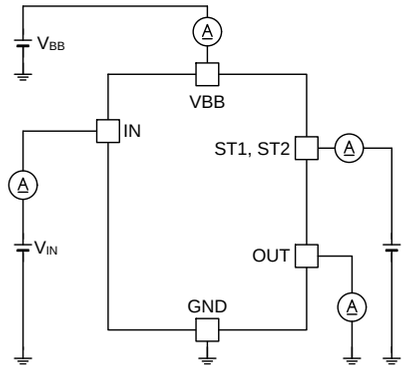

Figure 25. Standby Current
Low-Level Input Current
Output Leak Current
Diagnostic Output Leak Current

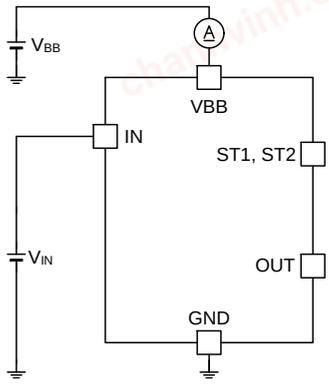

Figure 26. Operating Current

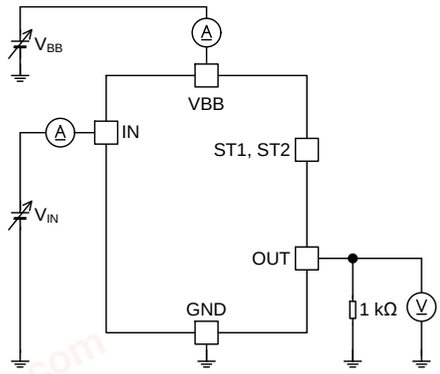

Figure 27. UVLO Detection Voltage
UVLO Hysteresis Voltage
High Level Input Voltage
Low Level Input Voltage
Input Hysteresis Voltage
High Level Input Current
Thermal Shutdown
Thermal Shutdown Hysteresis

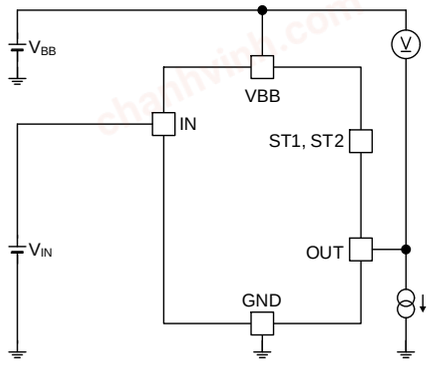

Figure 28. Output ON Resistance
Output Clamp Voltage

© 2021 ROHM Co., Ltd. All rights reserved.

chanhvinh.com

Measurement Circuit - continued

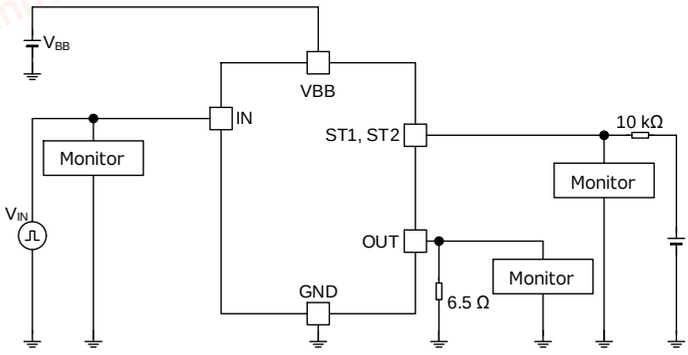

Figure 29. Output ON Slew Rate
Output OFF Slew Rate
Output ON Propagation Delay Time
Output OFF Propagation Delay Time
Diagnostic Output ON Propagation Delay Time
Diagnostic Output OFF Propagation Delay Time

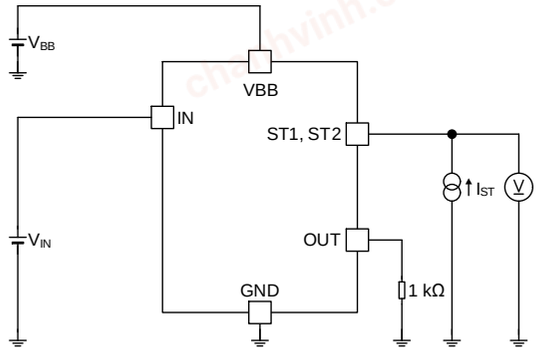

Figure 30. Diagnostic Output Low Voltage

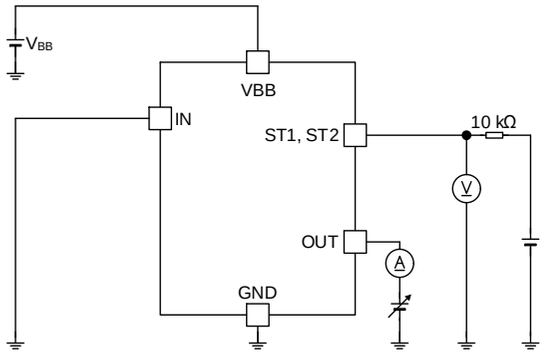

Figure 31. Open Load Detection Voltage
Open Load Detection Sink Current

© 2021 ROHM Co., Ltd. All rights reserved.

chanhvinh.com

Switching Time Measurement Condition

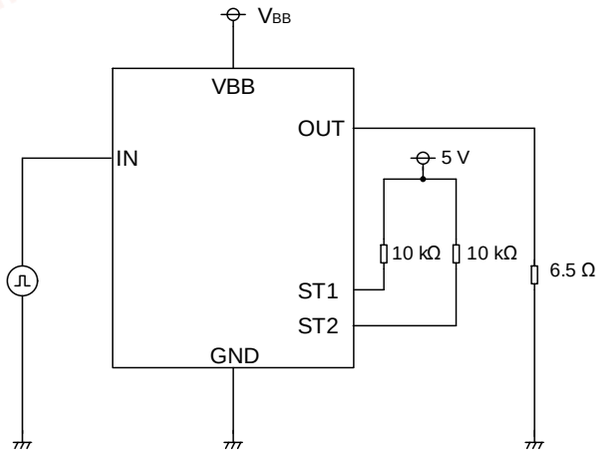

Figure 32. Switching Time Measurement Diagram

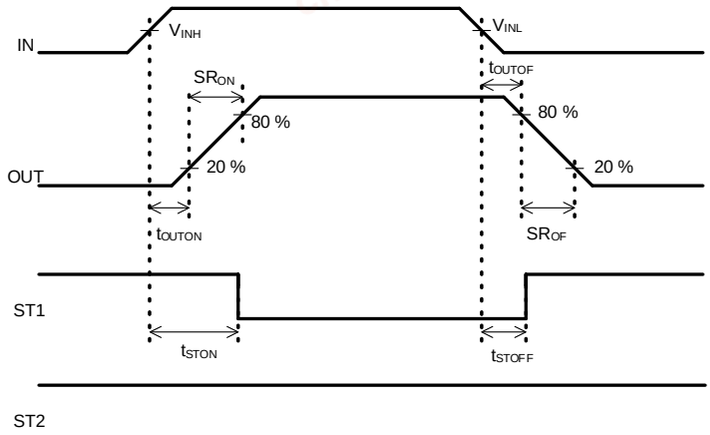

Figure 33. Switching Time Measurement Waveform

© 2021 ROHM Co., Ltd. All rights reserved.

chanhvinh.com

Timing Chart

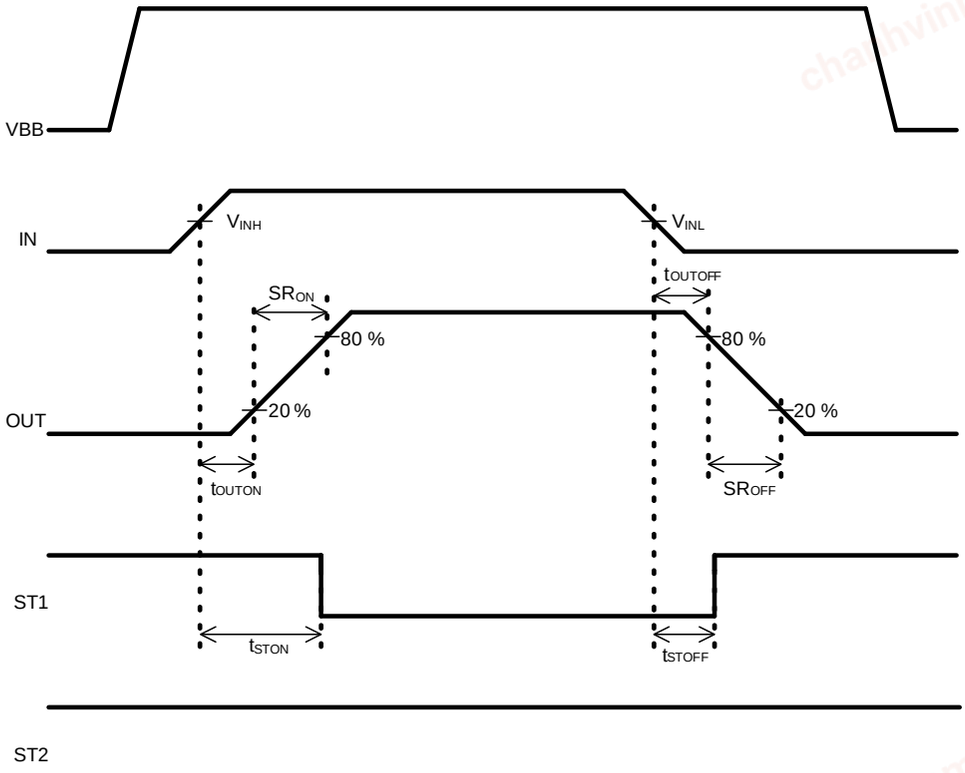

Figure 34. Timing Chart

© 2021 ROHM Co., Ltd. All rights reserved.

chanhvinh.com

Function Description

1. Protection Function

Table 1. Detection and Release Conditions of Each Protection Function and Diagnostic Output

Mode		Conditions	IN	ST1	ST2
Normal Condition	Standby	-	Low	High	High
	Operating	-	High	Low	High
Open Load Detect (OLD)		Detect V_{OUT} ≥ 3.0 V (Typ)	Low	Low	High
		Release V_{OUT} ≤ 2.4 V (Typ)	Low	High	High
Short to VBB Detection		Detect V_{OUT} > VBB - 1.2 V (Typ)	Low	Low	Low
		Release V_{OUT} < VBB - 2.0 V (Typ)	Low	Low	High
Low Voltage Output OFF (UVLO)		Detect V_{BB} ≤ 5.0 V (Max)	High	High	High
		Release V_{BB} ≥ 6.0 V (Max)	High	Low	High
Thermal Shutdown (TSD) *(Note 1)*		Detect Tj ≥ 175 °C (Typ)	High	High	High
		Release Tj ≤ 160 °C (Typ)	High	Low	High
ΔTj Protection *(Note 2)*		Detect ΔTj ≥ 120 °C (Typ)	High	High	High
		Release ΔTj ≤ 80 °C (Typ)	High	Low	High
Over Current Protection (OCP)		Detect I_{OUT} ≥ 4.0 A (Typ)	High	High	High
		Release I_{OUT} < 4.0 A (Typ)	High	Low	High

(Note 1) Thermal shutdown is automatically restored to normal operation.
(Note 2) Protect function by detecting PowerMOS sharp increase of temperature difference with control circuit.

This IC has a built-in protection detection function as mentioned above and outputs the abnormal condition with ST1 and ST2 pins.

ST1 is output for output detect and each protect function.
ST1 change from High to Low when OUT rise by near VBB during normal operation.
And change from Low to High when detect each protection or OUT is less than VBB - 1.2 V (Typ).

ST2 is output for open load detection and Short to VBB detection during IN = Low.

It is self-rest and operation becomes normal when each protection releases after detecting.

© 2021 ROHM Co., Ltd. All rights reserved.

chanhvinh.com

Function Description - continued

2. Overcurrent Protection

This IC has a built-in overcurrent protection function. When overcurrent flows in the output, the output current is limited to 4.0 A (Typ) and self-diagnostic output 1 (ST1) becomes High.

3. Thermal Shutdown and ΔTj Protection Detection

3.1 Thermal Shutdown Protection

This IC has a built-in thermal shutdown protection function. When the IC chip temperature exceeds175 °C (Typ), the output is turned OFF and self-diagnostic output 1 (ST1) becomes High. When the temperature goes below 160 °C (Typ), output will self-reset and operation becomes normal.

3.2 ΔTj Protection

This IC has a built-in ΔTj protection function that turns OFF the output when the temperature difference (T_{DTJ}) between the POWER-MOS unit ($T_{POWER-MOS}$) and the control unit (T_{AMB}) in the IC is 120 °C (Typ) or more. ΔTj protection also has a built-in hysteresis (T_{DTJHYS}) that returns the output to normal state when the temperature difference becomes 80 °C (Typ) or less.
Figure 35 shows the timing chart of thermal shutdown protection and ΔTj protection during output short to GND fault.

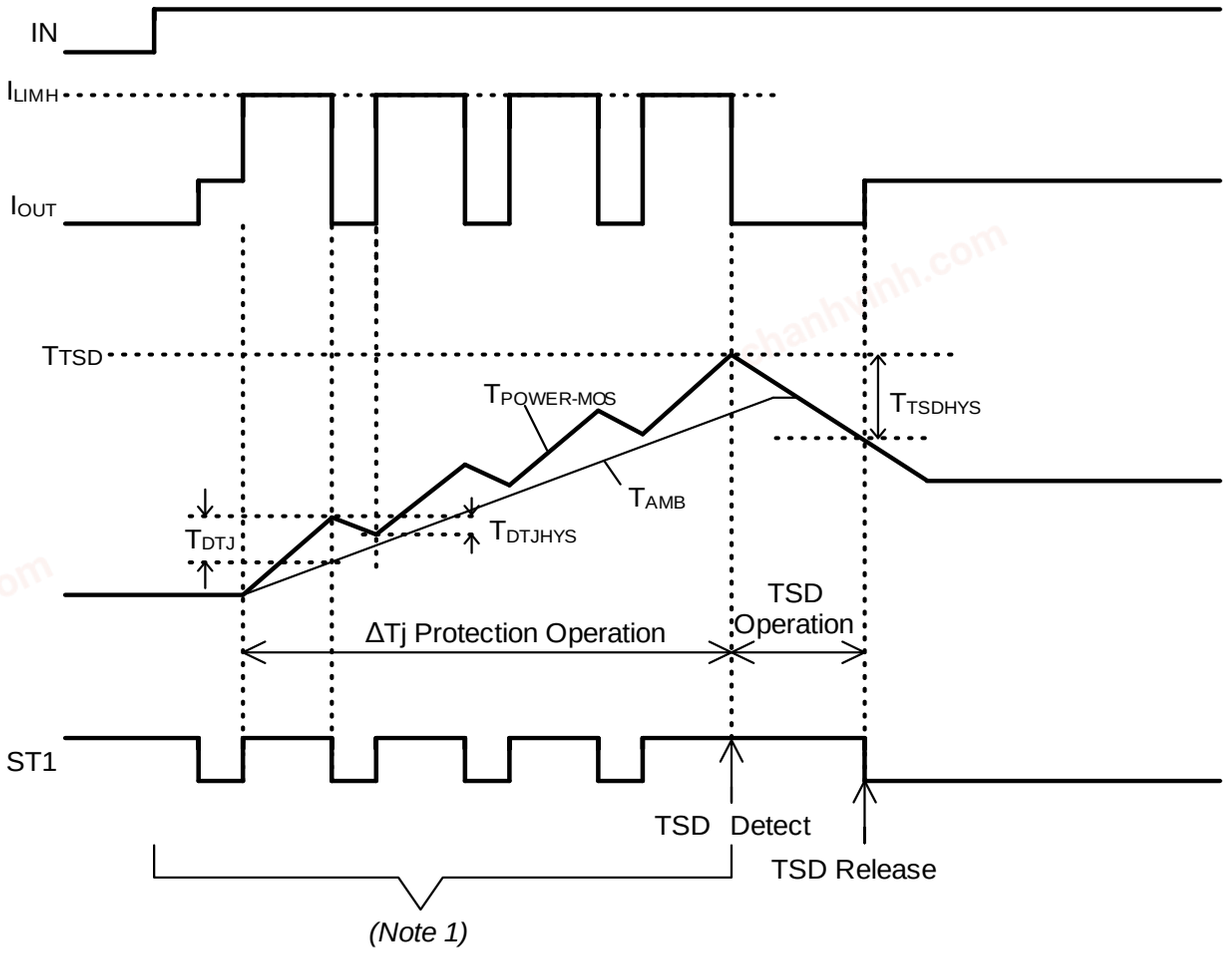

Figure 35. Thermal Shutdown Protection and ΔTj Protection Timing Chart

(Note 1) When output voltage falls to output ON detection voltage (V_{SHV}) or less at the output to GND is shorted or rare short, IC is judged that the output voltage is abnormal. Hence, ST1, ST2 may not be able to turn low.

© 2021 ROHM Co., Ltd. All rights reserved.

chanhvinh.com

Function Description - continued

4. Open Load Detection

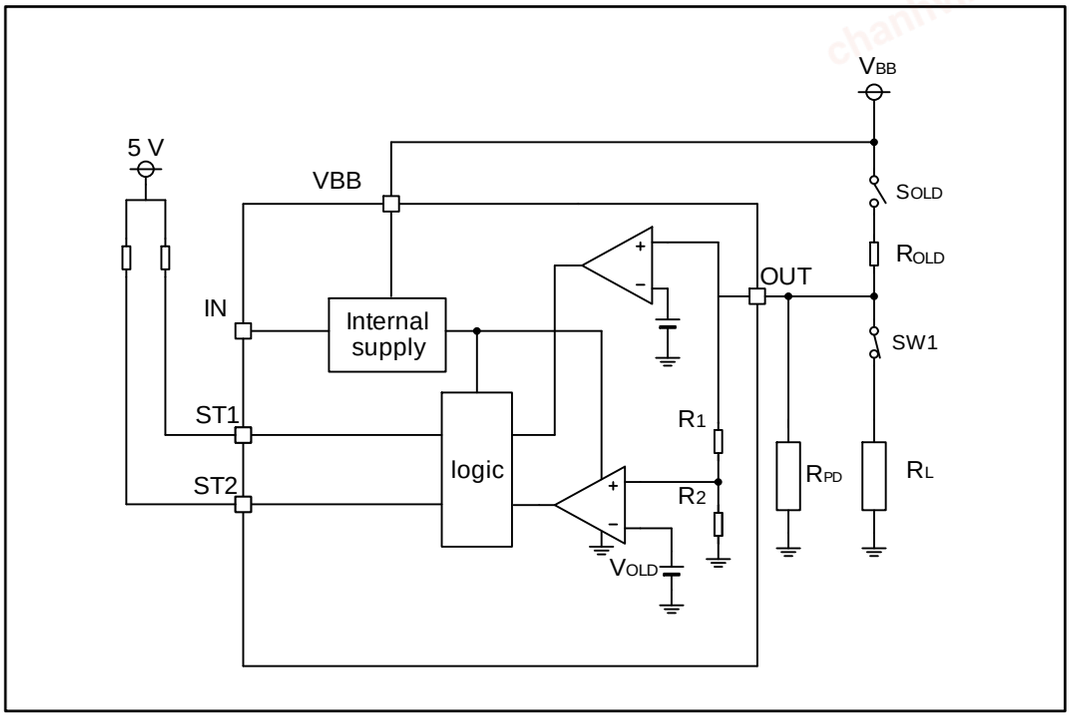

Figure 36. Open Load Detection Block Diagram

Open load can be detected by connecting an external resistance R_{OLD} between power supply V_{BB} and output.
When output load is disconnected during input is low, diagnostic output the ST1 pin is turned to low to indicate abnormality.
To reduce the standby current of the system, an open load resistance switch S_{OLD} is recommended.
When the SW1 is OFF, voltage of the OUT does not fall to GND level. Because, when the IN pin is low, the voltage of the OUT pin does not become under or equal to the Output ON Detection Voltage (V_{DSDET}). To pulled down the OUT pin, pulled down resistance R_{PD} is recommended. The resistance R_{PD} is 4.3 kΩ or less for outflow current from the OUT pin.

4.1 When the OUT is pulled down by the load (Normal function)

The value of external resistance R_{OLD} is decided based on used minimum power supply voltage (V_{BB}), internal resistance R_1 and R_2 and open detection voltage V_{OLD}. External resistance R_{PD} is unnecessary.
The equation for calculating the R_{OLD} value is shown below.

$$R_{OLD} < \frac{V_{BB} \times \left(R_{1(Min)} + R_{2(Min)} \right)}{V_{OLD(\mathrm{Max})}} - \left(R_{1(Min)} + R_{2(Min)} \right) \ [\Omega]$$

The above formula is summarized as follows.

$$R_{OLD} < V_{BB} \times 75 \times 10^3 - 300 \times 10^3 \ [\Omega]$$

R_{OLD} value is fell below the above calculated result.

4.2 If the SW is OFF, the output is no longer pulled down by the load

The value of external resistance R_{OLD} is decided based on used minimum power supply voltage (V_{BB}), external resistance R_{PD} and open detection voltage V_{OLD}.
The equation for calculating the R_{OLD} value is shown below.

$$R_{OLD} < \frac{V_{BB} \times R_{PD}}{V_{OLD(\mathrm{Max})}} - R_{PD} \ [\Omega]$$

When R_{PD} is 4.3 kΩ, the above formula is summarized as follows.

$$R_{OLD} < V_{BB} \times 1.075 \times 10^3 - 4.3 \times 10^3 \ [\Omega]$$

R_{OLD} value is fell below the above calculated result

© 2021 ROHM Co., Ltd. All rights reserved.

chanhvinh.com

Function Description - continued

5. Other Detection

5.1 GND open protection

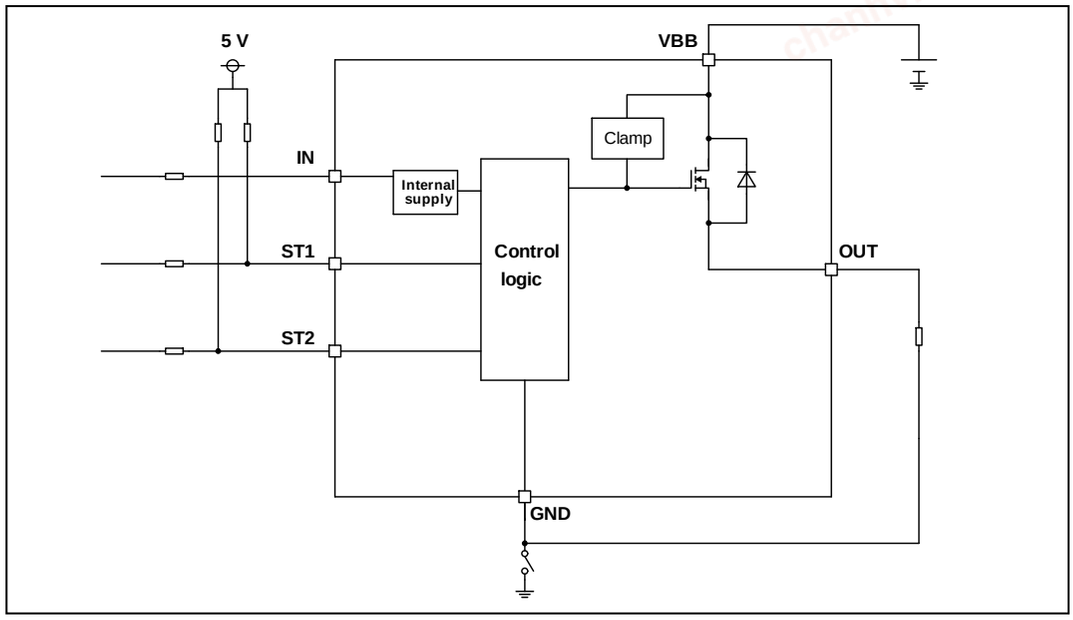

Figure 37. GND Open Detection Block Diagram

When GND of the IC is open, the output is switched OFF regardless of the input voltage.
However, self-diagnostic output (ST1, ST2) is not flagged. When an inductive load is connected, the active clamp operates when the GND pin is open

5.2 Reverse-Battery Connection Protection

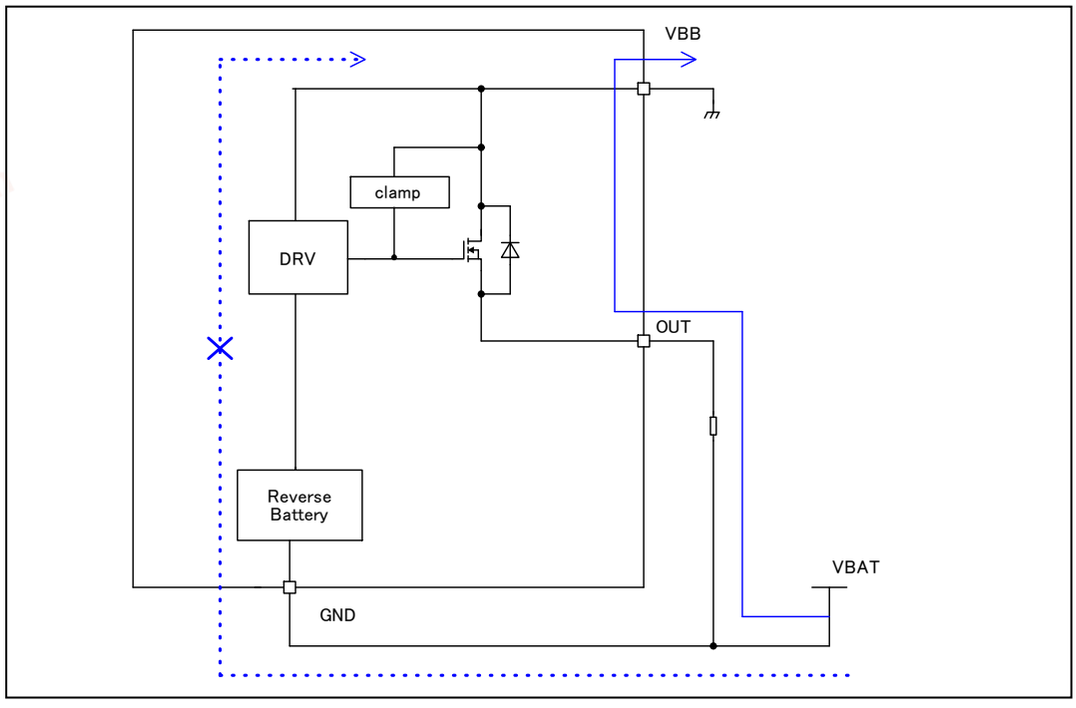

Figure 38. Reverse-Battery Connection Block Diagram

When the battery connection is reversed, an excessive amount of current will flow to internal part of IC and this may sometimes lead to IC destruction.
As a countermeasure, this IC has a built-in reverse battery connection protection function without external components such as resistors and diodes.

© 2021 ROHM Co., Ltd. All rights reserved.

chanhvinh.com

Function Description - continued

5.3 MCU I/O Protection

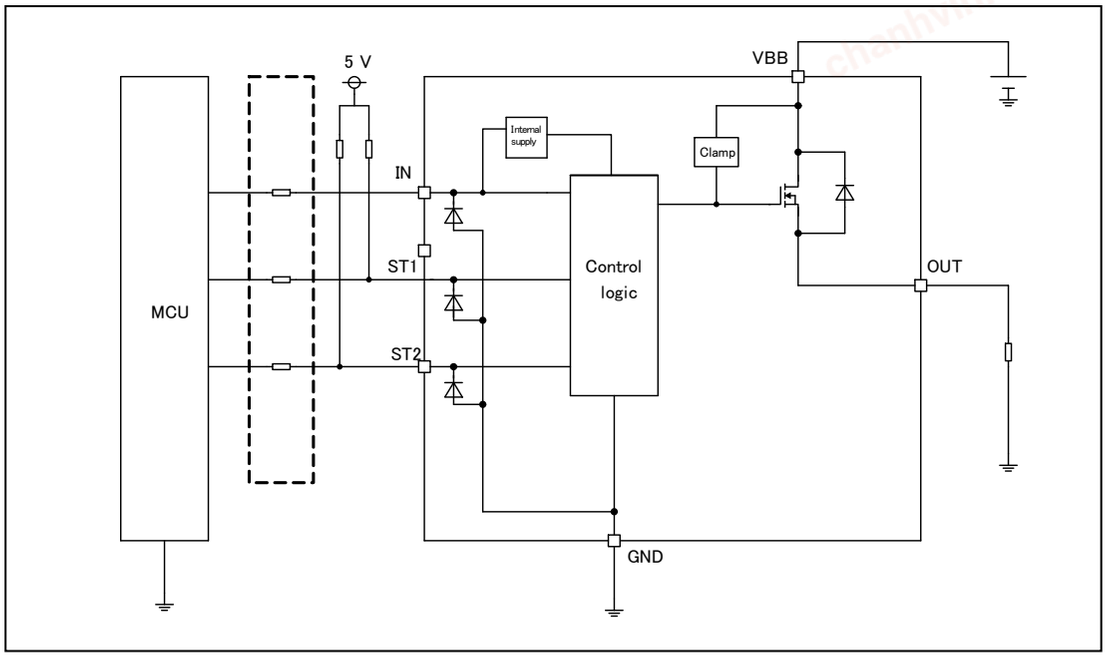

Figure 39. MCU I/O Protection

Negative surge voltage to the IN pin, the ST1 pin and the ST2 pin may cause damage to the MCU's I/O pins. In order to prevent those damages, it is recommended to insert limiting resistors between IC pins and MCU.

© 2021 ROHM Co., Ltd. All rights reserved.

chanhvinh.com

Application Circuit Diagram

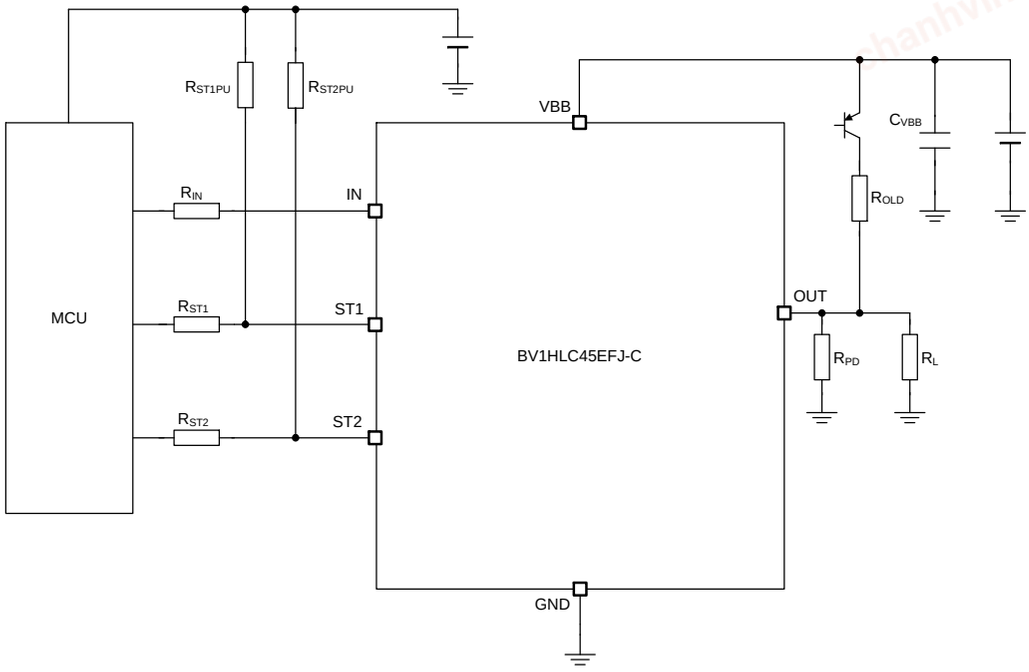

Figure 40. Application Circuit Diagram

Symbol	Value	Purpose
R_{IN}	4.7 kΩ	Limit resistance for negative surge
R_{ST1}, R_{ST2}	4.7 kΩ	Limit resistance for negative surge
R_{ST1PU}, R_{ST2PU}	10 kΩ	Pull up ST1/ST2 pin to MCU power supply, these pins are open drain output
C_{VBB}	1 µF	For battery line voltage spike filter
R_{PD}	4.3 kΩ	For output pulled down
R_{OLD}	2 kΩ	For open load detection

© 2021 ROHM Co., Ltd. All rights reserved.

chanhvinh.com

I/O Equivalence Circuits

IN	ST1, ST2
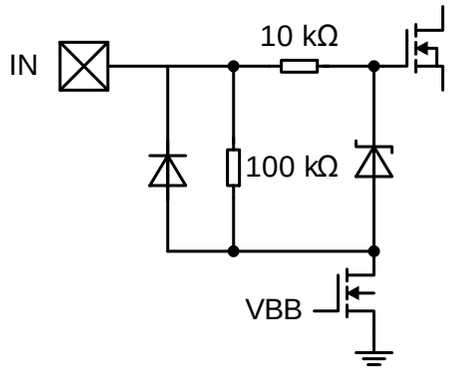	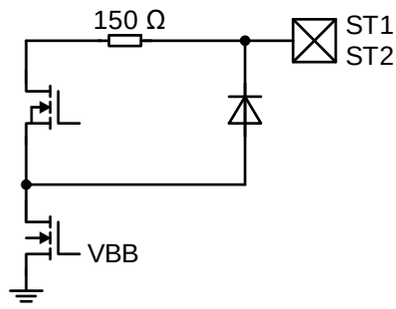
OUT	
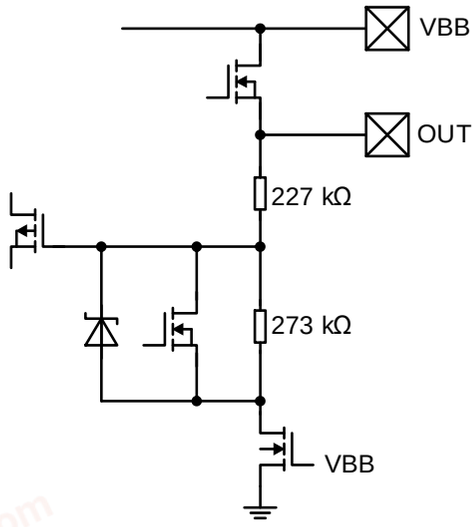	

Resistance values shown in the diagrams above are typical values.

© 2021 ROHM Co., Ltd. All rights reserved.

chanhvinh.com

Operational Notes

1. **Reverse Connection of Power Supply**
Connecting the power supply in reverse polarity can damage the IC. Take precautions against reverse polarity when connecting the power supply, such as mounting an external diode between the power supply and the IC's power supply pins.

2. **Power Supply Lines**
Design the PCB layout pattern to provide low impedance supply lines. Furthermore, connect a capacitor to ground at all power supply pins. Consider the effect of temperature and aging on the capacitance value when using electrolytic capacitors.

3. **Ground Voltage**
Except for pins the output and the input of which were designed to go below ground, ensure that no pins are at a voltage below that of the ground pin at any time, even during transient condition.

4. **Ground Wiring Pattern**
When using both small-signal and large-current ground traces, the two ground traces should be routed separately but connected to a single ground at the reference point of the application board to avoid fluctuations in the small-signal ground caused by large currents. Also ensure that the ground traces of external components do not cause variations on the ground voltage. The ground lines must be as short and thick as possible to reduce line impedance.

5. **Recommended Operating Conditions**
The function and operation of the IC are guaranteed within the range specified by the recommended operating conditions. The characteristic values are guaranteed only under the conditions of each item specified by the electrical characteristics.

6. **Inrush Current**
When power is first supplied to the IC, it is possible that the internal logic may be unstable and inrush current may flow instantaneously due to the internal powering sequence and delays, especially if the IC has more than one power supply. Therefore, give special consideration to power coupling capacitance, power wiring, width of ground wiring, and routing of connections.

7. **Testing on Application Boards**
When testing the IC on an application board, connecting a capacitor directly to a low-impedance output pin may subject the IC to stress. Always discharge capacitors completely after each process or step. The IC's power supply should always be turned off completely before connecting or removing it from the test setup during the inspection process. To prevent damage from static discharge, ground the IC during assembly and use similar precautions during transport and storage.

8. **Inter-pin Short and Mounting Errors**
Ensure that the direction and position are correct when mounting the IC on the PCB. Incorrect mounting may result in damaging the IC. Avoid nearby pins being shorted to each other especially to ground, power supply and output pin. Inter-pin shorts could be due to many reasons such as metal particles, water droplets (in very humid environment) and unintentional solder bridge deposited in between pins during assembly to name a few.

9. **Unused Input Pins**
Input pins of an IC are often connected to the gate of a MOS transistor. The gate has extremely high impedance and extremely low capacitance. If left unconnected, the electric field from the outside can easily charge it. The small charge acquired in this way is enough to produce a significant effect on the conduction through the transistor and cause unexpected operation of the IC. So unless otherwise specified, unused input pins should be connected to the power supply or ground line.

10. **Ceramic Capacitor**
When using a ceramic capacitor, determine a capacitance value considering the change of capacitance with temperature and the decrease in nominal capacitance due to DC bias and others.

11. **Thermal Shutdown Function (TSD)**
This IC has a built-in thermal shutdown function that prevents heat damage to the IC. Normal operation should always be within the IC's maximum junction temperature rating. If however the rating is exceeded for a continued period, the junction temperature (Tj) will rise which will activate the TSD function that will turn OFF power output pins. When the Tj falls below the TSD threshold, the circuits are automatically restored to normal operation.
Note that the TSD function operates in a situation that exceeds the absolute maximum ratings and therefore, under no circumstances, should the TSD function be used in a set design or for any purpose other than protecting the IC from heat damage.

© 2021 ROHM Co., Ltd. All rights reserved.

chanhvinh.com

Operational Notes – continued

12. **Over Current Protection Function (OCP)**
This IC incorporates an integrated overcurrent protection function that is activated when the load is shorted. This protection function is effective in preventing damage due to sudden and unexpected incidents. However, the IC should not be used in applications characterized by continuous operation or transitioning of the protection function.

13. **Active Clamp Operation**
The IC integrates the active clamp function to internally absorb the reverse energy E_L which is generated when the inductive load is turned off. When the active clamp operates, the thermal shutdown function does not work. Decide a load so that the reverse energy E_L is active clamp tolerance E_{AS} (refer to Figure 24. Active Clamp Energy vs Output Current) or under when inductive load is used.

14. **Open Power Supply Pin**
When the power supply pin (VBB) becomes open at ON (IN = High), the output is switched to OFF regardless of input voltage. If an inductive load is connected, the active clamp operates when VBB is open and becomes the same potential as that on the ground. At this time, the output voltage drops down to -50 V (Typ).

15. **Open GND Pin**
When the GND pin becomes open at ON (IN = High), the output is switched to OFF regardless of input voltage. If an inductive load is connected, the active clamp operates when the GND pin is open.

16. **OUT Pin Voltage**
Ensure that keep OUT pin voltage less than (VBB + 0.3 V) at any time, even during transient condition. Otherwise malfunction or other problems can occur.

© 2021 ROHM Co., Ltd. All rights reserved.

chanhvinh.com

Ordering Information

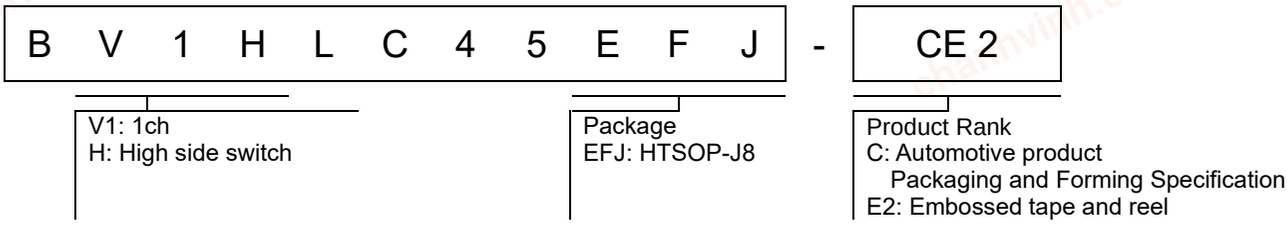

Marking Diagram

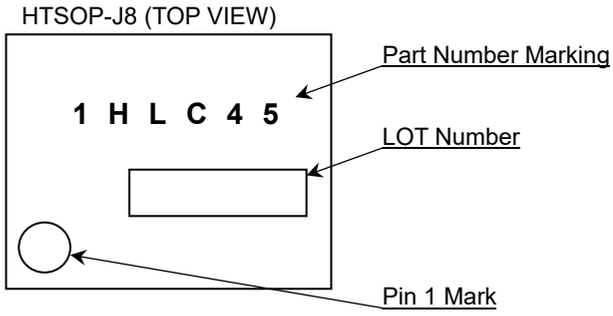

© 2021 ROHM Co., Ltd. All rights reserved.

chanhvinh.com

Physical Dimension and Packing Information

Package Name	HTSOP-J8

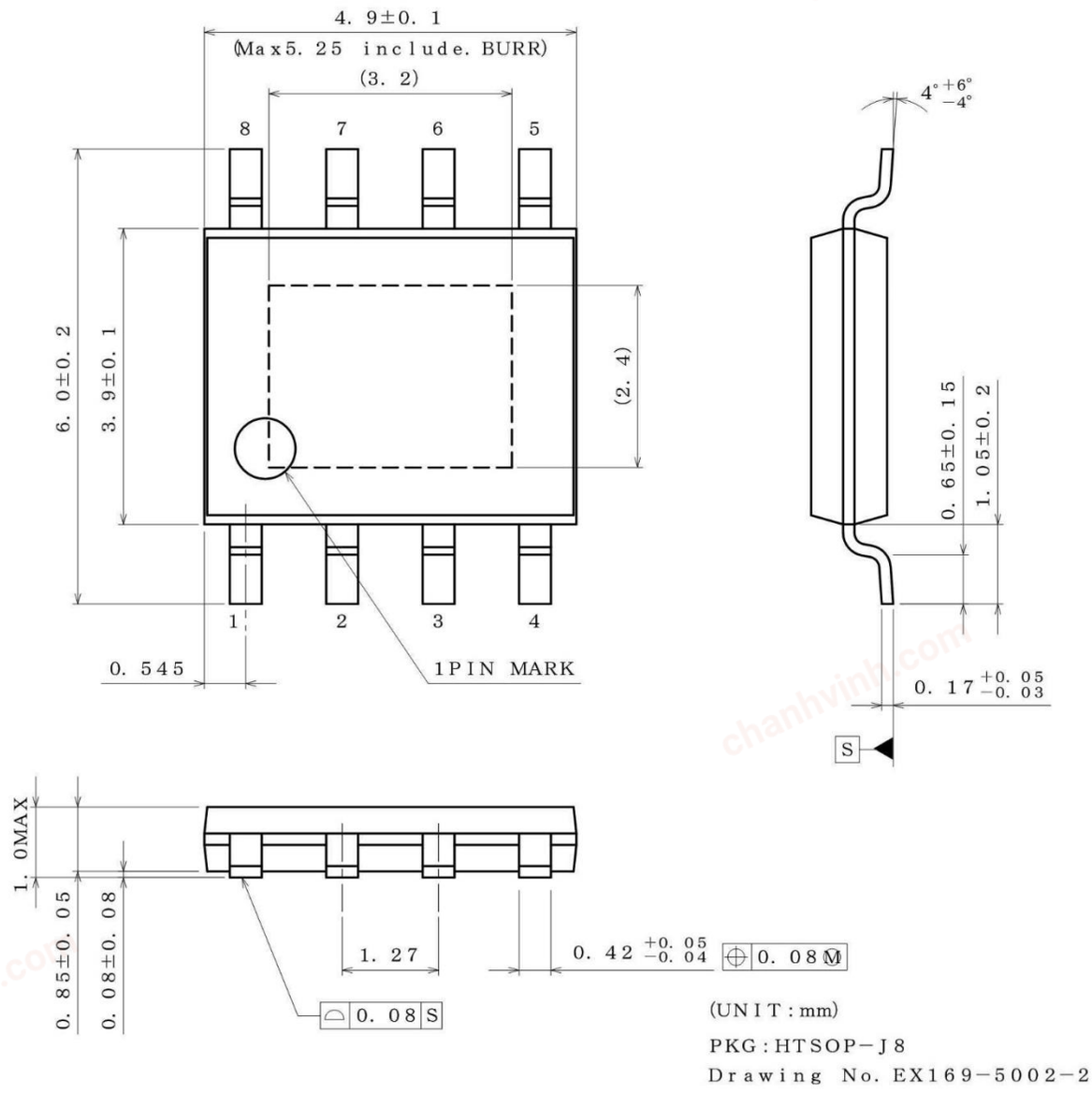

< Tape and Reel Information >

Tape	Embossed carrier tape
Quantity	2500pcs
Direction of feed	E2 The direction is the pin 1 of product is at the upper left when you hold reel on the left hand and you pull out the tape on the right hand

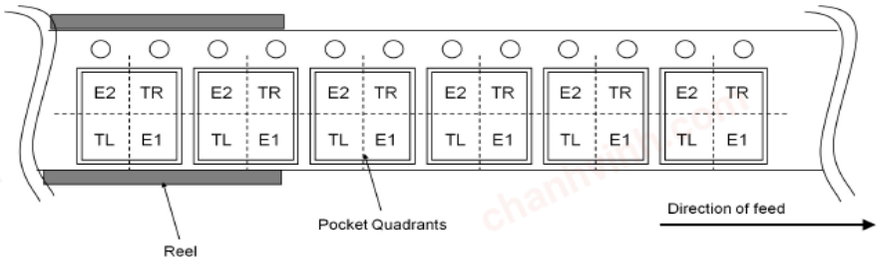

© 2021 ROHM Co., Ltd. All rights reserved.

chanhvinh.com

Revision History

Date	Revision	Changes
03.Sep.2021	001	New Release
09.Feb.2023	002	P.5 Absolute Maximum Ratings Change the condition of E_{AS} from I_{OUT} = 4 A to I_{OUT} = 2 A. P.6 Thermal Resistance Figure 2 - Change the size of PCB layout. P.15 Typical Performance Curves Figure 24 - Change the graph of E_{AS}. P.28 Operational Notes 14. Open Power Supply Pin Change the value of output clamp voltage.

© 2021 ROHM Co., Ltd. All rights reserved.

chanhvinh.com

Notice

Precaution on using ROHM Products

1. If you intend to use our Products in devices requiring extremely high reliability (such as medical equipment (Note 1), aircraft/spacecraft, nuclear power controllers, etc.) and whose malfunction or failure may cause loss of human life, bodily injury or serious damage to property ("Specific Applications"), please consult with the ROHM sales representative in advance. Unless otherwise agreed in writing by ROHM in advance, ROHM shall not be in any way responsible or liable for any damages, expenses or losses incurred by you or third parties arising from the use of any ROHM's Products for Specific Applications.

(Note1) Medical Equipment Classification of the Specific Applications

JAPAN	USA	EU	CHINA
CLASSⅢ	CLASSⅢ	CLASSⅡb	CLASSⅢ
CLASSⅣ		CLASSⅢ	

2. ROHM designs and manufactures its Products subject to strict quality control system. However, semiconductor products can fail or malfunction at a certain rate. Please be sure to implement, at your own responsibilities, adequate safety measures including but not limited to fail-safe design against the physical injury, damage to any property, which a failure or malfunction of our Products may cause. The following are examples of safety measures:
   [a] Installation of protection circuits or other protective devices to improve system safety
   [b] Installation of redundant circuits to reduce the impact of single or multiple circuit failure

3. Our Products are not designed under any special or extraordinary environments or conditions, as exemplified below. Accordingly, ROHM shall not be in any way responsible or liable for any damages, expenses or losses arising from the use of any ROHM's Products under any special or extraordinary environments or conditions. If you intend to use our Products under any special or extraordinary environments or conditions (as exemplified below), your independent verification and confirmation of product performance, reliability, etc, prior to use, must be necessary:
   [a] Use of our Products in any types of liquid, including water, oils, chemicals, and organic solvents
   [b] Use of our Products outdoors or in places where the Products are exposed to direct sunlight or dust
   [c] Use of our Products in places where the Products are exposed to sea wind or corrosive gases, including Cl_2, H_2S, NH_3, SO_2, and NO_2
   [d] Use of our Products in places where the Products are exposed to static electricity or electromagnetic waves
   [e] Use of our Products in proximity to heat-producing components, plastic cords, or other flammable items
   [f] Sealing or coating our Products with resin or other coating materials
   [g] Use of our Products without cleaning residue of flux (Exclude cases where no-clean type fluxes is used. However, recommend sufficiently about the residue.); or Washing our Products by using water or water-soluble cleaning agents for cleaning residue after soldering
   [h] Use of the Products in places subject to dew condensation

4. The Products are not subject to radiation-proof design.

5. Please verify and confirm characteristics of the final or mounted products in using the Products.

6. In particular, if a transient load (a large amount of load applied in a short period of time, such as pulse, is applied, confirmation of performance characteristics after on-board mounting is strongly recommended. Avoid applying power exceeding normal rated power; exceeding the power rating under steady-state loading condition may negatively affect product performance and reliability.

7. De-rate Power Dissipation depending on ambient temperature. When used in sealed area, confirm that it is the use in the range that does not exceed the maximum junction temperature.

8. Confirm that operation temperature is within the specified range described in the product specification.

9. ROHM shall not be in any way responsible or liable for failure induced under deviant condition from what is defined in this document.

Precaution for Mounting / Circuit board design

1. When a highly active halogenous (chlorine, bromine, etc.) flux is used, the residue of flux may negatively affect product performance and reliability.

2. In principle, the reflow soldering method must be used on a surface-mount products, the flow soldering method must be used on a through hole mount products. If the flow soldering method is preferred on a surface-mount products, please consult with the ROHM representative in advance.

For details, please refer to ROHM Mounting specification

© 2015 ROHM Co., Ltd. All rights reserved.

chanhvinh.com

Precautions Regarding Application Examples and External Circuits

1. If change is made to the constant of an external circuit, please allow a sufficient margin considering variations of the characteristics of the Products and external components, including transient characteristics, as well as static characteristics.

2. You agree that application notes, reference designs, and associated data and information contained in this document are presented only as guidance for Products use. Therefore, in case you use such information, you are solely responsible for it and you must exercise your own independent verification and judgment in the use of such information contained in this document. ROHM shall not be in any way responsible or liable for any damages, expenses or losses incurred by you or third parties arising from the use of such information.

Precaution for Electrostatic

This Product is electrostatic sensitive product, which may be damaged due to electrostatic discharge. Please take proper caution in your manufacturing process and storage so that voltage exceeding the Products maximum rating will not be applied to Products. Please take special care under dry condition (e.g. Grounding of human body / equipment / solder iron, isolation from charged objects, setting of Ionizer, friction prevention and temperature / humidity control).

Precaution for Storage / Transportation

1. Product performance and soldered connections may deteriorate if the Products are stored in the places where:
   - [a] the Products are exposed to sea winds or corrosive gases, including Cl_2, H_2S, NH_3, SO_2, and NO_2
   - [b] the temperature or humidity exceeds those recommended by ROHM
   - [c] the Products are exposed to direct sunshine or condensation
   - [d] the Products are exposed to high Electrostatic

2. Even under ROHM recommended storage condition, solderability of products out of recommended storage time period may be degraded. It is strongly recommended to confirm solderability before using Products of which storage time is exceeding the recommended storage time period.

3. Store / transport cartons in the correct direction, which is indicated on a carton with a symbol. Otherwise bent leads may occur due to excessive stress applied when dropping of a carton.

4. Use Products within the specified time after opening a humidity barrier bag. Baking is required before using Products of which storage time is exceeding the recommended storage time period.

Precaution for Product Label

A two-dimensional barcode printed on ROHM Products label is for ROHM's internal use only.

Precaution for Disposition

When disposing Products please dispose them properly using an authorized industry waste company.

Precaution for Foreign Exchange and Foreign Trade act

Since concerned goods might be fallen under listed items of export control prescribed by Foreign exchange and Foreign trade act, please consult with ROHM in case of export.

Precaution Regarding Intellectual Property Rights

1. All information and data including but not limited to application example contained in this document is for reference only. ROHM does not warrant that foregoing information or data will not infringe any intellectual property rights or any other rights of any third party regarding such information or data.

2. ROHM shall not have any obligations where the claims, actions or demands arising from the combination of the Products with other articles such as components, circuits, systems or external equipment (including software).

3. No license, expressly or implied, is granted hereby under any intellectual property rights or other rights of ROHM or any third parties with respect to the Products or the information contained in this document. Provided, however, that ROHM will not assert its intellectual property rights or other rights against you or your customers to the extent necessary to manufacture or sell products containing the Products, subject to the terms and conditions herein.

Other Precaution

1. This document may not be reprinted or reproduced, in whole or in part, without prior written consent of ROHM.

2. The Products may not be disassembled, converted, modified, reproduced or otherwise changed without prior written consent of ROHM.

3. In no event shall you use in any way whatsoever the Products and the related technical information contained in the Products or this document for any military purposes, including but not limited to, the development of mass-destruction weapons.

4. The proper names of companies or products described in this document are trademarks or registered trademarks of ROHM, its affiliated companies or third parties.

© 2015 ROHM Co., Ltd. All rights reserved.

chanhvinh.com

General Precaution

1. Before you use our Products, you are requested to carefully read this document and fully understand its contents. ROHM shall not be in any way responsible or liable for failure, malfunction or accident arising from the use of any ROHM's Products against warning, caution or note contained in this document.

2. All information contained in this document is current as of the issuing date and subject to change without any prior notice. Before purchasing or using ROHM's Products, please confirm the latest information with a ROHM sales representative.

3. The information contained in this document is provided on an "as is" basis and ROHM does not warrant that all information contained in this document is accurate and/or error-free. ROHM shall not be in any way responsible or liable for any damages, expenses or losses incurred by you or third parties resulting from inaccuracy or errors of or concerning such information.

© 2015 ROHM Co., Ltd. All rights reserved.