chanhvinh.com

Datasheet

Constant Current LED Drivers

50V 500mA
1ch Source Driver for Automotive

BD83740HFP-M BD83740EFJ-M

General Description

BD8374HFP-M and BD8374EFJ-M are 50V-withstanding LED source drivers. Most suitably for Automotive LED driving, it can control light through PWM of constant current output.
Having LED open detective function and overvoltage mute function integrated, it can deliver high reliability.
Also by utilizing our patented PBUS function, it is possible to turn OFF all LEDs in case where a row of LEDs are opened if multiple rows of LEDs are driven through multiple number of the ICs.

Key Specifications

- Input Voltage Range: 4.5V to 42V
- Max Output Current: 500mA (Max)
- Output Current Accuracy: ±5% (Max)
- Operating Temperature Range: -40°C to +125°C

Packages

	W(Typ) x D(Typ) x H(Max)
HRP7	9.395mm x 10.540mm x 2.005mm
HTSOP-J8	4.90mm x 6.00mm x 1.00mm

Features

- AEC-Q100 Qualified(Note1)
- Variable form Constant-Current Source Driver
- PWM Dimming Function
- CR Timer for PWM Dimming Function Integrated
- LED Open detective Function Integrated
- Overvoltage Mute and Temperature Protection Functions Integrated
- Abnormal Output Detection and Output Functions (PBUS)

(Note1: Grade 1)



HRP7



HTSOP-J8

Application

- On-board Exterior Lamp
  (Rear Lamp, Turn Lamp, DRL/Position Lamp, Fog Lamp, etc.)
- On-board Interior Lamp
  (Air Conditioner Lamp, Interior Lamp, Cluster Light, etc.)

Basic Application Circuit

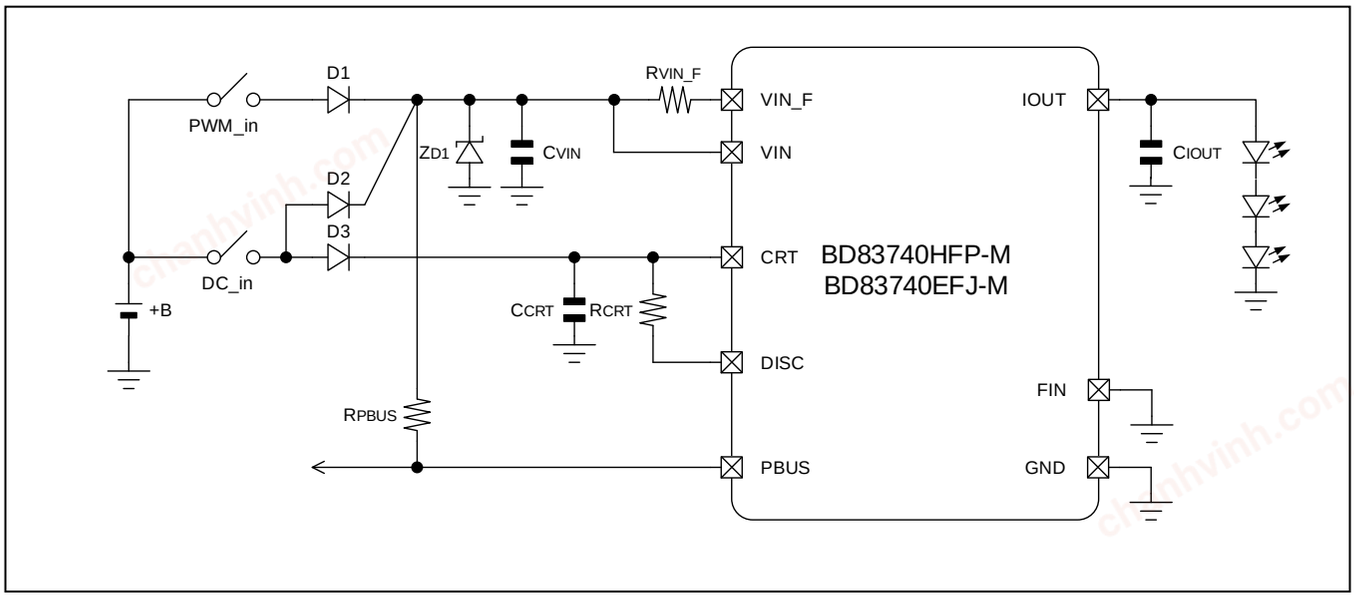

Figure 1. Typical Application Circuit

○Product configuration: Silicon monolithic integrated circuit ○ The product is not designed for radiation resistance.

© 2015 ROHM Co., Ltd. All rights reserved.

chanhvinh.com

Pin Configurations

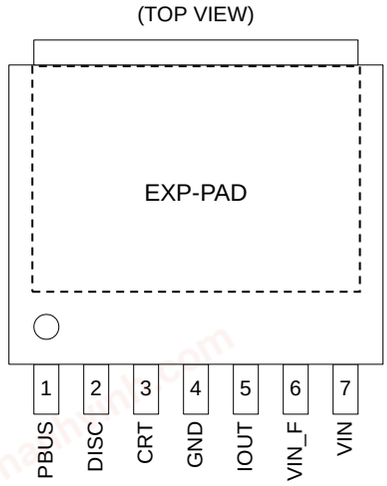

Figure 2. HRP7 Package Pin Configuration

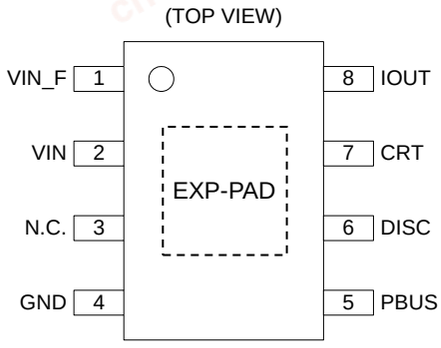

Figure 3. HTSOP-J8 Package Pin Configuration

Pin Descriptions

HRP7 Package

Pin No.	Pin Name	Function
1	PBUS	Error detection I/O
2	DISC	Discharge setting
3	CRT	PWM dimming timer setting
4	GND	GND
5	IOUT	Current output
6	VIN_F	Output current detection
7	VIN	Power supply input
-	EXP-PAD	Connect to GND

HTSOP-J8 Package

Pin No.	Pin Name	Function
1	VIN_F	Output current detection
2	VIN	Power supply input
3	N.C.	N.C.
4	GND	GND
5	PBUS	Error detection I/O
6	DISC	Discharge setting
7	CRT	PWM dimming timer setting
8	IOUT	Current output
-	EXP-PAD	Connect to GND

Block Diagram

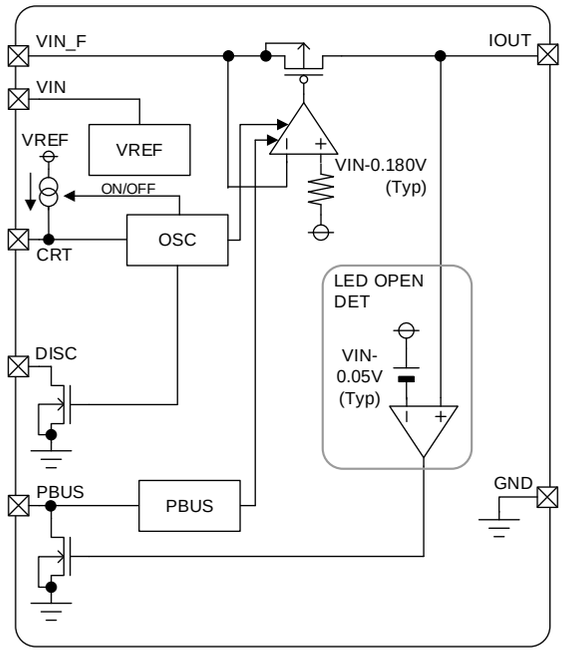

Figure 4. Block Diagram

© 2015 ROHM Co., Ltd. All rights reserved.

chanhvinh.com

Absolute Maximum Ratings (Ta=25°C)

Parameter	Symbol		Rating	Unit
Supply Voltage	V_{IN}		-0.3 to +50	V
VIN_F,CRT,DISC,IOUT,PBUS Terminal Voltage	V_{VIN_F},V_{CRT},V_{DISC},V_{IOUT},V_{PBUS}		-0.3 to V_{IN}+0.3	V
Power Dissipation	Pd	HRP7	2.29(Note1)	W
		HTSOP-J8	1.10(Note2)	
Operating Temperature Range	Topr		-40 to +125	°C
Storage Temperature Range	Tstg		-55 to +150	°C
Junction Temperature	Tjmax		150	°C
IOUT Output Maximum Current	I_{OUT}		500	mA

(Note1) HRP7
Derate by 18.4mW/°C when operating above Ta=25°C
(when mounted in ROHM's standard board(70mm x 70mm x 1.6mm) 2 layer copper foil(15mm x 15mm)).
(Note2) HTSOP-J8
Derate by 8.8mW/°C when operating above Ta=25°C
(when mounted in ROHM's standard board(70mm x 70mm x 1.6mm) 2 layer copper foil(15mm x 15mm)).

Caution: Operating the IC over the absolute maximum ratings may damage the IC. The damage can either be a short circuit between pins or an open circuit between pins and the internal circuitry. Therefore, it is important to consider circuit protection measures, such as adding a fuse, in case the IC is operated over the absolute maximum ratings.

Recommended Operating Conditions

Parameter	Symbol	Rating	Unit
Supply Voltage(Note1)	V_{IN}	4.5 to 42.0	V
Operating Temperature Range	Topr	-40 to +125	°C
Current Setting Resistor	R_{VIN_F}	0.36 to 3.6	Ω
Minimum capacitor connecting IOUT terminal	C_{IOUT_MIN}	0.1	μF
CRTIMER Frequency Rage	F_{PWM}	100 to 5000	Hz
PWM Minimum Pulse Width	T_{MIN}	20	μs

(Note1) Pd, ASO should not be exceeded

© 2015 ROHM Co., Ltd. All rights reserved.

chanhvinh.com

Electrical Characteristics(Unless otherwise specified Ta=-40 to +125°C, V_{IN}= 13V, R_{VIN_F}=0.47Ω, R_{PBUS}=10kΩ)

Parameter	Symbol	Min	Typ	Max	UNIT	Condition
Circuit Current	I_{VIN}	-	2.1	6.0	mA	
IOUT Terminal Output Current Accuracy	I_{OUT}	373	383	393	mA	Ta=25°C
		364	383	402	mA	Ta=-40°C to +125°C
VIN – IOUT Drop Voltage	V_{DR_IOUT}	-	0.45	1.0	V	I_{OUT}=383mA
IOUT Terminal OFF Current	I_{IOUT_OFF}	-	-	1	μA	V_{IOUT}=2V, V_{CRT}=0.7V Ta=25°C
VIN_F Terminal Voltage	$V_{IN_F_REF}$	0.171	0.180	0.189	V	$V_{IN_F_REF}$=V_{IN}-V_{IN_F}
IOUT Voltage at LED Open Detection	V_{IOUT_OPEN}	V_{IN} -0.15	V_{IN} -0.050	V_{IN} -0.020	V	
IOUT Voltage at LED Open Detection Release	$V_{IOUT_OPEN_RELEASE}$	V_{IN} -0.300	V_{IN} -0.150	V_{IN} -0.060	V	
CRT Terminal Charge Current	I_{CRT_SO}	29.75	35.00	40.25	μA	V_{CRT}=0.9V
CRT Terminal Charge Voltage	V_{CRT_CHA}	0.990	1.10	1.21	V	
CRT Terminal Discharge Voltage 1	V_{CRT_DIS1}	2.7	3.0	3.3	V	
CRT Terminal Discharge Voltage 2	V_{CRT_DIS2}	3.6	4.0	4.4	V	R_{D1}<->R_{D2}(Note1)
CRT Terminal Charge Resistance	R_{CHA}	51.6	54.3	57.0	kΩ	R_{CHA}=(V_{CRT_DIS1} − V_{CRT_CHA}) / I_{CRT_SO}
DISC Terminal Discharge Resistance 1	R_{D1}	-	50.0	100	Ω	V_{CRT}=3.4V
DISC Terminal Discharge Resistance 2	R_{D2}	2.5	5.0	10	kΩ	V_{CRT}=5V
PBUS Terminal Input Voltage High	V_{IH_PBUS}	4.0	-	V_{IN} +0.20	V	
PBUS Terminal Input Voltage Low	V_{IL_PBUS}	GND -0.20	-	2.0	V	
PBUS Terminal Low Voltage	V_{OL_PBUS}	-	-	1.5	V	I_{PBUS}=2mA
PBUS Terminal Input Current	I_{IN_PBUS}	-	38.0	100	μA	V_{PBUS}=13V
Overvoltage Mute	$V_{IN_OVPMUTE}$	27	29	33	V	V_{IOUT}=6V

(Note) This product is not designed for use in radioactive environments.
(Note1) Refer to Functional Description

© 2015 ROHM Co., Ltd. All rights reserved.

chanhvinh.com

Typical Performance Curves (Reference Data)

(Unless otherwise specified Ta=25°C, V_{IN}=V_{IN_F}=13V)

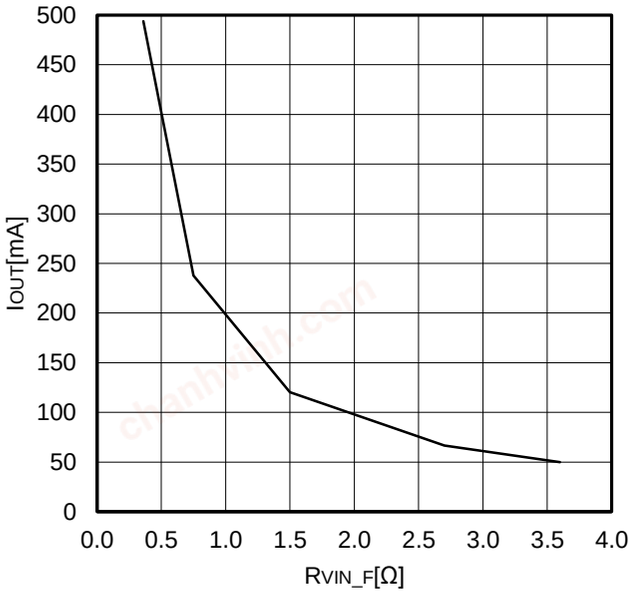

Figure 5. R_{VIN_F} vs I_{OUT}

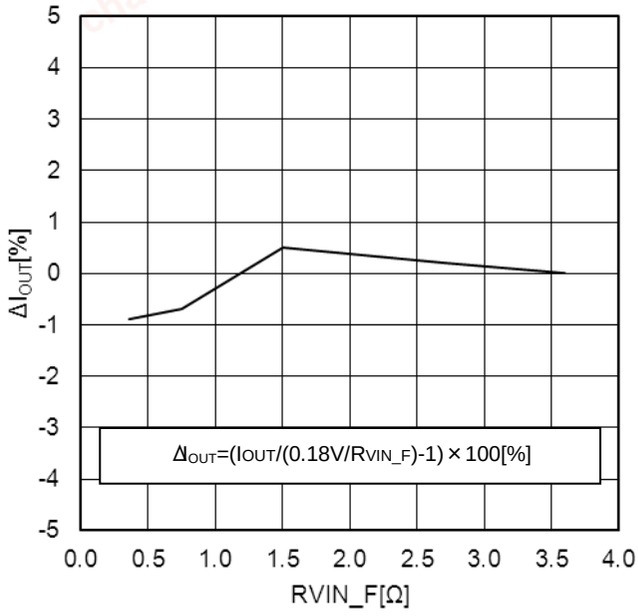

Figure 6. R_{VIN_F} vs ΔI_{OUT}

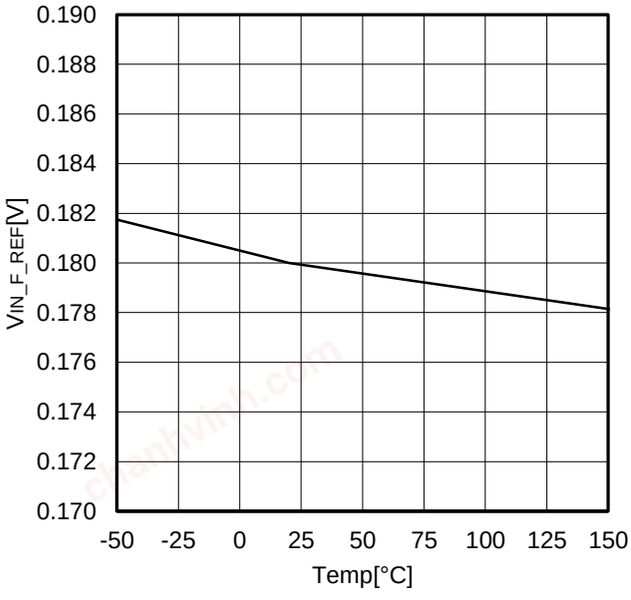

Figure 7. Temperature vs $V_{IN_F_REF}$

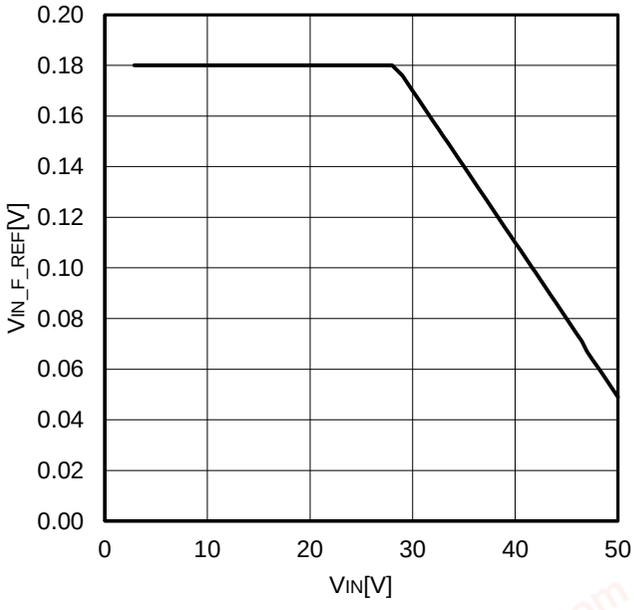

Figure 8. V_{IN} vs $V_{IN_F_REF}$

© 2015 ROHM Co., Ltd. All rights reserved.

chanhvinh.com

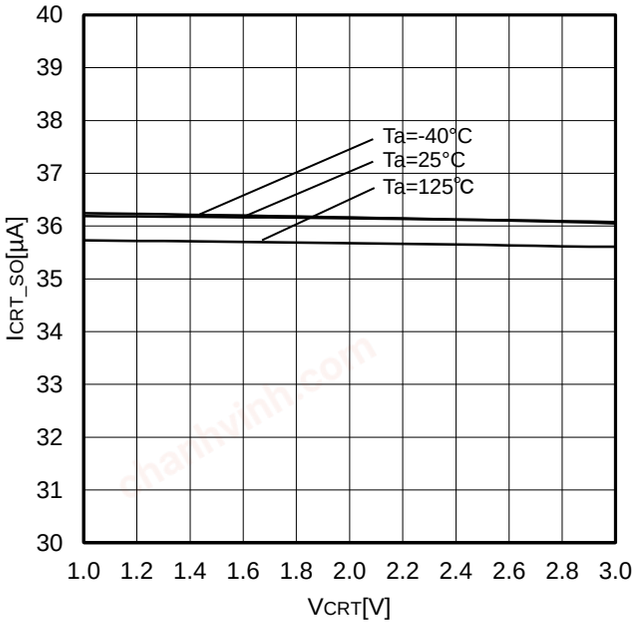

Figure 9. VCRT vs ICRT_SO
(VCRT:CRT Terminal Voltage)

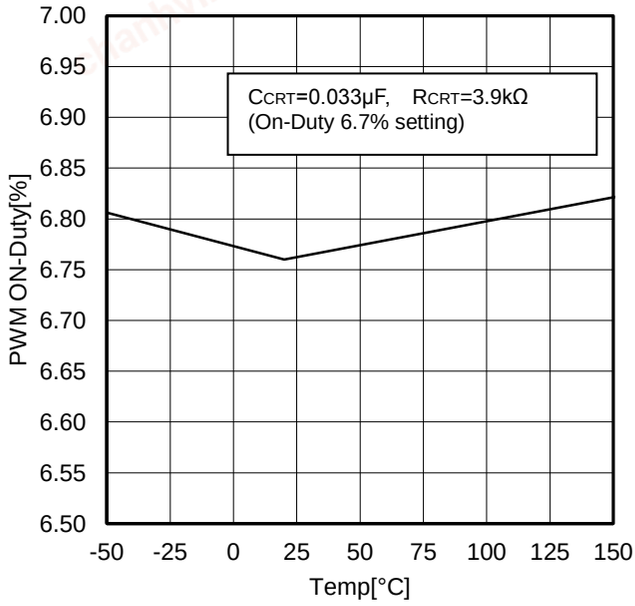

Figure 10. Temperature vs PWM ON Duty

© 2015 ROHM Co., Ltd. All rights reserved.

chanhvinh.com

Functional Description

(Unless otherwise specified, Ta=25°C, V_{IN}=13V, I_{OUT}=6V and R_{VIN_F}=0.47Ω. Numbers are "Typical" values.)

1. Output Current Setting

LED Current I_{OUT} can be set as below depending on values of current setting resistance R_{VIN_F}.

$$I_{OUT} = \frac{(V_{IN} - V_{IN_F})}{R_{VIN_F}} = \frac{V_{IN_F_REF}}{R_{VIN_F}} [A]$$

where:
$V_{IN_F_REF}$ is 0.18V (Typ)

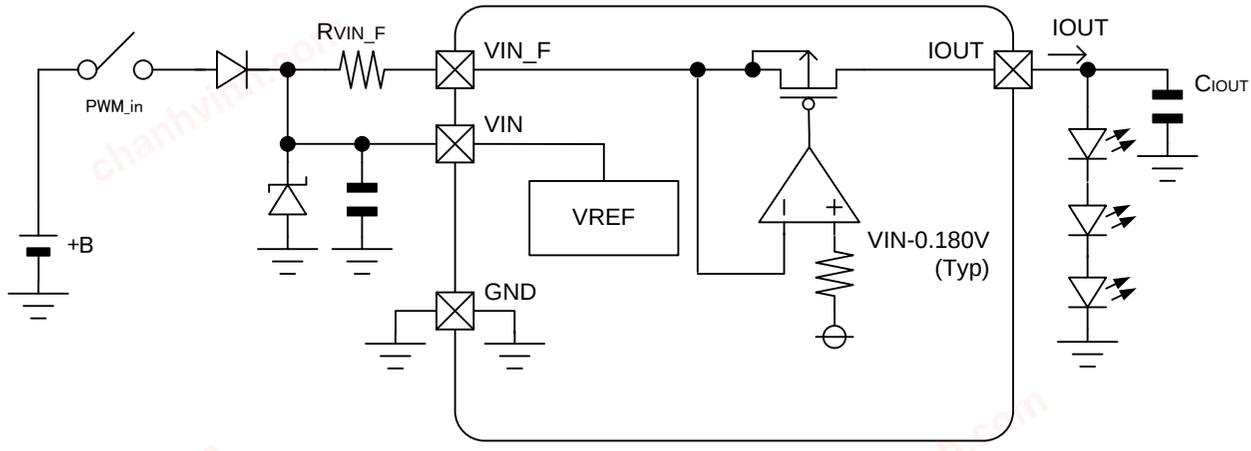

Figure 11. Output Current Setting

2. Table of Operations

PWM dimming mode switches to linear control depending on CRT terminal voltage.
When CRT terminal voltage surpasses V_{CRT_DIS2}(4.0V(Typ)), Dimming mode turns to Linear Control, and discharge resistance of DISC terminal changes from R_{D1}(50Ω(Typ)) to R_{D2}(5kΩ(Typ)).
LED open detection is activated depending on IOUT terminal voltage status, and output current is turned OFF.
Output current is also turned OFF when Low signal is input to PBUS terminal.

Operation Mode	CRT Terminal	IOUT Terminal Voltage (V_{IOUT})	Output Current (I_{OUT})	PBUS Terminal
Linear Control	4.0V(Typ)≤V_{CRT}	-	50mA to 500mA	Hi-Z
PWM dimming	See Features Description, 3. PWM Dimming Operation	-	See Features Description, 3 PWM Dimming Operation	Hi-Z
LED Open	-	V_{IOUT} ≥ VIN - 0.050V(Typ)	1μA(Max)	Low Output
PBUS Control OFF	-	-	1μA(Max)	Low Input

© 2015 ROHM Co., Ltd. All rights reserved.

chanhvinh.com

3. PWM Dimming Operation

PWM Dimming is performed if CRT terminal is the following circuit.
Dimming cycle and Duty width can be set through external resistance value and capacity.

CR timer function in IC is activated if DC_in is OPEN. In order to perform PWM light control of LED current, triangular waveform is generated at CRT terminal. Output is controlled so that **LED current is turned OFF** while CRT voltage is ramping up, and **LED current is turned ON** while CRT voltage is ramping down.
Ramp up/down time of CRT voltage can be set by values of external components **(C_{CRT}, R_{CRT})**.

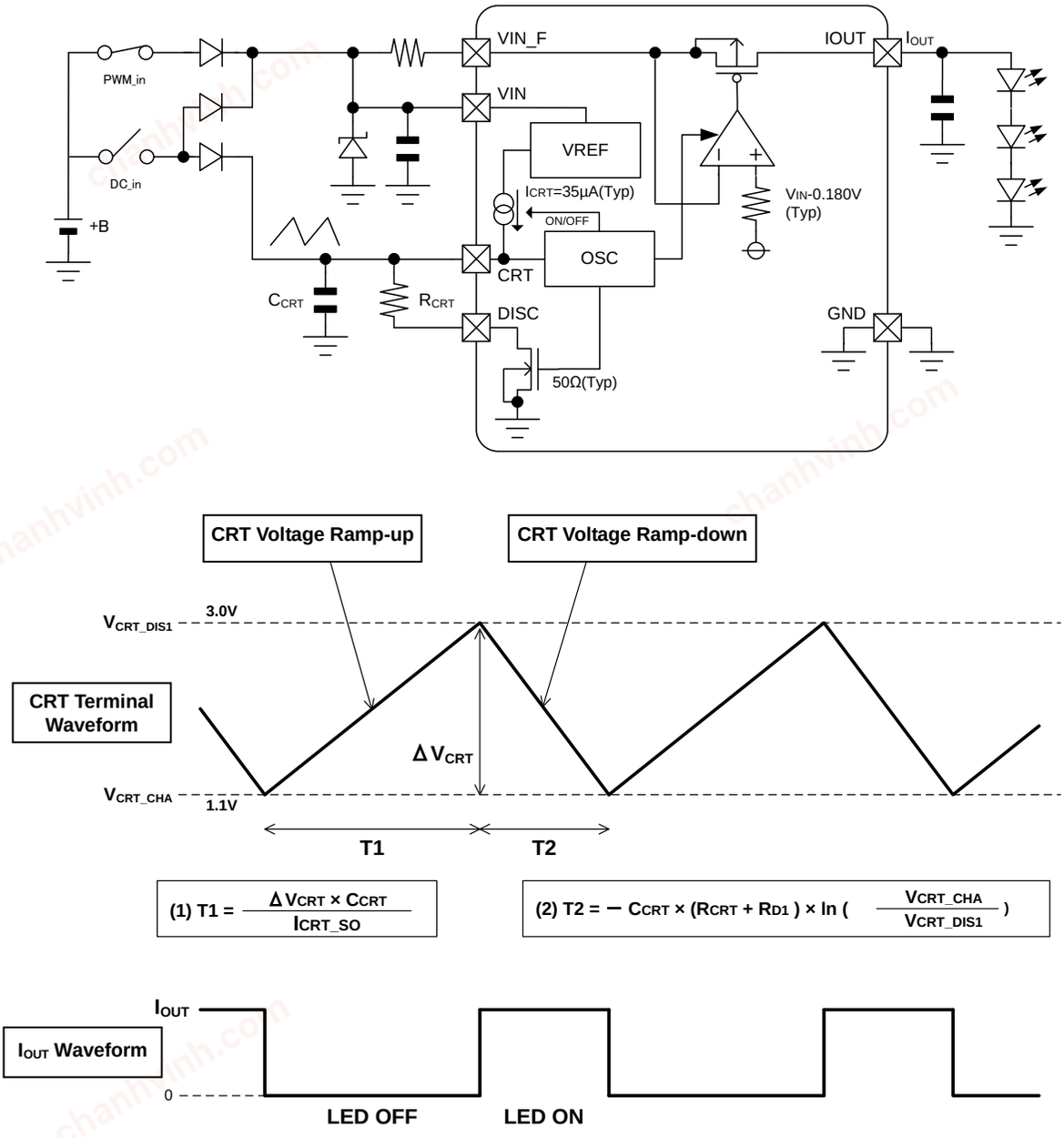

Figure 12. PWM Dimming Operation

(1) CRT Ramp up Time T1
CRT ramp up time can be obtained from the following equations:

$$T1 = \frac{\Delta V_{CRT} \times C_{CRT}}{I_{CRT_SO}} = R_{CHA} \times C_{CRT} [s]$$

where:
I_{CRT_SO} is the CRT Terminal Charge Current 35μA (Typ)
R_{CHA} is the CRT Terminal Charge Resistance 54.3kΩ(Typ)

© 2015 ROHM Co., Ltd. All rights reserved.

chanhvinh.com

(2) CRT Ramp down Time T2

CRT ramp down time is defined by discharge period due to external capacity C_{CRT} and resistance (R_{CRT} + R_{D1}).
(CRT Terminal Charge Current is OFF at CRT ramp down)
Make sure that T2 is set at not smaller than Min. pulse width 20μs(Min).

$$T2 = -C_{CRT} \times (R_{CRT} + R_{D1}) \times \ln\left(\frac{V_{CRT_CHA}}{V_{CRT_DIS1}}\right) \quad [s]$$

where:
R_{D1} is the CRT Terminal Discharge Resistance 1 50Ω (Typ)
V_{CRT_CHA} is the CRT Terminal Charge ON Voltage 1.1V (Typ)
V_{CRT_DIS1} is the CRT Terminal Discharge ON Voltage 3.0V (Typ)

(3) Dimming Frequency f_{PWM}

PWM frequency is defined by T1 and T2.

$$f_{PWM} = \frac{1}{T1 + T2} \quad [Hz]$$

(4) ON Duty (D_{ON})

Like the above, PWM ON duty is defined by T1 and T2.

$$D_{ON} = \frac{T2}{T1 + T2}$$

(Ex) In case of f_{PWM} = 518Hz and 6.7% Duty (Typ),

From f_{PWM}=518Hz; T1 + T2 = 1 / f_{PWM} = 1 / 518Hz = 1931μs
From ON Duty = 6.7%; CRT ramp up time T1 is T1 = (T1 + T2) × 0.933 = 1801.6μs
External capacity C_{CRT} is;
C_{CRT} = T1 × (I_{CRT} / ΔV_{CRT}) = 1801.6μs × 35μA / 1.9V ≒ **0.033μF**

CRT ramp down time T2 is; T2 = (T1 + T2) × 0.067 = 129μs
External resistance R_{CRT} is;
R_{CRT} = −T2 / (C_{CRT} × ln(V_{CRT_CHA} / V_{CRT_DIS})) − R_{D1} = −129μsec / (0.033μF × ln(1.1 / 3.0)) – 50Ω ≒ **3.9kΩ**

In case where PWM signal is applied from external;

It is possible to directly input PWM signal from external microcomputer for Dimming.
Input PWM signal to CRT terminal. In that case, 'High' level voltage of PWM signal should be equal to or higher than V_{CRT_DIS2}(4.4V(Max)) and 'Low' level voltage of PWM signal should be equal to or less than V_{CRT_CHA}(0.99V(Min)).

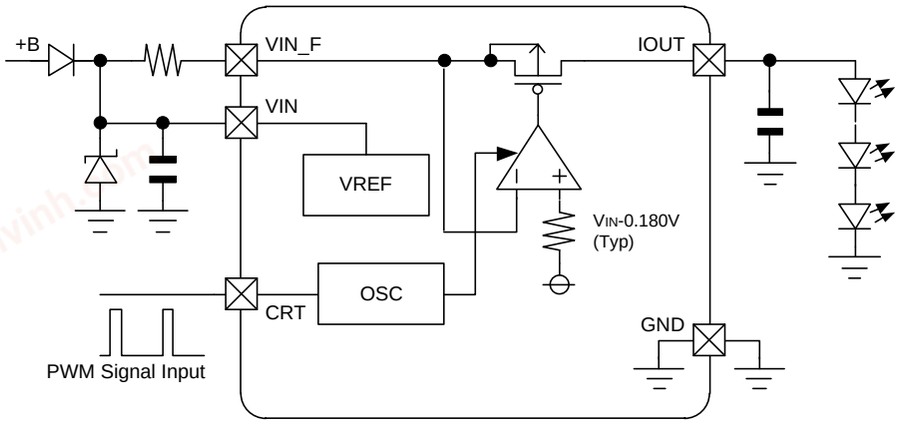

Figure 13. External Input of PWM Signal

© 2015 ROHM Co., Ltd. All rights reserved.

chanhvinh.com

4. LED Setting Range

Number of LED connections N should meet the following conditions:

$$V_{f_led} \times N \leq +B - V_{f_diode} - V_{IN_F_REF} - V_{DR_IOUT}$$

where:
+B is the Battery Voltage
V_{f_diode} is the Reverse Connection Preventing Diode Vf
$V_{IN_F_REF}$ is the VIN_F Terminal Voltage ($V_{IN} - V_{IN_F}$)
V_{DR_IOUT} is the IOUT Terminal Drop Voltage
V_{f_led} is the LED Vf
N is the Number of LED Levels

Ex) If you want to supply constant current to LED at 9V or higher Battery Voltage (+B) (Supposing that V_{f_diode} is 0.5V),

$V_{f_led} \times N \leq +B - V_{f_diode} - V_{IN_F_REF} - V_{DR_IOUT}$ = 9V –0.5V –0.189V(Max) – 1.0V(Max) = 7.311V
(Sum of Vf of LED connected to IOUT terminal is set to be 7.311V Max.)

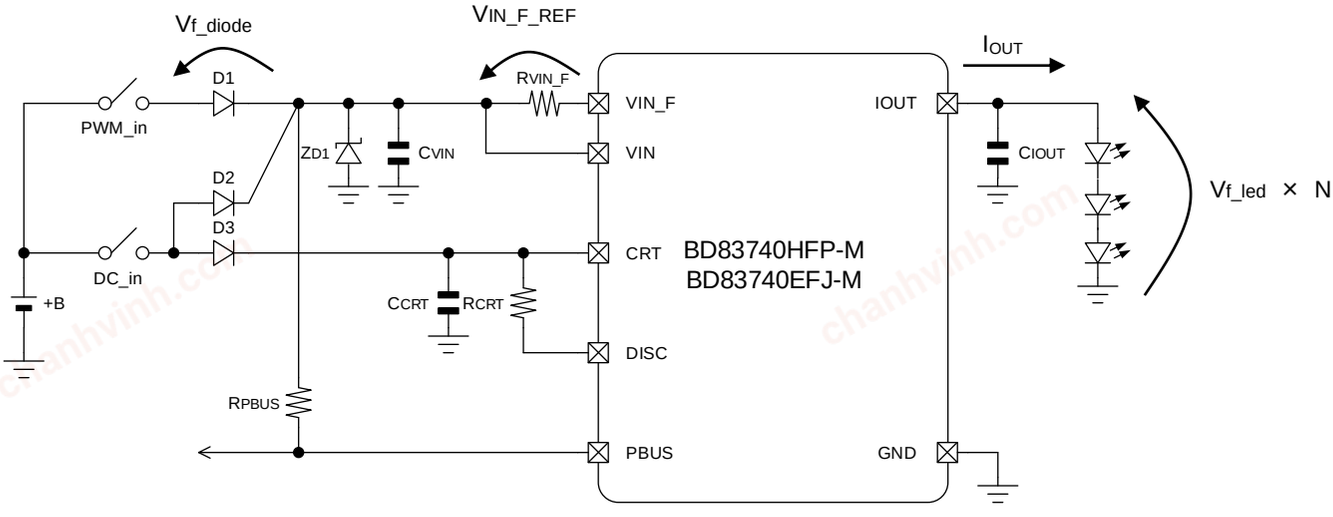

Figure 14. LED Setting Range Schematic

5. Overvoltage Mute

If 29V (Typ) ≤ V_{IN}, Overvoltage Mute is activated to restrict output current in order to suppress heat generated from IC. I_{OUT} attenuates by 3.2%/V(Typ).

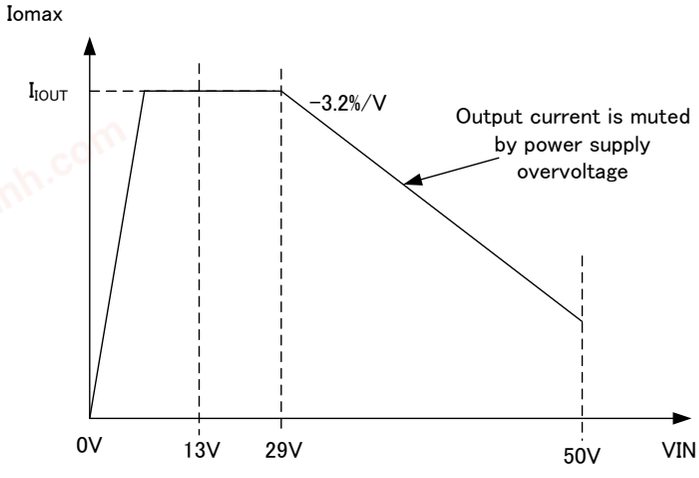

Figure 15. Overvoltage Mute Performance

© 2015 ROHM Co., Ltd. All rights reserved.

chanhvinh.com

6. Detective Function

In this IC integrated is a function for Detection from LED open, and it is possible to detect abnormal condition at PBUS terminal.

(1) LED Open Detective Function

In case where LED connected to IOUT terminal is opened, it is detected due to overvoltage of IOUT terminal.
During the detection, PBUS terminal is switched to Low to notify the trouble.

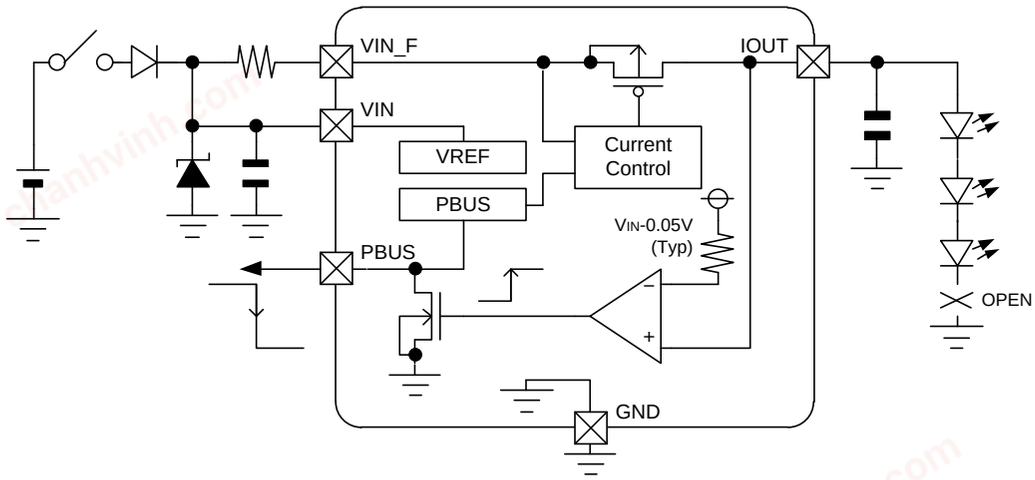

Figure 16. LED Open Detection

© 2015 ROHM Co., Ltd. All rights reserved.

chanhvinh.com

(2) About Active zone of LED Open Detective Function and IOUT Terminal Hi-Z zone

Active zone of LED Open Detective Function is different from Linear Control Mode and PWM dimming Mode.(Refer to Figure16.)

Linear Control Mode : Function is active at All zone.

PWM dimming Mode : LED Open Detective Function is active only Fall time of V_{CRT}.

(In case LED open is detected during rise time of V_{CRT}, PBUS keeps high until next lighting (output) timing. When output becomes ON, PBUS becomes low (open detect).

There is **IOUT Terminal Hi-Z zone at PWM dimming Mode**.
To prevent fluctuation of IOUT terminal voltage by noise(Note1),
It is necessary to connect Capacitor(more than 0.1μF(Note2))
between IOUT terminal and GND terminal nearby terminal
(ROHM Recommended Value : C_{IOUT}=0.1μF GCM188R11H104KA42 murata)

(Note1) Conducted noise, Radiated noise, Interference of connecter and PCB pattern etc…

(Note2) If connect more than 0.1μF, please evaluate the time of V_{IN} on to I_{IOUT} on.

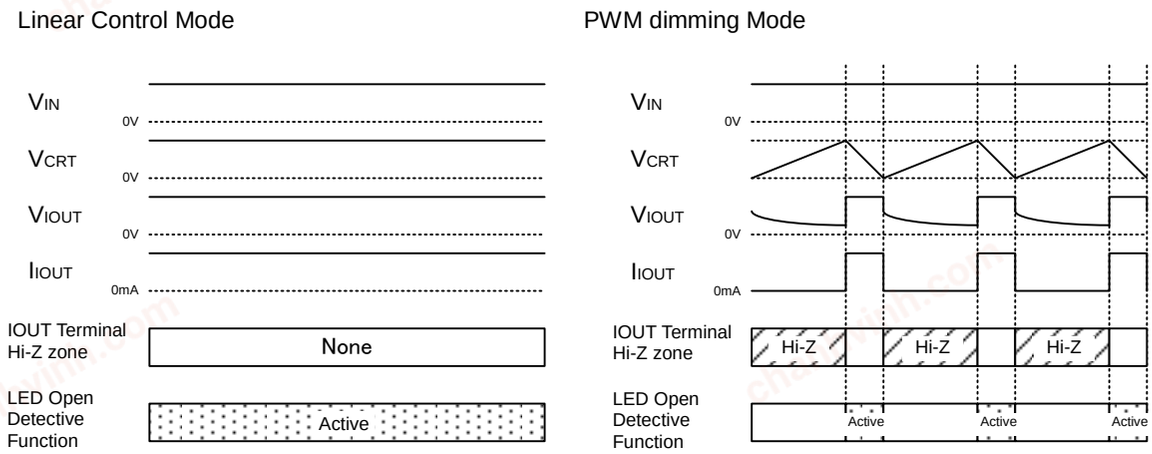

Figure 17. About Active zone of LED Open Detective Function and IOUT Terminal Hi-Z zone

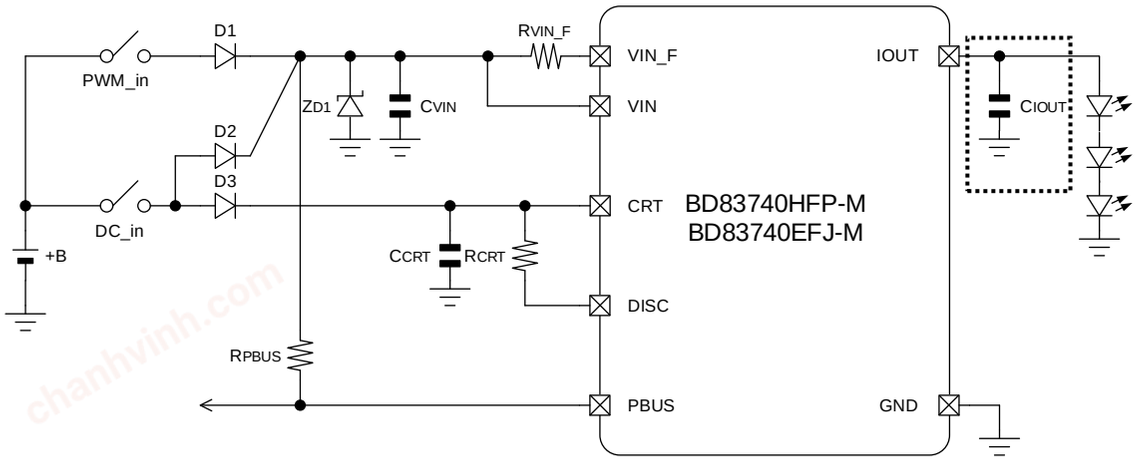

Figure 18. About the capacitor of connecting IOUT terminal

© 2015 ROHM Co., Ltd. All rights reserved.

chanhvinh.com

Evaluation example(IIOUT pulse width at PWM Dimming operation)

Condition：+B=13V
Ta=25°C
LED 3Strings
RCRT=560Ω
CCRT=0.033μF
PWM Dimming Mode

	CIOUT=0.1μF	CIOUT=0.47μF
RVIN_F=3.6Ω (IIOUT=50mA)	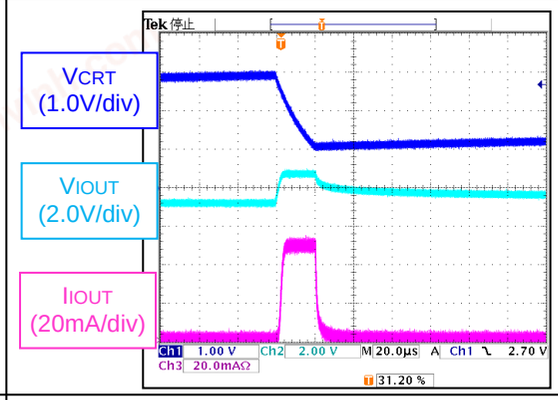	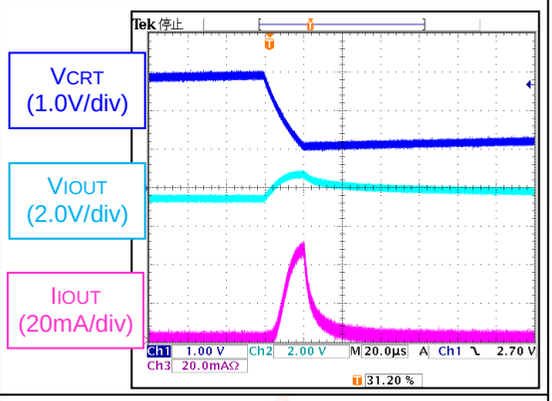
RVIN_F=0.91Ω (IIOUT=198mA)	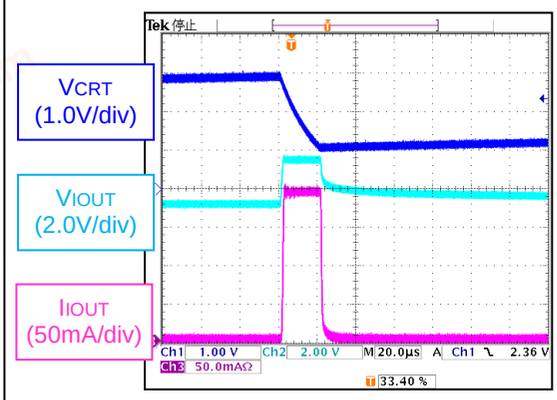	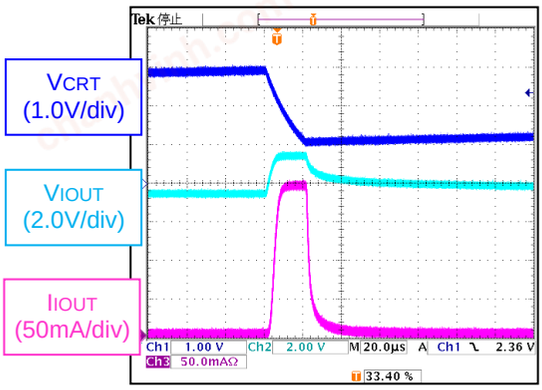

© 2015 ROHM Co., Ltd. All rights reserved.

chanhvinh.com

7. PBUS Function

PBUS terminal is an input/output terminal for outputting trouble and inputting trouble detection.
In case where a trouble occurred due to LED open, it is possible to notify the trouble outside by switching PBUS terminal output from High (Note1) to Low.
It is possible to turn OFF output current by externally controlling PBUS from High→Low.

(Note1) PBUS terminal is an open drain terminal. Even when used separately, please be pulled up(10kΩ) to power supply voltage.

In case where you use multiple number of this LSI to drive multiple LEDs, as shown in the drawing below, it is possible to turn off all rows of LEDs even if some LEDs are opened by connecting PBUS terminal of each CH.

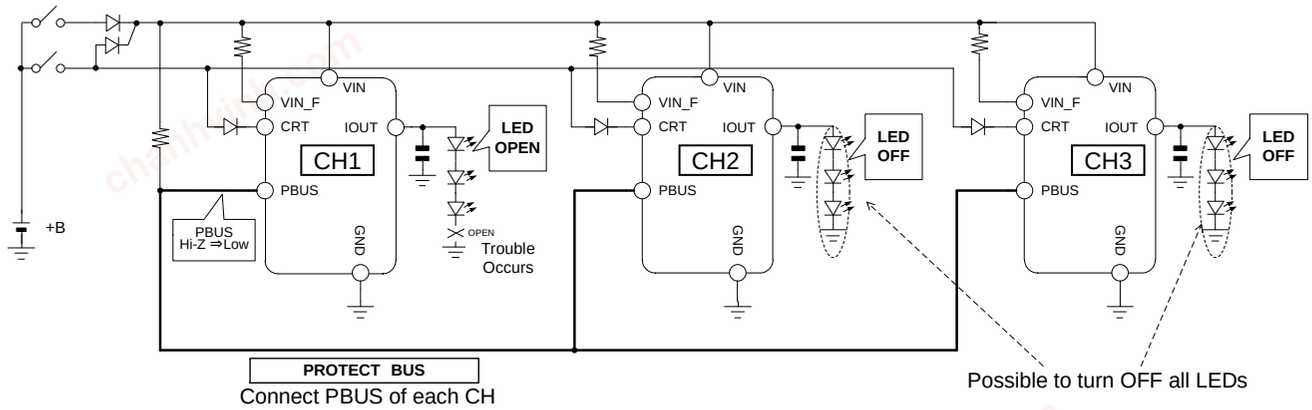

Figure 19. PBUS Function

▼Example of Protective Operation by LED Open

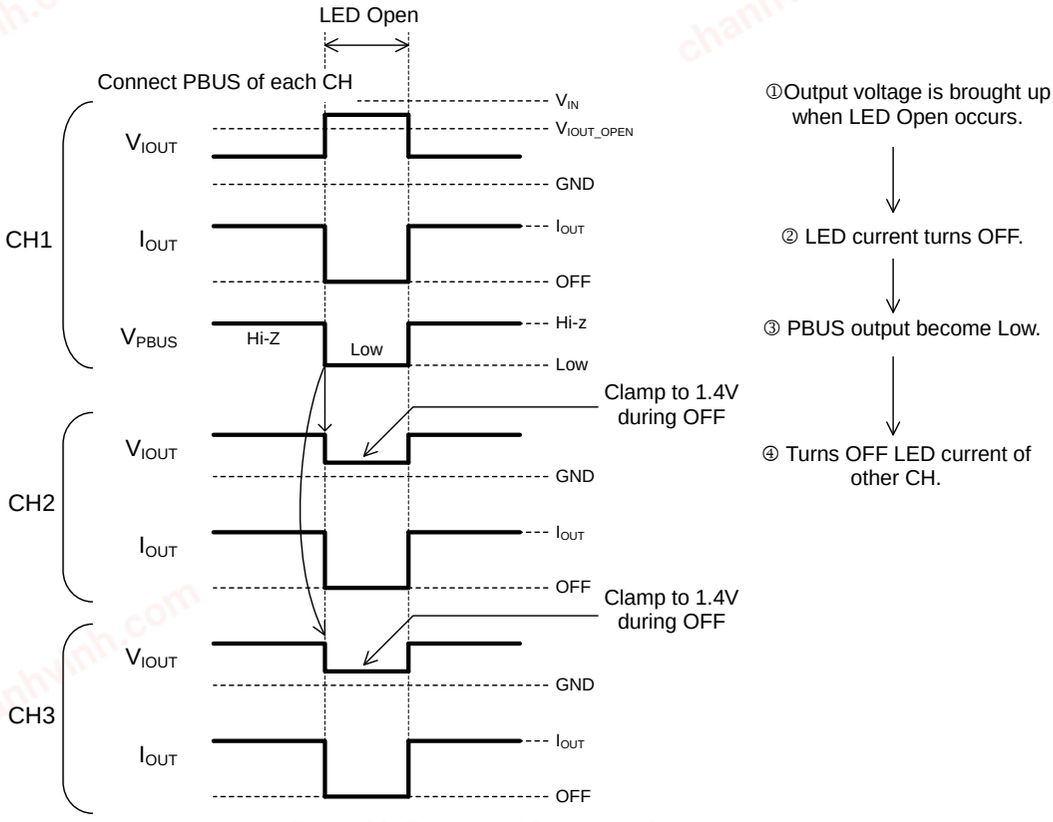

Figure 20. Example of Protective Operation

If LED OPEN occurs, PBUS of CH1 is switched from Hi-z to Low output. As PBUS becomes Low, LED drivers of other CH detect the trouble and turns OFF their own LEDs. VIOUT clamps to 1.4V (Typ) during the OFF period, in order to prohibit ground fault detection.

© 2015 ROHM Co., Ltd. All rights reserved.

chanhvinh.com

8. Caution of driving IC used multi-power supply

Each Input terminal is built- in ESD protection diodes. (Refer to I/O equivalence circuits)
If VIN terminal is not supplied voltage and Input terminal (without VIN) is supplied voltage, IC may occur malfunction(abnormal operation mode, abnormal LED lighting) due to arise VIN terminal voltage .

The Application Example of accidental operation is below.

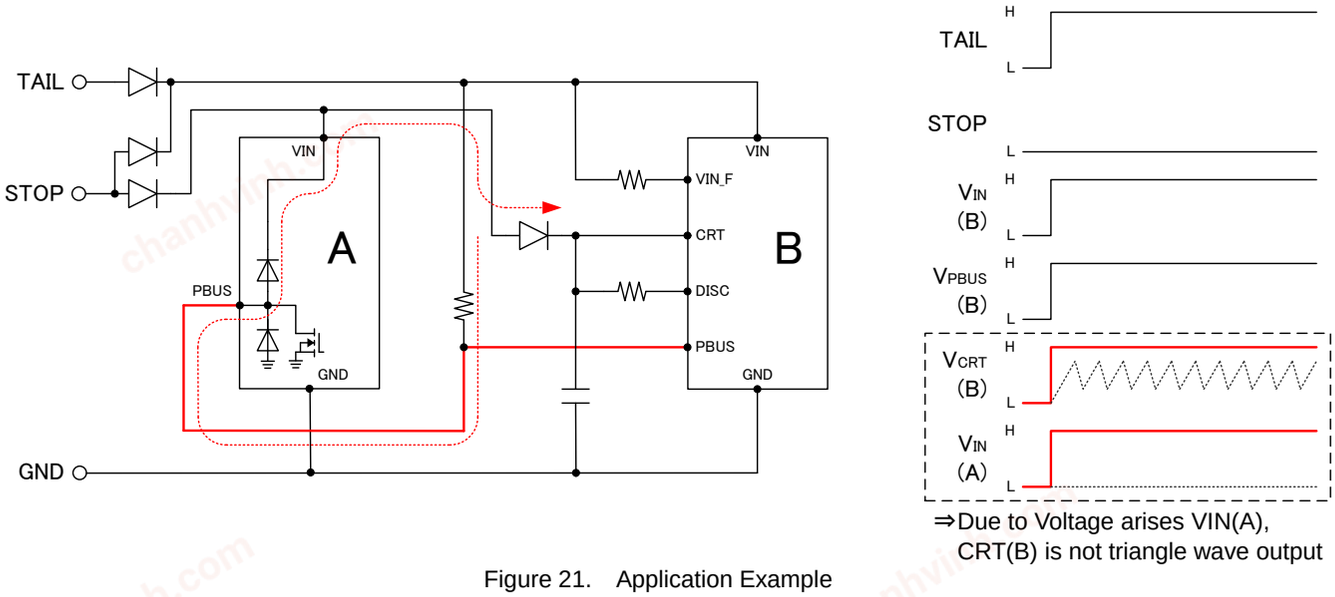

Figure 21. Application Example

(Operational Explanation)
Only input Tail : Arise VIN terminal voltage of IC A from ESD protection Diode between VIN terminal and PBUS terminal of IC A.
Due to connect VIN terminal of IC A and CRT terminal of IC B across Diode,
DC voltage inputs CRT terminal of IC B, so it is possible to operate ICB DC mode.

© 2015 ROHM Co., Ltd. All rights reserved.

chanhvinh.com

Timing Chart

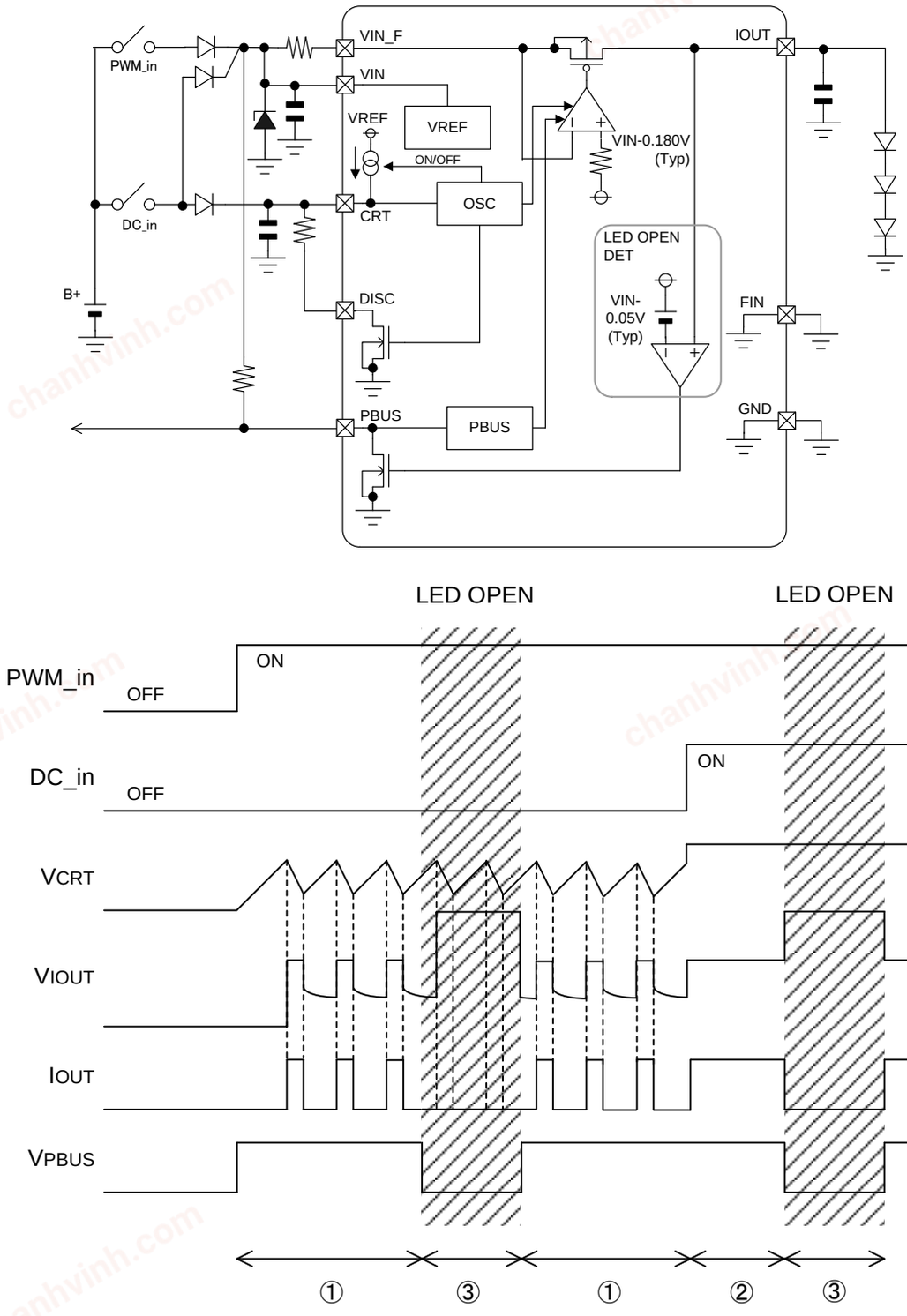

Figure 22. Timing Chart

① If PWM_in is switched ON, V_{CRT} will start oscillation, and according to its waveform LED current I_{OUT} is output. (PWM light control mode)

② If DC_in is switched ON, V_{CRT} will be fixed at High (V_{IN}-Vf). LED current I_{OUT} will be continuously output. (Linear control mode)

③ If LED becomes OPEN, LED current I_{OUT} will stop. At the same time, V_{PBUS} falls to Low.

© 2015 ROHM Co., Ltd. All rights reserved.

chanhvinh.com

Guaranteed Range of Current Accuracy and LED Open Detection Range

Guaranteed range of current accuracy and LED open detection range can be obtained from the following equation:

PBUS output becomes Low if IOUT terminal output (V_{IOUT}) is higher than the LED open detection range during power ON/OFF. Therefore, pay attention to respective setting range during power ON/OFF, and consider operating voltage range of the set.

Guaranteed Range of Current Accuracy
$V_{IN} \geq V_{f_led} \times N + V_{IN_F_REF} + V_{DR_IOUT}$ [V]

Where:
V_{IN} is the VIN Terminal Voltage
V_{f_led} is the LED Vf
N is the: Number of LED Levels
$V_{IN_F_REF}$ is the VIN_F Terminal Voltage (V_{IN} - V_{IN_F})
V_{DR_IOUT} is the IOUT Terminal Drop Voltage

LED Open Detection Voltage
$V_{IOUT} = V_{IN}$ - 50mV(Typ)

LED Open Detection Release Voltage
$V_{IOUT} = V_{IN}$ - 150mV(Typ)

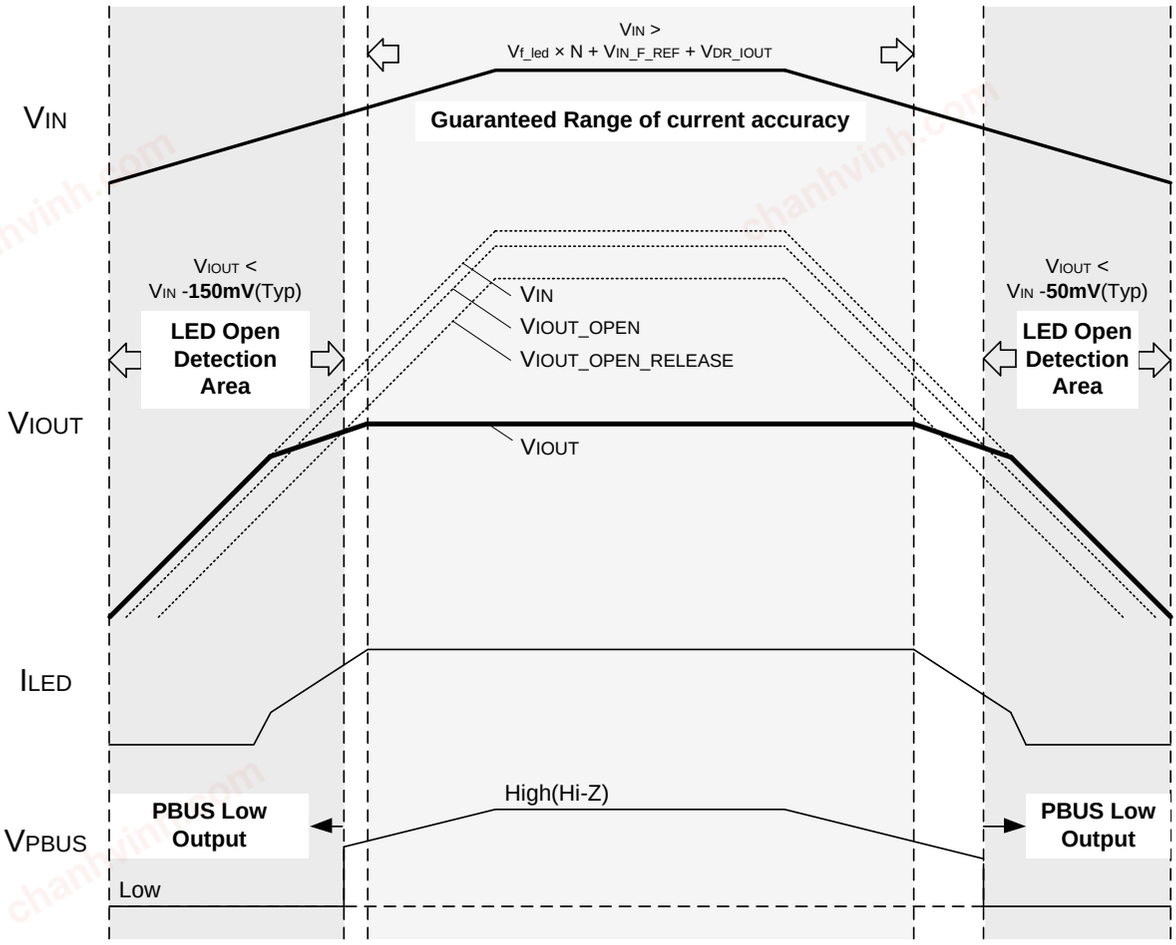

Figure 23. Guaranteed Range of Current Accuracy and LED Open Detection Range

© 2015 ROHM Co., Ltd. All rights reserved.

chanhvinh.com

How to Connect LED

In case of connected LED to IOUT terminal as shown in the following, note that protective detection becomes possible/impossible depending on connection patterns.

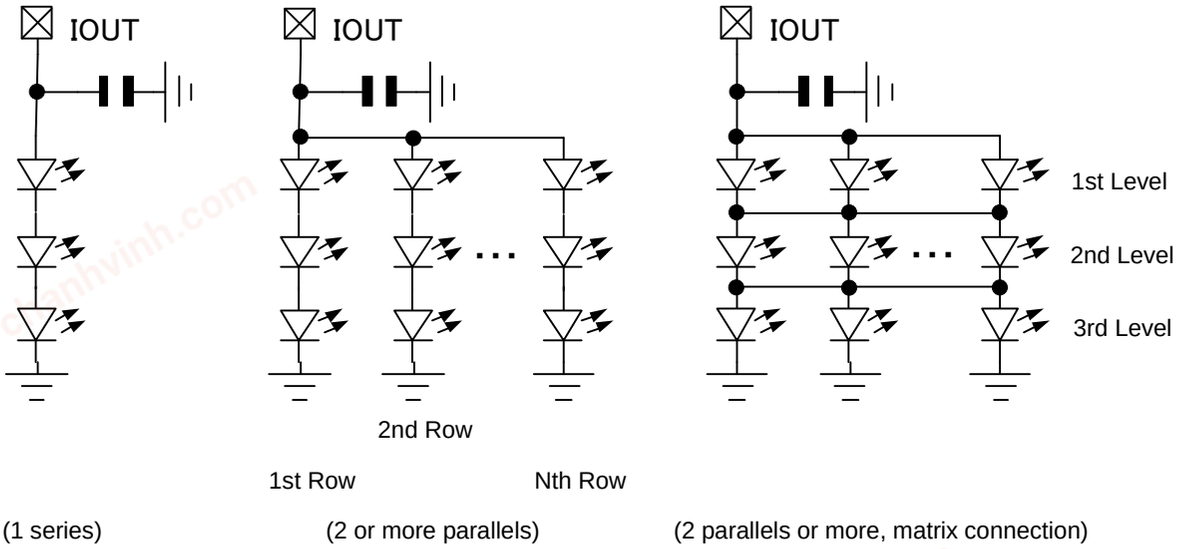

Figure 24. LED Connection Patterns

Connection Pattern	LED OPEN detection
1 Series	Detectable
2 parallels or more	Non-detectable (Note 1)
2 parallels or more (Matrix Connection)	Non-detectable (Note 2)

(Note1) : Detectable only when one or more LEDs become open in all rows.
(Note2) : Detectable only when all LEDs on the same level become open.

© 2015 ROHM Co., Ltd. All rights reserved.

chanhvinh.com

Recommended Application Circuit

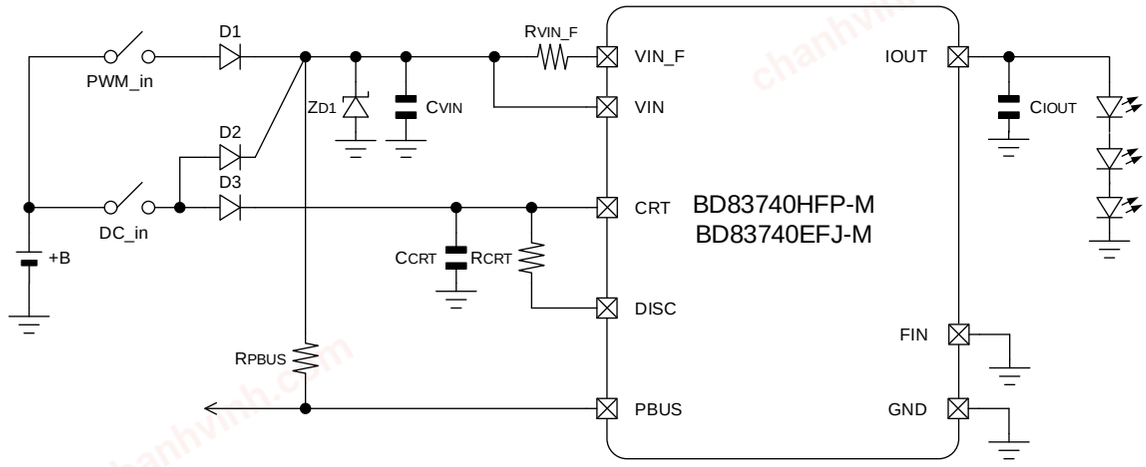

Figure 25. Recommended Application Circuit

▼Corresponding EMC Test Items

・ISO11452-2

・ISO11452-4

・ISO7637-2

(pulse1, pulse 2a,2b, pulse 3a,3b)

No.	Component Name	Component Value	Product Name	Company
1	D1	-	RFN1L6S	ROHM
2	D2	-	RFN1L6S	ROHM
3	D3	-	RFN1L6S	ROHM
4	Z_{D1}	-	TNR12H-220K	NIPPON CHEMICON
5	C_{VIN}	4.7µF	GCM32ER71H475KA40	murata
6	R_{VIN_F}	0.91Ω	MCR10 Series	ROHM
7	R_{PBUS}	10kΩ	MCR03 Series	ROHM
8	C_{CRT}	0.033µF	GCM188R11H333KA40	murata
9	R_{CRT}	3.9kΩ	MCR03 Series	ROHM
10	C_{IOUT}	0.1µF	GCM188R11H104KA42	murata

Table 1. BOM List

PWM_in	DC_in	Mode
Low	Low	OFF
High	Low	PWM Dimming Mode (Note1,Note2) (13.25mA 6.7% ON duty@518Hz)
Low	High	Linear Control Mode (Note2) (197.8mA 100% ON duty)
High	High	Linear Control Mode (Note2) (197.8mA 100% ON duty)

(Note1) See Functional Description "3. PWM Dimming Operation."
(Note2) See Functional Description "2. Table of Operations."

Table 2. Table of Operations

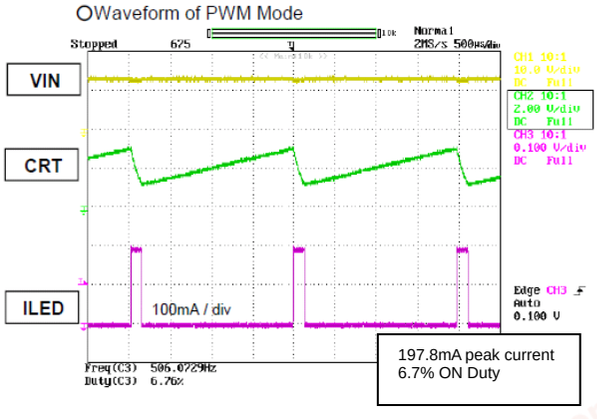

Figure 26. Example of Waveform Measurement

© 2015 ROHM Co., Ltd. All rights reserved.

chanhvinh.com

Thermal Loss

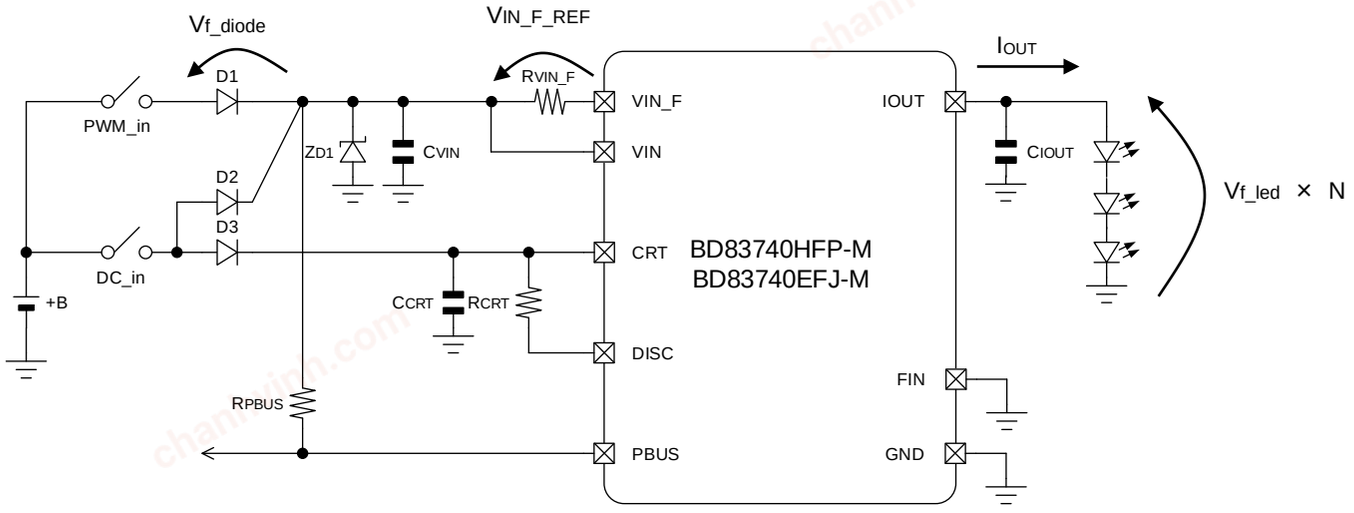

Figure 27. Application Circuit Diagram for Thermal Description

Thermal design should meet the following equation:

$Pd > Pc = (+B - V_{f_diode} - V_{IN_F_REF} - V_{f_led} \times N) \times I_{OUT} + I_{VIN} \times V_{IN}$
$Pd = (1/\theta ja) \times (Tjmax - Ta)$ or $(1/\theta jc) \times (Tjmax - Tc)$

where:
Pd is the Power Dissipation
Pc is the Power Consumption
+B is the Battery Voltage
V_{f_diode} is the Reverse Connection Preventing Diode Vf
$V_{IN_F_REF}$ is the VIN_F Terminal Voltage (V_{IN}-V_{IN_F})
V_{f_led} is the LED Vf
N is the Number of LED Levels
I_{OUT} is the Output Current
I_{VIN} is the Circuit Current
V_{IN} is the Power Supply Voltage
θja is the Thermal Resistance between Tj and Ta
θjc is the Thermal Resistance between Tj and Tc
Tjmax is the Max Joint Temperature (150°C)
Ta is the Ambient Temperature
Tc is the Case Surface Temperature

© 2015 ROHM Co., Ltd. All rights reserved.

chanhvinh.com

HRP7 Package

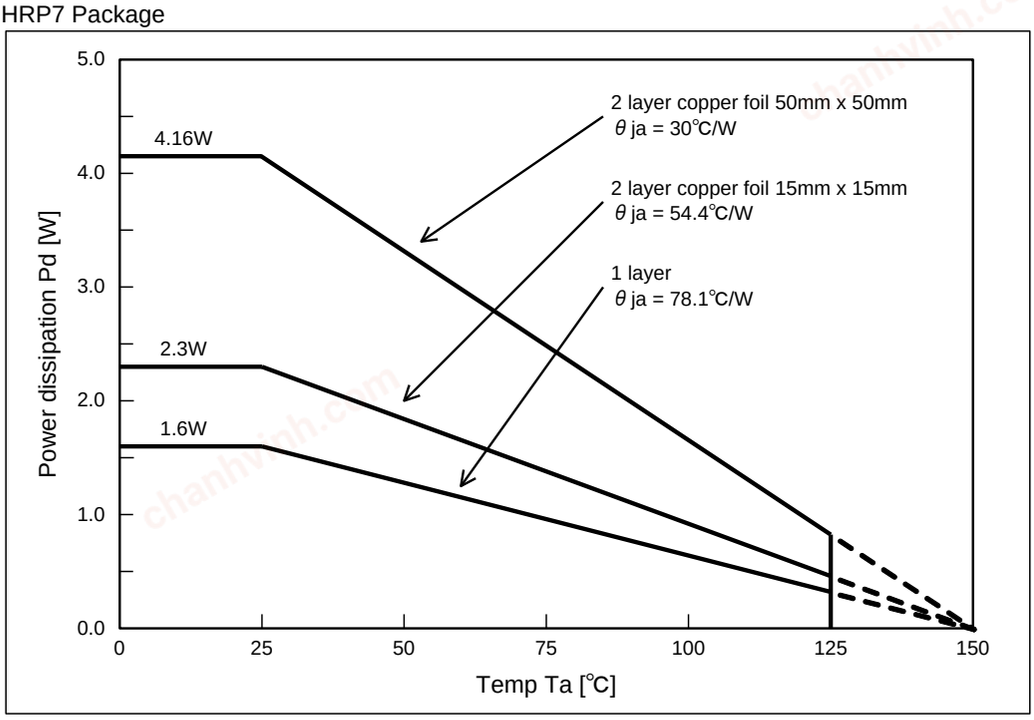

HTSOP-J8 Package

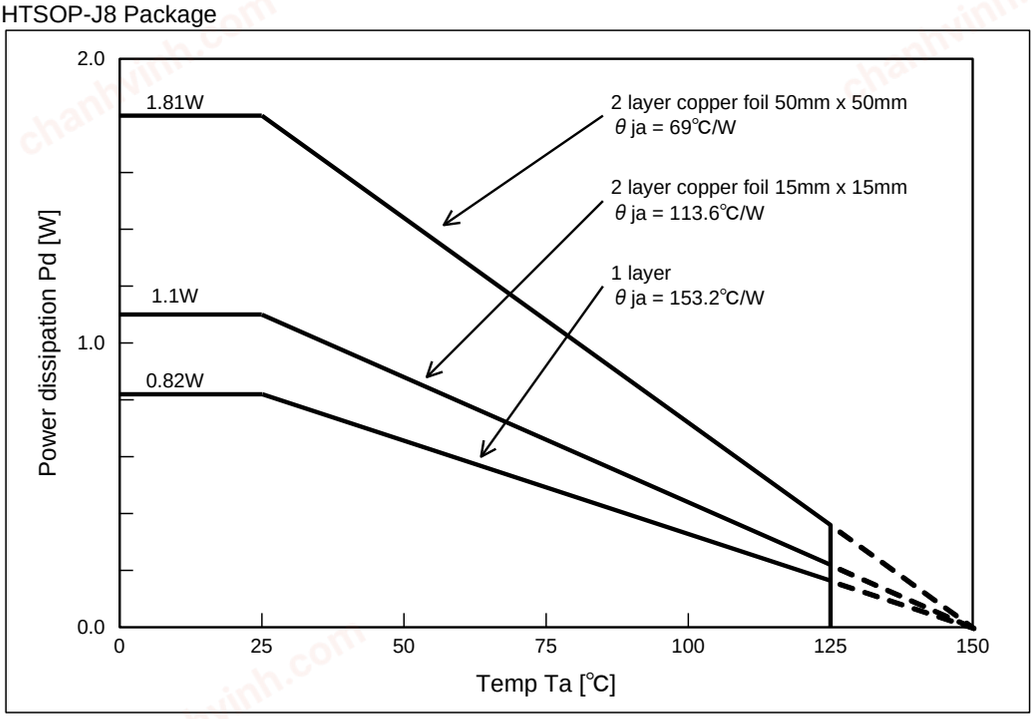

(Caution1) When mounted with 70.0mm X 70.0mm X 1.6mm glass epoxy substrate.
(Caution2) Above copper foil area indicates backside copper foil area.
(Caution3) Value changes according to number of substrate layers and copper foil area. Note that this value is a measured value, not a guaranteed value.

Figure 28. Thermal Dissipation Curve

© 2015 ROHM Co., Ltd. All rights reserved.

chanhvinh.com

Thermal Design for Few Number of LED Lamps

If there are few LED lamps, insert resistance between IOUT terminal and LED to reduce heat generation from IC and dissipate heat.
(This does not apply where amperage is low.)
In that case, note that guaranteed range of current accuracy will be as shown in the following equation:

$$+B \geq V_{f_diode} + V_{f_led} \times N + V_{IN_F_REF} + V_{DR_IOUT} + I_{OUT} \times R1$$

V_{f_diode} is the Reverse Connection Preventing Diode Vf
V_{f_led} is the LED Vf
N is the Number of LED Levels
$V_{IN_F_REF}$ is the VIN_F Terminal Voltage (V_{IN} - V_{IN_F})
V_{DR_IOUT} is the IOUT Terminal Drop Voltage
I_{OUT} is the Output Current
R1 is the Thermal Dissipation Resistance

Thermal design should meet the following equation when inserting thermal dissipation resistance:

$$Pd = (1/\theta ja) \times (Tjmax - Ta) \text{ or } (1/\theta jc) \times (Tjmax - Tc)$$
$$Pd > Pc = (+B - V_{f_diode} - V_{IN_F_REF} - V_{f_led} \times N - I_{OUT} \times R1) \times I_{OUT} + I_{VIN} \times V_{IN}$$

Pd is the Power Dissipation
Pc is the Power Consumption
+B is the Battery Voltage
V_{f_diode} is the Reverse Connection Preventing Diode Vf
$V_{IN_F_REF}$ is the VIN_F Terminal Voltage (V_{IN} - V_{IN_F})
V_{f_led} is the LED Vf
N is the Number of LED Levels
I_{OUT} is the Output Current
R1 is the Thermal Dissipation Resistance
I_{VIN} is the Circuit Current
V_{IN} is the Power Supply Voltage
θja is the Thermal Resistance between Tj and Ta
θjc is the Thermal Resistance between Tj and Tc
Tjmax is the Max Joint Temperature (150°C)
Ta is the Ambient Temperature
Tc is the Case Surface Temperature

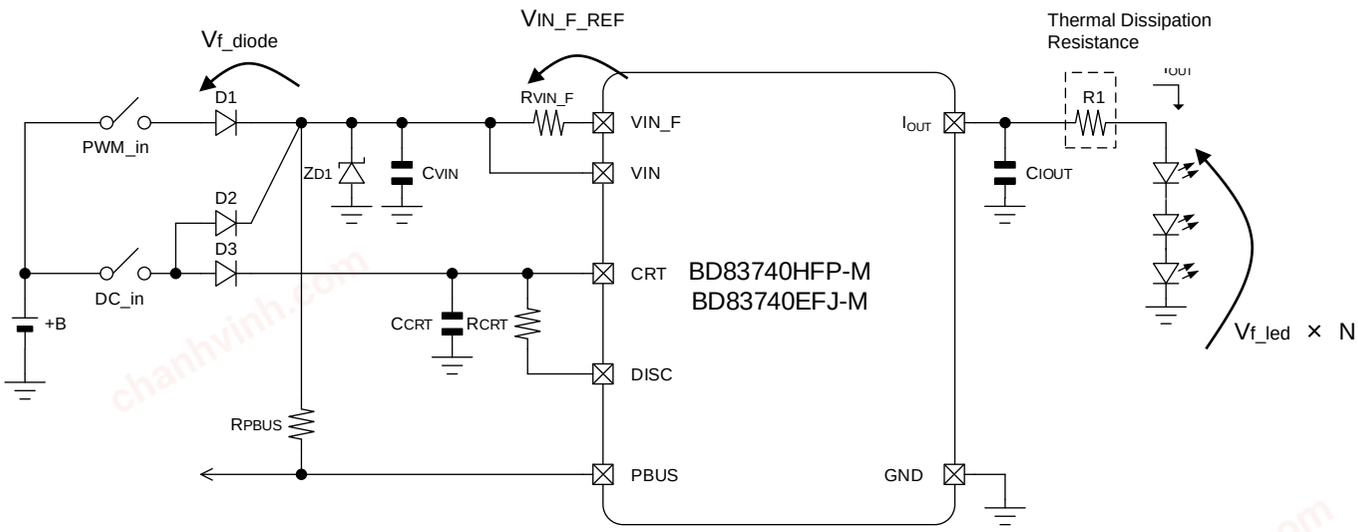

Figure 29. Example of How to Connect Thermal Dissipation Resistance

© 2015 ROHM Co., Ltd. All rights reserved.

chanhvinh.com

I/O equivalence circuits (HRP7 Package)

Number	Terminal Name	Equivalence Circuit
1	PBUS	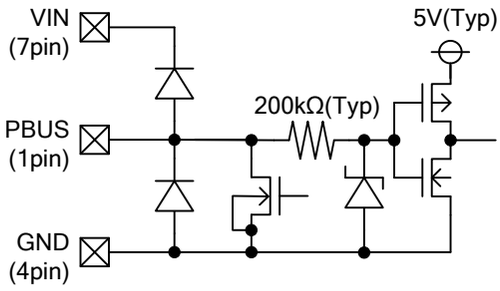
2	DISC	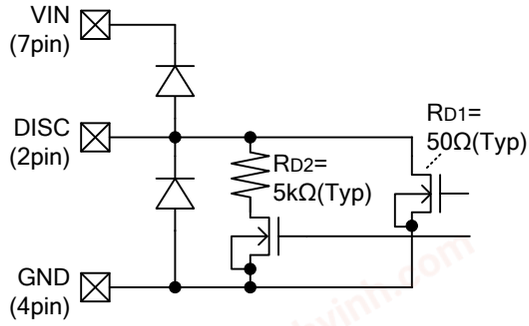
3	CRT	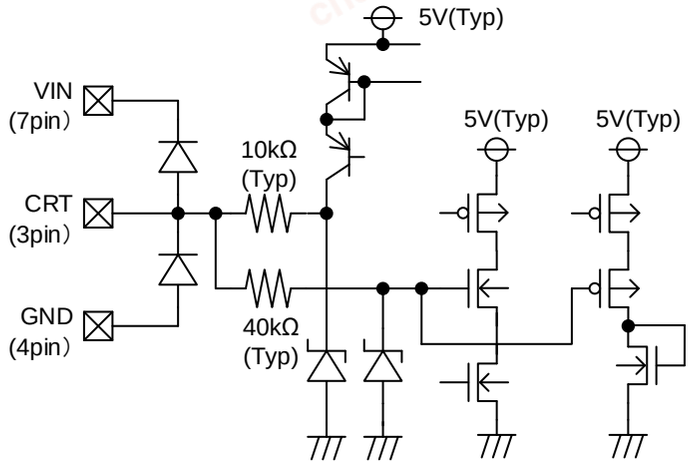
4	GND	-
5	IOUT	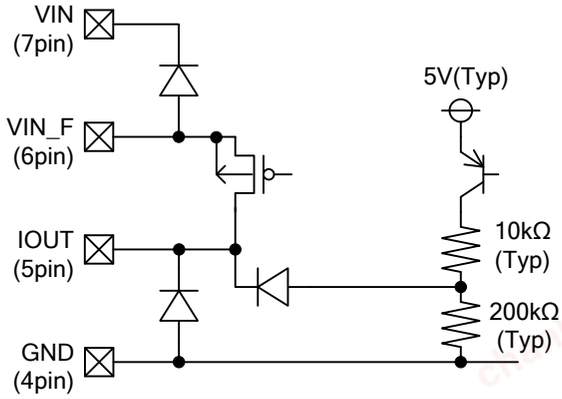
6	VIN_F	
7	VIN	-

© 2015 ROHM Co., Ltd. All rights reserved.

chanhvinh.com

Operational Notes

1. **Reverse Connection of Power Supply**
   Connecting the power supply in reverse polarity can damage the IC. Take precautions against reverse polarity when connecting the power supply, such as mounting an external diode between the power supply and the IC's power supply terminals.

2. **Power Supply Lines**
   Design the PCB layout pattern to provide low impedance supply lines. Separate the ground and supply lines of the digital and analog blocks to prevent noise in the ground and supply lines of the digital block from affecting the analog block. Furthermore, connect a capacitor to ground at all power supply pins. Consider the effect of temperature and aging on the capacitance value when using electrolytic capacitors.

3. **Ground Voltage**
   Ensure that no pins are at a voltage below that of the ground pin at any time, even during transient condition.

4. **Ground Wiring Pattern**
   When using both small-signal and large-current ground traces, the two ground traces should be routed separately but connected to a single ground at the reference point of the application board to avoid fluctuations in the small-signal ground caused by large currents. Also ensure that the ground traces of external components do not cause variations on the ground voltage. The ground lines must be as short and thick as possible to reduce line impedance.

5. **Thermal Consideration**
   Should by any chance the power dissipation rating be exceeded the rise in temperature of the chip may result in deterioration of the properties of the chip. The absolute maximum rating of the Pd stated in this specification is when the IC is mounted on a 70mm x 70mm x 1.6mm glass epoxy board. In case of exceeding this absolute maximum rating, increase the board size and copper area to prevent exceeding the Pd rating.

6. **Recommended Operating Conditions**
   These conditions represent a range within which the expected characteristics of the IC can be approximately obtained. The electrical characteristics are guaranteed under the conditions of each parameter.

7. **Rush Current**
   When power is first supplied to the IC, it is possible that the internal logic may be unstable and inrush current may flow instantaneously due to the internal powering sequence and delays, especially if the IC has more than one power supply. Therefore, give special consideration to power coupling capacitance, power wiring, width of ground wiring, and routing of connections.

8. **Operation Under Strong Electromagnetic Field**
   Operating the IC in the presence of a strong electromagnetic field may cause the IC to malfunction.

9. **Testing on Application Boards**
   When testing the IC on an application board, connecting a capacitor directly to a low-impedance output pin may subject the IC to stress. Always discharge capacitors completely after each process or step. The IC's power supply should always be turned off completely before connecting or removing it from the test setup during the inspection process. To prevent damage from static discharge, ground the IC during assembly and use similar precautions during transport and storage.

10. **Inter-pin Short and Mounting Errors**
    Ensure that the direction and position are correct when mounting the IC on the PCB. Incorrect mounting may result in damaging the IC. Avoid nearby pins being shorted to each other especially to ground, power supply and output pin. Inter-pin shorts could be due to many reasons such as metal particles, water droplets (in very humid environment) and unintentional solder bridge deposited in between pins during assembly to name a few.

© 2015 ROHM Co., Ltd. All rights reserved.

chanhvinh.com

Operational Notes – continued

11. Unused Input Terminals

Input terminals of an IC are often connected to the gate of a MOS transistor. The gate has extremely high impedance and extremely low capacitance. If left unconnected, the electric field from the outside can easily charge it. The small charge acquired in this way is enough to produce a significant effect on the conduction through the transistor and cause unexpected operation of the IC. So unless otherwise specified, unused input terminals should be connected to the power supply or ground line.

12. Regarding the Input Pin of the IC

This monolithic IC contains P+ isolation and P substrate layers between adjacent elements in order to keep them isolated. P-N junctions are formed at the intersection of the P layers with the N layers of other elements, creating a parasitic diode or transistor. For example (refer to figure below):

When GND > Pin A and GND > Pin B, the P-N junction operates as a parasitic diode.
When GND > Pin B, the P-N junction operates as a parasitic transistor.

Parasitic diodes inevitably occur in the structure of the IC. The operation of parasitic diodes can result in mutual interference among circuits, operational faults, or physical damage. Therefore, conditions that cause these diodes to operate, such as applying a voltage lower than the GND voltage to an input pin (and thus to the P substrate) should be avoided.

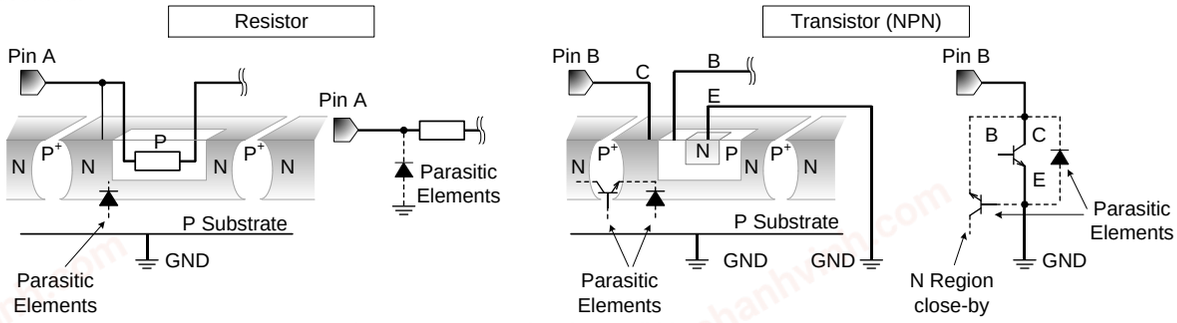

Figure 30. Example of monolithic IC structure

13. Ceramic Capacitor

When using a ceramic capacitor, determine the dielectric constant considering the change of capacitance with temperature and the decrease in nominal capacitance due to DC bias and others.

14. Area of Safe Operation (ASO)

Operate the IC such that the output voltage, output current, and power dissipation are all within the Area of Safe Operation (ASO).

15. Thermal Shutdown Circuit(TSD)

This IC has a built-in thermal shutdown circuit that prevents heat damage to the IC. Normal operation should always be within the IC's power dissipation rating. If however the rating is exceeded for a continued period, the junction temperature (Tj) will rise which will activate the TSD circuit that will turn OFF all output pins. When the Tj falls below the TSD threshold, the circuits are automatically restored to normal operation.
Note that the TSD circuit operates in a situation that exceeds the absolute maximum ratings and therefore, under no circumstances, should the TSD circuit be used in a set design or for any purpose other than protecting the IC from heat damage.

© 2015 ROHM Co., Ltd. All rights reserved.

chanhvinh.com

Ordering Information

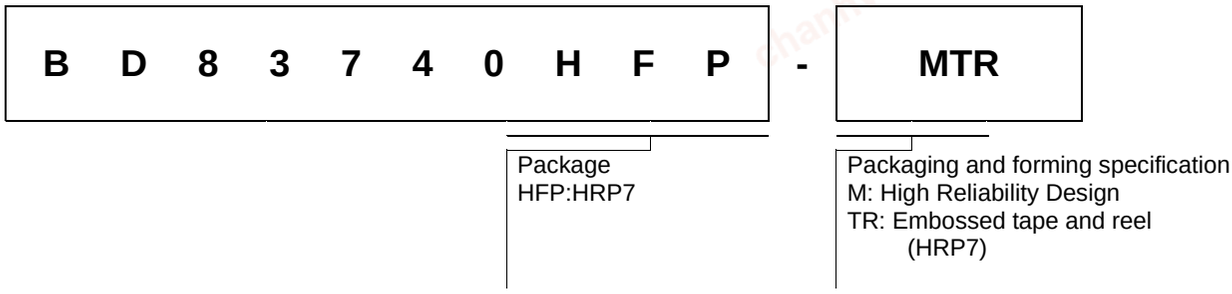

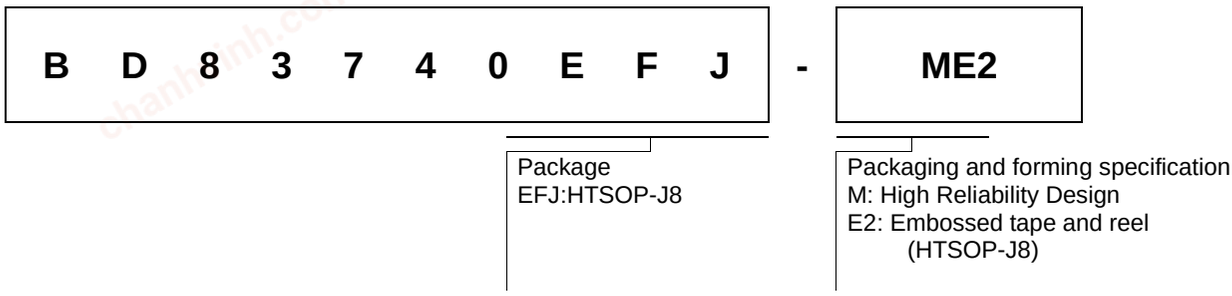

Marking Diagrams

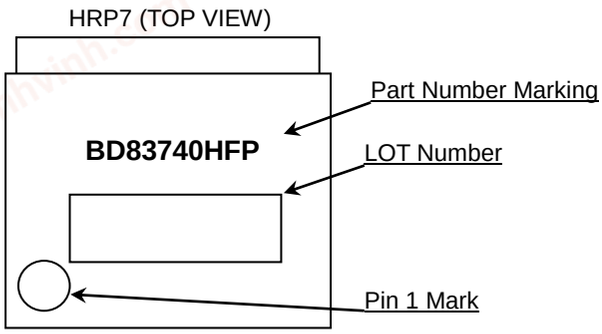

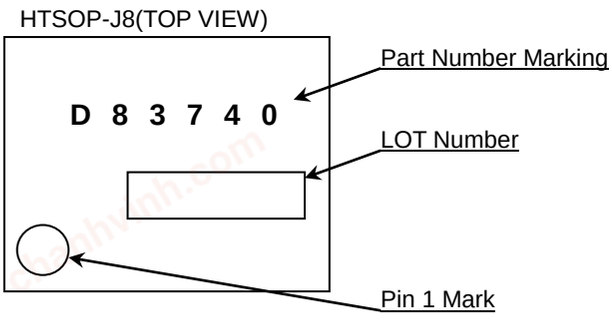

© 2015 ROHM Co., Ltd. All rights reserved.

chanhvinh.com

Physical Dimension, Tape and Reel Information(BD83740HFP-M)

Package Name	HRP7

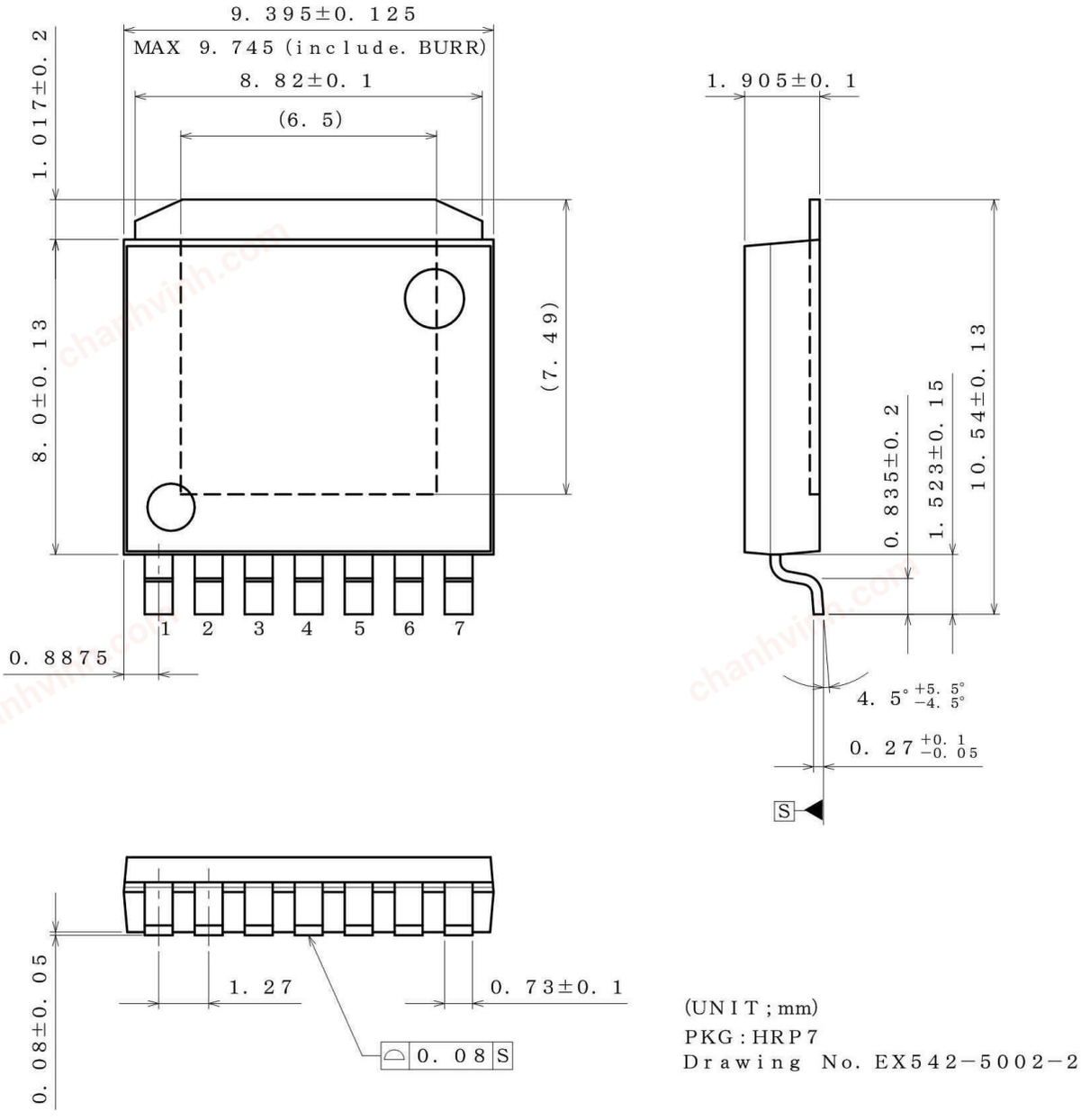

< Tape and Reel Information >

Tape	Embossed carrier tape
Quantity	2000pcs
Direction of feed	TR The direction is the pin 1 of product is at the upper right when you hold reel on the left hand and you pull out the tape on the right hand

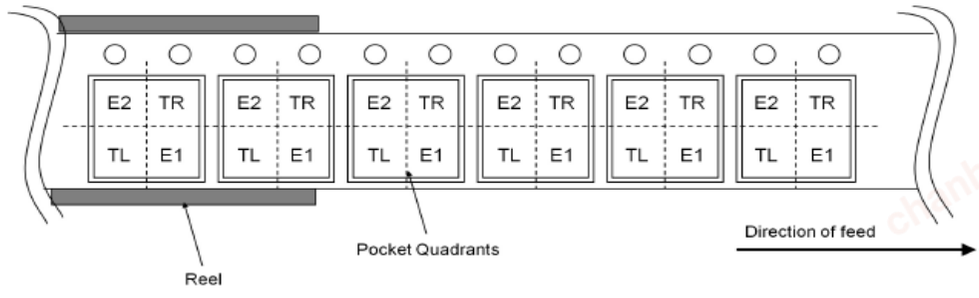

© 2015 ROHM Co., Ltd. All rights reserved.

chanhvinh.com

Physical Dimension, Tape and Reel Information(BD83740EFJ-M)

Package Name	HTSOP-J8

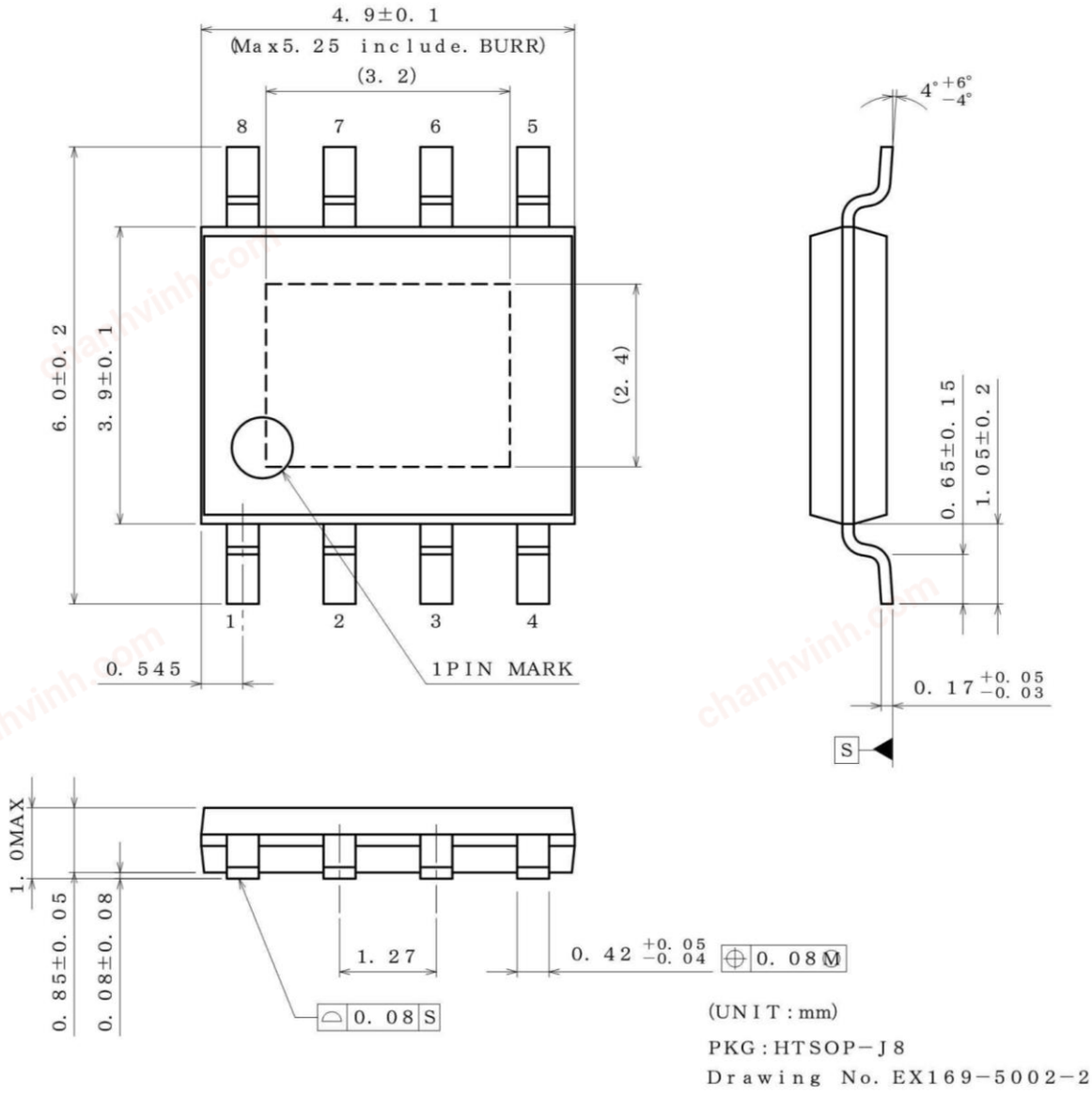

<Tape and Reel information>

Tape	Embossed carrier tape
Quantity	2500pcs
Direction of feed	E2 (The direction is the 1pin of product is at the upper left when you hold reel on the left hand and you pull out the tape on the right hand)

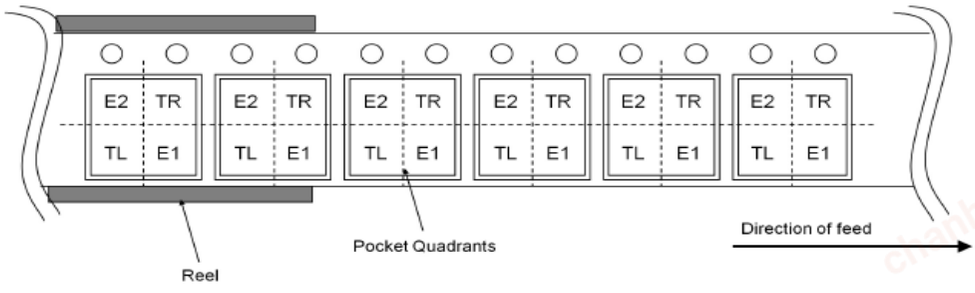

© 2015 ROHM Co., Ltd. All rights reserved.

chanhvinh.com

Revision History

Date	Revision	Changes
25.Feb.2015	001	New Release
06.Sep.2016	002	Page 8 PWM Dimming Operation Figure11 Line4 CRT -> DC_in Page 9 Line19 1800.7μs -> 801.6μs Line23 −129μsec / 0.033μF × ln(1.1 / 3.0) – 50Ω ->−129μsec / (0.033μF × ln(1.1 / 3.0)) – 50Ω Page 16 Figure21 revise Page 19 D1,D2,D3 Product Name RF201L2S -> RFN1L6S Page 22 Line16 Pd > Pc = (+B – V_{f_diode} - $V_{IN_F_REF}$ – V_{f_led} × N – I_{OUT} × R1)×I_{OUT} + I_{VIN} × V_{IN} Add Page 23 I/O equivalence circuits CRT revise
27.Apr.2018	003	Add data of BD83740EFJ-M

© 2015 ROHM Co., Ltd. All rights reserved.

chanhvinh.com

Notice

Precaution on using ROHM Products

1. If you intend to use our Products in devices requiring extremely high reliability (such as medical equipment (Note 1), aircraft/spacecraft, nuclear power controllers, etc.) and whose malfunction or failure may cause loss of human life, bodily injury or serious damage to property ("Specific Applications"), please consult with the ROHM sales representative in advance. Unless otherwise agreed in writing by ROHM in advance, ROHM shall not be in any way responsible or liable for any damages, expenses or losses incurred by you or third parties arising from the use of any ROHM's Products for Specific Applications.

(Note1) Medical Equipment Classification of the Specific Applications

JAPAN	USA	EU	CHINA
CLASSⅢ	CLASSⅢ	CLASSⅡb	CLASSⅢ
CLASSⅣ		CLASSⅢ	

2. ROHM designs and manufactures its Products subject to strict quality control system. However, semiconductor products can fail or malfunction at a certain rate. Please be sure to implement, at your own responsibilities, adequate safety measures including but not limited to fail-safe design against the physical injury, damage to any property, which a failure or malfunction of our Products may cause. The following are examples of safety measures:
   [a] Installation of protection circuits or other protective devices to improve system safety
   [b] Installation of redundant circuits to reduce the impact of single or multiple circuit failure

3. Our Products are not designed under any special or extraordinary environments or conditions, as exemplified below. Accordingly, ROHM shall not be in any way responsible or liable for any damages, expenses or losses arising from the use of any ROHM's Products under any special or extraordinary environments or conditions. If you intend to use our Products under any special or extraordinary environments or conditions (as exemplified below), your independent verification and confirmation of product performance, reliability, etc, prior to use, must be necessary:
   [a] Use of our Products in any types of liquid, including water, oils, chemicals, and organic solvents
   [b] Use of our Products outdoors or in places where the Products are exposed to direct sunlight or dust
   [c] Use of our Products in places where the Products are exposed to sea wind or corrosive gases, including Cl_2, H_2S, NH_3, SO_2, and NO_2
   [d] Use of our Products in places where the Products are exposed to static electricity or electromagnetic waves
   [e] Use of our Products in proximity to heat-producing components, plastic cords, or other flammable items
   [f] Sealing or coating our Products with resin or other coating materials
   [g] Use of our Products without cleaning residue of flux (even if you use no-clean type fluxes, cleaning residue of flux is recommended); or Washing our Products by using water or water-soluble cleaning agents for cleaning residue after soldering
   [h] Use of the Products in places subject to dew condensation

4. The Products are not subject to radiation-proof design.

5. Please verify and confirm characteristics of the final or mounted products in using the Products.

6. In particular, if a transient load (a large amount of load applied in a short period of time, such as pulse. is applied, confirmation of performance characteristics after on-board mounting is strongly recommended. Avoid applying power exceeding normal rated power; exceeding the power rating under steady-state loading condition may negatively affect product performance and reliability.

7. De-rate Power Dissipation depending on ambient temperature. When used in sealed area, confirm that it is the use in the range that does not exceed the maximum junction temperature.

8. Confirm that operation temperature is within the specified range described in the product specification.

9. ROHM shall not be in any way responsible or liable for failure induced under deviant condition from what is defined in this document.

Precaution for Mounting / Circuit board design

1. When a highly active halogenous (chlorine, bromine, etc.) flux is used, the residue of flux may negatively affect product performance and reliability.

2. In principle, the reflow soldering method must be used on a surface-mount products, the flow soldering method must be used on a through hole mount products. If the flow soldering method is preferred on a surface-mount products, please consult with the ROHM representative in advance.

For details, please refer to ROHM Mounting specification

© 2015 ROHM Co., Ltd. All rights reserved.

chanhvinh.com

Precautions Regarding Application Examples and External Circuits

1. If change is made to the constant of an external circuit, please allow a sufficient margin considering variations of the characteristics of the Products and external components, including transient characteristics, as well as static characteristics.

2. You agree that application notes, reference designs, and associated data and information contained in this document are presented only as guidance for Products use. Therefore, in case you use such information, you are solely responsible for it and you must exercise your own independent verification and judgment in the use of such information contained in this document. ROHM shall not be in any way responsible or liable for any damages, expenses or losses incurred by you or third parties arising from the use of such information.

Precaution for Electrostatic

This Product is electrostatic sensitive product, which may be damaged due to electrostatic discharge. Please take proper caution in your manufacturing process and storage so that voltage exceeding the Products maximum rating will not be applied to Products. Please take special care under dry condition (e.g. Grounding of human body / equipment / solder iron, isolation from charged objects, setting of Ionizer, friction prevention and temperature / humidity control).

Precaution for Storage / Transportation

1. Product performance and soldered connections may deteriorate if the Products are stored in the places where:
   - [a] the Products are exposed to sea winds or corrosive gases, including Cl2, H2S, NH3, SO2, and NO2
   - [b] the temperature or humidity exceeds those recommended by ROHM
   - [c] the Products are exposed to direct sunshine or condensation
   - [d] the Products are exposed to high Electrostatic

2. Even under ROHM recommended storage condition, solderability of products out of recommended storage time period may be degraded. It is strongly recommended to confirm solderability before using Products of which storage time is exceeding the recommended storage time period.

3. Store / transport cartons in the correct direction, which is indicated on a carton with a symbol. Otherwise bent leads may occur due to excessive stress applied when dropping of a carton.

4. Use Products within the specified time after opening a humidity barrier bag. Baking is required before using Products of which storage time is exceeding the recommended storage time period.

Precaution for Product Label

A two-dimensional barcode printed on ROHM Products label is for ROHM's internal use only.

Precaution for Disposition

When disposing Products please dispose them properly using an authorized industry waste company.

Precaution for Foreign Exchange and Foreign Trade act

Since concerned goods might be fallen under listed items of export control prescribed by Foreign exchange and Foreign trade act, please consult with ROHM in case of export.

Precaution Regarding Intellectual Property Rights

1. All information and data including but not limited to application example contained in this document is for reference only. ROHM does not warrant that foregoing information or data will not infringe any intellectual property rights or any other rights of any third party regarding such information or data.

2. ROHM shall not have any obligations where the claims, actions or demands arising from the combination of the Products with other articles such as components, circuits, systems or external equipment (including software).

3. No license, expressly or implied, is granted hereby under any intellectual property rights or other rights of ROHM or any third parties with respect to the Products or the information contained in this document. Provided, however, that ROHM will not assert its intellectual property rights or other rights against you or your customers to the extent necessary to manufacture or sell products containing the Products, subject to the terms and conditions herein.

Other Precaution

1. This document may not be reprinted or reproduced, in whole or in part, without prior written consent of ROHM.

2. The Products may not be disassembled, converted, modified, reproduced or otherwise changed without prior written consent of ROHM.

3. In no event shall you use in any way whatsoever the Products and the related technical information contained in the Products or this document for any military purposes, including but not limited to, the development of mass-destruction weapons.

4. The proper names of companies or products described in this document are trademarks or registered trademarks of ROHM, its affiliated companies or third parties.

© 2015 ROHM Co., Ltd. All rights reserved.

chanhvinh.com

General Precaution

1. Before you use our Products, you are requested to carefully read this document and fully understand its contents. ROHM shall not be in any way responsible or liable for failure, malfunction or accident arising from the use of any ROHM's Products against warning, caution or note contained in this document.

2. All information contained in this document is current as of the issuing date and subject to change without any prior notice. Before purchasing or using ROHM's Products, please confirm the latest information with a ROHM sales representative.

3. The information contained in this document is provided on an "as is" basis and ROHM does not warrant that all information contained in this document is accurate and/or error-free. ROHM shall not be in any way responsible or liable for any damages, expenses or losses incurred by you or third parties resulting from inaccuracy or errors of or concerning such information.

© 2015 ROHM Co., Ltd. All rights reserved.