chanhvinh.com

Reversible Motor Drivers for Brush Motors

1.0A Reversible Motor Drivers (Single Motor)

BA6956AN,BA6287F,BA6285FS,BA6285AFP-Y,BA6920FP-Y

No.11008EBT02

●Description

The reversible motor driver for output 1.0A for 1 motor can set the output modes to four modes, normal, reverse, stop (idling), and braking in accordance with logic input (2 inputs).

●Features

1) Built-in surge absorption diode
2) By built-in power save circuit, current consumption when a motor stops (idles) can be suppressed
3) Output voltage can be optionally set by reference voltage setting pin
4) Built-in thermal shutdown circuit (TSD)

●Applications

Audio-visual equipment; PC peripherals; Car audios; Car navigation systems; OA equipments

●Absolute maximum ratings (Ta=25℃, All voltages are with respect to ground)

Parameter	Symbol	Ratings					Unit
		BA6956AN	BA6287F	BA6285FS	BA6285AFP-Y	BA6920FP-Y	
Supply voltage	VCC	18	18	18	30	36	V
Supply voltage	VM	18	18	18	30	36	V
Output current	I_{OMAX}	1*[1]	1*[1]	1*[1]	1*[1]	1*[1]	A
Operating temperature	T_{OPR}	-20 ~ 75	-20 ~ 75	-20 ~ 75	-40 ~ 85	-30 ~ 85	℃
Storage temperature	T_{STG}	-55 ~ 150	-55 ~ 150	-55 ~ 150	-55 ~ 150	-55 ~ 150	℃
Power dissipation	Pd	1.19*[2]	0.689*[3]	0.813*[4]	1.45*[5]	1.45*[5]	W
Junction temperature	T_{jmax}	150	150	150	150	150	℃

*1 Do not, exceed Pd or ASO.
*2 SIP9 package. Derated at 9.5mW/℃ above 25℃.
*3 SOP8 package. Mounted on a 70mm x 70mm x 1.6mm FR4 glass-epoxy board with less than 3% copper foil. Derated at 5.52mW/℃ above 25℃.
*4 SSOP-A16 package. Mounted on a 70mm x 70mm x 1.6mm FR4 glass-epoxy board with less than 3% copper foil. Derated at 6.5mW/℃ above 25℃.
*5 HSOP25 package. Mounted on a 70mm x 70mm x 1.6mm FR4 glass-epoxy board with less than 3% copper foil. Derated at 11.6mW/℃ above 25℃.

●Operating conditions (Ta=25℃)

Parameter	Symbol	Ratings					Unit
		BA6956AN	BA6287F	BA6285FS	BA6285AFP-Y	BA6920FP-Y	
Supply voltage	VCC	6.5 ~ 15	4.5 ~ 15	4.5 ~ 15	4.5 ~ 24	6.5 ~ 34	V
Supply voltage	VM	6.5 ~ 15	4.5 ~ 15	4.5 ~ 15	4.5 ~ 24	6.5 ~ 34	V
VREF voltage	VREF	< VCC, VM	< VCC, VM	< VCC, VM	< VCC, VM	< VCC, VM	V

© 2011 ROHM Co., Ltd. All rights reserved.

chanhvinh.com

●**Electrical characteristics** (BA6956AN, unless otherwise specified, Ta=25℃ and VCC=9V, VM=9V)

Parameter	Symbol	Limits			Unit	Conditions
		Min.	Typ.	Max.		
Supply current 1	I_{CC1}	-	29	44	mA	FWD/REV mode
Supply current 2	I_{CC2}	-	56	80	mA	Brake mode
Supply current 3	I_{CC3}	-	0	15	μA	Standby mode
Input threshold voltage H	V_{IH}	2.0	-	VCC	V	
Input threshold voltage L	V_{IL}	0	-	0.8	V	
Input bias current	I_{IH}	50	90	131	μA	V_{IN}=2V
Output saturation voltage	V_{CE}	-	1.7	2.3	V	I_O=0.2A, vertically total
VREF bias current	I_{REF}	-	10	25	μA	I_O=0.2A, VREF=6V

●**Electrical characteristics** (BA6287F, unless otherwise specified, Ta=25℃ and VCC=9V, VM=9V, VREF=9V)

Parameter	Symbol	Limits			Unit	Conditions
		Min.	Typ.	Max.		
Supply current 1	I_{CC1}	12	24	36	mA	FWD/REV mode
Supply current 2	I_{CC2}	29	48	67	mA	Brake mode
Standby current	I_{ST}	-	0	15	μA	Standby mode
Input threshold voltage H	V_{IH}	2.0	-	VCC	V	
Input threshold voltage L	V_{IL}	0	-	0.8	V	
Input bias current	I_{IH}	45	90	135	μA	V_{IN}=2V
Output saturation voltage	V_{CE}	-	1.0	1.5	V	I_O=0.2A, vertically total
VREF bias current	I_{REF}	6	12	18	mA	I_O=0.2A, FWD or REV mode

●**Electrical characteristics** (BA6285FS, unless otherwise specified, Ta=25℃ and VCC=9V, VM=9V, VREF=9V)

Parameter	Symbol	Limits			Unit	Conditions
		Min.	Typ.	Max.		
Supply current 1	I_{CC1}	12	24	36	mA	FWD/REV mode
Supply current 2	I_{CC2}	29	48	67	mA	Brake mode
Standby current	I_{ST}	-	0	15	μA	Standby mode
Input threshold voltage H	V_{IH}	2.0	-	VCC	V	
Input threshold voltage L	V_{IL}	0	-	0.8	V	
Input bias current	I_{IH}	45	90	135	μA	V_{IN}=2V
Power save on voltage	V_{PSON}	2.0	-	VCC	V	Standby mode
Power save off voltage	V_{PSOFF}	0	-	0.8	V	Operation
Output saturation voltage	V_{CE}	-	1.0	1.5	V	I_O=0.2A, vertically total
VREF bias current	I_{REF}	6	12	18	mA	I_O=0.2A, FWD or REV mode

© 2011 ROHM Co., Ltd. All rights reserved.

chanhvinh.com

●**Electrical characteristics** (BA6285AFP-Y, unless otherwise specified, Ta=25℃ and VCC=9V, VM=9V, VREF=9V)

Parameter	Symbol	Limits			Unit	Conditions
		Min.	Typ.	Max.		
Supply current 1	I_{CC1}	10	20	30	mA	FWD/REV mode
Supply current 2	I_{CC2}	21	42	63	mA	Brake mode
Standby current	I_{ST}	-	0	15	μA	Standby mode
Input threshold voltage H	V_{IH}	2.0	-	VCC	V	
Input threshold voltage L	V_{IL}	0	-	0.8	V	
Input bias current	I_{IH}	40	80	120	μA	V_{IN}=2V
Power save on voltage	V_{PSON}	-	-	0.8	V	Operation
Power save off voltage	V_{PSOFF}	2.0	-	VCC	V	Standby mode
Output saturation voltage	V_{CE}	-	1.0	1.5	V	I_O=0.2A, vertically total
VREF bias current	I_{REF}	9	15	21	mA	I_O=0.2A, FWD or REV mode

●**Electrical characteristics** (BA6920FP-Y, unless otherwise specified, Ta=25℃ and VCC=12V, VM=12V)

Parameter	Symbol	Limits			Unit	Conditions
		Min.	Typ.	Max.		
Supply current 1	I_{CC1}	5	8	12	mA	FWD/REV mode
Supply current 2	I_{CC2}	3	5	8	mA	Brake mode
Standby current	I_{ST}	-	0	15	μA	Standby mode
Input threshold voltage H	V_{IH}	3.0	-	VCC	V	
Input threshold voltage L	V_{IL}	0	-	0.8	V	
Input bias current	I_{IH}	100	200	300	μA	V_{IN}=3V
Power save on voltage	V_{PSON}	2.0	-	VCC	V	Standby mode
Power save off voltage	V_{PSOFF}	-	-	0.8	V	Operation
Output saturation voltage	V_{CE}	-	2.2	3.3	V	I_O=0.2A, vertically total
VREF bias current	I_{REF}	-	12	35	μA	I_O=0.1A, VREF=6V

© 2011 ROHM Co., Ltd. All rights reserved.

chanhvinh.com

●Electrical characteristic curves (Reference data)

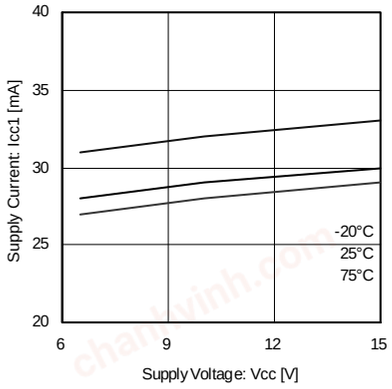

Fig.1 Supply current 1 (forward) (BA6956AN)

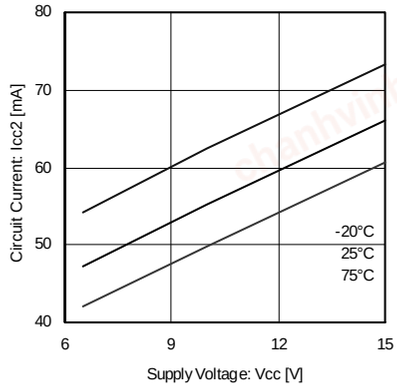

Fig.2 Supply current 2 (brake) (BA6956AN)

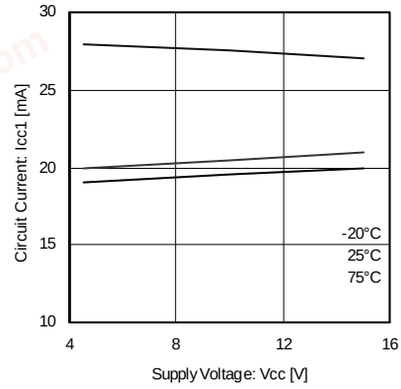

Fig.3 Supply current 1 (forward) (BA6287F)

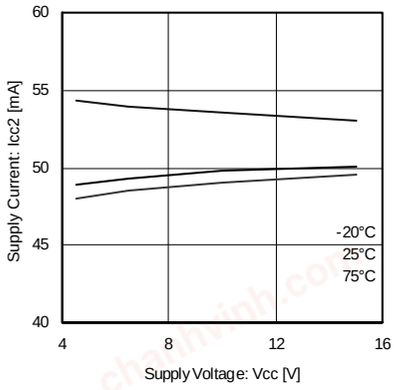

Fig.4 Supply current 2 (brake) (BA6287F)

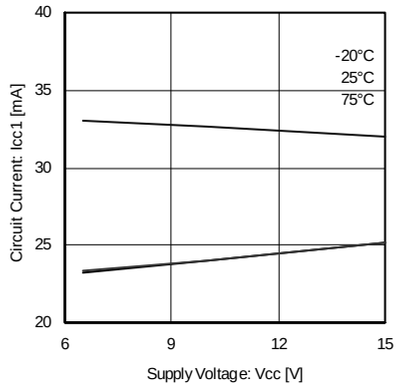

Fig.5 Supply current 1 (forward) (BA6285FS)

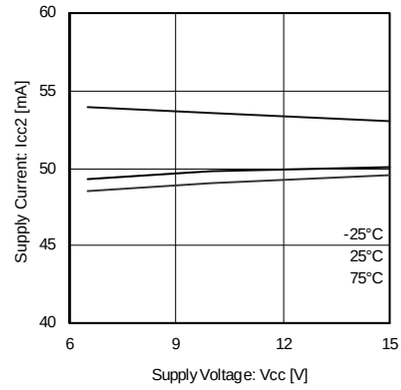

Fig.6 Supply current 2 (brake) (BA6285FS)

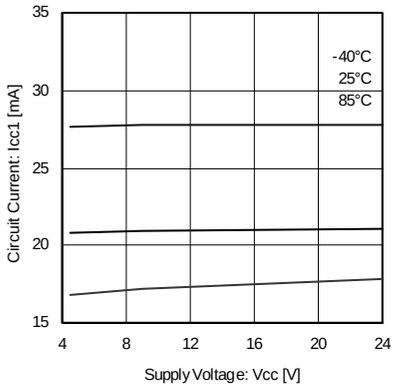

Fig.7 Supply current 1 (forward) (BA6285AFP-Y)

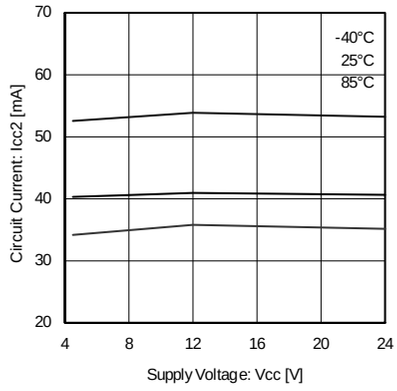

Fig.8 Supply current 2 (brake) (BA6285AFP-Y)

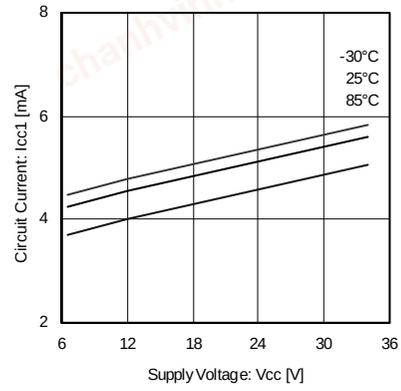

Fig.9 Supply current 1 (forward) (BA6920FP-Y)

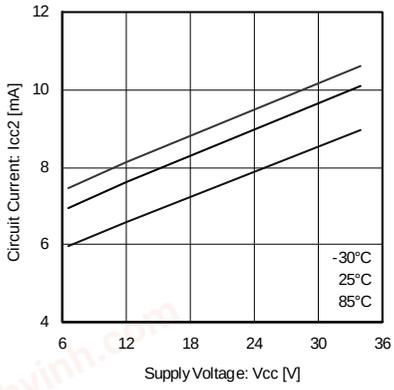

Fig.10 Supply current 2 (brake) (BA6920FP-Y)

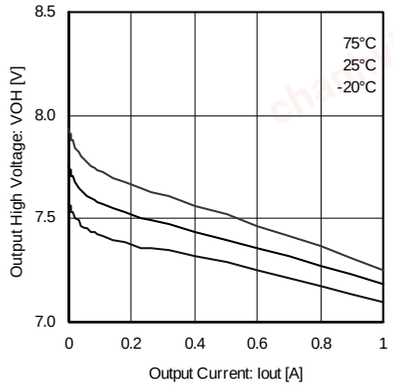

Fig.11 Output high voltage (BA6956AN)

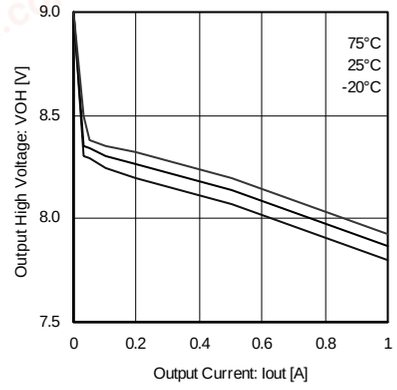

Fig.12 Output high voltage (BA6287F)

© 2011 ROHM Co., Ltd. All rights reserved.

chanhvinh.com

●Electrical characteristic curves (Reference data) - Continued

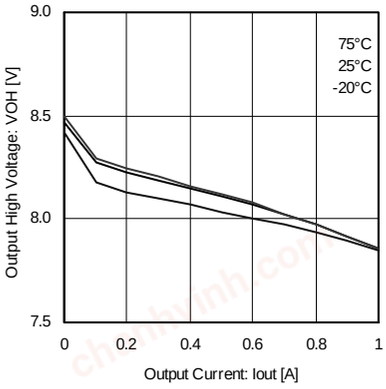

Fig.13 Output high voltage (BA6285FS)

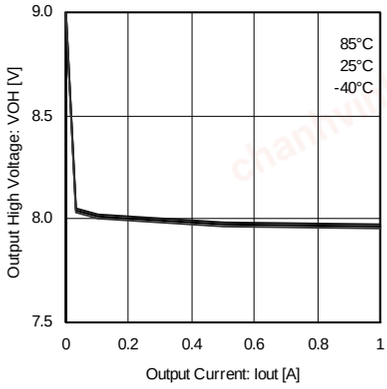

Fig.14 Output high voltage (BA6285AFP-Y)

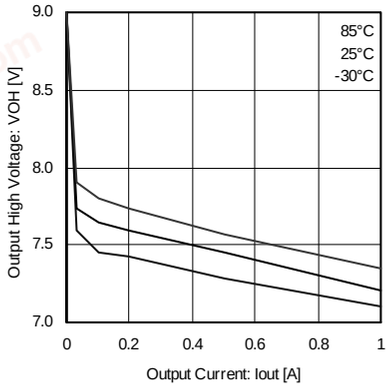

Fig.15 Output high voltage (BA6920FP-Y)

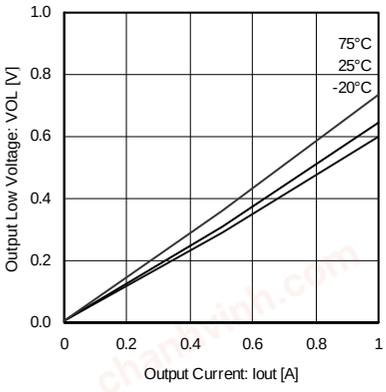

Fig.16 Output low voltage (BA6956AN)

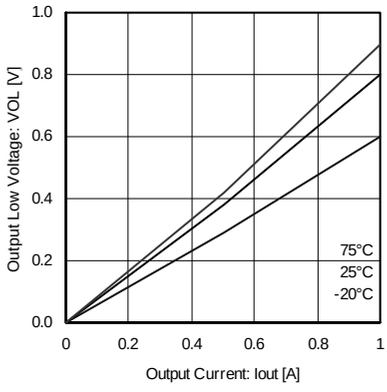

Fig.17 Output low voltage (BA6287F)

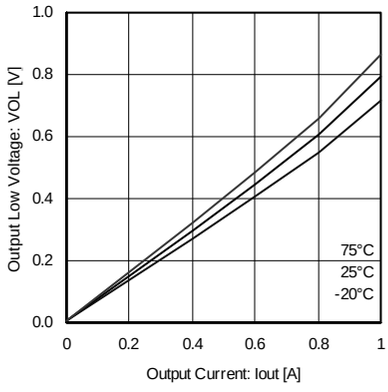

Fig.18 Output low voltage (BA6285FS)

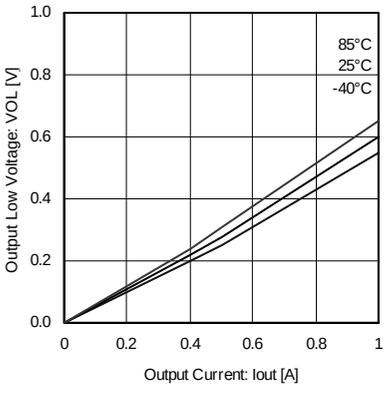

Fig.19 Output low voltage (BA6285AFP-Y)

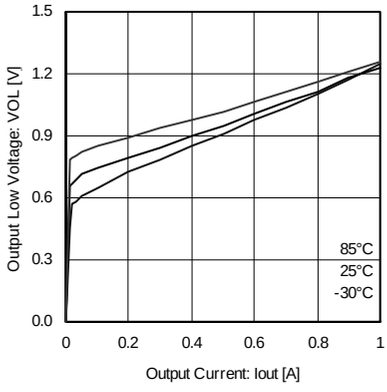

Fig.20 Output low voltage (BA6920FP-Y)

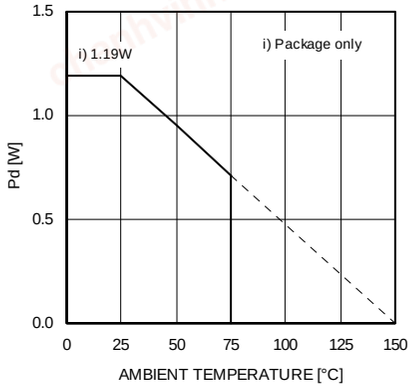

Fig.21 Thermal derating curve (SIP9)

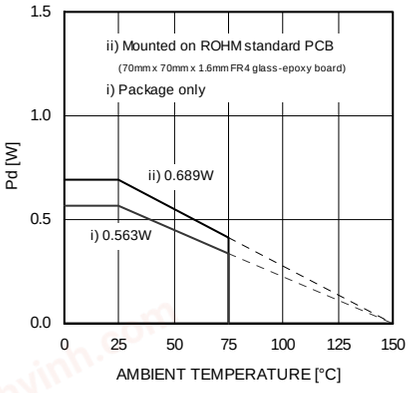

Fig.22 Thermal derating curve (SOP8)

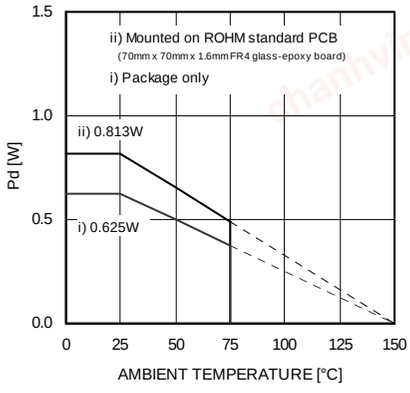

Fig.23 Thermal derating curve (SSOP-A16)

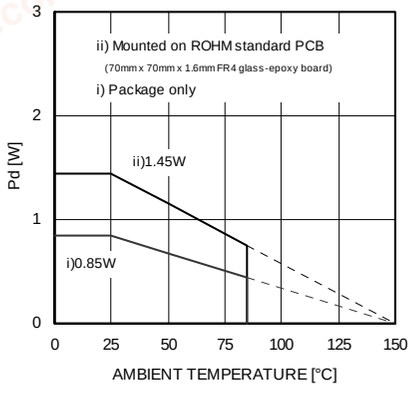

Fig.24 Thermal derating curve (HSOP25)

© 2011 ROHM Co., Ltd. All rights reserved.

chanhvinh.com

●Block diagram and pin configuration

BA6956AN

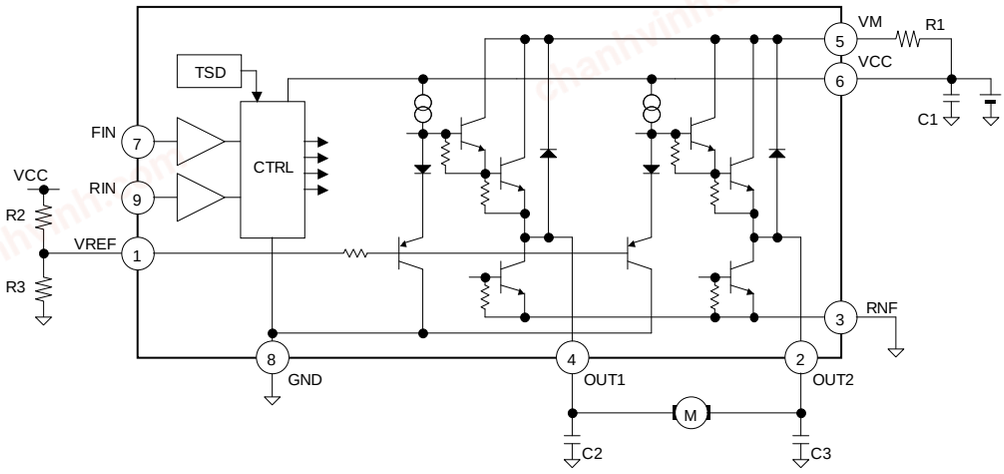

Fig.25 BA6956AN

Table 1 BA6956AN

Pin	Name	Function
1	VREF	Reference voltage setting pin
2	OUT2	Driver output
3	RNF	Power ground
4	OUT1	Driver output
5	VM	Power supply (driver stage)
6	VCC	Power supply (small signal)
7	FIN	Control input (forward)
8	GND	GND
9	RIN	Control input (reverse)

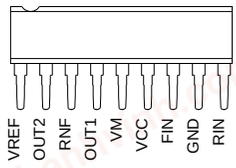

Fig.26 BA6956AN (SIP9)

© 2011 ROHM Co., Ltd. All rights reserved.

chanhvinh.com

●Block diagram and pin configuration

BA6287F

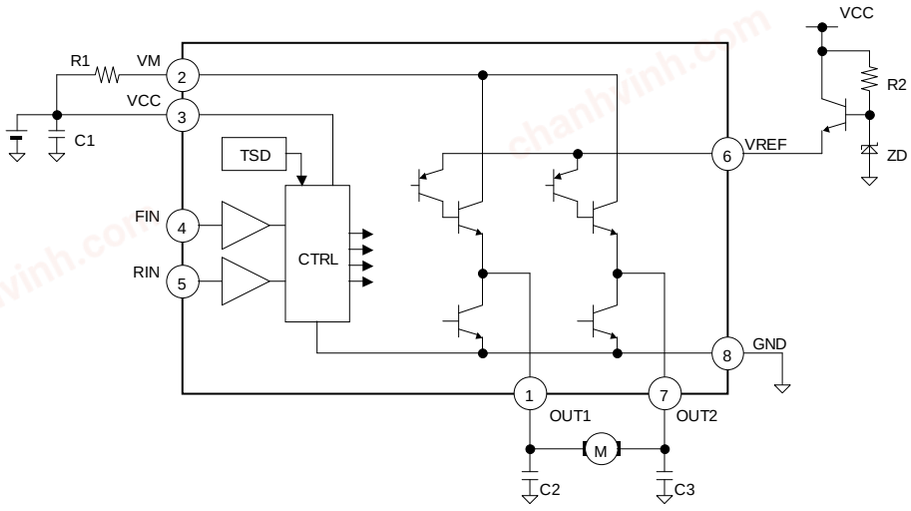

Fig.27 BA6287F

Table 2 BA6287F

Pin	Name	Function
1	OUT1	Driver output
2	VM	Power supply (driver stage)
3	VCC	Power supply (small signal)
4	FIN	Control input (forward)
5	RIN	Control input (reverse)
6	VREF	Reference voltage setting pin
7	OUT2	Driver output
8	GND	GND

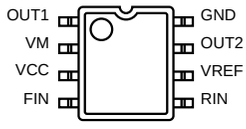

Fig.28 BA6287F (SOP8)

© 2011 ROHM Co., Ltd. All rights reserved.

chanhvinh.com

●Block diagram and pin configuration

BA6285FS

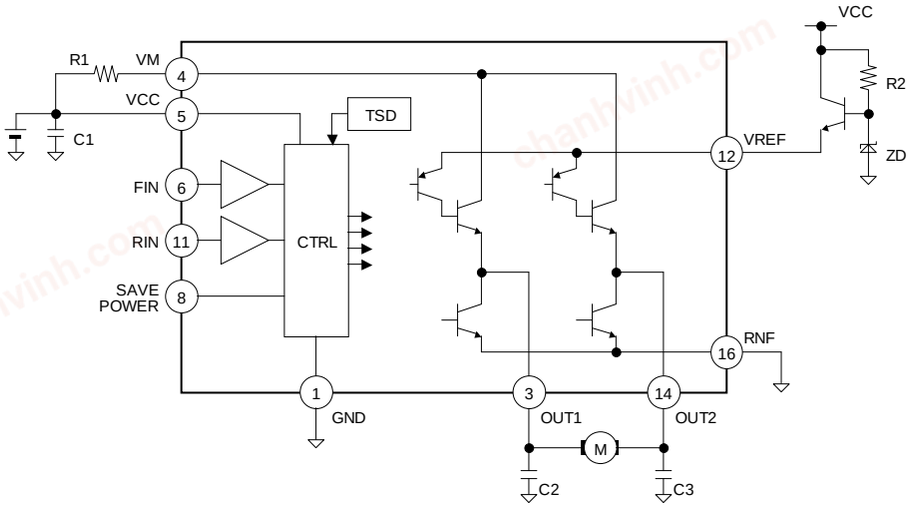

Fig.29 BA6285FS

Table 3 BA6285FS

Pin	Name	Function
1	GND	GND
2	NC	NC
3	OUT1	Driver output
4	VM	Power supply (driver stage)
5	VCC	Power supply (small signal)
6	FIN	Control input (forward)
7	NC	NC
8	PS	Power save enable pin
9	NC	NC
10	NC	NC
11	RIN	Control input (reverse)
12	VREF	Reference voltage setting pin
13	NC	NC
14	OUT2	Driver output
15	NC	NC
16	RNF	Power ground

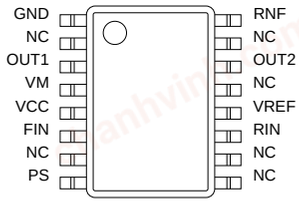

Fig.30 BA6285FS (SSOP-A16)

© 2011 ROHM Co., Ltd. All rights reserved.

chanhvinh.com

●Block diagram and pin configuration

BA6285AFP-Y

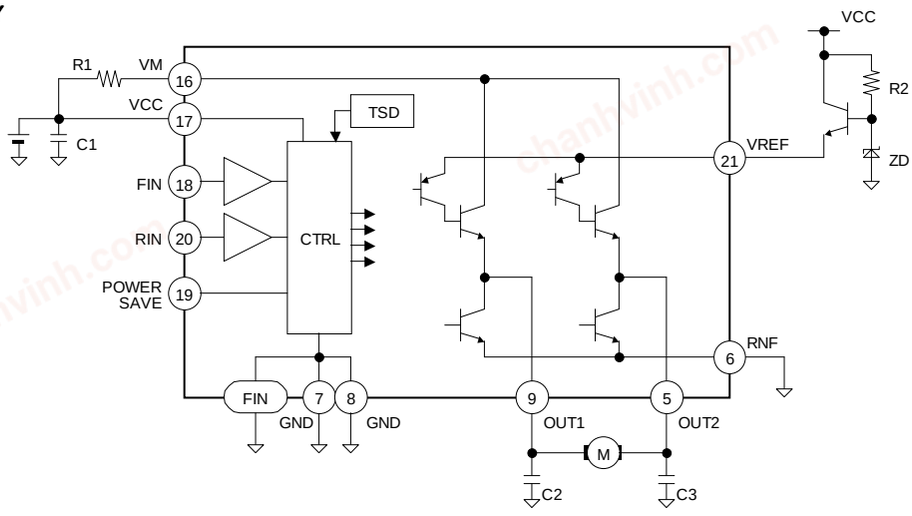

Fig.31 BA6285AFP-Y

Table 4 BA6285AFP-Y

Pin	Name	Function
1	NC	NC
2	NC	NC
3	NC	NC
4	NC	NC
5	OUT2	Driver output
6	RNF	Power ground
7	GND	GND
8	GND	GND
9	OUT1	Driver output
10	NC	NC
11	NC	NC
12	NC	NC
13	NC	NC
14	NC	NC
15	NC	NC
16	VM	Power supply (driver stage)
17	VCC	Power supply (small signal)
18	FIN	Control input (forward)
19	PS	Power save enable pin
20	RIN	Control input (reverse)
21	VREF	Reference voltage setting pin
22	NC	NC
23	NC	NC
24	NC	NC
25	NC	NC
FIN	GND	GND

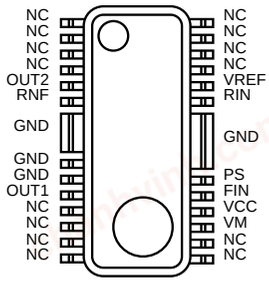

Fig.32 BA6285AFP-Y (HSOP25)

© 2011 ROHM Co., Ltd. All rights reserved.

chanhvinh.com

●Block diagram and pin configuration

BA6920FP-Y

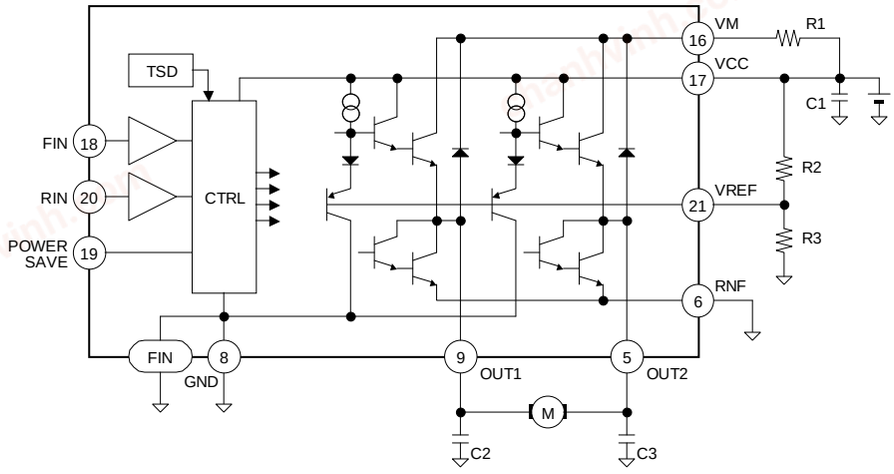

Fig.33 BA6920FP-Y

Table 5 BA6920FP-Y

Pin	Name	Function
1	NC	NC
2	NC	NC
3	NC	NC
4	NC	NC
5	OUT2	Driver output
6	RNF	Power ground
7	NC	NC
8	GND	GND
9	OUT1	Driver output
10	NC	NC
11	NC	NC
12	NC	NC
13	NC	NC
14	NC	NC
15	NC	NC
16	VM	Power supply (driver stage)
17	VCC	Power supply (small signal)
18	FIN	Control input (forward)
19	PS	Power save enable pin
20	RIN	Control input (reverse)
21	VREF	Reference voltage setting pin
22	NC	NC
23	NC	NC
24	NC	NC
25	NC	NC
FIN	GND	GND

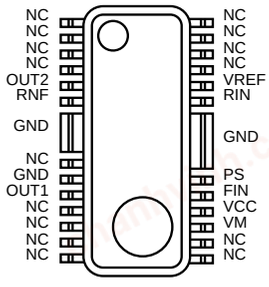

Fig.34 BA6920FP-Y (HSOP25)

© 2011 ROHM Co., Ltd. All rights reserved.

chanhvinh.com

●External application components

1) Resistor for the current limitation, R1
This is a current limiting resistor for collector loss reduction and at the time of short-circuited output. It depends on the power supply voltage used, etc., but choose resistance of about 5 to 10Ω. In addition, set resistance with utmost care to voltage drop caused by inrush current that flows when the motor is started.

2) Resistors and zener diode for the output high voltage setting, R2, R3 and ZD
These are the resistors and zener diode used when output high voltage is set. As for the voltage, only (V_{SAT} + V_F) lower than the VREF pin voltage for BA6287F, BA6285FS and BA6285AFP-Y. (Reference values; V_{SAT} ≈ 0.25V, V_F ≈ 0.75V) Zener diode ZD is recommended to be used instead of resistor R3 when the power supply voltage is unstable for BA6956AN and BA6920FP-Y.

3) Stabilization capacitor for the power supply line, C1
Please connect the capacitor of 1μF to 100μF for the stabilization of the power supply line, and confirm the motor operation.

4) Phase compensating capacitor, C2, C3
Noise is generated in output pins or oscillation results in accord with the set mounting state such as power supply circuit, motor characteristics, PCB pattern artwork, etc. As noise oscillation measures, connect 0.01μF to 0.1μF capacitors.

●Functional descriptions

1) Operation modes

Table 6 Logic table

IN1	IN2	OUT1	OUT2	Operation
L	L	OPEN*	OPEN*	Stop (idling)
H	L	H	L	Forward (OUT1 > OUT2)
L	H	L	H	Reverse (OUT1 < OUT2)
H	H	L	L	Brake (stop)

* OPEN is the off state of all output transistors. Please note that this is the state of the connected diodes, which differs from that of the mechanical relay.
** Output OUT1 and OUT2 become OPEN regardless of the input logic of FIN and RIN when switching to the power save mode with the POWERSAVE pin.

a) Stand-by mode
In stand-by mode, all output power transistors are turned off, and the motor output goes to high impedance.

b) Forward mode
This operating mode is defined as the forward rotation of the motor when the OUT1 pin is high and OUT2 pin is low. When the motor is connected between the OUT1 and OUT2 pins, the current flows from OUT1 to OUT2.

c) Reverse mode
This operating mode is defined as the reverse rotation of the motor when the OUT1 pin is low and OUT2 pin is high. When the motor is connected between the OUT1 and OUT2 pins, the current flows from OUT2 to OUT1.

d) Brake mode
This operating mode is used to quickly stop the motor (short circuit brake).

Note) Switching of rotating direction (FWD/REV)
When the rotating direction is changed over by the motor rotating condition, switch the direction after the motor is temporarily brought to the BRAKE condition or OPEN condition. It is recommended to keep the relevant conditions as follows:
via BRAKE: Longer than braking time*. (* the time required for the output L terminal to achieve potential below GND when brake is activated.)
via OPEN: The time longer than 1 ms is recommended.

© 2011 ROHM Co., Ltd. All rights reserved.

chanhvinh.com

2) Output high voltage setting

This function optionally sets output voltage by the output high voltage setting pin and controls the motor rotating speed. However, when the output high voltage is set to a low level, consumption at IC increases. Carry out thermal design with sufficient margin incorporated with the power dissipation (Pd) under the actual application condition taken into account.

a) BA6287F, BA6285FS, BA6285AFP-Y

The circuit diagram associated with the output high voltage setting VREF pin is as per shown on the right. The output high and low voltages V_{OH} and V_{OL} are expressed by:

$V_{OH} = VREF - (V_{SAT(Q1)} + V_{F(Q2)})$
$V_{OL} = V_{SAT(Q3)}$
(Reference values; $V_{SAT} \approx 0.15V$, $V_F \approx 0.7V$)

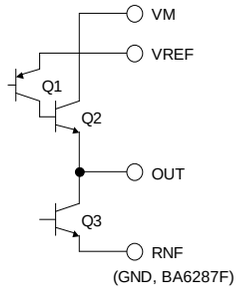

Fig.35 BA6287F, BD6285FS, BA6285AFP-Y

In addition, the relation of VREF voltage to output voltage is expressed by:

$(V_{SAT(Q1)} + V_{F(Q2)}) < VREF < VM - V_{SAT(Q2)} + V_{F(Q2)} + V_{SAT(Q1)}$

Therefore, when the VREF voltage condition is as follows, the output high voltage is restricted.

$VREF > VM - V_{SAT(Q2)} + V_{SAT(Q1)} + V_{F(Q2)}$
$V_{OH} = VM - V_{SAT(Q2)}$

b) BA6956AN, BA6920FP-Y

The circuit diagram associated with the output high voltage setting VREF pin is as per shown on the right. The output high and low voltages V_{OH} and V_{OL} are expressed by:

$V_{OH} = VREF + (V_{F(Q5)} + V_{F(Q4)}) - (V_{F(Q2)} + V_{F(Q3)})$
$\approx VREF$
$V_{OL} = V_{SAT(Q6)}$ (BA6956AN)
$V_{OL} = V_{SAT(Q7)} + V_{F(Q6)}$ (BA6920FP-Y)
(Reference values; $V_{SAT} \approx 0.15V$, $V_F \approx 0.7V$)

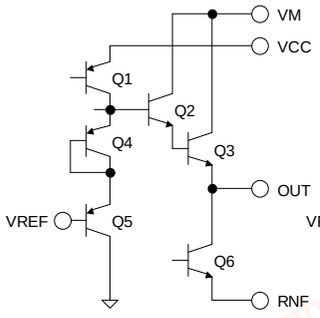

Fig.36 BA6956AN

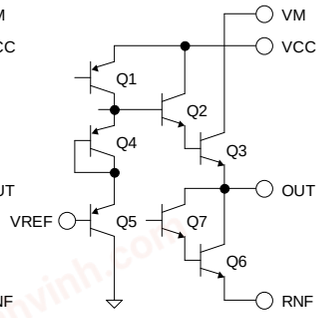

Fig.37 BA6920FP-Y

The output high voltage controllable range is expressed by:

$VREF < VCC - V_{SAT(Q1)} - V_{F(Q4)} - V_{F(Q5)}$
$VREF < VM - (V_{SAT(Q2)} + V_{F(Q3)}) + (V_{F(Q2)} + V_{F(Q3)}) - (V_{F(Q4)} + V_{F(Q5)})$ (BA6956AN)
$VREF < VM - V_{SAT(Q3)} + (V_{F(Q2)} + V_{F(Q3)}) - (V_{F(Q4)} + V_{F(Q5)})$ (BA6920FP-Y)

When the VREF voltage condition is as follows, the output high voltage is restricted.
$VREF > VCC - V_{SAT(Q1)} - V_{F(Q4)} - V_{F(Q5)}$
$VREF > VM - (V_{SAT(Q2)} + V_{F(Q3)}) + (V_{F(Q2)} + V_{F(Q3)}) - (V_{F(Q4)} + V_{F(Q5)})$ (BA6956AN)
$VREF > VM - V_{SAT(Q3)} + (V_{F(Q2)} + V_{F(Q3)}) - (V_{F(Q4)} + V_{F(Q5)})$ (BA6920FP-Y)

$V_{OH} = VCC - V_{SAT(Q1)} - V_{F(Q2)} - V_{F(Q3)}$
$V_{OH} = VM - V_{SAT(Q2)} - V_{F(Q3)}$ (BA6956AN)
$V_{OH} = VM - V_{SAT(Q3)}$ (BA6920FP-Y)

© 2011 ROHM Co., Ltd. All rights reserved.

chanhvinh.com

●Interfaces

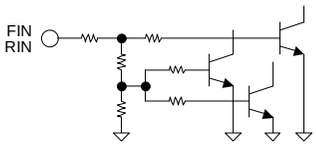

Fig. 38 FIN, RIN

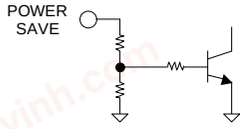

(BA6285FS, BA6285AFP-Y, BA6920FP-Y)

Fig.39 POWER SAVE

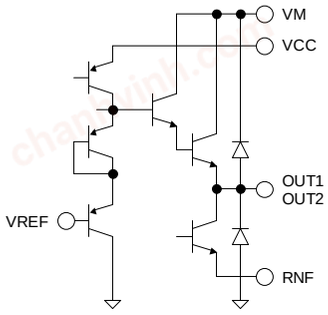

(BA6956AN)

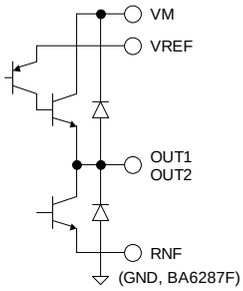

(BA6287F, BA6285FS, BA6285AFP-Y)

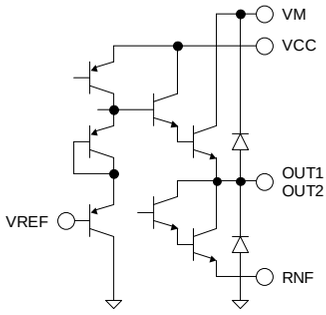

(BA6920FP-Y)

Fig. 40 VCC, VM, OUT1, OUT2, VREF, RNF, GND

© 2011 ROHM Co., Ltd. All rights reserved.

chanhvinh.com

●Notes for use

1) **Absolute maximum ratings**
Devices may be destroyed when supply voltage or operating temperature exceeds the absolute maximum rating. Because the cause of this damage cannot be identified as, for example, a short circuit or an open circuit, it is important to consider circuit protection measures – such as adding fuses – if any value in excess of absolute maximum ratings is to be implemented.

2) **Connecting the power supply connector backward**
Connecting the power supply in reverse polarity can damage the IC. Take precautions against reverse polarity when connecting the power supply lines, such as adding an external direction diode.

3) **Power supply lines**
Return current generated by the motor's Back-EMF requires countermeasures, such as providing a return current path by inserting capacitors across the power supply and GND (10μF, ceramic capacitor is recommended). In this case, it is important to conclusively confirm that none of the negative effects sometimes seen with electrolytic capacitors – including a capacitance drop at low temperatures - occurs. Also, the connected power supply must have sufficient current absorbing capability. Otherwise, the regenerated current will increase voltage on the power supply line, which may in turn cause problems with the product, including peripheral circuits exceeding the absolute maximum rating. To help protect against damage or degradation, physical safety measures should be taken, such as providing a voltage clamping diode across the power supply and GND.

4) **Electrical potential at GND**
Keep the GND terminal potential to the minimum potential under any operating condition. In addition, check to determine whether there is any terminal that provides voltage below GND, including the voltage during transient phenomena. When both a small signal GND and high current GND are present, single-point grounding (at the set's reference point) is recommended, in order to separate the small signal and high current GND, and to ensure that voltage changes due to the wiring resistance and high current do not affect the voltage at the small signal GND. In the same way, care must be taken to avoid changes in the GND wire pattern in any external connected component.

5) **Thermal design**
Use a thermal design that allows for a sufficient margin in light of the power dissipation (Pd) under actual operating conditions.

6) **ASO - Area of Safety Operation**
When using the IC, set the output transistor so that it does not exceed absolute maximum ratings or ASO.

7) **Inter-pin shorts and mounting errors**
Use caution when positioning the IC for mounting on printed circuit boards. The IC may be damaged if there is any connection error, or if pins are shorted together.

8) **Operation in strong electromagnetic fields**
Using this product in strong electromagnetic fields may cause IC malfunctions. Use extreme caution with electromagnetic fields.

9) **Built-in thermal shutdown (TSD) circuit**
The TSD circuit is designed only to shut the IC off to prevent thermal runaway. It is not designed to protect the IC or guarantee its operation in the presence of extreme heat. Do not continue to use the IC after the TSD circuit is activated, and do not operate the IC in an environment where activation of the circuit is assumed.

10) **Capacitor between output and GND**
In the event a large capacitor is connected between the output and GND, if VCC and VIN are short-circuited with 0V or GND for any reason, the current charged in the capacitor flows into the output and may destroy the IC. Use a capacitor smaller than 0.47μF between output and GND.

11) **Testing on application boards**
When testing the IC on an application board, connecting a capacitor to a low impedance pin subjects the IC to stress. Therefore, always discharge capacitors after each process or step. Always turn the IC's power supply off before connecting it to or removing it from the test setup during the inspection process. Ground the IC during assembly steps as an antistatic measure. Use similar precaution when transporting or storing the IC.

© 2011 ROHM Co., Ltd. All rights reserved.

chanhvinh.com

12) Regarding the input pin of the IC

This monolithic IC contains P+ isolation and P substrate layers between adjacent elements, in order to keep them isolated. P-N junctions are formed at the intersection of these P layers with the N layers of other elements, creating a parasitic diode or transistor. For example, the relation between each potential is as follows:

When GND > Pin A and GND > Pin B, the P-N junction operates as a parasitic diode.

When GND > Pin B, the P-N junction operates as a parasitic transistor.

Parasitic diodes inevitably occur in the structure of the IC. The operation of parasitic diodes can result in mutual interference among circuits, as well as operating malfunctions and physical damage. Therefore, do not use methods by which parasitic diodes operate, such as applying a voltage lower than the GND (P substrate) voltage to an input pin.

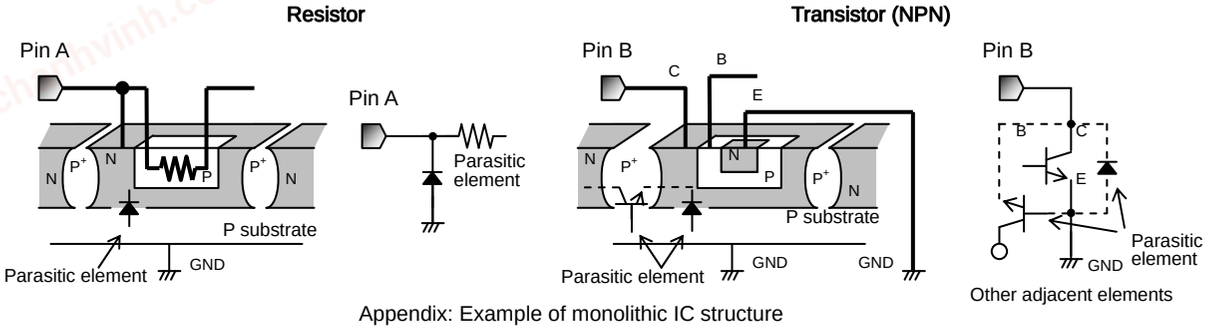

Appendix: Example of monolithic IC structure

© 2011 ROHM Co., Ltd. All rights reserved.

chanhvinh.com

●Ordering part number

B	A	6	2	8	5	A	F	P	-	Y	E	2

Part No.

Part No.
6956A
6287
6285
6285A
6920

Package
N : SIP9
F : SOP8
FS : SSOP-A16
FP-Y : HSOP25

Packaging and forming specification
E2: Embossed tape and reel
None: Tube

SIP9

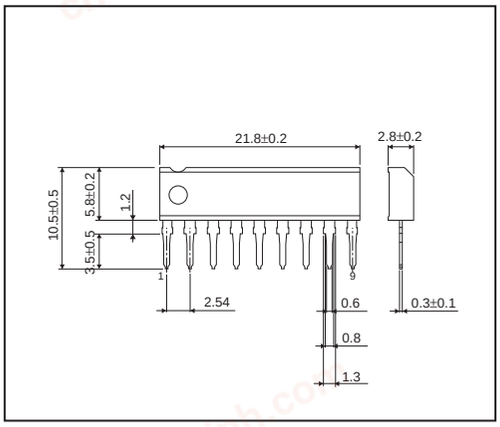

<Tape and Reel information>

Container	Tube
Quantity	1000pcs
Direction of feed	Direction of products is fixed in a container tube

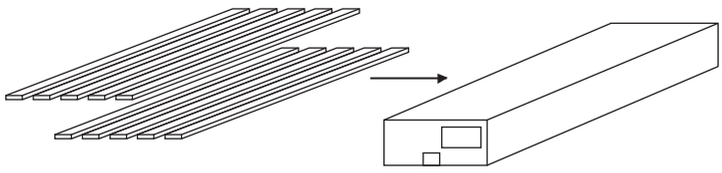

∗Order quantity needs to be multiple of the minimum quantity.

SOP8

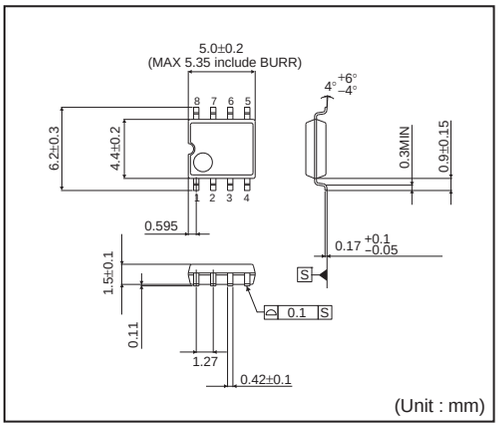

<Tape and Reel information>

Tape	Embossed carrier tape
Quantity	2500pcs
Direction of feed	E2 (The direction is the 1pin of product is at the upper left when you hold reel on the left hand and you pull out the tape on the right hand)

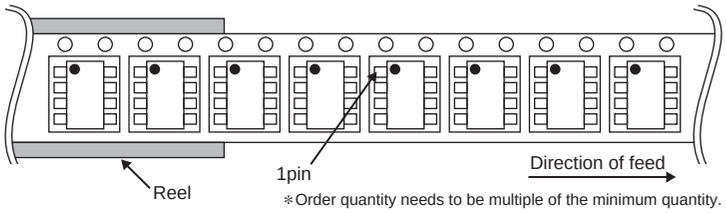

∗Order quantity needs to be multiple of the minimum quantity.

SSOP-A16

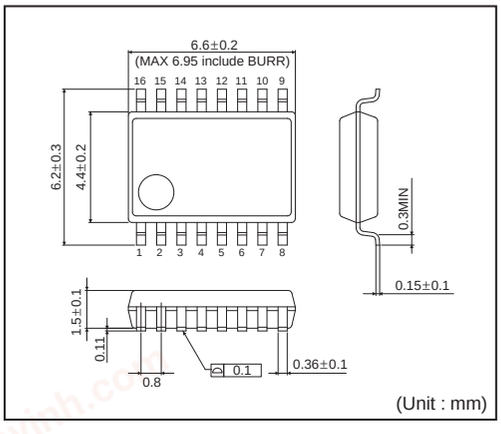

<Tape and Reel information>

Tape	Embossed carrier tape
Quantity	2500pcs
Direction of feed	E2 (The direction is the 1pin of product is at the upper left when you hold reel on the left hand and you pull out the tape on the right hand)

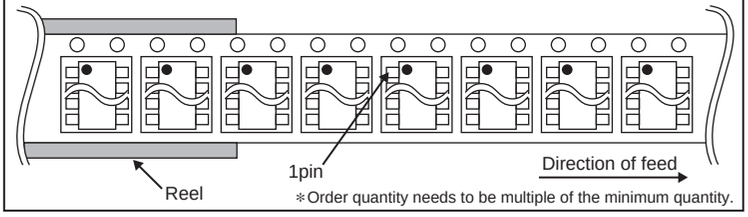

∗Order quantity needs to be multiple of the minimum quantity.

© 2011 ROHM Co., Ltd. All rights reserved.

chanhvinh.com

HSOP25

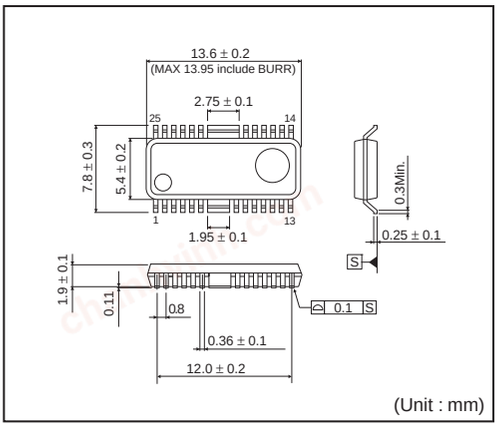

<Tape and Reel information>

Tape	Embossed carrier tape
Quantity	2000pcs
Direction of feed	E2 (The direction is the 1pin of product is at the upper left when you hold reel on the left hand and you pull out the tape on the right hand)

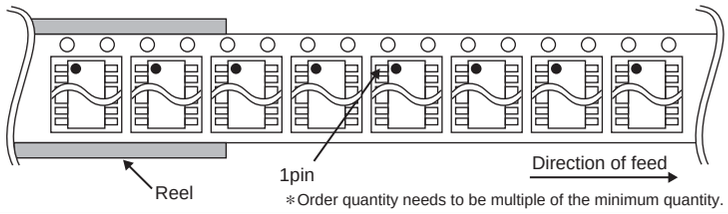

∗Order quantity needs to be multiple of the minimum quantity.

© 2011 ROHM Co., Ltd. All rights reserved.

chanhvinh.com

Notice

Precaution on using ROHM Products

1. Our Products are designed and manufactured for application in ordinary electronic equipments (such as AV equipment, OA equipment, telecommunication equipment, home electronic appliances, amusement equipment, etc.). If you intend to use our Products in devices requiring extremely high reliability (such as medical equipment (Note 1), transport equipment, traffic equipment, aircraft/spacecraft, nuclear power controllers, fuel controllers, car equipment including car accessories, safety devices, etc.) and whose malfunction or failure may cause loss of human life, bodily injury or serious damage to property ("Specific Applications"), please consult with the ROHM sales representative in advance. Unless otherwise agreed in writing by ROHM in advance, ROHM shall not be in any way responsible or liable for any damages, expenses or losses incurred by you or third parties arising from the use of any ROHM's Products for Specific Applications.

(Note1) Medical Equipment Classification of the Specific Applications

JAPAN	USA	EU	CHINA
CLASSⅢ	CLASSⅢ	CLASSⅡb	CLASSⅢ
CLASSⅣ		CLASSⅢ	

2. ROHM designs and manufactures its Products subject to strict quality control system. However, semiconductor products can fail or malfunction at a certain rate. Please be sure to implement, at your own responsibilities, adequate safety measures including but not limited to fail-safe design against the physical injury, damage to any property, which a failure or malfunction of our Products may cause. The following are examples of safety measures:
   [a] Installation of protection circuits or other protective devices to improve system safety
   [b] Installation of redundant circuits to reduce the impact of single or multiple circuit failure

3. Our Products are designed and manufactured for use under standard conditions and not under any special or extraordinary environments or conditions, as exemplified below. Accordingly, ROHM shall not be in any way responsible or liable for any damages, expenses or losses arising from the use of any ROHM's Products under any special or extraordinary environments or conditions. If you intend to use our Products under any special or extraordinary environments or conditions (as exemplified below), your independent verification and confirmation of product performance, reliability, etc, prior to use, must be necessary:
   [a] Use of our Products in any types of liquid, including water, oils, chemicals, and organic solvents
   [b] Use of our Products outdoors or in places where the Products are exposed to direct sunlight or dust
   [c] Use of our Products in places where the Products are exposed to sea wind or corrosive gases, including Cl_2, H_2S, NH_3, SO_2, and NO_2
   [d] Use of our Products in places where the Products are exposed to static electricity or electromagnetic waves
   [e] Use of our Products in proximity to heat-producing components, plastic cords, or other flammable items
   [f] Sealing or coating our Products with resin or other coating materials
   [g] Use of our Products without cleaning residue of flux (even if you use no-clean type fluxes, cleaning residue of flux is recommended); or Washing our Products by using water or water-soluble cleaning agents for cleaning residue after soldering
   [h] Use of the Products in places subject to dew condensation

4. The Products are not subject to radiation-proof design.

5. Please verify and confirm characteristics of the final or mounted products in using the Products.

6. In particular, if a transient load (a large amount of load applied in a short period of time, such as pulse. is applied, confirmation of performance characteristics after on-board mounting is strongly recommended. Avoid applying power exceeding normal rated power; exceeding the power rating under steady-state loading condition may negatively affect product performance and reliability.

7. De-rate Power Dissipation (Pd) depending on Ambient temperature (Ta). When used in sealed area, confirm the actual ambient temperature.

8. Confirm that operation temperature is within the specified range described in the product specification.

9. ROHM shall not be in any way responsible or liable for failure induced under deviant condition from what is defined in this document.

Precaution for Mounting / Circuit board design

1. When a highly active halogenous (chlorine, bromine, etc.) flux is used, the residue of flux may negatively affect product performance and reliability.

2. In principle, the reflow soldering method must be used; if flow soldering method is preferred, please consult with the ROHM representative in advance.

For details, please refer to ROHM Mounting specification

© 2014 ROHM Co., Ltd. All rights reserved.

chanhvinh.com

Precautions Regarding Application Examples and External Circuits

1. If change is made to the constant of an external circuit, please allow a sufficient margin considering variations of the characteristics of the Products and external components, including transient characteristics, as well as static characteristics.

2. You agree that application notes, reference designs, and associated data and information contained in this document are presented only as guidance for Products use. Therefore, in case you use such information, you are solely responsible for it and you must exercise your own independent verification and judgment in the use of such information contained in this document. ROHM shall not be in any way responsible or liable for any damages, expenses or losses incurred by you or third parties arising from the use of such information.

Precaution for Electrostatic

This Product is electrostatic sensitive product, which may be damaged due to electrostatic discharge. Please take proper caution in your manufacturing process and storage so that voltage exceeding the Products maximum rating will not be applied to Products. Please take special care under dry condition (e.g. Grounding of human body / equipment / solder iron, isolation from charged objects, setting of Ionizer, friction prevention and temperature / humidity control).

Precaution for Storage / Transportation

1. Product performance and soldered connections may deteriorate if the Products are stored in the places where:
   - [a] the Products are exposed to sea winds or corrosive gases, including Cl2, H2S, NH3, SO2, and NO2
   - [b] the temperature or humidity exceeds those recommended by ROHM
   - [c] the Products are exposed to direct sunshine or condensation
   - [d] the Products are exposed to high Electrostatic

2. Even under ROHM recommended storage condition, solderability of products out of recommended storage time period may be degraded. It is strongly recommended to confirm solderability before using Products of which storage time is exceeding the recommended storage time period.

3. Store / transport cartons in the correct direction, which is indicated on a carton with a symbol. Otherwise bent leads may occur due to excessive stress applied when dropping of a carton.

4. Use Products within the specified time after opening a humidity barrier bag. Baking is required before using Products of which storage time is exceeding the recommended storage time period.

Precaution for Product Label

QR code printed on ROHM Products label is for ROHM's internal use only.

Precaution for Disposition

When disposing Products please dispose them properly using an authorized industry waste company.

Precaution for Foreign Exchange and Foreign Trade act

Since our Products might fall under controlled goods prescribed by the applicable foreign exchange and foreign trade act, please consult with ROHM representative in case of export.

Precaution Regarding Intellectual Property Rights

1. All information and data including but not limited to application example contained in this document is for reference only. ROHM does not warrant that foregoing information or data will not infringe any intellectual property rights or any other rights of any third party regarding such information or data. ROHM shall not be in any way responsible or liable for infringement of any intellectual property rights or other damages arising from use of such information or data.:

2. No license, expressly or implied, is granted hereby under any intellectual property rights or other rights of ROHM or any third parties with respect to the information contained in this document.

Other Precaution

1. This document may not be reprinted or reproduced, in whole or in part, without prior written consent of ROHM.

2. The Products may not be disassembled, converted, modified, reproduced or otherwise changed without prior written consent of ROHM.

3. In no event shall you use in any way whatsoever the Products and the related technical information contained in the Products or this document for any military purposes, including but not limited to, the development of mass-destruction weapons.

4. The proper names of companies or products described in this document are trademarks or registered trademarks of ROHM, its affiliated companies or third parties.

© 2014 ROHM Co., Ltd. All rights reserved.

chanhvinh.com

General Precaution

1. Before you use our Products, you are requested to carefully read this document and fully understand its contents. ROHM shall not be in any way responsible or liable for failure, malfunction or accident arising from the use of any ROHM's Products against warning, caution or note contained in this document.

2. All information contained in this document is current as of the issuing date and subject to change without any prior notice. Before purchasing or using ROHM's Products, please confirm the latest information with a ROHM sales representative.

3. The information contained in this document is provided on an "as is" basis and ROHM does not warrant that all information contained in this document is accurate and/or error-free. ROHM shall not be in any way responsible or liable for any damages, expenses or losses incurred by you or third parties resulting from inaccuracy or errors of or concerning such information.

© 2014 ROHM Co., Ltd. All rights reserved.