chanhvinh.com

Datasheet

Comparator

Automotive
Ground Sense Comparators

BA2903Yxxx-M BA2901Yxx-M

General Description

BA2903Yxxx-M and BA2901Yxx-M are manufactured for automotive. These products are open collector output comparators that can operate in single power supply. It features wide operating voltage range of 2V to 36V and with low supply current.
Applications are Car Navigation System, Car Audio, Automotive Body and Exteriors.

Features

- AEC-Q100 Qualified
- Single or Dual Power Supply Operation
- Wide Operating Supply Voltage
- Standard Comparator Pin-assignments
- Common-mode Input Voltage Range includes ground level.
- Wide Temperature Range

Application

- Car Navigation System
- Car Audio
- Automotive Body and Exteriors

Key Specifications

- Operating Supply Voltage Range
  - single supply : +2.0V to +36V
  - split supply : ±1.0V to ±18V
- Supply Current
  - BA2903Yxxx-M(Dual) 0.6mA(Typ)
  - BA2901Yxx-M(Quad) 0.8mA(Typ)
- Input Bias Current : 50nA(Typ)
- Input Offset Current : 5nA(Typ)
- Operating Temperature Range : -40°C to +125°C

Packages	W(Typ) x D(Typ) x H(Max)
SOP8	5.00mm x 6.20mm x 1.71mm
SSOP-B8	3.00mm x 6.40mm x 1.35mm
MSOP8	2.90mm x 4.00mm x 0.90mm
SOP14	8.70mm x 6.20mm x 1.71mm
SSOP-B14	5.00mm x 6.40mm x 1.35mm

Simplified schematic

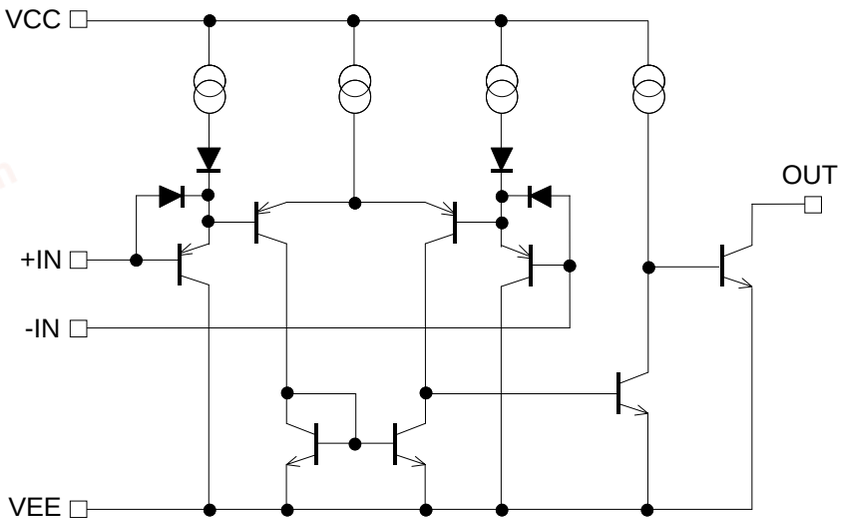

Figure 1. Simplified schematic (one channel only)

© 2012 ROHM Co., Ltd. All rights reserved.

chanhvinh.com

Pin Configuration

BA2903YF-M : SOP8
BA2903YFV-M : SSOP-B8
BA2903YFVM-M : MSOP8

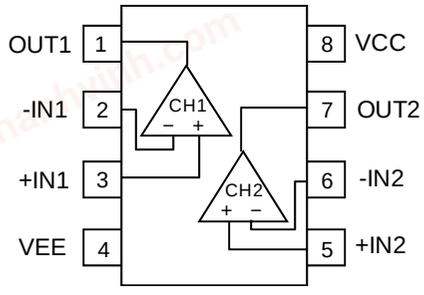

Pin No.	Pin Name
1	OUT1
2	-IN1
3	+IN1
4	VEE
5	+IN2
6	-IN2
7	OUT2
8	VCC

BA2901YF-M : SOP14
BA2901YFV-M : SSOP-B14

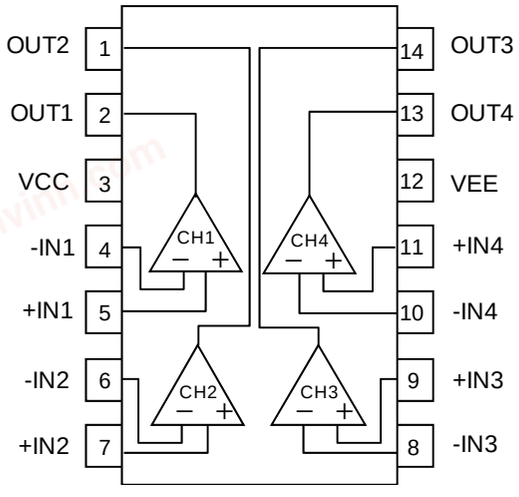

Pin No.	Pin Name
1	OUT2
2	OUT1
3	VCC
4	-IN1
5	+IN1
6	-IN2
7	+IN2
8	-IN3
9	+IN3
10	-IN4
11	+IN4
12	VEE
13	OUT4
14	OUT3

Package				
SOP8	SSOP-B8	MSOP8	SOP14	SSOP-B14
BA2903YF-M	BA2903YFV-M	BA2903YFVM-M	BA2901YF-M	BA2901YFV-M

© 2012 ROHM Co., Ltd. All rights reserved.

chanhvinh.com

Ordering Information

B A 2 9 0 x Y x x x - M x x

Part Number
BA2903Yxxx
BA2901Yxx

Package
F : SOP8
SOP14
FV : SSOP-B8
: SSOP-B14
FVM : MSOP8

Packaging and forming specification
M: Automotive
E2: Embossed tape and reel
(SOP8/SOP14/SSOP-B8/
SSOP-B14)
TR: Embossed tape and reel
(MSOP8)

Line-up

Topr	Operating Supply Voltage	Dual/Quad	Package		Orderable Part Number
-40°C to +125°C	+2.0V to +36V	Dual	SOP8	Reel of 2500	BA2903YF-ME2
			SSOP-B8	Reel of 2500	BA2903YFV-ME2
			MSOP8	Reel of 3000	BA2903YFVM-MTR
		Quad	SOP14	Reel of 2500	BA2901YF-ME2
			SSOP-B14	Reel of 2500	BA2901YFV-ME2

Absolute Maximum Ratings (T_A=25°C)

Parameter	Symbol		Ratings		Unit
			BA2903Yxxx-C	BA2901Yxx-C	
Supply Voltage	VCC-VEE		+36		V
Power dissipation	P_D	SOP8	0.77 (Note 1,6)	-	W
		SSOP-B8	0.62 (Note 2,6)	-	
		MSOP8	0.58 (Note 3,6)	-	
		SOP14	-	0.56 (Note 4,6)	
		SSOP-B14	-	0.87 (Note 5,6)	
Differential Input Voltage (Note 7)	V_{ID}		+36		V
Input Common-mode Voltage Range	V_{ICM}		(VEE-0.3) to (VEE+36)		V
Input Current (Note 8)	I_I		-10		mA
Operating Supply Voltage	V_{opr}		+2.0 ~ +36 (±1.0 ~ ±18)		V
Operating Temperature Range	T_{opr}		-40 to +125		°C
Storage Temperature Range	T_{stg}		-55 to +150		°C
Maximum junction Temperature	T_{Jmax}		+150		°C

(Note 1) To use at temperature above T_A=25°C reduce 6.2mW/°C.
(Note 2) To use at temperature above T_A=25°C reduce 5.0mW/°C.
(Note 3) To use at temperature above T_A=25°C reduce 4.7mW/°C.
(Note 4) To use at temperature above T_A=25°C reduce 4.5mW/°C.
(Note 5) To use at temperature above T_A=25°C reduce 7.0mW/°C.
(Note 6) Mounted on a FR4 glass epoxy PCB 70mm×70mm×1.6mm (copper foil area less than 3%).
(Note 7) The voltage difference between inverting input and non-inverting input is the differential input voltage.
Then input terminal voltage is set to more than VEE.
(Note 8) An excessive input current will flow when input voltages of less than VEE-0.6V are applied.
The input current can be set to less than the rated current by adding a limiting resistor.

Caution: Operating the IC over the absolute maximum ratings may damage the IC. The damage can either be a short circuit between pins or an open circuit between pins and the internal circuitry. Therefore, it is important to consider circuit protection measures, such as adding a fuse, in case the IC is operated over the absolute maximum ratings.

© 2012 ROHM Co., Ltd. All rights reserved.

chanhvinh.com

Electrical Characteristics

○BA2903Yxxx-M (Unless otherwise specified VCC=+5V, VEE=0V)

Parameter	Symbol	Temperature range	Limits			Unit	Conditions
			Min	Typ	Max		
Input Offset Voltage (Note 9,10)	V_{IO}	25°C	-	2	7	mV	E_K=-1.4V
		Full range	-	-	15		VCC=5 to 36V, E_K=-1.4V
Input Offset Current (Note 9,10)	I_{IO}	25°C	-	5	50	nA	E_K=-1.4V
		Full range	-	-	200		
Input Bias Current (Note 10,11)	I_B	25°C	-	50	250	nA	E_K=-1.4V
		Full range	-	-	500		
Input Common-mode Voltage Range	V_{ICM}	25°C	0	-	VCC-1.5	V	-
Large Signal Voltage Gain	A_V	25°C	88	100	-	dB	VCC=15V, E_K=-1.4 to -11.4V R_L=15kΩ, V_{RL}=15V
		Full range	74	-	-		
Supply Current(Note 10)	I_{CC}	25°C	-	0.6	1	mA	OUT=open
		Full range	-	-	2.5		OUT=open, VCC=36V
Output Sink Current (Note 12)	I_{SINK}	25°C	6	16	-	mA	+IN=0V, -IN=1V OUT=1.5V
Output Saturation Voltage(Note 10) (Maximum Output Voltage Low)	V_{OL}	25°C	-	150	400	mV	+IN=0V, -IN= 1V I_{SINK}=4mA
		Full range	-	-	700		
Output Leakage Current(Note 10) (High level output current)	I_{LEAK}	25°C	-	0.1	-	μA	+IN=1V, -IN=0V OUT=5V
		Full range	-	-	1		+IN=1V, -IN=0V OUT=36V
Response Time	t_{RE}	25°C	-	1.3	-	μs	R_L=5.1kΩ, V_{RL}=5V V_{IN}=100mV_{P-P}, overdrive=5mV
			-	0.4	-		R_L=5.1kΩ, V_{RL}=5V, V_{IN}=TTL Logic Swing, V_{REF}=1.4V

(Note 9) Absolute value
(Note 10) Full range T_A=-40°C to +125°C
(Note 11) Current Direction: Since first input stage is composed with PNP transistor, input bias current flows out of IC.
(Note 12) Under high temperatures, please consider the power dissipation when selecting the output current.
When the output terminal is continuously shorted the output current reduces the internal temperature by flushing.

© 2012 ROHM Co., Ltd. All rights reserved.

chanhvinh.com

○BA2901Yxx-M (Unless otherwise specified VCC=+5V, VEE=0V)

Parameter	Symbol	Temperature range	Limits			Unit	Conditions
			Min	Typ	Max		
Input Offset Voltage (Note13,14)	V_{IO}	25°C	-	2	7	mV	E_K=-1.4V
		Full range	-	-	15		VCC=5 to 36V, E_K=-1.4V
Input Offset Current (Note13,14)	I_{IO}	25°C	-	5	50	nA	E_K=-1.4V
		Full range	-	-	200		
Input Bias Current (Note14,15)	I_B	25°C	-	50	250	nA	E_K=-1.4V
		Full range	-	-	500		
Input Common-mode Voltage Range	V_{ICM}	25°C	0	-	VCC-1.5	V	-
Large Signal Voltage Gain	A_V	25°C	88	100	-	dB	VCC=15V, E_K=-1.4 to -11.4V R_L=15kΩ, V_{RL}=15V
		Full range	74	-	-		
Supply Current(Note14)	I_{CC}	25°C	-	0.8	2	mA	OUT=open
		Full range	-	-	2.5		OUT=open, VCC=36V
Output Sink Current (Note16)	I_{SINK}	25°C	6	16	-	mA	+IN=0V, -IN=1V OUT=1.5V
Output Saturation Voltage(Note14) (Maximum Output Voltage Low)	V_{OL}	25°C	-	150	400	mV	+IN=0V, -IN= 1V I_{SINK}=4mA
		Full range	-	-	700		
Output Leakage Current(Note14) (High level output current)	I_{LEAK}	25°C	-	0.1	-	μA	+IN=1V, -IN=0V OUT=5V
		Full range	-	-	1		+IN=1V, -IN=0V OUT=36V
Response Time	t_{RE}	25°C	-	1.3	-	μs	R_L=5.1kΩ, V_{RL}=5V V_{IN}=100mV_{P-P}, overdrive=5mV
			-	0.4	-		R_L=5.1kΩ, V_{RL}=5V, V_{IN}=TTL Logic Swing, V_{REF}=1.4V

(Note 13) Absolute value
(Note 14) Full range T_A=-40°C to +125°C
(Note 15) Current Direction: Since first input stage is composed with PNP transistor, input bias current flows out of IC.
(Note 16) Under high temperatures, please consider the power dissipation when selecting the output current.
When the output terminal is continuously shorted the output current reduces the internal temperature by flushing.

© 2012 ROHM Co., Ltd. All rights reserved.

chanhvinh.com

Description of electrical characteristics

Described below are descriptions of the relevant electrical terms used in this datasheet. Items and symbols used are also shown. Note that item name and symbol and their meaning may differ from those on another manufacturer's document or general document.

1. Absolute maximum ratings

Absolute maximum rating items indicate the condition which must not be exceeded. Application of voltage in excess of absolute maximum rating or use out of absolute maximum rated temperature environment may cause deterioration of characteristics.

(1) Supply Voltage (VCC/VEE)
Indicates the maximum voltage that can be applied between the positive power supply terminal and negative power supply terminal without deterioration or destruction of characteristics of internal circuit.

(2) Differential Input Voltage (V_{ID})
Indicates the maximum voltage that can be applied between non-inverting and inverting terminals without damaging the IC.

(3) Input Common-mode Voltage Range (V_{ICM})
Indicates the maximum voltage that can be applied to the non-inverting and inverting terminals without deterioration or destruction of electrical characteristics. Input common-mode voltage range of the maximum ratings does not assure normal operation of IC. For normal operation, use the IC within the input common-mode voltage range characteristics.

(4) Operating and Storage Temperature Ranges (T_{opr}, T_{stg})
The operating temperature range indicates the temperature range within which the IC can operate. The higher the ambient temperature, the lower the power consumption of the IC. The storage temperature range denotes the range of temperatures the IC can be stored under without causing excessive deterioration of the electrical characteristics.

(5) Power Dissipation (P_D)
Indicates the power that can be consumed by the IC when mounted on a specific board at the ambient temperature 25°C (normal temperature). As for package product, P_D is determined by the temperature that can be permitted by the IC in the package (maximum junction temperature) and the thermal resistance of the package.

2. Electrical characteristics

(1) Input Offset Voltage (V_{IO})
Indicates the voltage difference between non-inverting terminal and inverting terminals. It can be translated into the input voltage difference required for setting the output voltage at 0 V.

(2) Input Offset Current (I_{IO})
Indicates the difference of input bias current between the non-inverting and inverting terminals.

(3) Input Bias Current (I_B)
Indicates the current that flows into or out of the input terminal. It is defined by the average of input bias currents at the non-inverting and inverting terminals.

(4) Input Common-mode Voltage Range (V_{ICM})
Indicates the input voltage range where IC normally operates.

(5) Large Signal Voltage Gain (A_V)
Indicates the amplifying rate (gain) of output voltage against the voltage difference between non-inverting terminal and inverting terminal. It is normally the amplifying rate (gain) with reference to DC voltage.
A_V = (Output voltage) / (Differential Input voltage)

(6) Supply Current (I_{CC})
Indicates the current that flows within the IC under specified no-load conditions.

(7) Output Sink Current (I_{SINK})
Denotes the maximum current that can be output under specific output conditions.

(8) Output Saturation Voltage, Low Level Output Voltage (V_{OL})
Signifies the voltage range that can be output under specific output conditions.

(9) Output Leakage Current, High Level Output Current (I_{LEAK})
Indicates the current that flows into the IC under specific input and output conditions.

(10) Response Time (t_{RE})
Response time indicates the delay time between the input and output signal is determined by the time difference from the fifty percent of input signal swing to the fifty percent of output signal swing.

© 2012 ROHM Co., Ltd. All rights reserved.

chanhvinh.com

Typical Performance Curves

○BA2903Yxxx-M

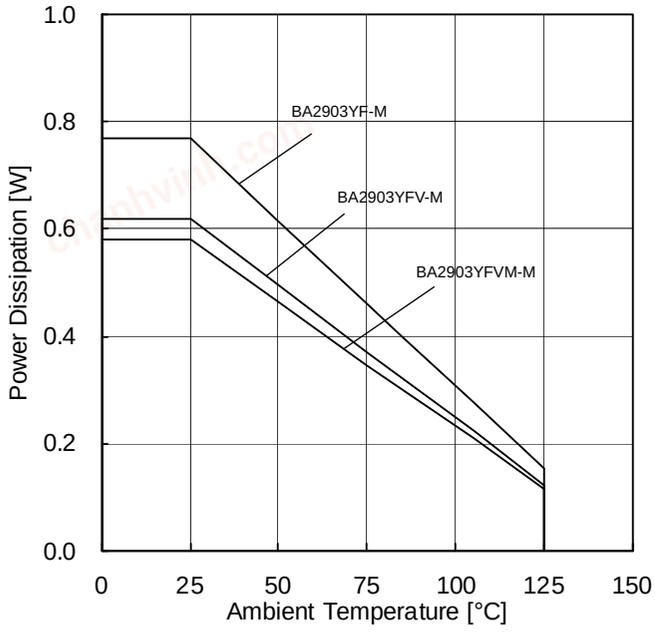

Figure 2.
Power Dissipation vs Ambient Temperature
(Derating Curve)

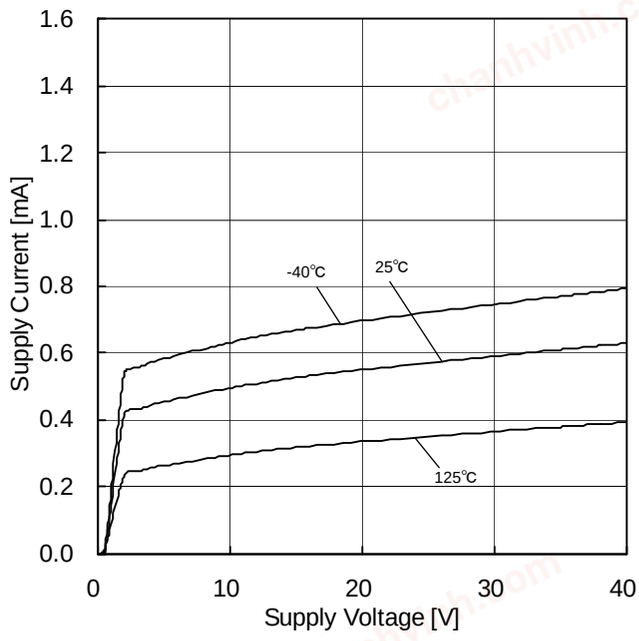

Figure 3.
Supply Current vs Supply Voltage

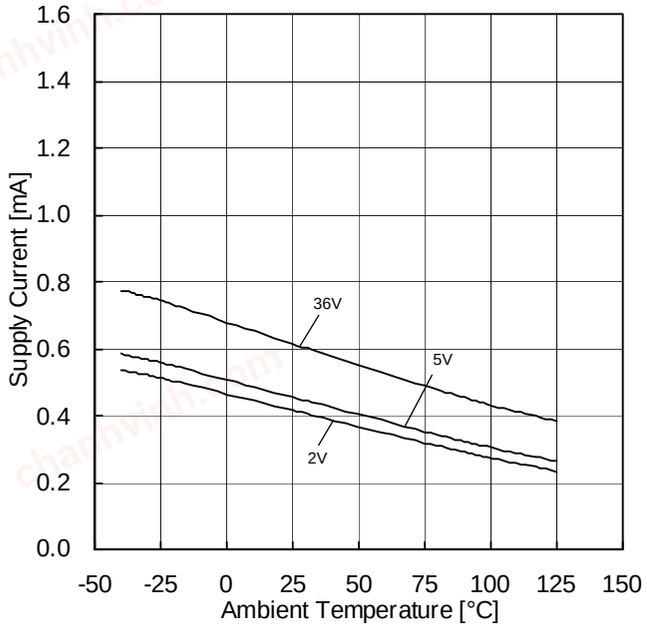

Figure 4.
Supply Current vs Ambient Temperature

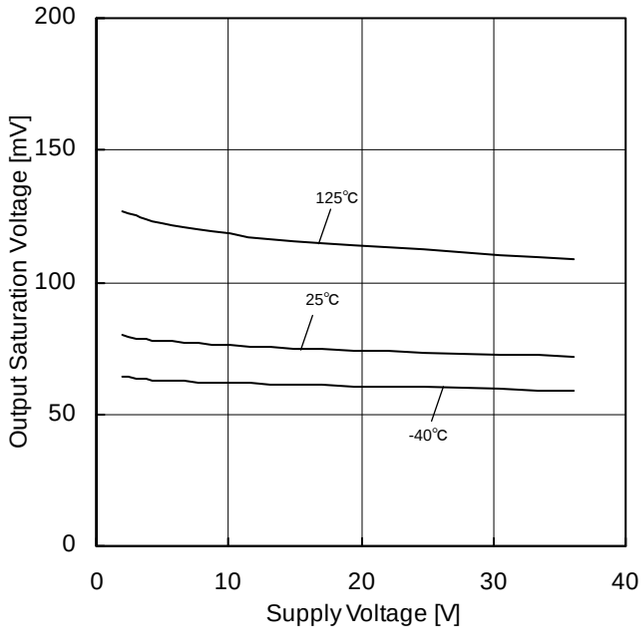

Figure 5.
Output Saturation Voltage vs Supply Voltage
(I_{SINK}=4mA)

(*)The above characteristics are measurements of typical sample, they are not guaranteed.

© 2012 ROHM Co., Ltd. All rights reserved.

chanhvinh.com

Typical Performance Curves - continued

○BA2903Yxxx-M

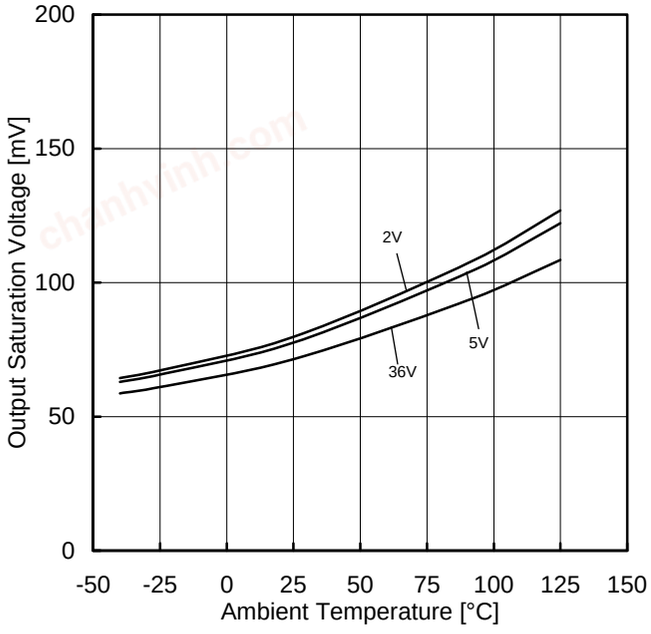

Figure 6.
Output Saturation Voltage vs Ambient Temperature
(I_{SINK}=4mA)

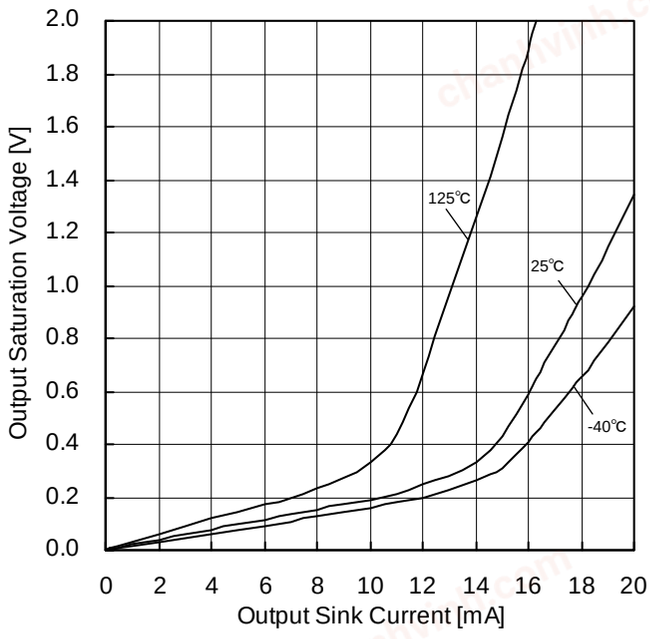

Figure 7.
Output Saturation Voltage vs
Output Sink Current
(VCC=5V)

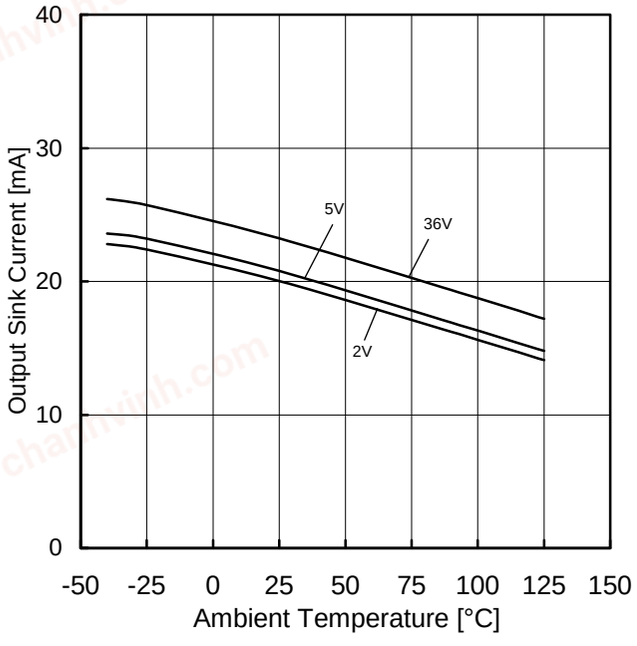

Figure 8.
Output Sink Current vs Ambient Temperature
(OUT=1.5V)

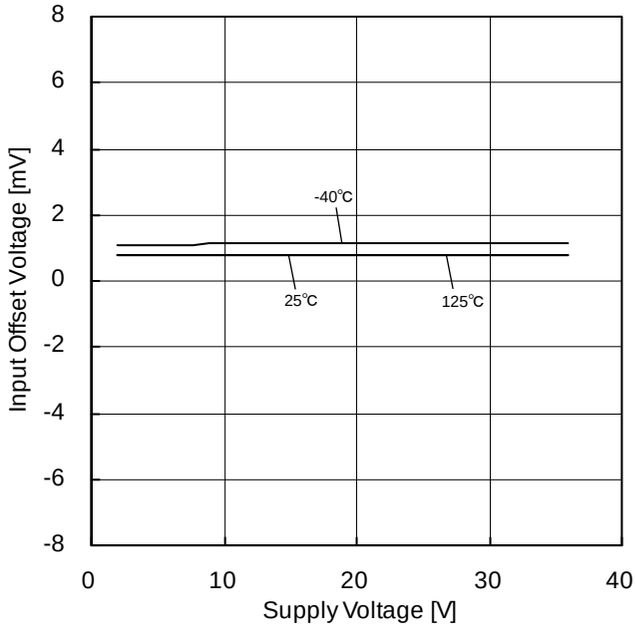

Figure 9.
Input Offset Voltage vs Supply Voltage

(*)The above characteristics are measurements of typical sample, they are not guaranteed.

© 2012 ROHM Co., Ltd. All rights reserved.

chanhvinh.com

Typical Performance Curves - continued

○BA2903Yxxx-M

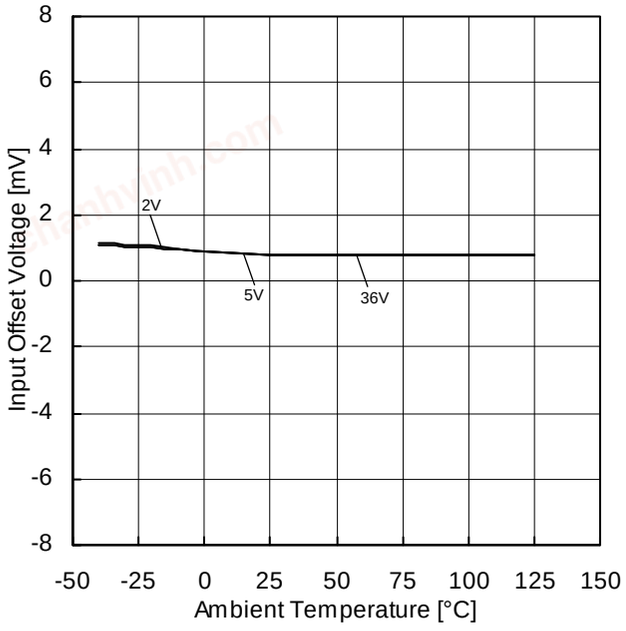

Figure 10.
Input Offset Voltage vs Ambient Temperature

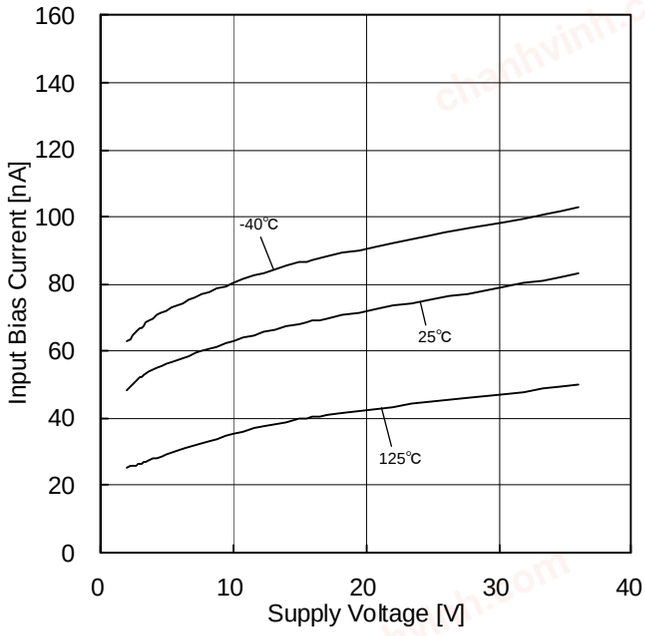

Figure 11.
Input Bias Current vs Supply Voltage

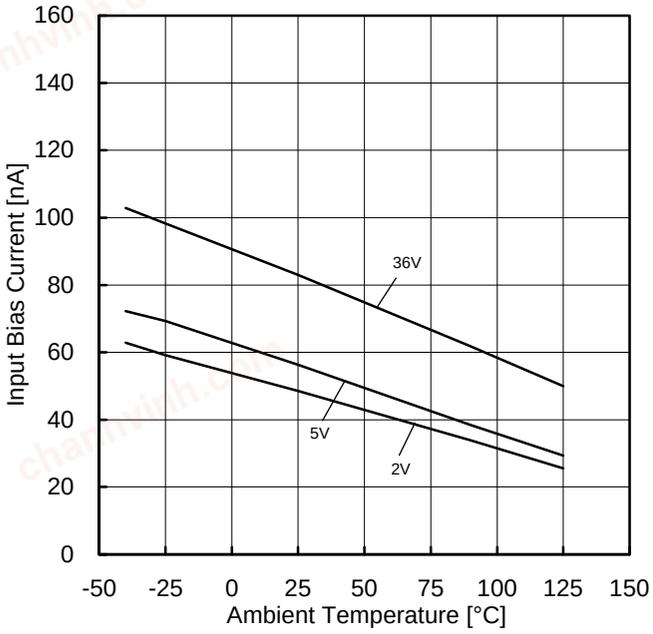

Figure 12.
Input Bias Current vs Ambient Temperature

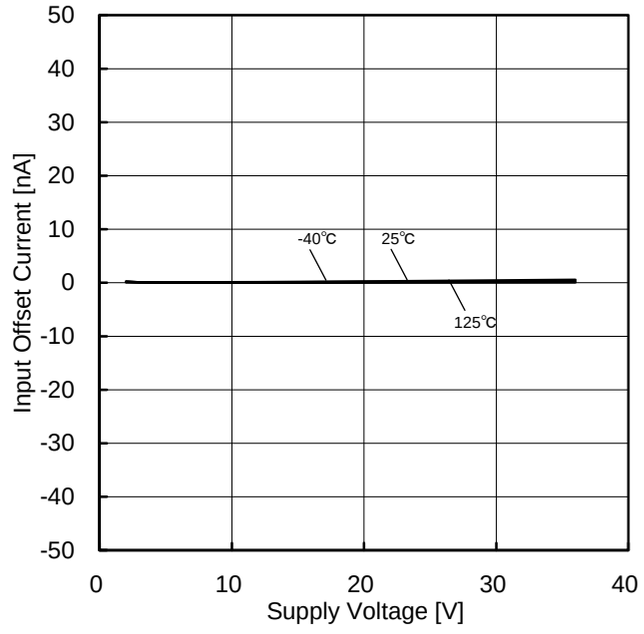

Figure 13.
Input Offset Current vs Supply Voltage

(*)The above characteristics are measurements of typical sample, they are not guaranteed.

© 2012 ROHM Co., Ltd. All rights reserved.

chanhvinh.com

Typical Performance Curves - continued

○BA2903Yxxx-M

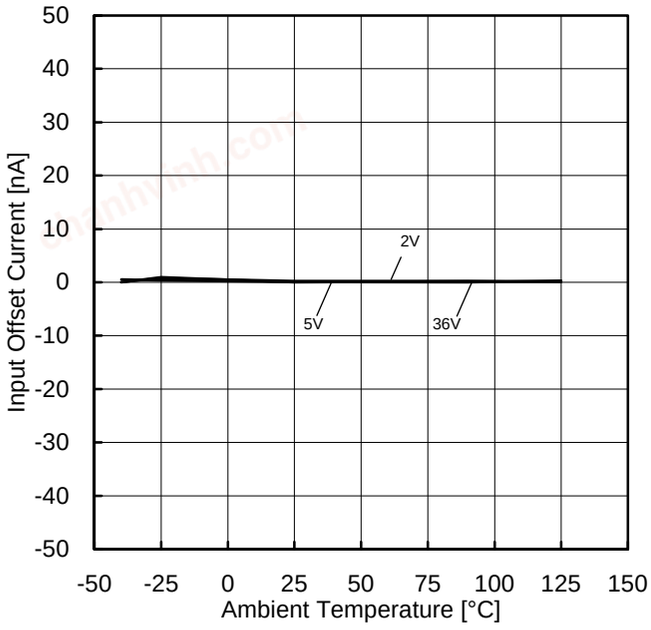

Figure 14.
Input Offset Current vs Ambient Temperature

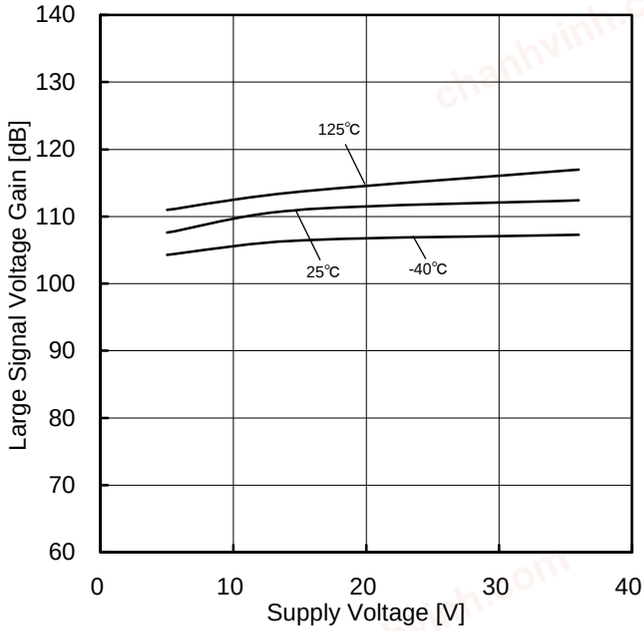

Figure 15.
Large Signal Voltage Gain
vs Supply Voltage

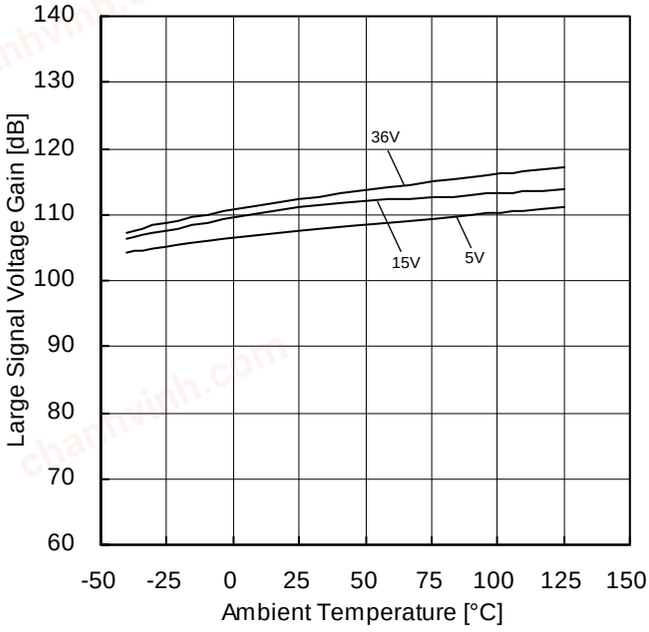

Figure 16.
Large Signal Voltage Gain
vs Ambient Temperature

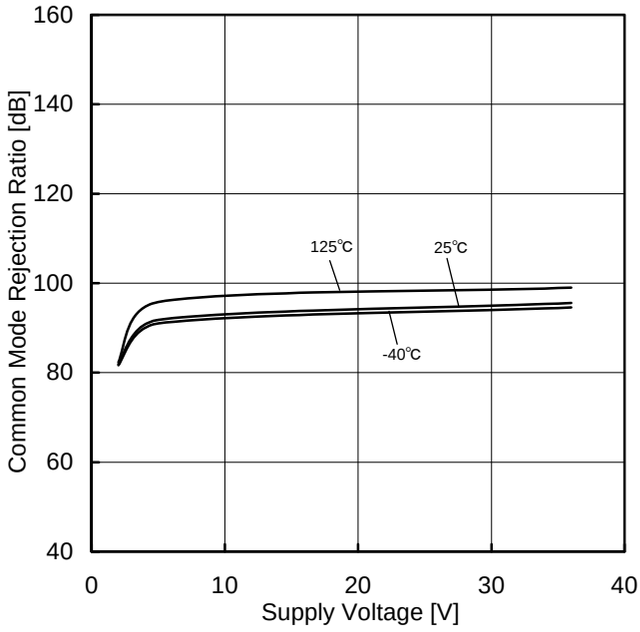

Figure 17.
Common Mode Rejection Ratio
vs Supply Voltage

(*)The above characteristics are measurements of typical sample, they are not guaranteed.

© 2012 ROHM Co., Ltd. All rights reserved.

chanhvinh.com

Typical Performance Curves - continued

○BA2903Yxxx-M

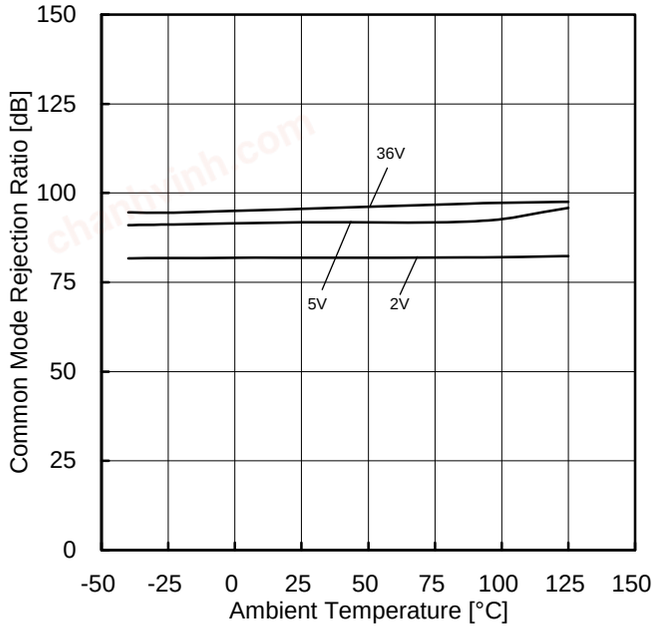

Figure 18.
Common Mode Rejection Ratio
vs Ambient Temperature

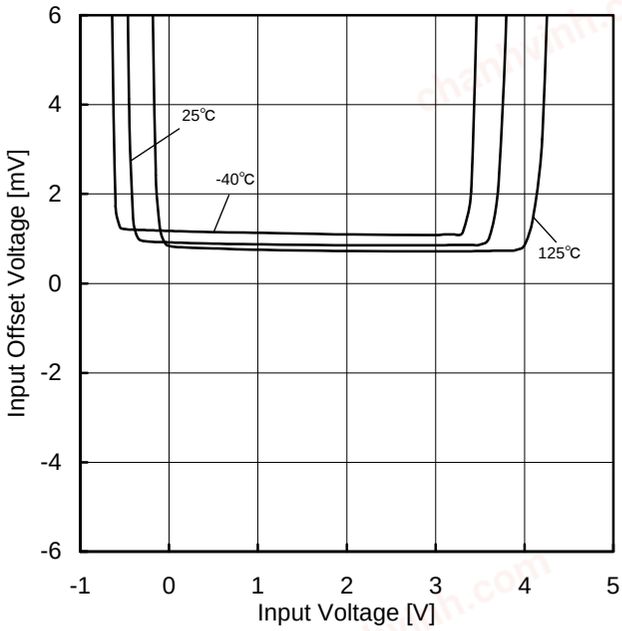

Figure 19.
Input Offset Voltage - Input Voltage
(VCC=5V)

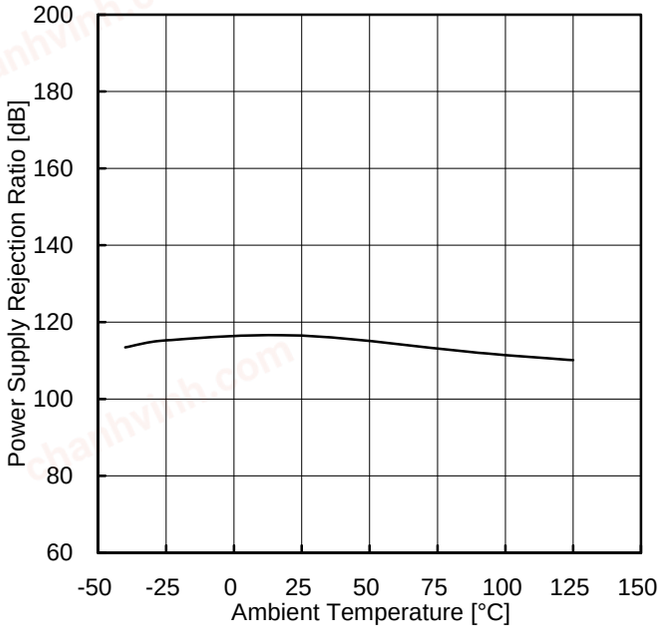

Figure 20.
Power Supply Rejection Ratio
vs Ambient Temperature

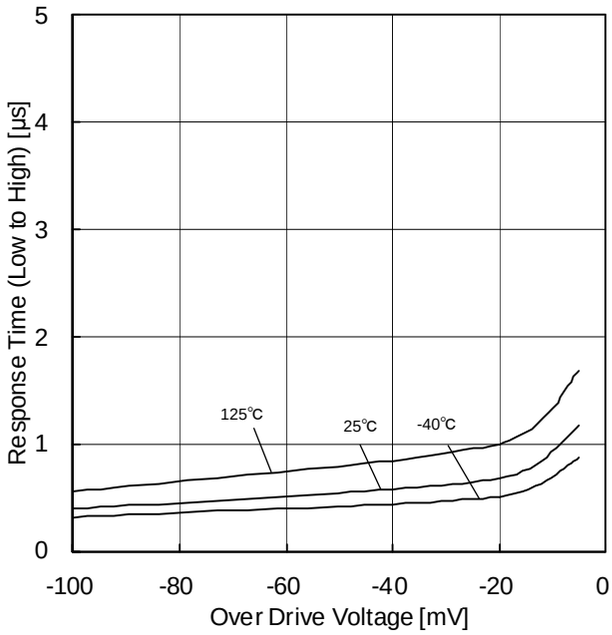

Figure 21.
Response Time (Low to High)
vs Over Drive Voltage
(VCC=5V, V_{RL}=5V, R_L=5.1kΩ)

(*)The above characteristics are measurements of typical sample, they are not guaranteed.

© 2012 ROHM Co., Ltd. All rights reserved.

chanhvinh.com

Typical Performance Curves - continued

○BA2903Yxxx-M

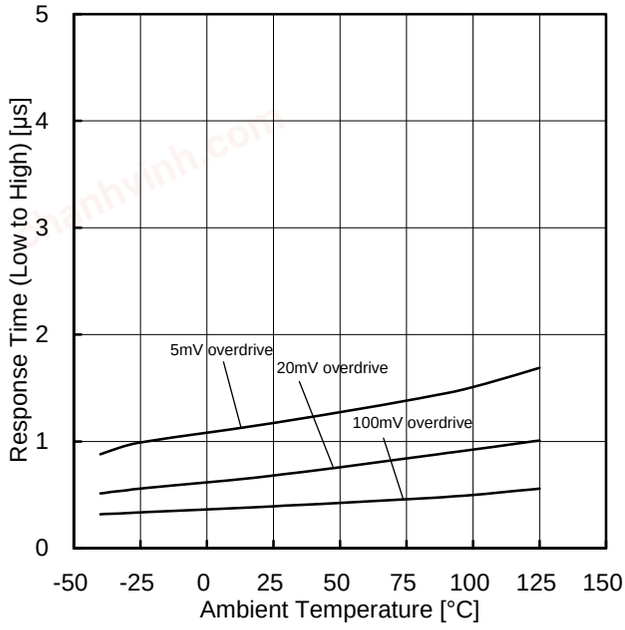

Figure 22.
Response Time (Low to High)
vs Ambient Temperature
(VCC=5V, V_{RL}=5V, R_L=5.1kΩ)

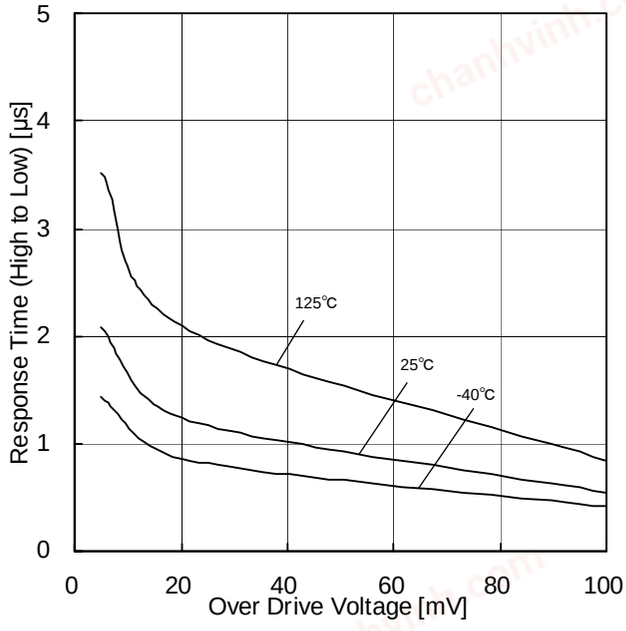

Figure 23.
Response Time (High to Low)
vs Over Drive Voltage
(VCC=5V, V_{RL}=5V, R_L=5.1kΩ)

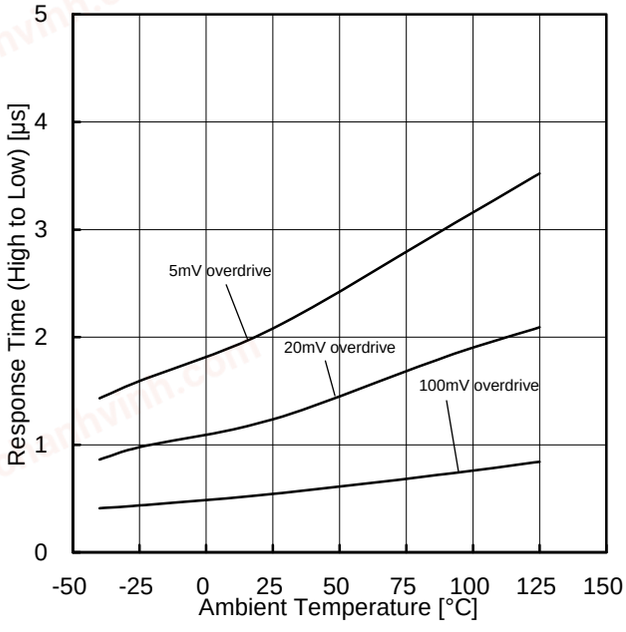

Figure 24.
Response Time (High to Low)
vs Ambient Temperature
(VCC=5V, V_{RL}=5V, R_L=5.1kΩ)

(*)The above characteristics are measurements of typical sample, they are not guaranteed.

© 2012 ROHM Co., Ltd. All rights reserved.

chanhvinh.com

Typical Performance Curves - continued

○BA2901Yxx-M

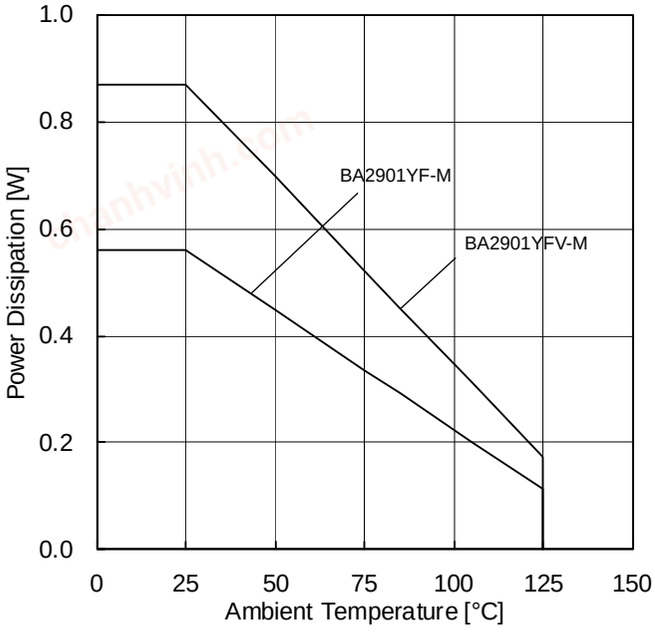

Figure 25.
Power Dissipation vs Ambient Temperature
(Derating Curve)

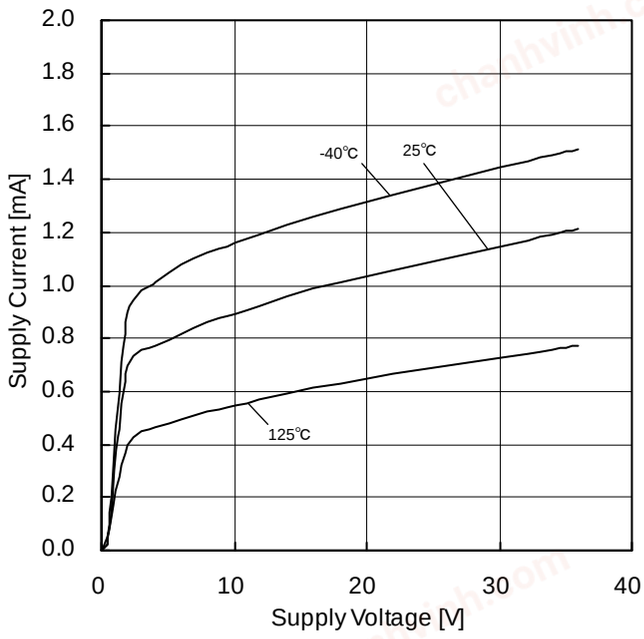

Figure 26.
Supply Current vs Supply Voltage

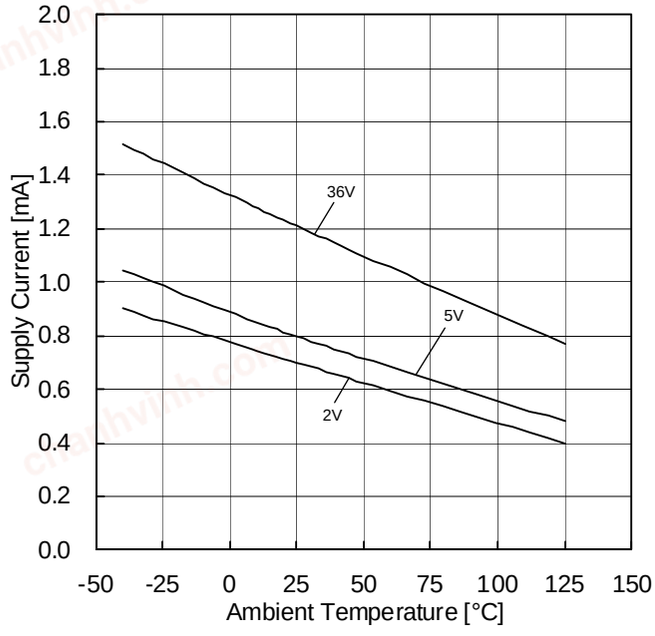

Figure 27.
Supply Current vs Ambient Temperature

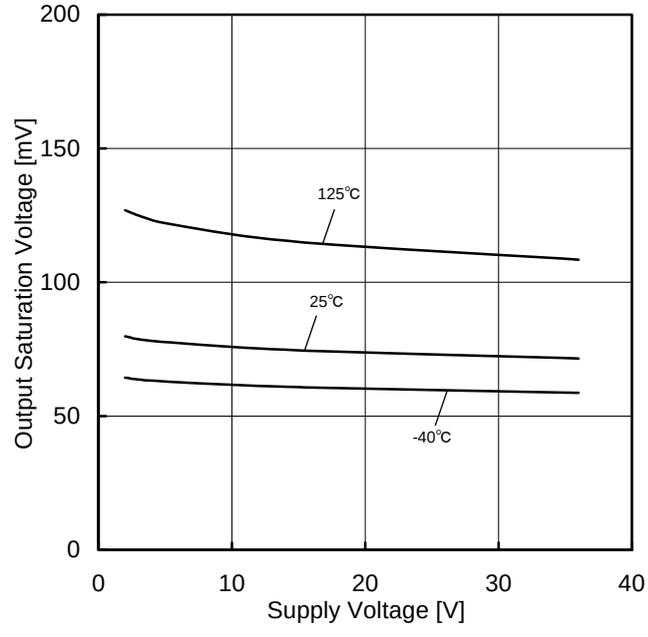

Figure 28.
Output Saturation Voltage vs Supply Voltage
(I_{SINK}=4mA)

(*)The above characteristics are measurements of typical sample, they are not guaranteed.

© 2012 ROHM Co., Ltd. All rights reserved.

chanhvinh.com

Typical Performance Curves - continued

○BA2901Yxx-M

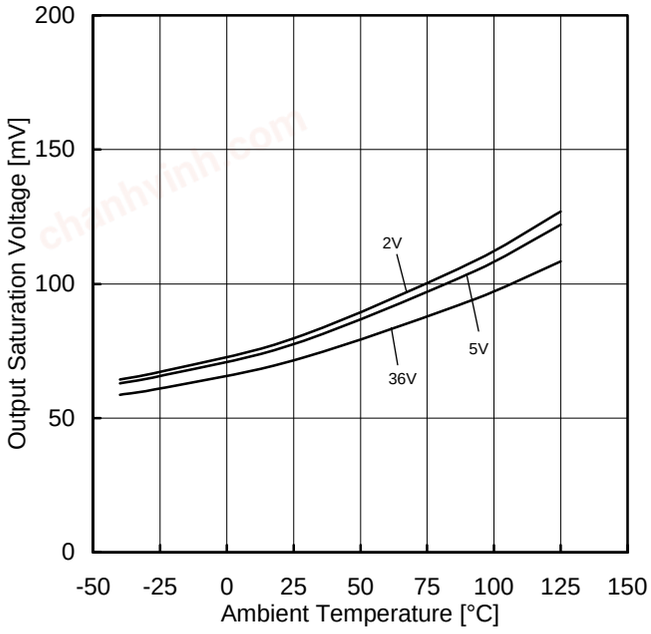

Figure 29.
Output Saturation Voltage vs Ambient Temperature
(I_{SINK}=4mA)

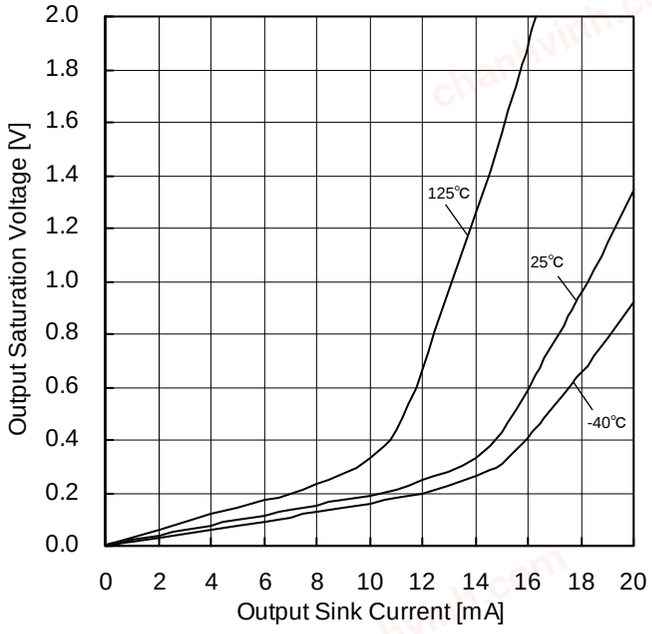

Figure 30.
Output Saturation Voltage vs
Output Sink Current
(VCC=5V)

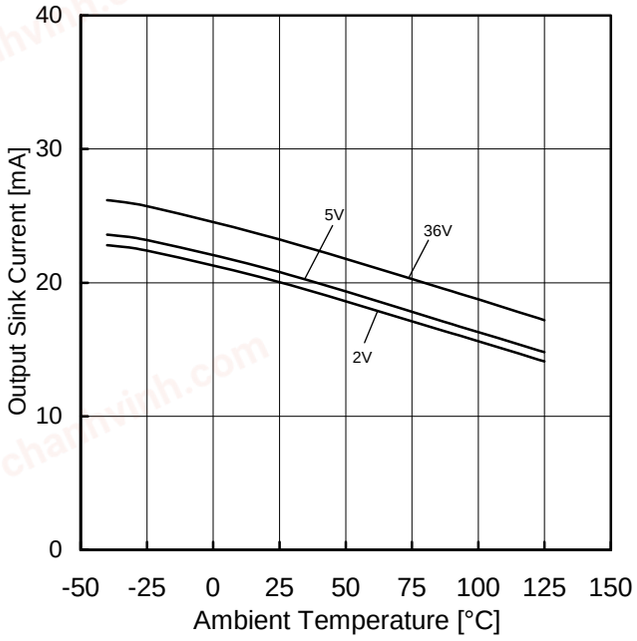

Figure 31.
Output Sink Current vs Ambient Temperature
(OUT=1.5V)

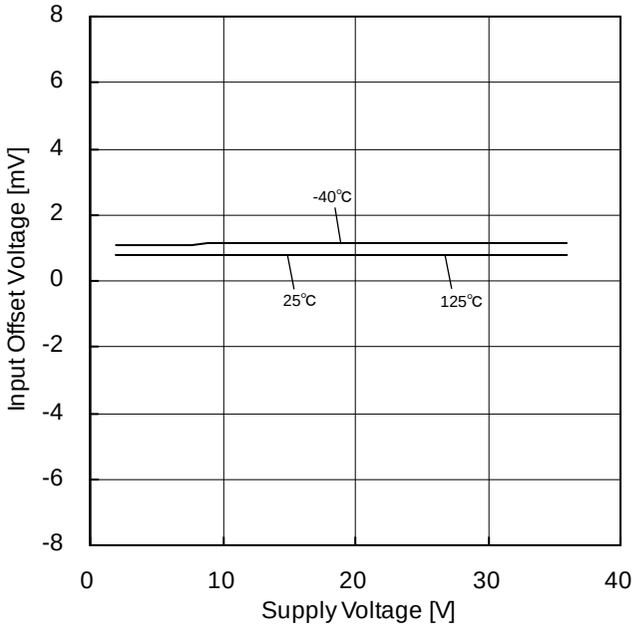

Figure 32.
Input Offset Voltage vs Supply Voltage

(*)The above characteristics are measurements of typical sample, they are not guaranteed.

© 2012 ROHM Co., Ltd. All rights reserved.

chanhvinh.com

Typical Performance Curves - continued

○BA2901Yxx-M

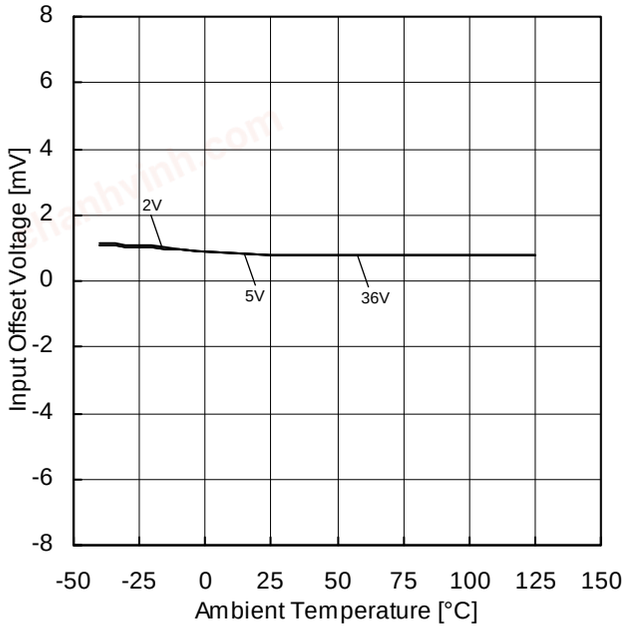

Figure 33.
Input Offset Voltage vs Ambient Temperature

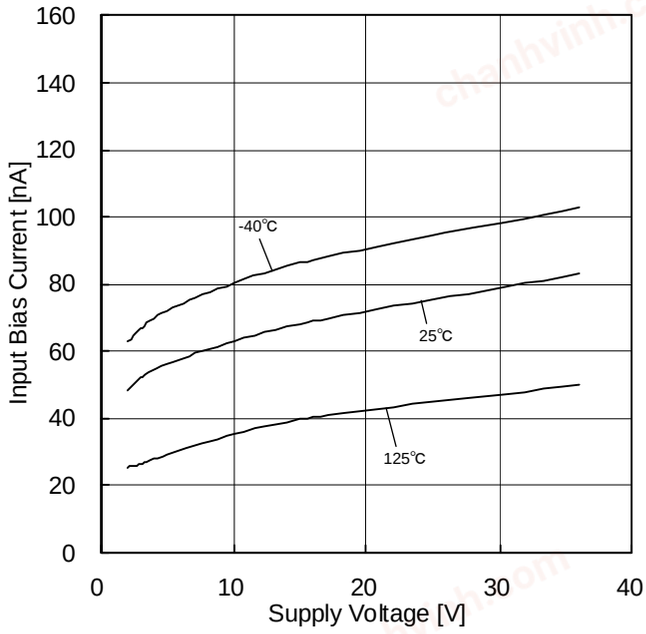

Figure 34.
Input Bias Current vs Supply Voltage

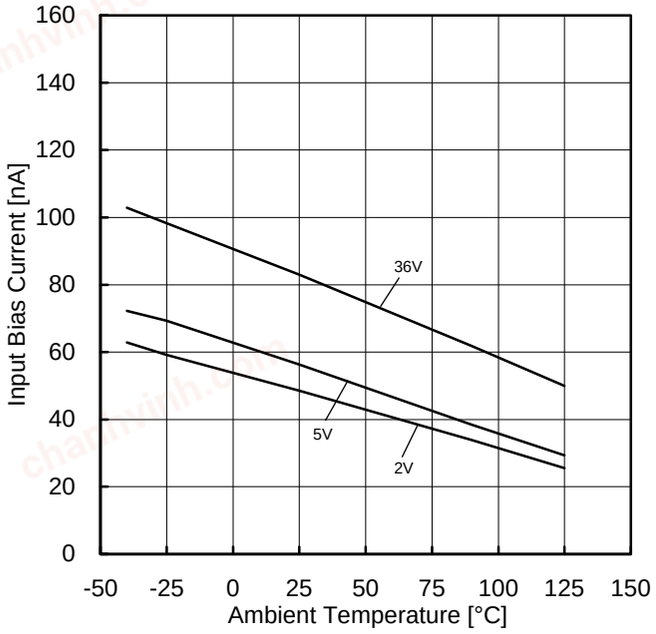

Figure 35.
Input Bias Current vs Ambient Temperature

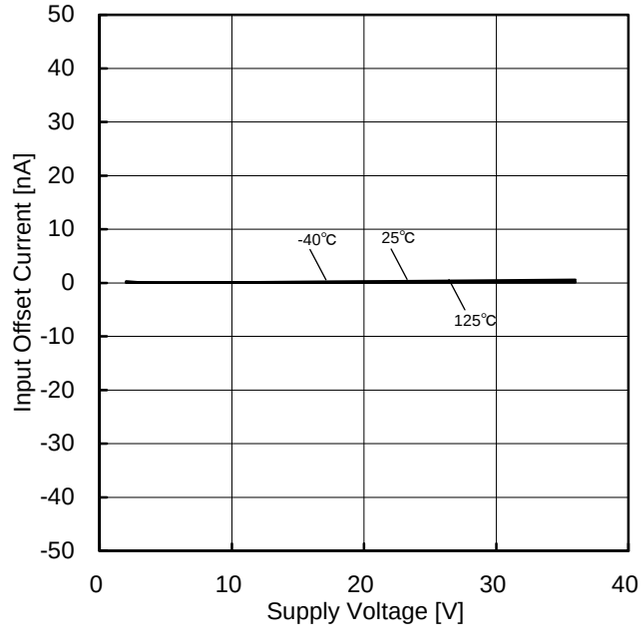

Figure 36.
Input Offset Current vs Supply Voltage

(*)The above characteristics are measurements of typical sample, they are not guaranteed.

© 2012 ROHM Co., Ltd. All rights reserved.

chanhvinh.com

Typical Performance Curves - continued

○BA2901Yxx-M

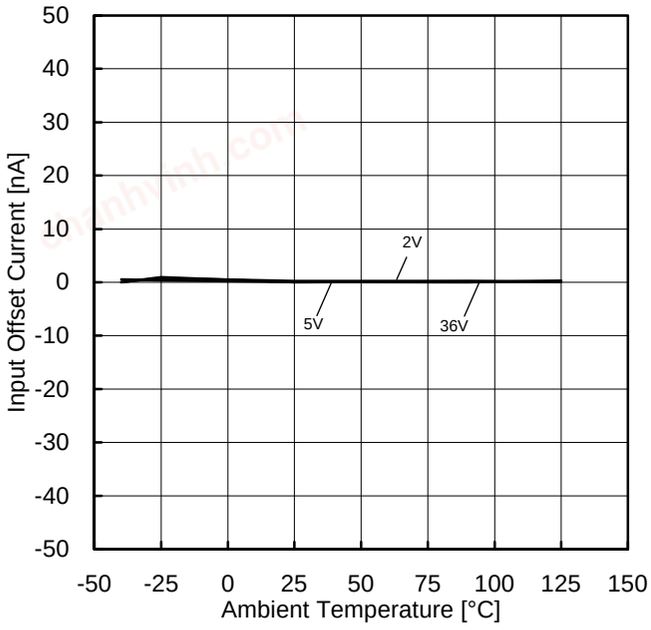

Figure 37.
Input Offset Current vs Ambient Temperature

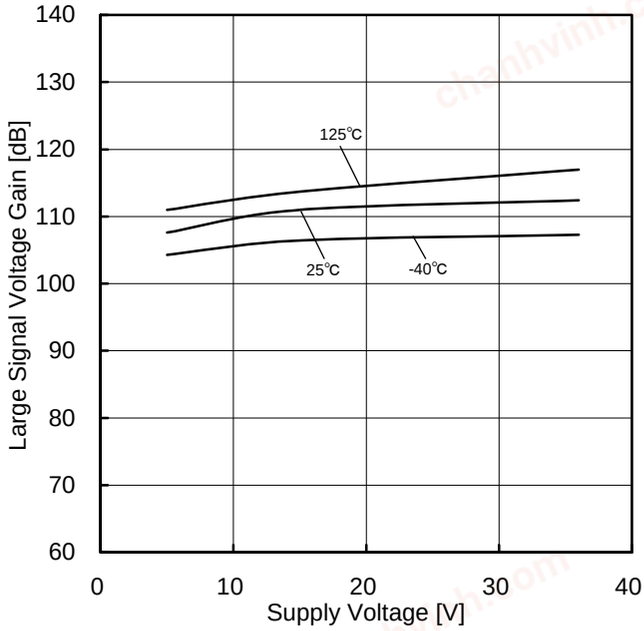

Figure 38.
Large Signal Voltage Gain
vs Supply Voltage

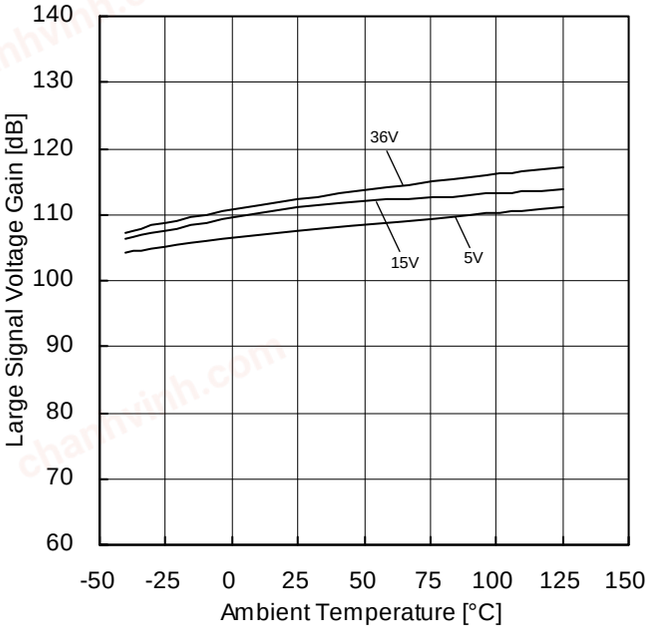

Figure 39.
Large Signal Voltage Gain
vs Ambient Temperature

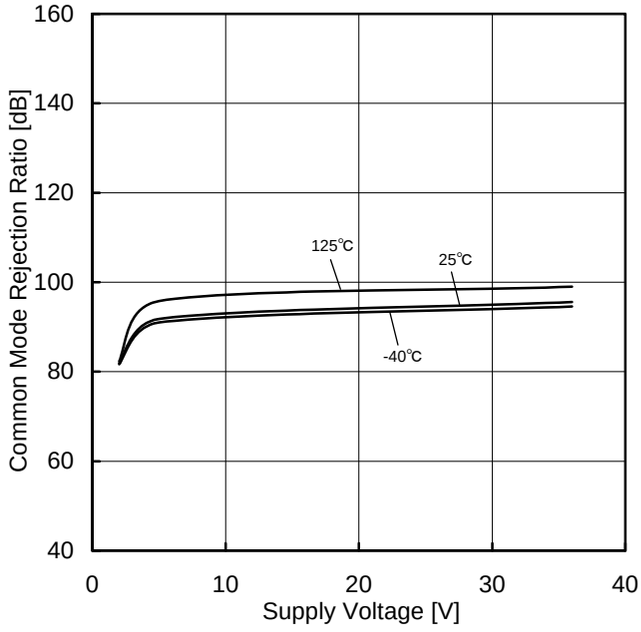

Figure 40.
Common Mode Rejection Ratio
vs Supply Voltage

(*)The above characteristics are measurements of typical sample, they are not guaranteed.

© 2012 ROHM Co., Ltd. All rights reserved.

chanhvinh.com

Typical Performance Curves - continued

○BA2901Yxx-M

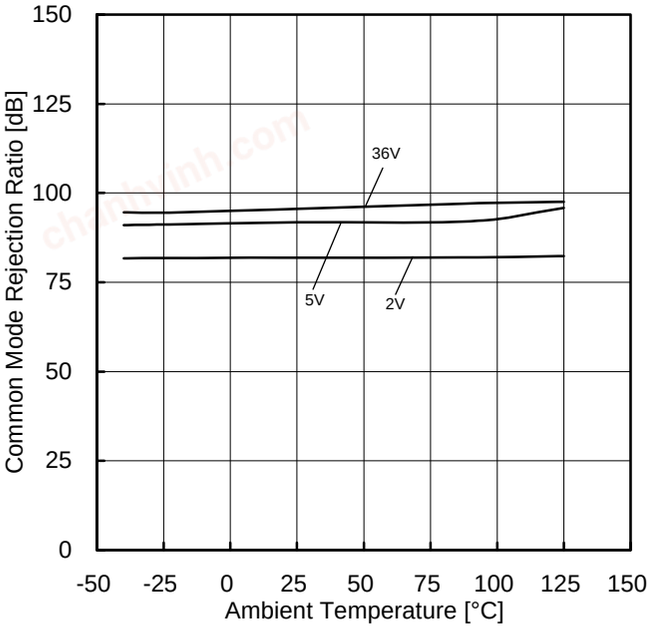

Figure 41.
Common Mode Rejection Ratio
vs Ambient Temperature

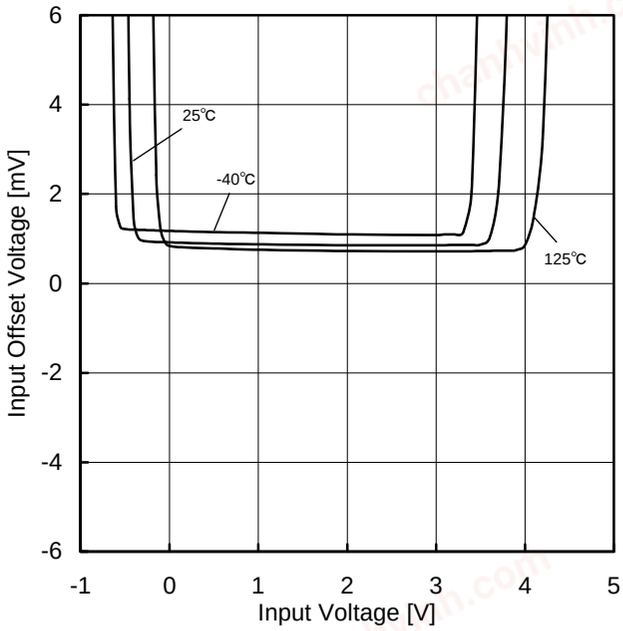

Figure 42.
Input Offset Voltage - Input Voltage
(VCC=5V)

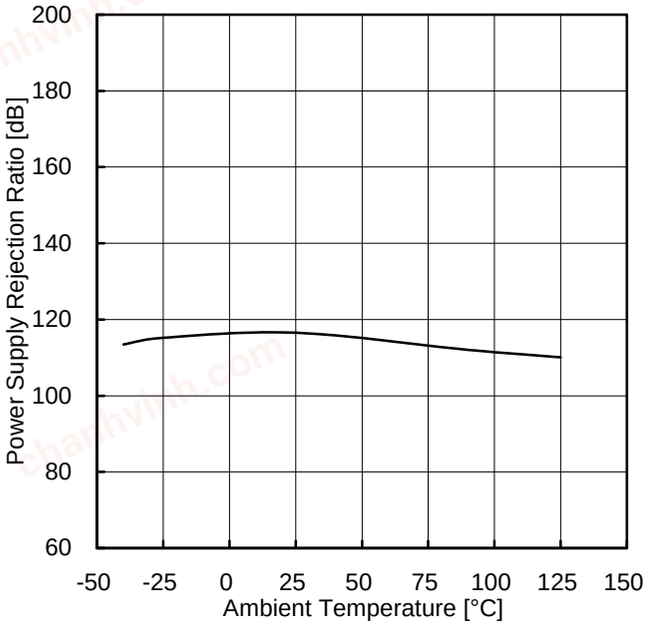

Figure 43.
Power Supply Rejection Ratio
vs Ambient Temperature

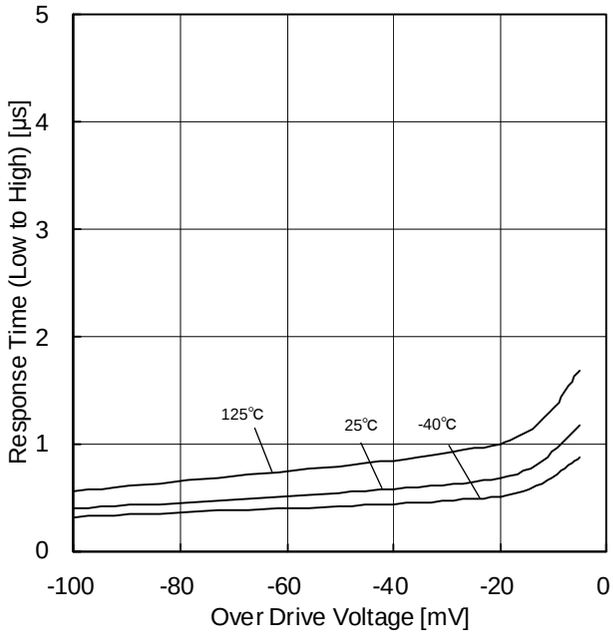

Figure 44.
Response Time (Low to High)
vs Over Drive Voltage
(VCC=5V, V_{RL}=5V, R_L=5.1kΩ)

(*)The above characteristics are measurements of typical sample, they are not guaranteed.

© 2012 ROHM Co., Ltd. All rights reserved.

chanhvinh.com

Typical Performance Curves - continued

○BA2901Yxx-M

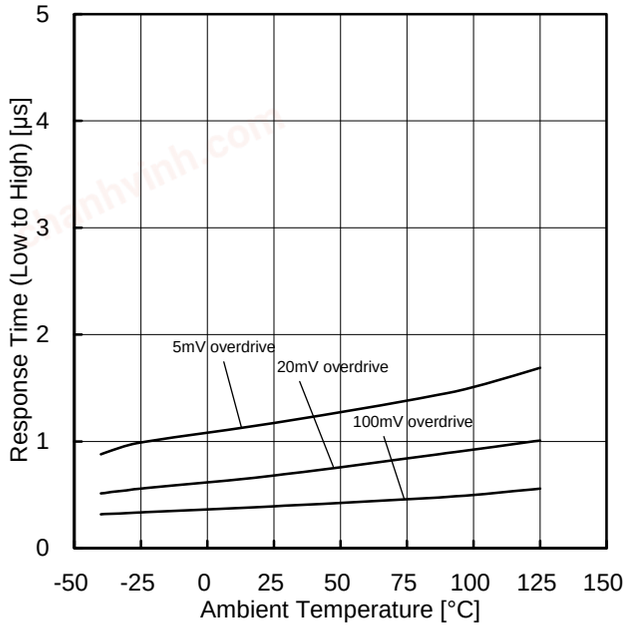

Figure 45.
Response Time (Low to High)
vs Ambient Temperature
(VCC=5V, V_{RL}=5V, R_L=5.1kΩ)

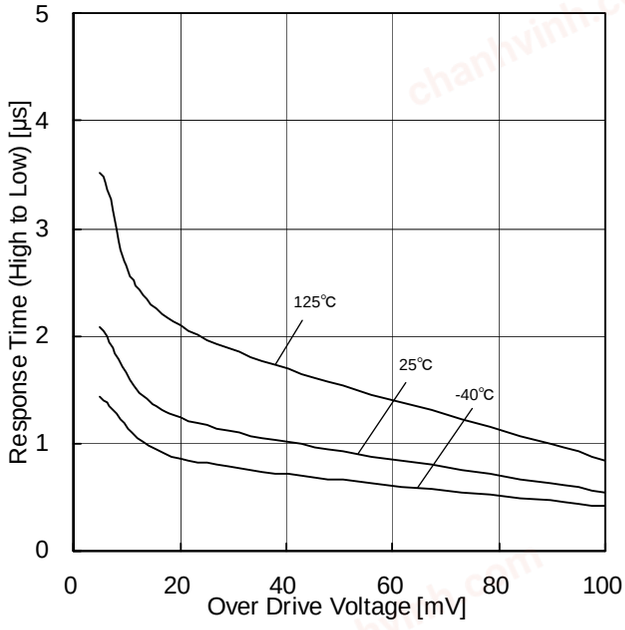

Figure 46.
Response Time (High to Low)
vs Over Drive Voltage
(VCC=5V, V_{RL}=5V, R_L=5.1kΩ)

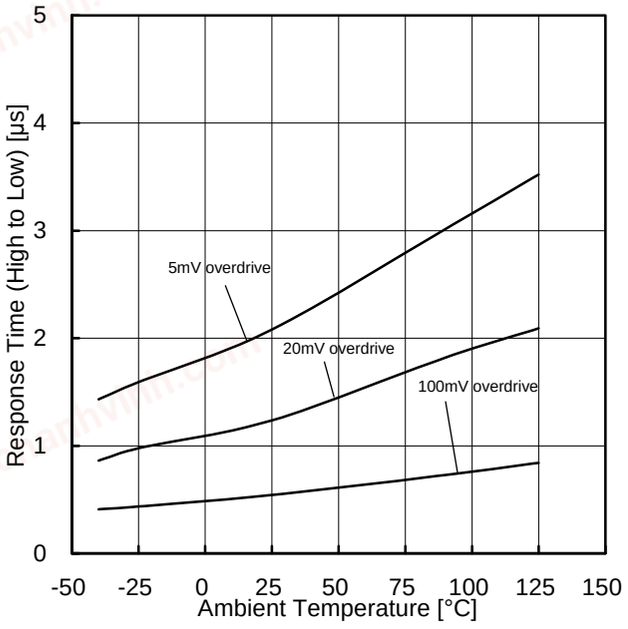

Figure 47.
Response Time (High to Low)
vs Ambient Temperature
(VCC=5V, V_{RL}=5V, R_L=5.1kΩ)

(*)The above characteristics are measurements of typical sample, they are not guaranteed.

© 2012 ROHM Co., Ltd. All rights reserved.

chanhvinh.com

Power Dissipation

Power dissipation (total loss) indicates the power that the IC can consume at T_A=25°C (normal temperature). As the IC consumes power, it heats up, causing its temperature to be higher than the ambient temperature. The allowable temperature that the IC can accept is limited. This depends on the circuit configuration, manufacturing process, and consumable power.

Power dissipation is determined by the allowable temperature within the IC (maximum junction temperature) and the thermal resistance of the package used (heat dissipation capability). Maximum junction temperature is typically equal to the maximum storage temperature. The heat generated through the consumption of power by the IC radiates from the mold resin or lead frame of the package. Thermal resistance, represented by the symbol θ_{JA}°C/W, indicates this heat dissipation capability. Similarly, the temperature of an IC inside its package can be estimated by thermal resistance.

Figure 48(a) shows the model of the thermal resistance of the package. The equation below shows how to compute for the Thermal resistance (θ_{JA}), given the ambient temperature (T_A), maximum junction temperature (T_{Jmax}), and power dissipation (P_D).

$$\theta_{JA} = (T_{Jmax}-T_A) / P_D \quad °C/W$$

The Derating curve in Figure 48(b) indicates the power that the IC can consume with reference to ambient temperature. Power consumption of the IC begins to attenuate at certain temperatures. This gradient is determined by Thermal resistance (θ_{JA}), which depends on the chip size, power consumption, package, ambient temperature, package condition, wind velocity, etc. This may also vary even when the same of package is used. Thermal reduction curve indicates a reference value measured at a specified condition. Figure 48(c) and (d) shows an example of the derating curve for BA2903Yxxx-M, BA2901Yxx-M.

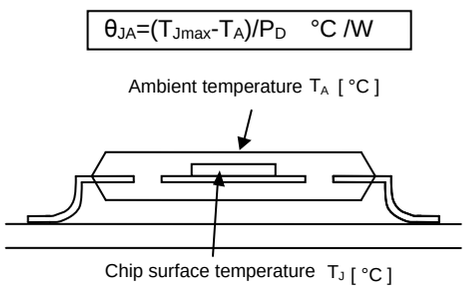

(a) Thermal resistance

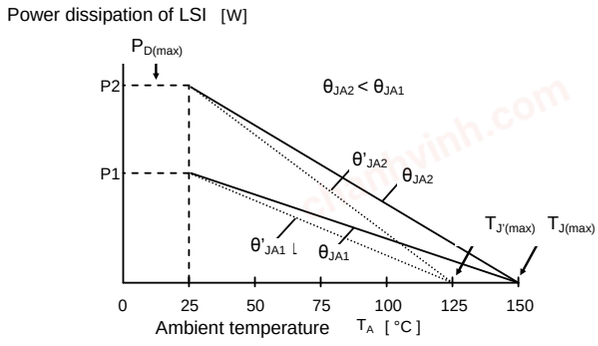

(b) Derating curve

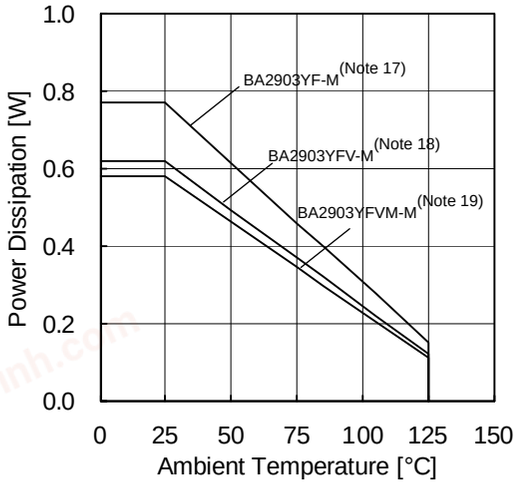

(c) BA2903Y

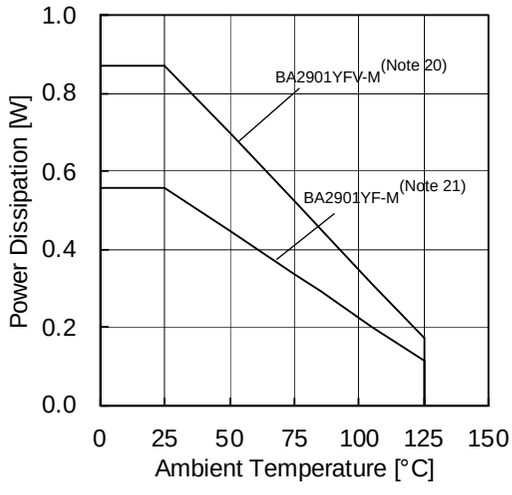

(d) BA2901Y

(Note17)	(Note18)	(Note19)	(Note20)	(Note21)	UNIT
6.2	5.0	4.7	7.0	4.5	mW/°C

When using the unit above T_A=25°C, subtract the value above per Celsius degree.
Permissible dissipation is the value when FR4 glass epoxy board 70mm×70mm×1.6mm (copper foil area less than 3%) is mounted.

Figure 48. Thermal resistance and derating

© 2012 ROHM Co., Ltd. All rights reserved.

chanhvinh.com

Application Information

NULL method condition for Test circuit1

VCC,VEE,E_K,V_{ICM} Unit : V

Parameter	V_F	S1	S2	S3	VCC	VEE	E_K	V_{ICM}	Calculation
Input Offset Voltage	V_{F1}	ON	ON	ON	5 to 36	0	-1.4	0	1
Input Offset Current	V_{F2}	OFF	OFF	ON	5	0	-1.4	0	2
Input Bias Current	V_{F3}	OFF	ON	ON	5	0	-1.4	0	3
	V_{F4}	ON	OFF		5	0	-1.4	0	
Large Signal Voltage Gain	V_{F5}	ON	ON	ON	15	0	-1.4	0	4
	V_{F6}				15	0	-11.4	0	

- Calculation -

1. Input Offset Voltage (V_{IO})

$$V_{IO} = \frac{|V_{F1}|}{1+R_F/R_S} \quad [V]$$

2. Input Offset Current (I_{IO})

$$I_{IO} = \frac{|V_{F2}-V_{F1}|}{R_I \times (1+R_F/R_S)} \quad [A]$$

3. Input Bias Current (I_B)

$$I_B = \frac{|V_{F4}-V_{F3}|}{2 \times R_I \times (1+R_F/R_S)} \quad [A]$$

4. Large Signal Voltage Gain (A_V)

$$A_V = 20\mathrm{Log}\ \frac{\Delta E_K \times (1+R_F/R_S)}{|V_{F5}-V_{F6}|} \quad [dB]$$

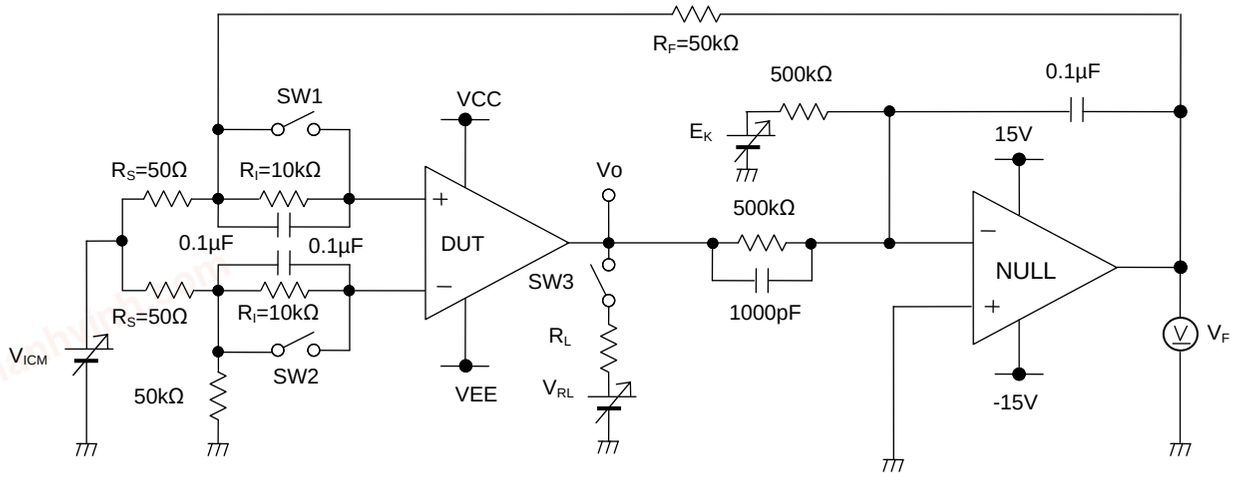

Figure 49. Test circuit1 (one channel only)

© 2012 ROHM Co., Ltd. All rights reserved.

chanhvinh.com

Switch Condition for Test Circuit 2

SW No.		SW 1	SW 2	SW 3	SW 4	SW 5	SW 6	SW 7
Supply Current		OFF	OFF	OFF	OFF	OFF	OFF	OFF
Output Sink Current	OUT=1.5V	OFF	ON	ON	OFF	OFF	OFF	ON
Output Saturation Voltage	I_{SINK}=4mA	OFF	ON	ON	OFF	ON	ON	OFF
Output Leakage Current	OUT=36V	OFF	ON	ON	OFF	OFF	OFF	ON
Response Time	R_L=5.1kΩ, V_{RL}=5V	ON	OFF	ON	ON	OFF	OFF	OFF

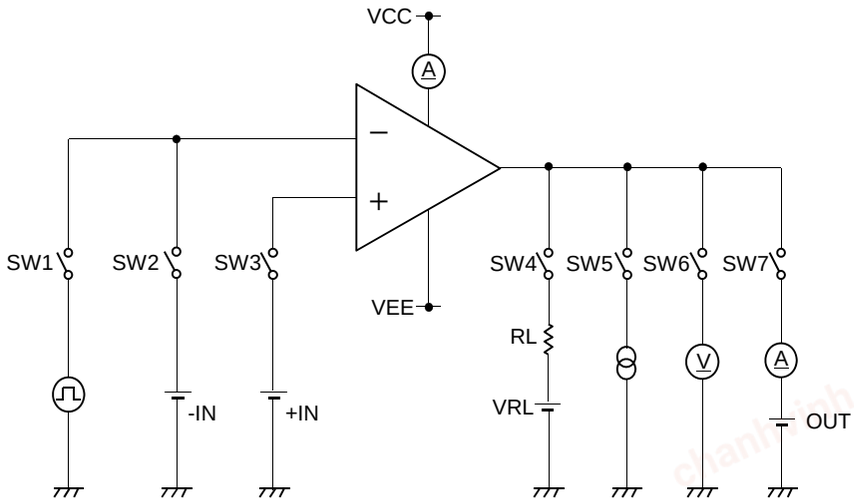

Figure 50. Test Circuit 2 (one channel only)

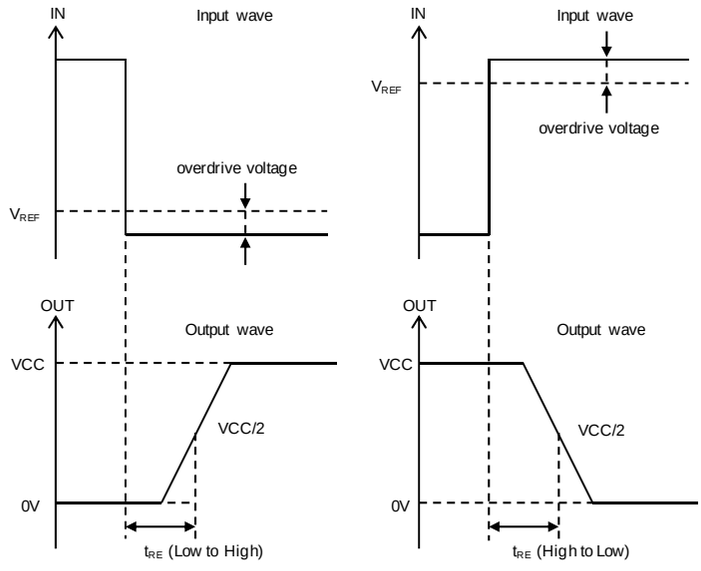

Figure 51. Response Time

© 2012 ROHM Co., Ltd. All rights reserved.

chanhvinh.com

Example of circuit

○Reference voltage is -IN

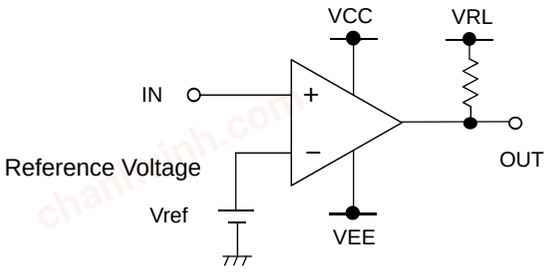

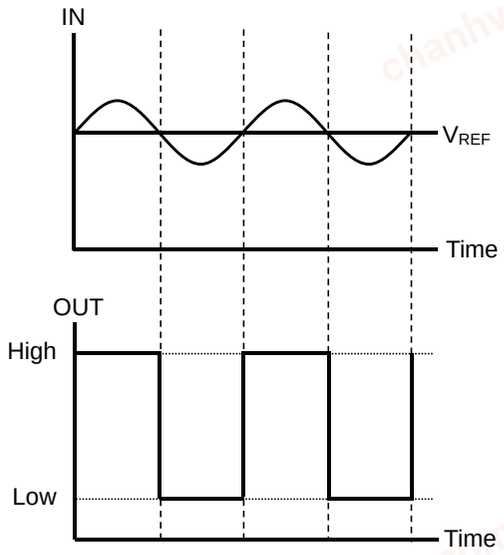

While the input voltage is higher that the reference voltage, the output voltage remains high. In case the input voltage becomes lower than the reference voltage, the output voltage will turn low.

○Reference voltage is +IN

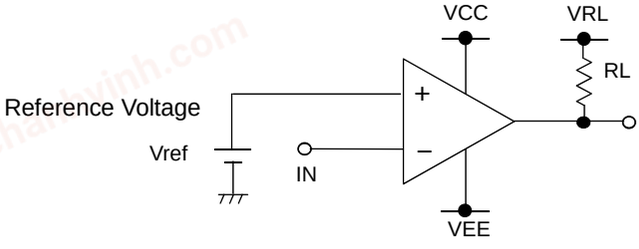

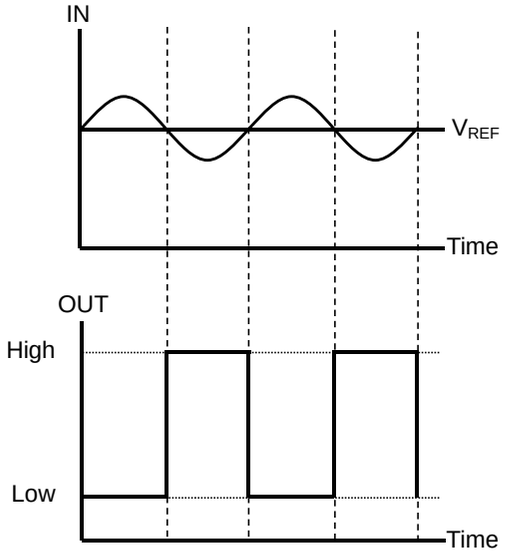

While the input voltage is smaller that the reference voltage, the output voltage remains high. In case the input voltage becomes higher than the reference voltage, the output voltage will turn low.

© 2012 ROHM Co., Ltd. All rights reserved.

chanhvinh.com

Operational Notes

1. **Reverse Connection of Power Supply**
   Connecting the power supply in reverse polarity can damage the IC. Take precautions against reverse polarity when connecting the power supply, such as mounting an external diode between the power supply and the IC's power supply terminals.

2. **Power Supply Lines**
   Design the PCB layout pattern to provide low impedance ground and supply lines. Separate the ground and supply lines of the digital and analog blocks to prevent noise in the ground and supply lines of the digital block from affecting the analog block. Furthermore, connect a capacitor to ground at all power supply pins. Consider the effect of temperature and aging on the capacitance value when using electrolytic capacitors.

3. **Ground Voltage**
   Ensure that no pins are at a voltage below that of the ground pin at any time, even during transient condition.

4. **Ground Wiring Pattern**
   When using both small-signal and large-current GND traces, the two ground traces should be routed separately but connected to a single ground at the reference point of the application board to avoid fluctuations in the small-signal ground caused by large currents. Also ensure that the GND traces of external components do not cause variations on the GND voltage. The power supply and ground lines must be as short and thick as possible to reduce line impedance.

5. **Thermal Consideration**
   Should by any chance the power dissipation rating be exceeded, the rise in temperature of the chip may result in deterioration of the properties of the chip. The absolute maximum rating of the Pd stated in this specification is when the IC is mounted on a 70mm x 70mm x 1.6mm glass epoxy board. In case of exceeding this absolute maximum rating, increase the board size and copper area to prevent exceeding the Pd rating.

6. **Recommended Operating Conditions**
   These conditions represent a range within which the expected characteristics of the IC can be approximately obtained. The electrical characteristics are guaranteed under the conditions of each parameter.

7. **Inrush Current**
   When power is first supplied to the IC, it is possible that the internal logic may be unstable and inrush current may flow instantaneously due to the internal powering sequence and delays, especially if the IC has more than one power supply. Therefore, give special consideration to power coupling capacitance, power wiring, width of GND wiring, and routing of connections.

8. **Operation Under Strong Electromagnetic Field**
   Operating the IC in the presence of a strong electromagnetic field may cause the IC to malfunction.

9. **Testing on Application Boards**
   When testing the IC on an application board, connecting a capacitor directly to a low-impedance output pin may subject the IC to stress. Always discharge capacitors completely after each process or step. The IC's power supply should always be turned off completely before connecting or removing it from the test setup during the inspection process. To prevent damage from static discharge, ground the IC during assembly and use similar precautions during transport and storage.

10. **Inter-pin Short and Mounting Errors**
    Ensure that the direction and position are correct when mounting the IC on the PCB. Incorrect mounting may result in damaging the IC. Avoid nearby pins being shorted to each other especially to ground. Inter-pin shorts could be due to many reasons such as metal particles, water droplets (in very humid environment) and unintentional solder bridge deposited in between pins during assembly to name a few.

© 2012 ROHM Co., Ltd. All rights reserved.

chanhvinh.com

Operational Notes – continued

11. **Regarding Input Pins of the IC**
This monolithic IC contains P+ isolation and P substrate layers between adjacent elements in order to keep them isolated. P-N junctions are formed at the intersection of the P layers with the N layers of other elements, creating a parasitic diode or transistor. For example (refer to figure below):

When GND > Pin A and GND > Pin B, the P-N junction operates as a parasitic diode.
When GND > Pin B, the P-N junction operates as a parasitic transistor.

Parasitic diodes inevitably occur in the structure of the IC. The operation of parasitic diodes can result in mutual interference among circuits, operational faults, or physical damage. Therefore, conditions that cause these diodes to operate, such as applying a voltage lower than the GND voltage to an input pin (and thus to the P substrate) should be avoided.

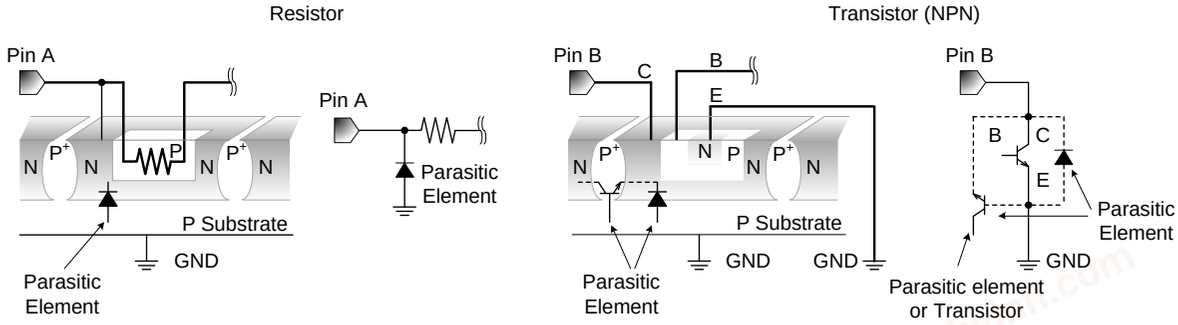

Figure 52. Example of Monolithic IC Structure

12. **Unused Circuits**
When there are unused circuits it is recommended that they be connected as in Figure 53, setting the non-inverting input terminal to a potential within the in-phase input voltage range (V_{ICR}).

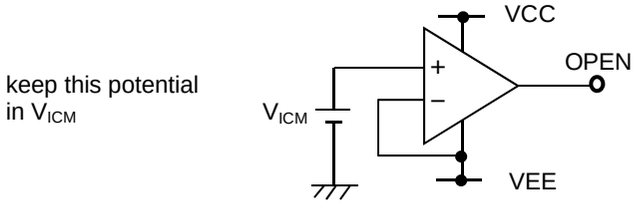

Figure 53. Disable Circuit Example

13. **Input Terminal Voltage**
Applying VEE + 36V to the input terminal is possible without causing deterioration of the electrical characteristics or destruction, irrespective of the supply voltage. However, this does not ensure normal circuit operation. Please note that the circuit operates normally only when the input voltage is within the common mode input voltage range of the electric characteristics.

14. **Power Supply (signal / dual)**
The op-amp operates when the specified voltage supplied is between VCC and VEE. Therefore, the single supply op-amp can be used as a dual supply op-amp as well.

15. **Terminal short-circuits**
When the output and VCC terminals are shorted, excessive output current may flow, resulting in undue heat generation and, subsequently, destruction.

16. **IC Handling**
Applying mechanical stress to the IC by deflecting or bending the board may cause fluctuations in the electrical characteristics due to piezo resistance effects.

© 2012 ROHM Co., Ltd. All rights reserved.

chanhvinh.com

Physical Dimensions Tape and Reel Information

Package Name	SOP8

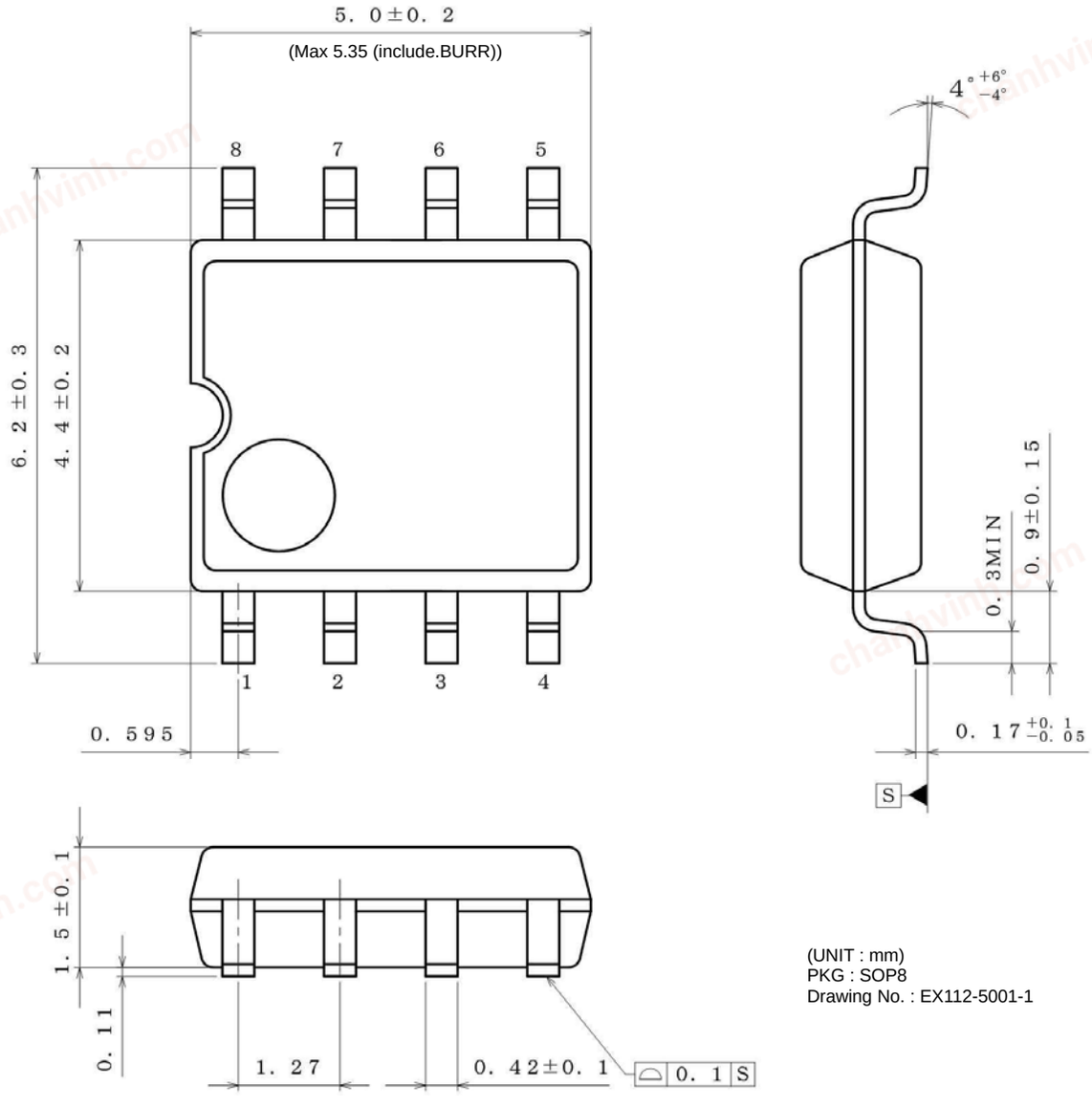

(UNIT : mm)
PKG : SOP8
Drawing No. : EX112-5001-1

<Tape and Reel information>

Tape	Embossed carrier tape
Quantity	2500pcs
Direction of feed	E2 (The direction is the 1pin of product is at the upper left when you hold reel on the left hand and you pull out the tape on the right hand)

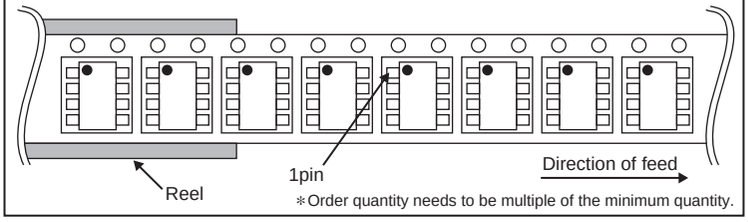

∗Order quantity needs to be multiple of the minimum quantity.

© 2012 ROHM Co., Ltd. All rights reserved.

chanhvinh.com

Physical Dimension Tape and Reel Information - continued

Package Name	SSOP-B8

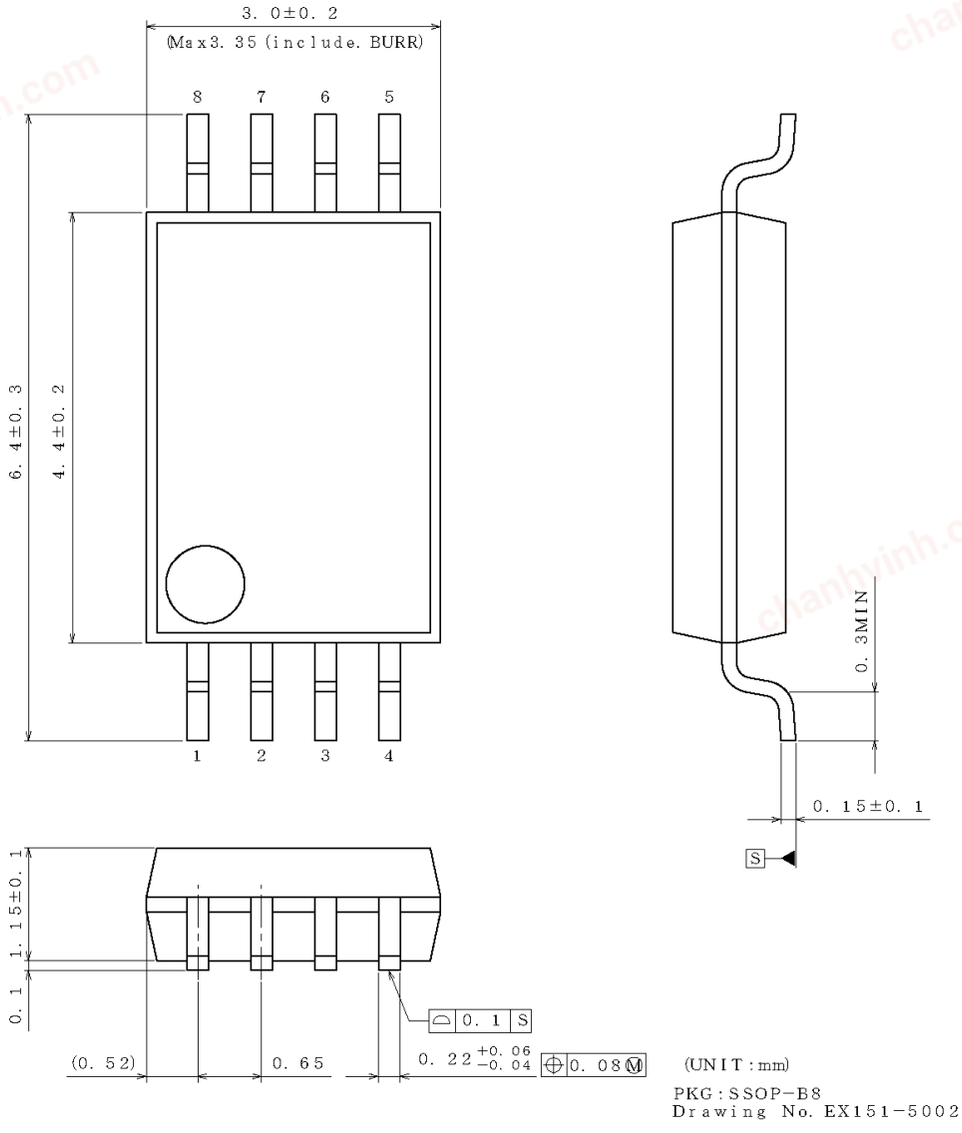

<Tape and Reel information>

Tape	Embossed carrier tape
Quantity	2500pcs
Direction of feed	E2 (The direction is the 1pin of product is at the upper left when you hold reel on the left hand and you pull out the tape on the right hand)

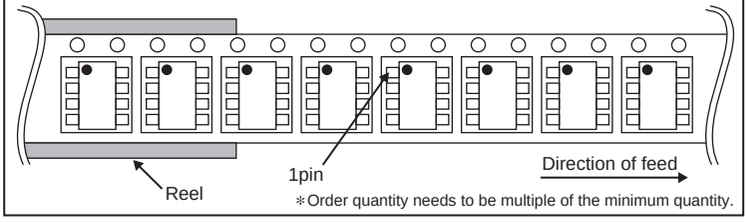

∗Order quantity needs to be multiple of the minimum quantity.

© 2012 ROHM Co., Ltd. All rights reserved.

chanhvinh.com

Physical Dimension Tape and Reel Information - continued

Package Name	MSOP8

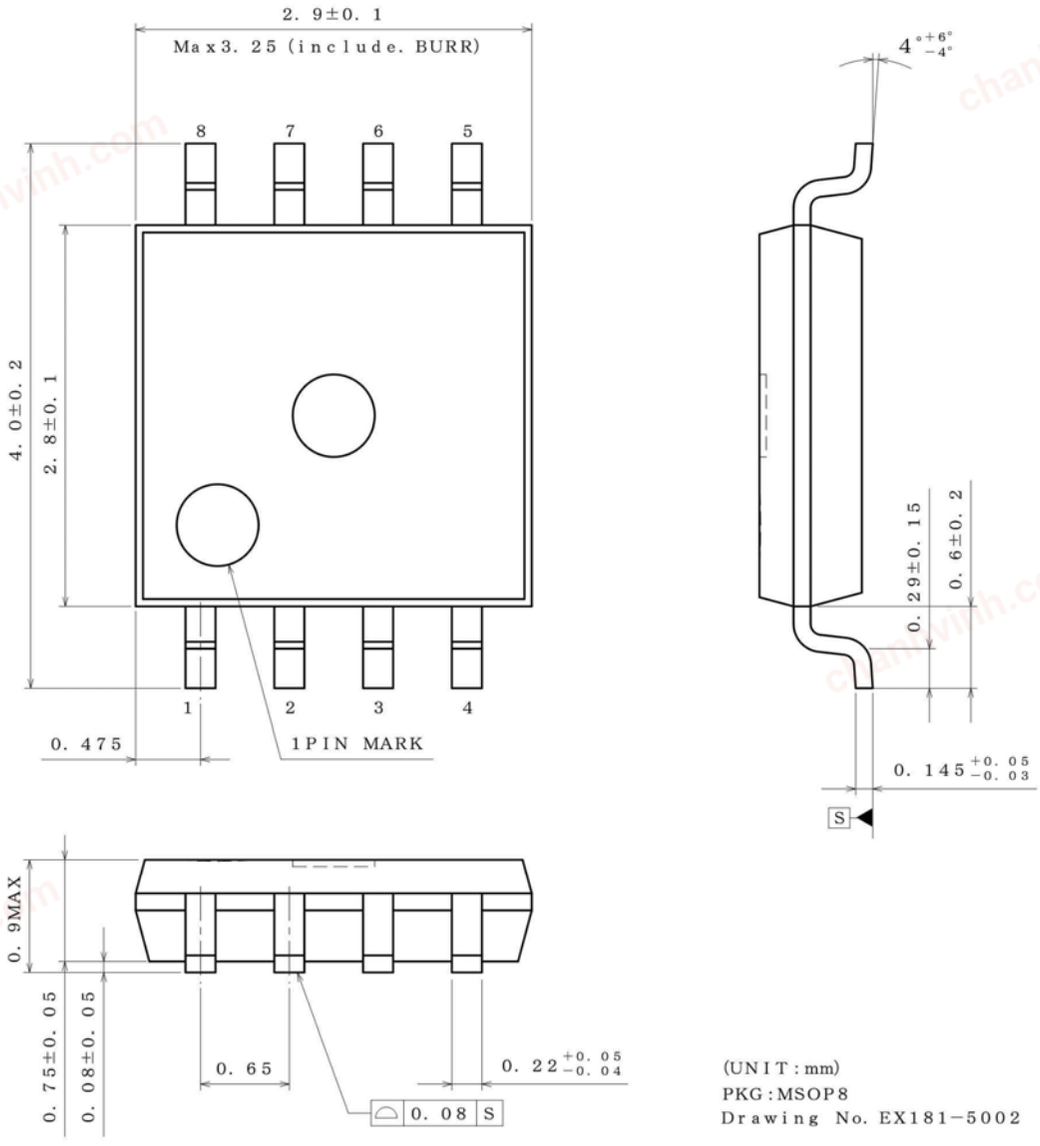

<Tape and Reel information>

Tape	Embossed carrier tape
Quantity	3000pcs
Direction of feed	TR (The direction is the 1pin of product is at the upper right when you hold reel on the left hand and you pull out the tape on the right hand)

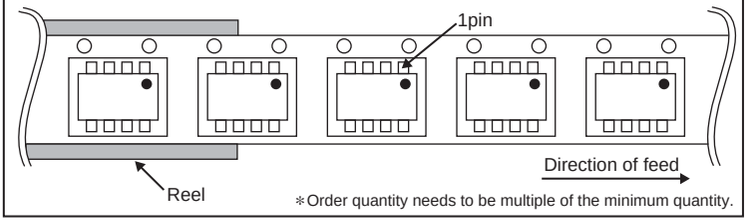

∗Order quantity needs to be multiple of the minimum quantity.

© 2012 ROHM Co., Ltd. All rights reserved.

chanhvinh.com

Physical Dimension Tape and Reel Information - continued

Package Name	SOP14

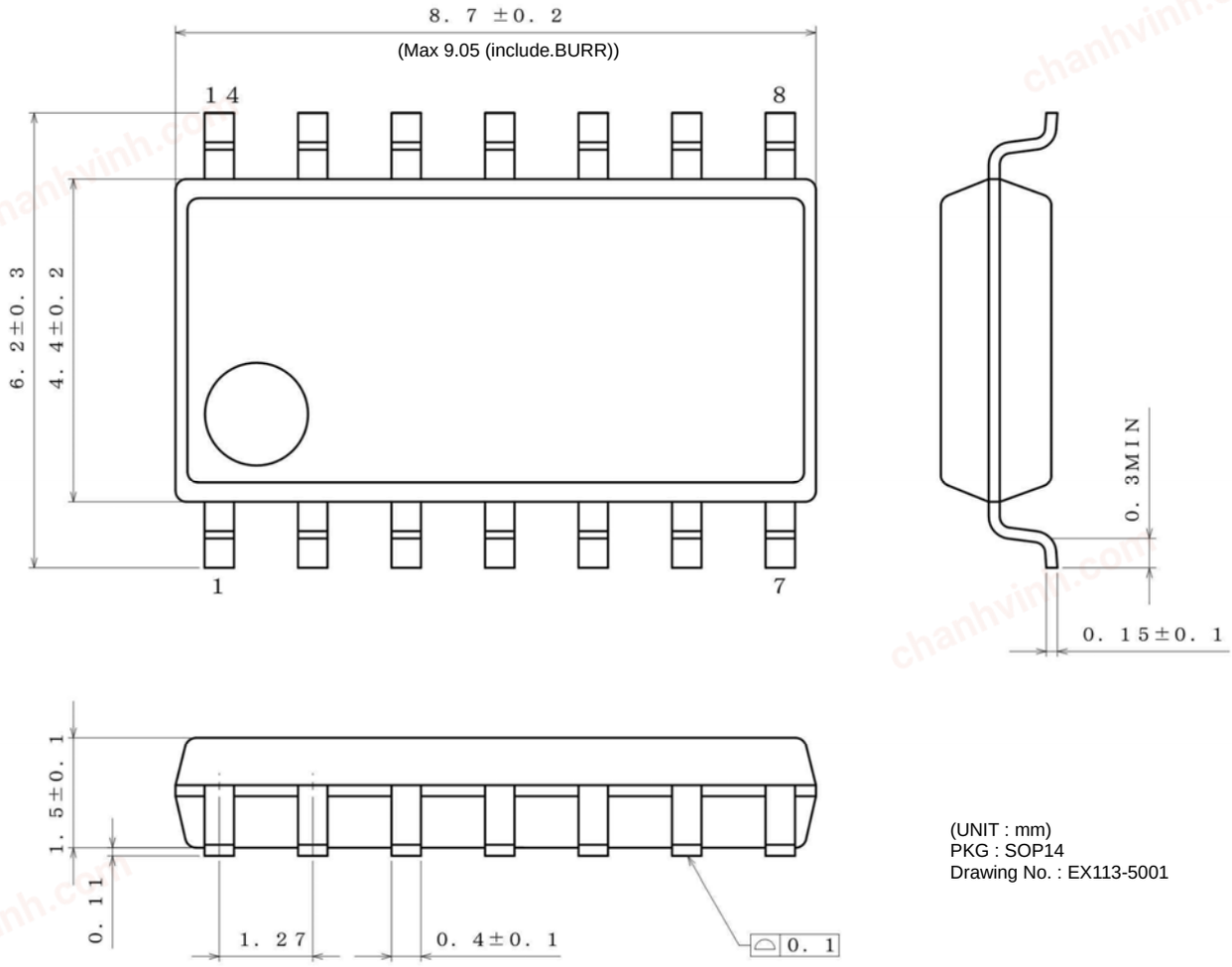

(UNIT : mm)
PKG : SOP14
Drawing No. : EX113-5001

<Tape and Reel information>

Tape	Embossed carrier tape
Quantity	2500pcs
Direction of feed	E2 (The direction is the 1pin of product is at the upper left when you hold reel on the left hand and you pull out the tape on the right hand)

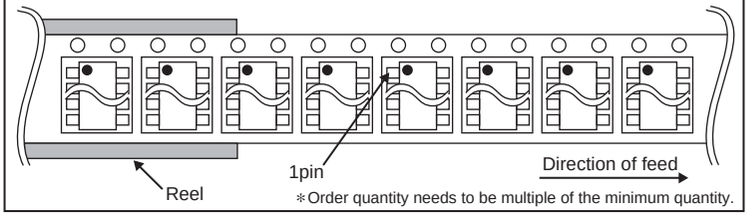

∗Order quantity needs to be multiple of the minimum quantity.

© 2012 ROHM Co., Ltd. All rights reserved.

chanhvinh.com

Physical Dimension Tape and Reel Information - continued

Package Name	SSOP-B14

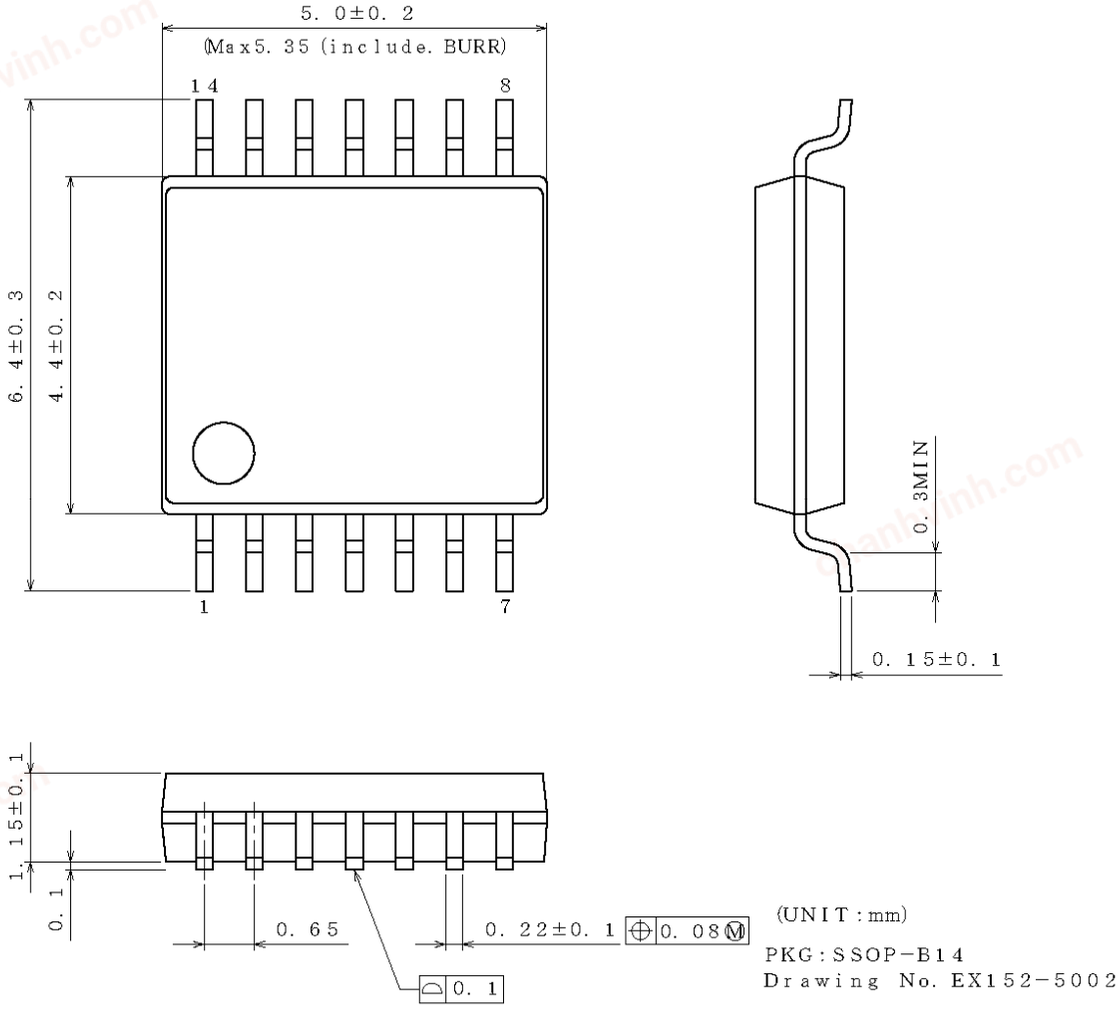

<Tape and Reel information>

Tape	Embossed carrier tape
Quantity	2500pcs
Direction of feed	E2 (The direction is the 1pin of product is at the upper left when you hold reel on the left hand and you pull out the tape on the right hand)

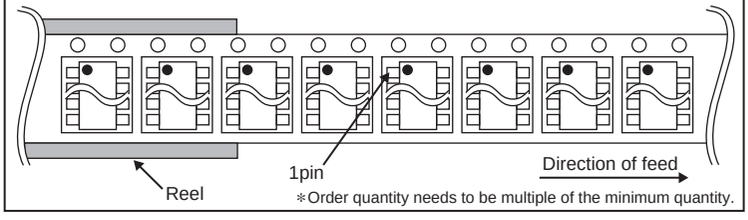

∗Order quantity needs to be multiple of the minimum quantity.

© 2012 ROHM Co., Ltd. All rights reserved.

chanhvinh.com

Marking Diagrams

SOP8(TOP VIEW)

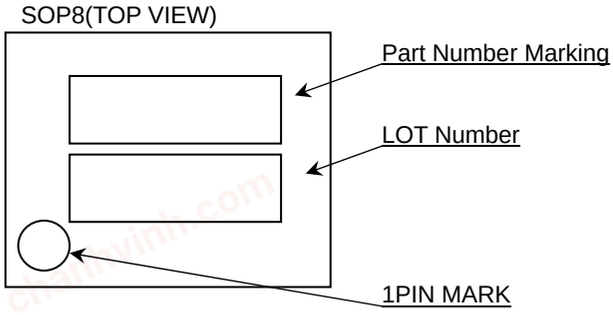

SSOP-B8(TOP VIEW)

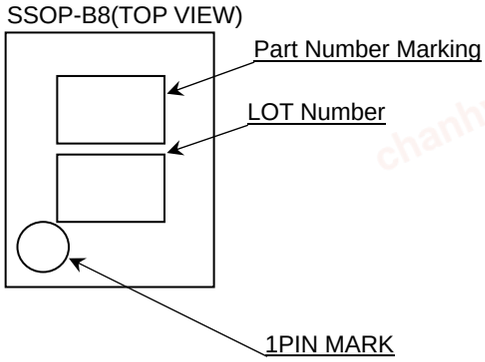

MSOP8(TOP VIEW)

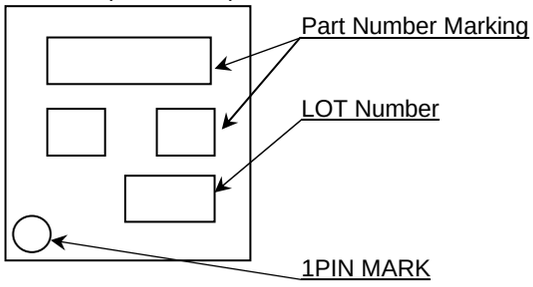

SOP14(TOP VIEW)

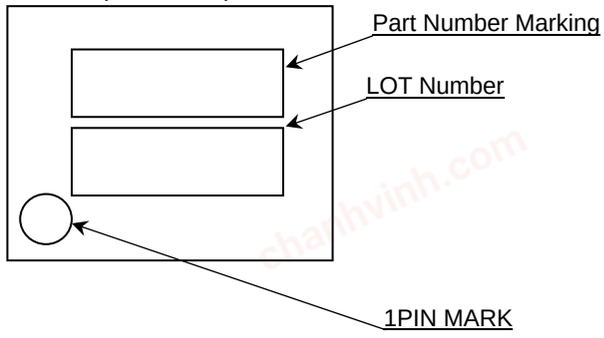

SSOP-B14(TOP VIEW)

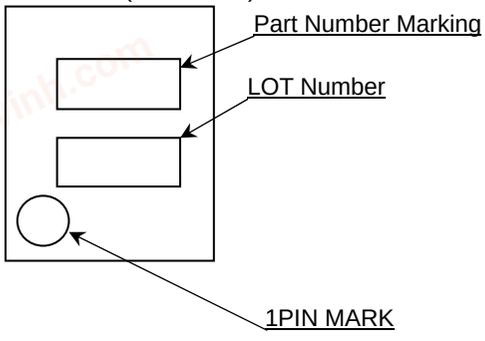

Product Name		Package Type	Marking
BA2903Y	F-M	SOP8	03YM
	FV-M	SSOP-B8	03YM
	FVM-M	MSOP8	03YM
BA2901Y	F-M	SOP14	BA2901YFM
	FV-M	SSOP-B14	01YM

© 2012 ROHM Co., Ltd. All rights reserved.

chanhvinh.com

Land pattern data

SOP8, SSOP-B8, MSOP8, SOP14, SSOP-B14

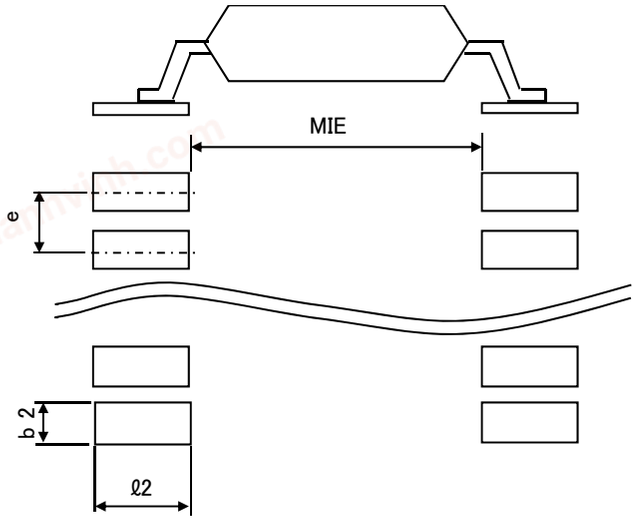

All dimensions in mm

PKG	Land pitch e	Land space MIE	Land length ≧ℓ 2	Land width b2
SOP8 SOP14	1.27	4.60	1.10	0.76
SSOP-B8 SSOP-B14	0.65	4.60	1.20	0.35
MSOP8	0.65	2.62	0.99	0.35

Revision History

Date	Revision	Changes
11.Apr.2012	001	New Release
13.Sep.2013	002	Land pattern data inserted. SOP8, SSOP-B8, MSOP8 Power dissipation corrected. SSOP-B8, SSOP-B14 corrected.

© 2012 ROHM Co., Ltd. All rights reserved.

chanhvinh.com

Notice

Precaution on using ROHM Products

1. If you intend to use our Products in devices requiring extremely high reliability (such as medical equipment (Note 1), aircraft/spacecraft, nuclear power controllers, etc.) and whose malfunction or failure may cause loss of human life, bodily injury or serious damage to property ("Specific Applications"), please consult with the ROHM sales representative in advance. Unless otherwise agreed in writing by ROHM in advance, ROHM shall not be in any way responsible or liable for any damages, expenses or losses incurred by you or third parties arising from the use of any ROHM's Products for Specific Applications.

(Note1) Medical Equipment Classification of the Specific Applications

JAPAN	USA	EU	CHINA
CLASSⅢ	CLASSⅢ	CLASSⅡb	CLASSⅢ
CLASSⅣ		CLASSⅢ	

2. ROHM designs and manufactures its Products subject to strict quality control system. However, semiconductor products can fail or malfunction at a certain rate. Please be sure to implement, at your own responsibilities, adequate safety measures including but not limited to fail-safe design against the physical injury, damage to any property, which a failure or malfunction of our Products may cause. The following are examples of safety measures:
   [a] Installation of protection circuits or other protective devices to improve system safety
   [b] Installation of redundant circuits to reduce the impact of single or multiple circuit failure

3. Our Products are not designed under any special or extraordinary environments or conditions, as exemplified below. Accordingly, ROHM shall not be in any way responsible or liable for any damages, expenses or losses arising from the use of any ROHM's Products under any special or extraordinary environments or conditions. If you intend to use our Products under any special or extraordinary environments or conditions (as exemplified below), your independent verification and confirmation of product performance, reliability, etc, prior to use, must be necessary:
   [a] Use of our Products in any types of liquid, including water, oils, chemicals, and organic solvents
   [b] Use of our Products outdoors or in places where the Products are exposed to direct sunlight or dust
   [c] Use of our Products in places where the Products are exposed to sea wind or corrosive gases, including Cl_2, H_2S, NH_3, SO_2, and NO_2
   [d] Use of our Products in places where the Products are exposed to static electricity or electromagnetic waves
   [e] Use of our Products in proximity to heat-producing components, plastic cords, or other flammable items
   [f] Sealing or coating our Products with resin or other coating materials
   [g] Use of our Products without cleaning residue of flux (even if you use no-clean type fluxes, cleaning residue of flux is recommended); or Washing our Products by using water or water-soluble cleaning agents for cleaning residue after soldering
   [h] Use of the Products in places subject to dew condensation

4. The Products are not subject to radiation-proof design.

5. Please verify and confirm characteristics of the final or mounted products in using the Products.

6. In particular, if a transient load (a large amount of load applied in a short period of time, such as pulse. is applied, confirmation of performance characteristics after on-board mounting is strongly recommended. Avoid applying power exceeding normal rated power; exceeding the power rating under steady-state loading condition may negatively affect product performance and reliability.

7. De-rate Power Dissipation (Pd) depending on Ambient temperature (Ta). When used in sealed area, confirm the actual ambient temperature.

8. Confirm that operation temperature is within the specified range described in the product specification.

9. ROHM shall not be in any way responsible or liable for failure induced under deviant condition from what is defined in this document.

Precaution for Mounting / Circuit board design

1. When a highly active halogenous (chlorine, bromine, etc.) flux is used, the residue of flux may negatively affect product performance and reliability.

2. In principle, the reflow soldering method must be used; if flow soldering method is preferred, please consult with the ROHM representative in advance.

For details, please refer to ROHM Mounting specification

© 2014 ROHM Co., Ltd. All rights reserved.

chanhvinh.com

Precautions Regarding Application Examples and External Circuits

1. If change is made to the constant of an external circuit, please allow a sufficient margin considering variations of the characteristics of the Products and external components, including transient characteristics, as well as static characteristics.

2. You agree that application notes, reference designs, and associated data and information contained in this document are presented only as guidance for Products use. Therefore, in case you use such information, you are solely responsible for it and you must exercise your own independent verification and judgment in the use of such information contained in this document. ROHM shall not be in any way responsible or liable for any damages, expenses or losses incurred by you or third parties arising from the use of such information.

Precaution for Electrostatic

This Product is electrostatic sensitive product, which may be damaged due to electrostatic discharge. Please take proper caution in your manufacturing process and storage so that voltage exceeding the Products maximum rating will not be applied to Products. Please take special care under dry condition (e.g. Grounding of human body / equipment / solder iron, isolation from charged objects, setting of Ionizer, friction prevention and temperature / humidity control).

Precaution for Storage / Transportation

1. Product performance and soldered connections may deteriorate if the Products are stored in the places where:
   - [a] the Products are exposed to sea winds or corrosive gases, including Cl2, H2S, NH3, SO2, and NO2
   - [b] the temperature or humidity exceeds those recommended by ROHM
   - [c] the Products are exposed to direct sunshine or condensation
   - [d] the Products are exposed to high Electrostatic

2. Even under ROHM recommended storage condition, solderability of products out of recommended storage time period may be degraded. It is strongly recommended to confirm solderability before using Products of which storage time is exceeding the recommended storage time period.

3. Store / transport cartons in the correct direction, which is indicated on a carton with a symbol. Otherwise bent leads may occur due to excessive stress applied when dropping of a carton.

4. Use Products within the specified time after opening a humidity barrier bag. Baking is required before using Products of which storage time is exceeding the recommended storage time period.

Precaution for Product Label

QR code printed on ROHM Products label is for ROHM's internal use only.

Precaution for Disposition

When disposing Products please dispose them properly using an authorized industry waste company.

Precaution for Foreign Exchange and Foreign Trade act

Since our Products might fall under controlled goods prescribed by the applicable foreign exchange and foreign trade act, please consult with ROHM representative in case of export.

Precaution Regarding Intellectual Property Rights

1. All information and data including but not limited to application example contained in this document is for reference only. ROHM does not warrant that foregoing information or data will not infringe any intellectual property rights or any other rights of any third party regarding such information or data. ROHM shall not be in any way responsible or liable for infringement of any intellectual property rights or other damages arising from use of such information or data.:

2. No license, expressly or implied, is granted hereby under any intellectual property rights or other rights of ROHM or any third parties with respect to the information contained in this document.

Other Precaution

1. This document may not be reprinted or reproduced, in whole or in part, without prior written consent of ROHM.

2. The Products may not be disassembled, converted, modified, reproduced or otherwise changed without prior written consent of ROHM.

3. In no event shall you use in any way whatsoever the Products and the related technical information contained in the Products or this document for any military purposes, including but not limited to, the development of mass-destruction weapons.

4. The proper names of companies or products described in this document are trademarks or registered trademarks of ROHM, its affiliated companies or third parties.

© 2014 ROHM Co., Ltd. All rights reserved.

chanhvinh.com

General Precaution

1. Before you use our Products, you are requested to carefully read this document and fully understand its contents. ROHM shall not be in any way responsible or liable for failure, malfunction or accident arising from the use of any ROHM's Products against warning, caution or note contained in this document.

2. All information contained in this document is current as of the issuing date and subject to change without any prior notice. Before purchasing or using ROHM's Products, please confirm the latest information with a ROHM sales representative.

3. The information contained in this document is provided on an "as is" basis and ROHM does not warrant that all information contained in this document is accurate and/or error-free. ROHM shall not be in any way responsible or liable for any damages, expenses or losses incurred by you or third parties resulting from inaccuracy or errors of or concerning such information.

© 2014 ROHM Co., Ltd. All rights reserved.