chanhvinh.com

White LED, 3 mm

RND components

Features



- Low power consumption.
- General purpose leads.
- Versatile mounting on p.c. board or panel.
- I.C. compatible/low current requirement.
- High efficiency.
- Compliance with EU REACH.
- The product itself will remain within RoHS compliant Version.

Applications:

- Message panels / Optical Indicators / Backlighting / Marker Lights / Home appliance

Descriptions:

- The series is specially designed for applications requiring higher brightness.
- The phosphor filled in the reflector converts the blue emission of InGaN chip to ideal white.

Absolute Maximum Ratings at Ta=25℃

Parameters	Symbol	Max.	Unit
Power Dissipation	P_d	85	mW
Peak Forward Current [a]	I_{FP}	100	mA
DC Forward Current [b]	I_F	25	mA
Reverse Voltage [c]	V_R	5	V
Operating Temperature Range	T_{opr}	-40℃ to +80℃	
Storage Temperature Range	T_{stg}	-40℃ to +85℃	
Soldering Temperature	T_{sld}	260℃ for 5 Seconds	

Notes:

a. Derate linearly as shown in derating curve.
b. Duty Factor = 10%, Frequency = 1 kHz.
c. Reverse voltage (VR) condition is applied for IR test only. The device is not designed for reverse operation.

Device Selection Guide

Part No.	Emitting Color	Lens Color
RND 135-00203	Neutral White	Water Clear

chanhvinh.com

White LED, 3 mm

RND components

Electrical Optical Characteristics at Ta 25℃

Parameters	Symbol	Min.	Typ.	Max.	Unit	Test Condition
Luminous Intensity [a]	Iv	5000	8500	---	mcd	IF=20mA
Viewing Angle [b]	$2\theta_{1/2}$	---	30	---	deg.	IF=20mA
Chromaticity Coordinates [c]	x	---	0.33	---		IF=20mA
	y	---	0.32	---		IF=20mA
Color Temperature	CCT	---	5500	---	K	IF=20mA
Color Rendering Index	CRI	---	80	---	Ra	IF=20mA
Forward Voltage	VF	2.6	3.0	3.4	V	IF=20mA
Reverse Current [d]	IR	---	---	10	μA	VR=5V

Notes:

a. Luminous intensity is measured with a light sensor and filter combination that approximates the CIE eye-response curve. The Iv guarantee must be included with ±15% testing tolerance.

b. $2\theta_{1/2}$ is the o -axis angle where the luminous intensity is 1⁄2 the peak intensity.

c. The chromaticity coordinates (x, y) is derived from the 1931 CIE chromaticity diagram.

d. Reverse current (IR) condition is applied for VR test only. The device is not designed for reverse operation.

chanhvinh.com

White LED, 3 mm

RND components

Package Dimensions

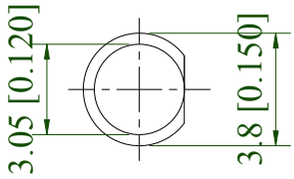

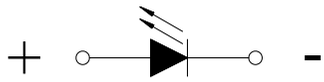

POLARITY

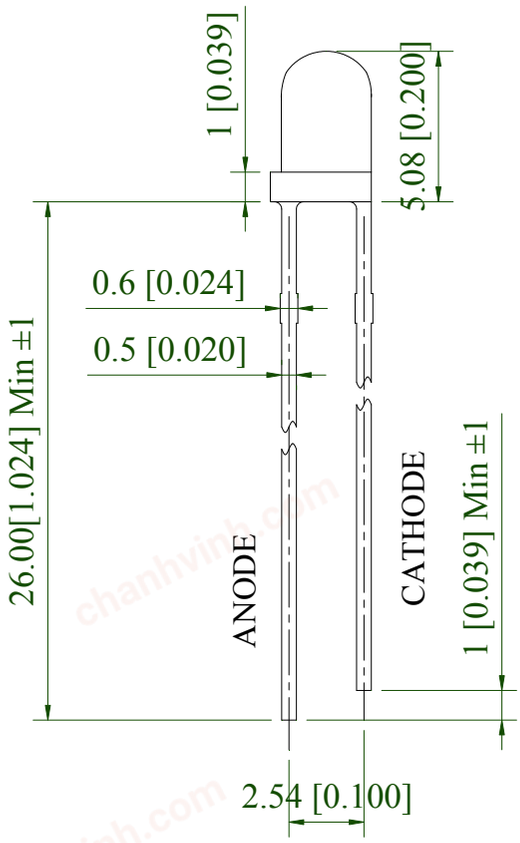

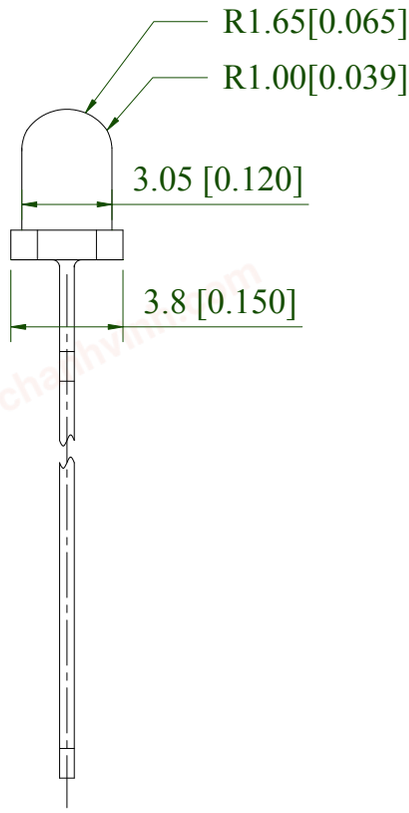

Notes:

1. All dimensions are in millimeters (inches).
2. Tolerance is ± 0.25 mm (.010″) unless otherwise noted.
3. Protruded resin under flange is 1.00mm (.039″) max.

chanhvinh.com

White LED, 3 mm

RND components

Typical Electrical / Optical Characteristics Curves
(25℃ Ambient Temperature Unless Otherwise Noted)

Spectrum Distribution

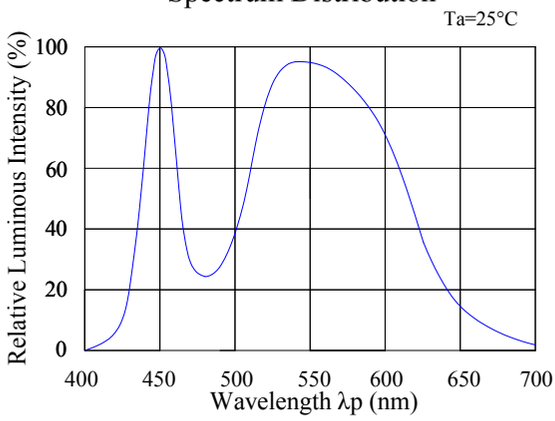

Forward Current & Forward Voltage

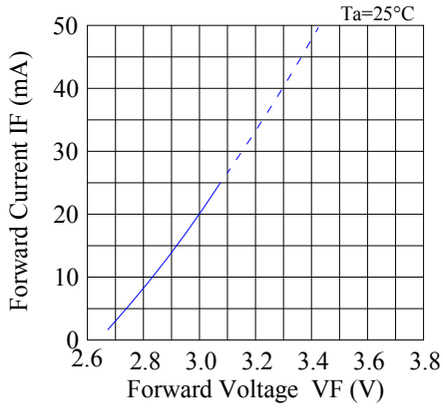

Luminous Intensity & Ambient Temperature

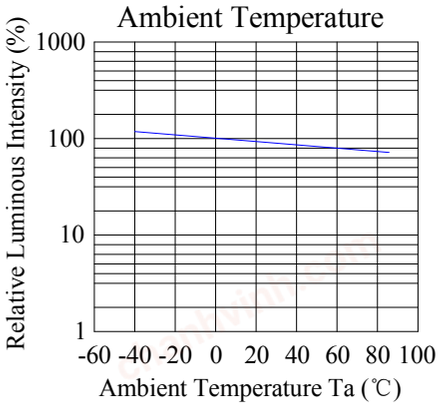

Luminous Intensity & Forward Current

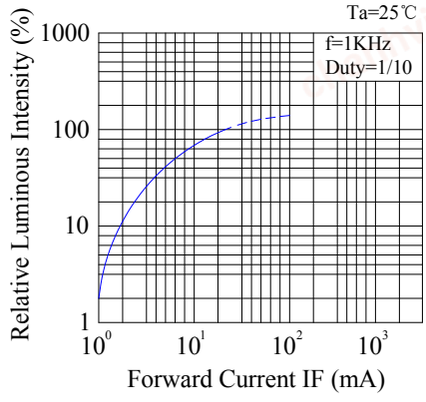

Forward Current Derating Curve

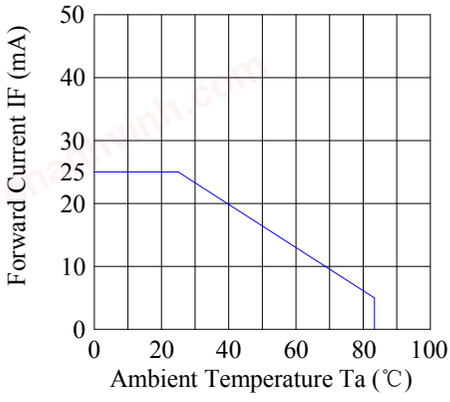

Radiation Diagram

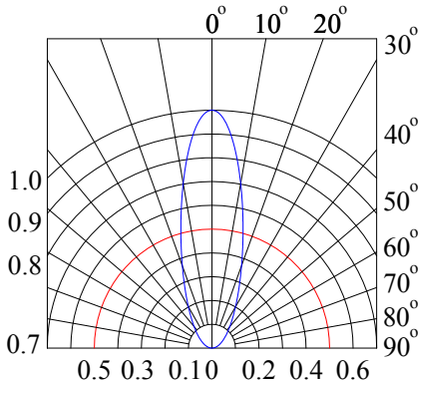

chanhvinh.com

White LED, 3 mm

RND components

CIE Chromaticity Diagram:

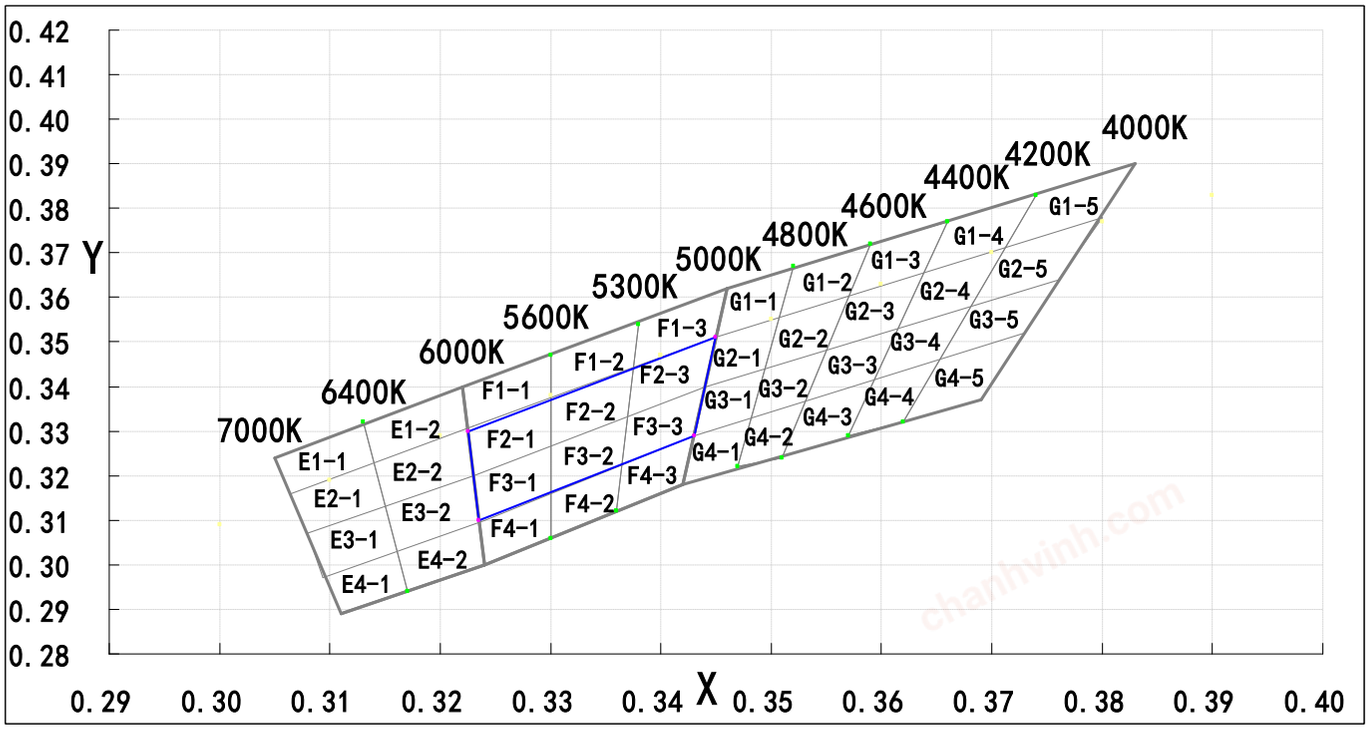

Chromaticity Coordinates Specifications for Bin Rank:

Bin Code	Left x	Left y	Top x	Top y	Right x	Right y	Bottom x	Bottom y
F2-1	0.323	0.320	0.330	0.326	0.330	0.338	0.323	0.330
F3-1	0.324	0.310	0.330	0.316	0.330	0.326	0.323	0.320
F2-2	0.330	0.326	0.337	0.333	0.338	0.345	0.33	0.338
F3-2	0.330	0.316	0.337	0.323	0.337	0.333	0.330	0.326
F2-3	0.337	0.333	0.344	0.340	0.345	0.351	0.338	0.345
F3-3	0.337	0.323	0.343	0.329	0.344	0.340	0.337	0.333

Note: Color Coordinates Measurement allowance is ±0.01.

chanhvinh.com

White LED, 3 mm

RND components

Bin Table Specification:

Luminous Intensity Iv (mcd) IF@20mA

Bin Code	Min	Max.
24	5000	6500
25	6500	8500
26	8500	11000
27	11000	14000

Note: Tolerance of each bin limit is ±15%.

Forward Voltage VF (V) IF@20mA

Bin Code	Min	Max.
B	2.6	2.8
C	2.8	3.0
D	3.0	3.2
E	3.2	3.4

Note: Forward Voltage Measurement allowance is ±0.2V.

Chromaticity Coordinates, CC (x, y), IF@20mA

Bin Code	Chromaticity Coordinates, IF@20mA				
F2-1	x	0.323	0.330	0.330	0.323
	y	0.320	0.326	0.338	0.330
F3-1	x	0.324	0.330	0.330	0.323
	y	0.310	0.316	0.326	0.320
F2-2	x	0.330	0.337	0.338	0.330
	y	0.326	0.333	0.345	0.338
F3-2	x	0.330	0.337	0.337	0.330
	y	0.316	0.323	0.333	0.326
F2-3	x	0.337	0.344	0.345	0.338
	y	0.333	0.340	0.351	0.345
F3-3	x	0.337	0.343	0.344	0.337
	y	0.323	0.329	0.340	0.333

Note: Color Coordinates Measurement allowance is ±0.01.

chanhvinh.com

White LED, 3 mm

RND components

Cautions

1. **Over-current-proof**

Customer must apply resistors for protection, otherwise slight voltage shift will cause big current change (Burn out will happen).

2. **Storage**

2.1 The LEDs should be stored at 30°C or less and 70%RH or less after being shipped from RND and the storage life limits are 3 months. If the LEDs are stored for 3 months or more, they can be stored for a year in a sealed container with a nitrogen atmosphere and moisture absorbent material.

2.2 Please avoid rapid transitions in ambient temperature, especially, in high humidity environments where condensation can occur.

3. **Cleaning**

Use alcohol-based cleaning solvents such as isopropyl alcohol to clean the LEDs if necessary.

4. **Lead Forming & Assembly**

During lead forming, the leads should be bent at a point at least 1.6mm from the base of LED lens. Do not use the base of the lead frame as a fulcrum during forming. Lead forming must be done before soldering, at normal temperature. During assembly on PCB, use minimum clinch force possible to avoid excessive mechanical stress.

5. **Soldering**

When soldering, for Lamp without stopper type and must be leave a minimum of 3mm clearance from the base of the lens to the soldering point. Do not apply any external stress to the lead frame during soldering while the LED is at high temperature.

Recommended soldering conditions:

Soldering Iron		**Wave Soldering**	
Temperature Soldering Time	300℃ Max. 3 sec. Max. (one time only)	Pre-heat Pre-heat Time Solder Wave Soldering Time	100℃ Max. 60 sec. Max. 260℃ Max. 5 sec. Max.

Note: Excessive soldering temperature and / or time might result in deformation of the LED lens or catastrophic failure of the LED.

6. **Drive Method**

An LED is a current-operated device. In order to ensure intensity uniformity on multiple LEDs connected in parallel in an application, it is recommended that a current limiting resistor be incorporated in the drive circuit, in series with each LED as shown in Circuit A below.

Circuit model A

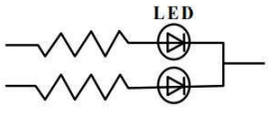

Circuit model B

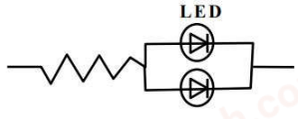

chanhvinh.com

White LED, 3 mm

(A) Recommended circuit

(B) The brightness of each LED might appear different due to the differences in the I-V characteristics of those LEDs.

7. **Repairing**

Repair should not be done after the LEDs have been soldered. When repairing is unavoidable, a double-head soldering iron should be used. It should be confirmed beforehand whether the characteristics of the LEDs will or will not be damaged by repairing.

8. **ESD (Electrostatic Discharge)**

Static Electricity or power surge will damage the LED. Suggestions to prevent ESD damage:

8.1. Use a conductive wrist band or anti- electrostatic glove when handling these LEDs.

8.2. All devices, equipment, and machinery must be properly grounded.

8.3. Work tables, storage racks, etc. should be properly grounded.

8.4. Use ion blower to neutralize the static charge which might have built up on surface of the LEDs plastic lens as a result of friction between LEDs during storage and handing.

ESD-damaged LEDs will exhibit abnormal characteristics such as high reverse leakage current, low forward voltage, or "no light up" at low currents.

To verify for ESD damage, check for "light up" and VF of the suspect LEDs at low currents.

The VF of "good" LEDs should be >2.0V@0.1mA for InGaN product and >1.4V@0.1mA for AlInGaP product.

9. **Others**

9.1 The information included in this document reflects representative usage scenarios and is intended for technical reference only.

9.2 The part number, type, and specifications mentioned in this document are subject to future change and improvement without notice. Before production usage customer should refer to the latest datasheet for the updated specifications.

9.3 When using the products referenced in this document, please make sure the product is being operated within the environmental and electrical limits specified in the datasheet. If customer usage exceeds the specified limits, RND will not be responsible for any subsequent issues.

9.4 The LEDs described here are intended to be used for ordinary electronic equipment (such as office equipment, communication equipment and household applications). Consult RND Sales in advance for information on applications in which exceptional reliability is required, particularly when the failure or malfunction of the LEDs may directly jeopardize life or health, such as in aviation, transportation, traffic control equipment, medical and life support systems and safety devices.

Art. Nr.
RND 135-00203