chanhvinh.com

LED

Features:

- Low power consumption.
- General purpose leads.
- High efficiency.
- Reliable and robust.

Applications:

- Telephone.
- Computer.
- Circuit board.
- Status indicators.
- Commercial use.

Part No.	Emitting Color	Lens Color(LED)
RND 135-00158	Blue	Water Clear

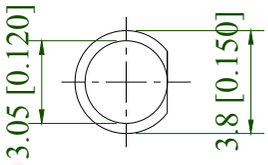

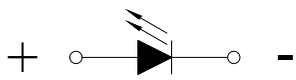

POLARITY

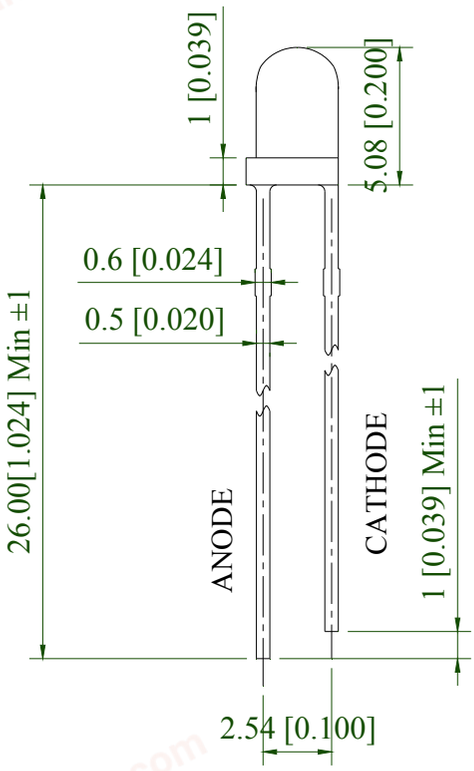

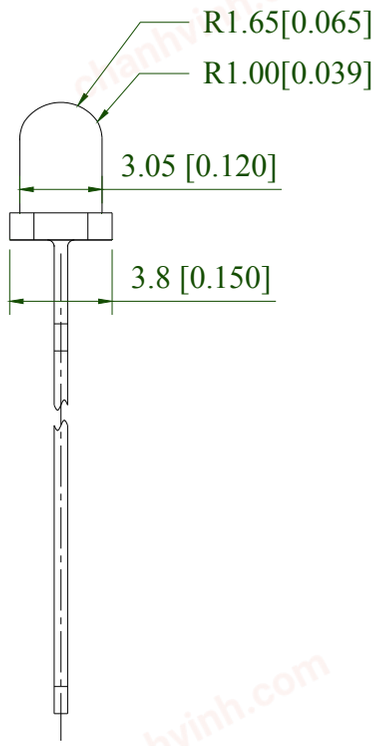

chanhvinh.com

LED

RND components

Absolute Maximum Ratings at Ta=25℃

Parameters	Symbol	Max.	Unit
Power Dissipation	P_d	90	mW
Peak Forward Current [a]	I_{FP}	100	mA
DC Forward Current [b]	I_F	25	mA
Reverse Voltage	V_R	5	V
Operating Temperature Range	T_{opr}	-40℃ to +80℃	
Storage Temperature Range	T_{stg}	-40℃ to +85℃	
Soldering Temperature	T_{sld}	260℃ for 5 Seconds	

Notes:
a. Derate linearly as shown in derating curve.
b. Duty Factor = 10%, Frequency = 1 kHz.

Electrical Optical Characteristics at Ta=25℃

Parameters	Symbol	Min.	Typ.	Max.	Unit	Test Condition
Luminous Intensity [a]	Iv	2200	3800	---	mcd	IF=20mA
Viewing Angle [b]	$2\theta_{1/2}$	---	30	---	deg.	IF=20mA
Peak Emission Wavelength	λp	---	468	---	nm	IF=20mA
Dominant Wavelength [c]	λd	---	470	---	nm	IF=20mA
Spectral Line Half-Width	△λ	---	25	---	nm	IF=20mA
Forward Voltage	VF	2.6	3.2	3.6	V	IF=20mA
Reverse Current	IR	---	---	10	μA	VR=5V

Notes:
a. Luminous intensity is measured with a light sensor and filter combination that approximates the CIE eye-response curve.
b. $2\theta_{1/2}$ is the o-axis angle where the luminous intensity is 1⁄2 the peak intensity.
c. The dominant wavelength (λd) is derived from the CIE chromaticity diagram and represents the single wavelength which defines the color of the device.

chanhvinh.com

LED

Typical Electrical / Optical Characteristics Curves (25℃ Ambient Temperature Unless Otherwise Noted)

Spectrum Distribution

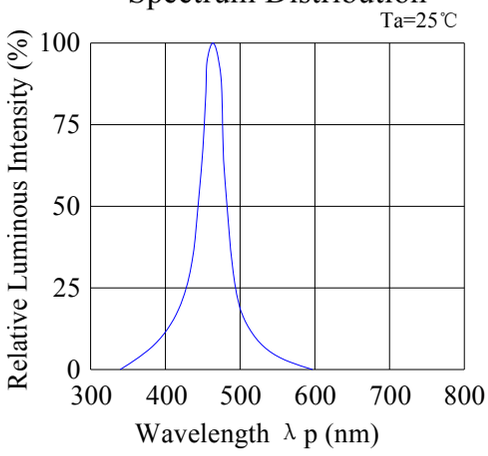

Forward Current & Forward Voltage

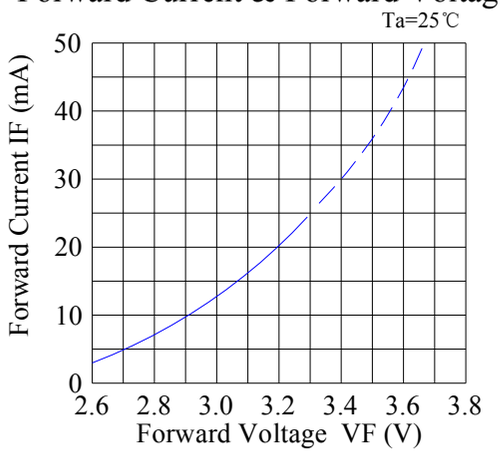

Luminous Intensity & Ambient Temperature

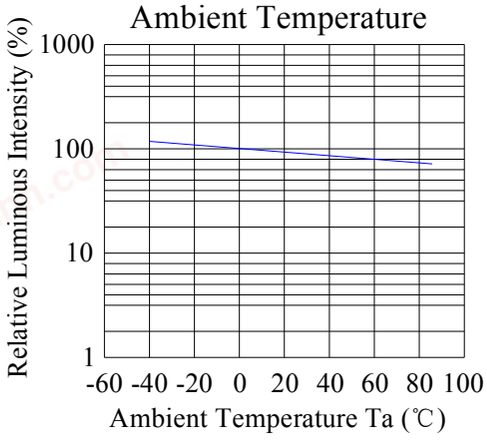

Luminous Intensity & Forward Current

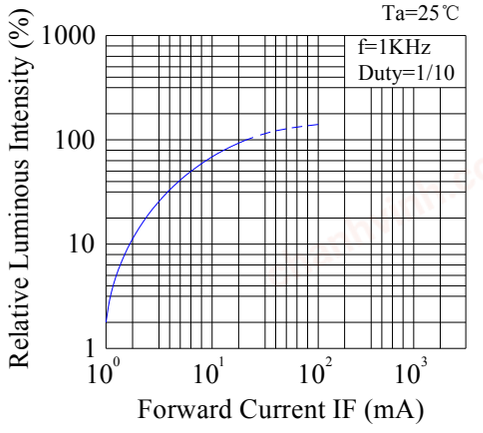

Forward Current Derating Curve

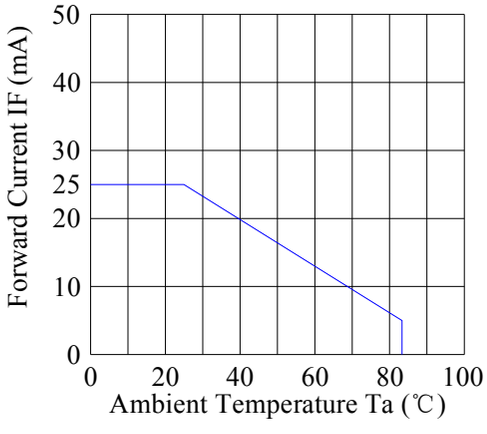

Radiation Diagram

