chanhvinh.com

User's Manual

32

SH7268 Group, SH7269 Group

User's Manual: Hardware

Renesas 32-Bit RISC Microcomputer
SuperH™ RISC engine Family / SH7260 Series

SH7268 R5S7268
SH7269 R5S7269

Renesas Electronics
www.renesas.com

Rev.2.00 Sep 2012

chanhvinh.com
chanhvinh.com
chanhvinh.com
chanhvinh.com

chanhvinh.com

Notice

1. All information included in this document is current as of the date this document is issued. Such information, however, is subject to change without any prior notice. Before purchasing or using any Renesas Electronics products listed herein, please confirm the latest product information with a Renesas Electronics sales office. Also, please pay regular and careful attention to additional and different information to be disclosed by Renesas Electronics such as that disclosed through our website.
2. Renesas Electronics does not assume any liability for infringement of patents, copyrights, or other intellectual property rights of third parties by or arising from the use of Renesas Electronics products or technical information described in this document. No license, express, implied or otherwise, is granted hereby under any patents, copyrights or other intellectual property rights of Renesas Electronics or others.
3. You should not alter, modify, copy, or otherwise misappropriate any Renesas Electronics product, whether in whole or in part.
4. Descriptions of circuits, software and other related information in this document are provided only to illustrate the operation of semiconductor products and application examples. You are fully responsible for the incorporation of these circuits, software, and information in the design of your equipment. Renesas Electronics assumes no responsibility for any losses incurred by you or third parties arising from the use of these circuits, software, or information.
5. When exporting the products or technology described in this document, you should comply with the applicable export control laws and regulations and follow the procedures required by such laws and regulations. You should not use Renesas Electronics products or the technology described in this document for any purpose relating to military applications or use by the military, including but not limited to the development of weapons of mass destruction. Renesas Electronics products and technology may not be used for or incorporated into any products or systems whose manufacture, use, or sale is prohibited under any applicable domestic or foreign laws or regulations.
6. Renesas Electronics has used reasonable care in preparing the information included in this document, but Renesas Electronics does not warrant that such information is error free. Renesas Electronics assumes no liability whatsoever for any damages incurred by you resulting from errors in or omissions from the information included herein.
7. Renesas Electronics products are classified according to the following three quality grades: "Standard", "High Quality", and "Specific". The recommended applications for each Renesas Electronics product depends on the product's quality grade, as indicated below. You must check the quality grade of each Renesas Electronics product before using it in a particular application. You may not use any Renesas Electronics product for any application categorized as "Specific" without the prior written consent of Renesas Electronics. Further, you may not use any Renesas Electronics product for any application for which it is not intended without the prior written consent of Renesas Electronics. Renesas Electronics shall not be in any way liable for any damages or losses incurred by you or third parties arising from the use of any Renesas Electronics product for an application categorized as "Specific" or for which the product is not intended where you have failed to obtain the prior written consent of Renesas Electronics. The quality grade of each Renesas Electronics product is "Standard" unless otherwise expressly specified in a Renesas Electronics data sheets or data books, etc.
   - "Standard": Computers; office equipment; communications equipment; test and measurement equipment; audio and visual equipment; home electronic appliances; machine tools; personal electronic equipment; and industrial robots.
   - "High Quality": Transportation equipment (automobiles, trains, ships, etc.); traffic control systems; anti-disaster systems; anti-crime systems; safety equipment; and medical equipment not specifically designed for life support.
   - "Specific": Aircraft; aerospace equipment; submersible repeaters; nuclear reactor control systems; medical equipment or systems for life support (e.g. artificial life support devices or systems), surgical implantations, or healthcare intervention (e.g. excision, etc.), and any other applications or purposes that pose a direct threat to human life.
8. You should use the Renesas Electronics products described in this document within the range specified by Renesas Electronics, especially with respect to the maximum rating, operating supply voltage range, movement power voltage range, heat radiation characteristics, installation and other product characteristics. Renesas Electronics shall have no liability for malfunctions or damages arising out of the use of Renesas Electronics products beyond such specified ranges.
9. Although Renesas Electronics endeavors to improve the quality and reliability of its products, semiconductor products have specific characteristics such as the occurrence of failure at a certain rate and malfunctions under certain use conditions. Further, Renesas Electronics products are not subject to radiation resistance design. Please be sure to implement safety measures to guard them against the possibility of physical injury, and injury or damage caused by fire in the event of the failure of a Renesas Electronics product, such as safety design for hardware and software including but not limited to redundancy, fire control and malfunction prevention, appropriate treatment for aging degradation or any other appropriate measures. Because the evaluation of microcomputer software alone is very difficult, please evaluate the safety of the final products or system manufactured by you.
10. Please contact a Renesas Electronics sales office for details as to environmental matters such as the environmental compatibility of each Renesas Electronics product. Please use Renesas Electronics products in compliance with all applicable laws and regulations that regulate the inclusion or use of controlled substances, including without limitation, the EU RoHS Directive. Renesas Electronics assumes no liability for damages or losses occurring as a result of your noncompliance with applicable laws and regulations.
11. This document may not be reproduced or duplicated, in any form, in whole or in part, without prior written consent of Renesas Electronics.
12. Please contact a Renesas Electronics sales office if you have any questions regarding the information contained in this document or Renesas Electronics products, or if you have any other inquiries.

(Note 1) "Renesas Electronics" as used in this document means Renesas Electronics Corporation and also includes its majority-owned subsidiaries.

(Note 2) "Renesas Electronics product(s)" means any product developed or manufactured by or for Renesas Electronics.

chanhvinh.com

General Precautions on Handling of Product

1. Treatment of NC Pins

Note: Do not connect anything to the NC pins.
The NC (not connected) pins are either not connected to any of the internal circuitry or are used as test pins or to reduce noise. If something is connected to the NC pins, the operation of the LSI is not guaranteed.

2. Treatment of Unused Input Pins

Note: Fix all unused input pins to high or low level.
Generally, the input pins of CMOS products are high-impedance input pins. If unused pins are in their open states, intermediate levels are induced by noise in the vicinity, a pass-through current flows internally, and a malfunction may occur.

3. Processing before Initialization

Note: When power is first supplied, the product's state is undefined.
The states of internal circuits are undefined until full power is supplied throughout the chip and a low level is input on the reset pin. During the period where the states are undefined, the register settings and the output state of each pin are also undefined. Design your system so that it does not malfunction because of processing while it is in this undefined state. For those products which have a reset function, reset the LSI immediately after the power supply has been turned on.

4. Prohibition of Access to Undefined or Reserved Addresses

Note: Access to undefined or reserved addresses is prohibited.
The undefined or reserved addresses may be used to expand functions, or test registers may have been be allocated to these addresses. Do not access these registers; the system's operation is not guaranteed if they are accessed.

chanhvinh.com

Configuration of This Manual

This manual comprises the following items:

1. General Precautions on Handling of Product
2. Configuration of This Manual
3. Preface
4. Contents
5. Overview
6. Description of Functional Modules
   - CPU and System-Control Modules
   - On-Chip Peripheral Modules

     The configuration of the functional description of each module differs according to the module. However, the generic style includes the following items:

   i) Feature
   ii) Input/Output Pin
   iii) Register Description
   iv) Operation
   v) Usage Note

When designing an application system that includes this LSI, take notes into account. Each section includes notes in relation to the descriptions given, and usage notes are given, as required, as the final part of each section.

7. List of Registers
8. Electrical Characteristics
9. States and Handling of Pins
10. Appendix
    - Package Dimensions, etc.
11. Main Revisions and Additions in this Edition (only for revised versions)

The list of revisions is a summary of points that have been revised or added to earlier versions. This does not include all of the revised contents. For details, see the actual locations in this manual.

12. Index

chanhvinh.com

Preface

This LSI is an RISC (Reduced Instruction Set Computer) microcomputer which includes a Renesas-original RISC CPU as its core, and the peripheral functions required to configure a system.

Target Users: This manual was written for users who will be using this LSI in the design of application systems. Target users are expected to understand the fundamentals of electrical circuits, logical circuits, and microcomputers.

Objective: This manual was written to explain the hardware functions and electrical characteristics of this LSI to the target users.
Refer to the SH-2A, SH2A-FPU Software Manual for a detailed description of the instruction set.

Notes on reading this manual:

- In order to understand the overall functions of the chip
  Read the manual according to the contents. This manual can be roughly categorized into parts on the CPU, system control functions, peripheral functions and electrical characteristics.
- In order to understand the details of the CPU's functions
  Read the SH-2A, SH2A-FPU Software Manual.
- In order to understand the details of a register when its name is known
  Read the index that is the final part of the manual to find the page number of the entry on the register. The addresses, bits, and initial values of the registers are summarized in section 51, List of Registers.

chanhvinh.com

- Description of Numbers and Symbols

  Aspects of the notations for register names, bit names, numbers, and symbolic names in this manual are explained below.

(1) Overall notation

In descriptions involving the names of bits and bit fields within this manual, the modules and registers to which the bits belong may be clarified by giving the names in the forms "module name"."register name"."bit name" or "register name"."bit name".

(2) Register notation

The style "register name"_"instance number" is used in cases where there is more than one instance of the same function or similar functions.
[Example] CMCSR_0: Indicates the CMCSR register for the compare-match timer of channel 0.

(3) Number notation

Binary numbers are given as B'nnnn (B' may be omitted if the number is obviously binary), hexadecimal numbers are given as H'nnnn or 0xnnnn, and decimal numbers are given as nnnn.
[Examples] Binary: B'11 or 11
Hexadecimal: H'EFA0 or 0xEFA0
Decimal: 1234

(4) Notation for active-low

An overbar on the name indicates that a signal or pin is active-low.
[Example] $\overline{\text{WDTOVF}}$

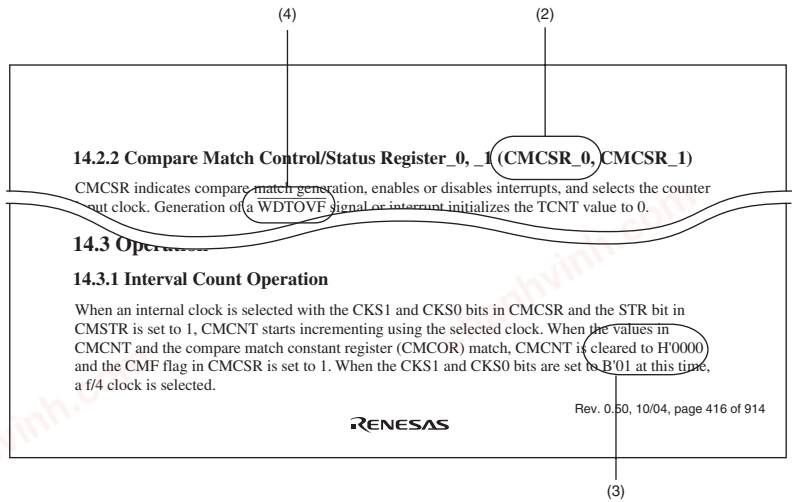

Note: The bit names and sentences in the above figure are examples and do not refer to specific data in this manual.

chanhvinh.com

- Description of Registers

  Each register description includes a bit chart, illustrating the arrangement of bits, and a table of bits, describing the meanings of the bit settings. The standard format and notation for bit charts and tables are described below.

[Bit Chart]

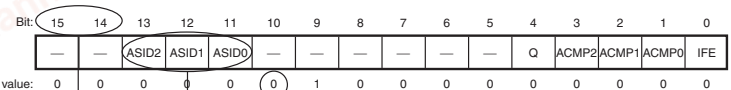

[Table of Bits]

(1) (2) (3) (4) (5)

Bit	Bit Name	Initial Value	R/W	Description
15	–	0	R	Reserved
14	–	0	R	These bits are always read as 0.
13 to 11	ASID2 to ASID0	All 0	R/W	Address Identifier These bits enable or disable the pin function.
10	–	0	R	Reserved This bit is always read as 0.
9	–	1	R	Reserved This bit is always read as 1.
	–	0		

Note: The bit names and sentences in the above figure are examples, and have nothing to do with the contents of this manual.

(1) Bit
Indicates the bit number or numbers.
In the case of a 32-bit register, the bits are arranged in order from 31 to 0. In the case of a 16-bit register, the bits are arranged in order from 15 to 0.

(2) Bit name
Indicates the name of the bit or bit field.
When the number of bits has to be clearly indicated in the field, appropriate notation is included (e.g., ASID[3:0]).
A reserved bit is indicated by "–".
Certain kinds of bits, such as those of timer counters, are not assigned bit names. In such cases, the entry under Bit Name is blank.

(3) Initial value
Indicates the value of each bit immediately after a power-on reset, i.e., the initial value.
0: The initial value is 0
1: The initial value is 1
–: The initial value is undefined

(4) R/W
For each bit and bit field, this entry indicates whether the bit or field is readable or writable, or both writing to and reading from the bit or field are impossible.
The notation is as follows:

R/W: The bit or field is readable and writable.
R/(W): The bit or field is readable and writable.
However, writing is only performed to flag clearing.
R: The bit or field is readable.
"R" is indicated for all reserved bits. When writing to the register, write the value under Initial Value in the bit chart to reserved bits or fields.
W: The bit or field is writable.

(5) Description
Describes the function of the bit or field and specifies the values for writing.

All trademarks and registered trademarks are the property of their respective owners.

chanhvinh.com

Main Revisions for This Edition

Revised items due to the version upgrade from Rev.1.00 to Rev.2.00

Item	Page	Revision (See Manual for Details)
1.1 SH7268/7269 Features	1	Description amended and note added This LSI has ...., video display controller 4, image renderer, display out comparison unit, OpenVG™*3-compliant Renesas graphics processor, JPEG codec unit, sampling rate converter, sound generator, SD host interface, MMC host interface, motor control PWM timer, interrupt controller modules, and general I/O ports. Notes: 3. OpenVG is a trademark of Khronos Group Inc.
Table 1.1 SH7268/7269 Features	6	Table amended **Items** — **Specification** SPI multi I/O bus controller — • Up to two serial flash memories with multiple I/O bus sizes (single/dual/quad) can be connected. • External address space read mode (built-in read cache) • SPI operating mode • Clock polarity and clock phase can be selected. • Maximum transfer rate: 533.33 Mbps (with two serial flash memories connected)
	8	IEBus™ controller — ... • Operating frequency — 1/2 divided clocks of 12 MHz or 12.58 MHz. — 1/3 divided clocks of 18 MHz or 18.87 MHz. — 1/4 divided clocks of 24 MHz or 25.16 MHz. — 1/5 divided clocks of 30 MHz or 31.45 MHz. — 1/6 divided clocks of 36 MHz or 37.74 MHz. — 1/7 divided clocks of 42 MHz or 44.03 MHz. — 1/8 divided clock of 48 MHz.

chanhvinh.com

Item	Page	Revision (See Manual for Details)
1.1 SH7268/7269 Features Table 1.1 SH7268/7269 Features	12	Table amended
		Video display controller 4: ... • Frame buffer Large-capacity on-chip RAM and external SDRAM can be used. Note: When using external SDRAM, display may not be possible if the bus bandwidth is insufficient. Therefore, it is recommended that the frame buffer be allocated in the large-capacity on-chip RAM.
	13	OpenVG™-compliant Renesas graphics processor: • OpenVG™, which is an open 2D vector graphics API, can be processed. • Processes can be accelerated in OpenVG™ stage 2 to stage 8 using the dedicated hardware and programmable shader. Note: When using the OpenVG™ graphics processor and JPEG codec unit at the same time, it is necessary to implement exclusive bus access control in software to ensure that they do not access the bus simultaneously. Operation cannot be guaranteed if the OpenVG™ graphics processor and JPEG codec unit access the bus simultaneously.
		JPEG codec unit: • Compression and decompression method conforming to the JPEG baseline standard within the range described in this document. • Operational precision: Conforming to JPEG Part 2, ISO-IEC10918-2 • Pixel format: Compression: YCbCr422 Decompression: YCbCr444, YCbCr422, YCbCr411, YCbCr420 Output pixel format to the buffer: YCbCr422, ARGB8888, RGB565 • Four quantization tables provided • Four Huffman tables provided (two tables for AC coefficients and two tables for DC coefficients) • Markers supported: SOI, SOF0, SOS, DQT, DHT, DRI, RSTm, and EOI • Image data rate: Max. 133.33 Mbytes/s (at 66.67-MHz operation)
1.3 Block Diagram Figure 1.1 Block Diagram	17	Figure amended

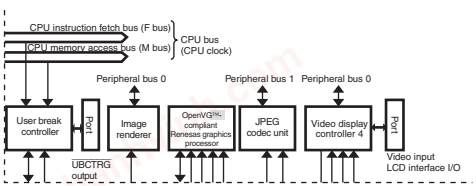

chanhvinh.com

Item	Page	Revision (See Manual for Details)
1.5 Pin Functions Table 1.3 Pin Functions	26	Table amended

Classification	Symbol	I/O	Name	Function
Realtime clock	RTC_X1	I	Crystal resonator for realtime clock/ external clock	Connected to 32.768-kHz crystal resonator. The RTC_X1 pin can also be used to input an external clock. The RTC_X1 and RTC_X2 pins are not implemented on the SH7268.
	RTC_X2	O		
Renesas quad serial peripheral interface	QMO_0/QIO0_0, QMO_1/QIO0_1	I/O	Data	Data I/O pins.
	QMI_0/QIO1_0, QMI_1/QIO1_1	I/O	Data	Data I/O pins.
	QIO2_0, QIO2_1	I/O	Data	Data I/O pins.
	QIO3_0, QIO3_1	I/O	Data	Data I/O pins.
	QSPCLK_0, QSPCLK_1	O	Clock	Clock output pins.
	QSSL_0, QSSL_1	O	Slave select	Slave select output pins.

	31	

Video display controller 4	LCD_DATA23 to LCD_DATA0	O	Output data	Data output pins for panel.
	LCD_TCON6 to LCD_TCON0	O	Panel timing adjustment output	Output pins for panel timing adjustment
	LCD_CLK	O	Panel clock	Panel clock output pin.
	LCD_EXTCLK	I	Panel clock source	Panel clock source input pin.
	DV_DATA23 to DV_DATA0	I	Input data	Data input pins for graphics data. Only DV_DATA_7 to DV_DATA0 can be used in the SH7268 Group.

1.6 List of Pins Table 1.4 List of Pins	48	Table amended

SH7268 Pin No.	SH7269 Pin No.	SH7269 BGA Pin No.	Function 5 Symbol	Function 5 I/O
175	211	A14	RxD2	I(s)
176	212	B13	TxD2	O
—	213	—		
—	214	C13	PWM2C	O
—	215	—		
177	216	A13	IRQ4	I(s)

5.8 Notes on Board Design 5.8.1 Note on Using a PLL Oscillation Circuit	139	Description added

... To prevent such malfunction, the analog power supply pins and the digital power supply pins Vcc and PVcc should not supply the same resources on the board if at all possible.

Ensure that PLLVcc has the same electric potential as PVcc.

chanhvinh.com

Item	Page	Revision (See Manual for Details)
Section 7 Interrupt Controller 7.1 Features Figure 7.1 Block Diagram	168	Figure amended 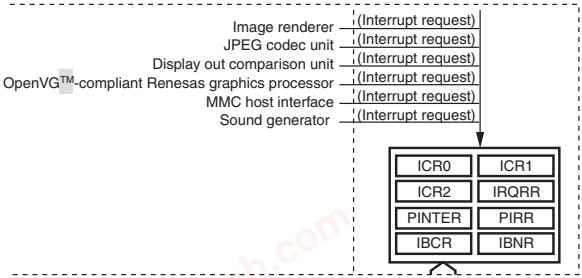
7.3.1 Interrupt Priority Registers 01, 02, 05 to 26 (IPR01, IPR02, IPR05 to IPR26) Table 7.3 Interrupt Request Sources and IPR01, IPR02, and IPR05 to IPR26	172	Table amended **Register Name** / **Bits 15 to 12** / **Bits 11 to 8** / **Bits 7 to 4** / **Bits 3 to 0** IPR11 / Image renderer / JPEG codec unit / Display out comparison unit / OpenVG™-compliant Renesas graphics processor
7.4.6 On-Chip Peripheral Module Interrupts	187	Description amended ... • JPEG codec unit • OpenVG™-compliant Renesas graphics processor • Compare match timer
Table 7.4 Interrupt Exception Handling Vectors and Priorities	194	Table amended **Interrupt Source** JPEG codec unit / JEDI / 181 JDTI / 182 Display out comparison unit / CMPI / 183 OpenVG™-compliant Renesas graphics processor / INT3 / 184 INT2 / 185

chanhvinh.com

Item	Page	Revision (See Manual for Details)
10.4.3 CSn Space Wait Control Register (CSnWCR) (n = 0 to 5) (1) Normal Space, SRAM with Byte Selection, and MPX-I/O • CS5WCR	297	Table amended Bit: 12, 11 — Bit Name: SW[1:0] — Initial Value: 00 — R/W: R/W Description: Number of Delay Cycles from Address, CS5 Assertion to RD, WE Assertion These bits specify the number of delay cycles from address and CS5 assertion to RD and WEn assertion when area 5 is specified as normal space or SRAM with byte selection. They specify the number of delay cycles from address cycle (Ta3) to RD and WEn assertion when area 5 is specified as MPX-I/O. 00: 0.5 cycles 01: 1.5 cycles 10: 2.5 cycles 11: 3.5 cycles
	298	Bit: 1, 0 — Bit Name: HW[1:0] — Initial Value: 00 — R/W: R/W Description: Delay Cycles from RD, WEn Negation to Address, CS5 Negation These bits specify the number of delay cycles from RD and WEn negation to address and CS5 negation when area 5 is specified as normal space or SRAM with byte selection. They specify the number of delay cycles from RD and WEn negation to CS5 negation when area 5 is specified as MPX-I/O. 00: 0.5 cycles 01: 1.5 cycles 10: 2.5 cycles 11: 3.5 cycles
10.5.5 MPX-I/O Interface	338	Description added The data cycle is the same as that in a normal space access. The delay cycles specified by SW[1:0] are inserted between the Ta3 and T1 cycles. The delay cycles specified by HW[1:0] are added after the T2 cycle. Timing charts are shown in figures 10.11 to 10.13.
Figure 10.11 (1) Access Timing for MPX Space (Address Cycle No Wait, Data Cycle No Wait)	339	Figure title amended
Figure 10.11 (2) Access Timing for MPX Space (Address Cycle No Wait, Assert Extension Cycle 1.5, Data Cycle No Wait, Negate Extension Cycle 1.5)	340	Figure added
10.5.6 SDRAM Interface (3) Burst Read	358	Description amended ... • 16-byte transfer in the direct memory access controller • 32-byte transfer in the OpenVG™-compliant Renesas graphics processor, image renderer, and video display controller 4

chanhvinh.com

Item	Page	Revision (See Manual for Details)
10.5.12 Bus Arbitration	406	Description amended 6. 32-byte transfer by the OpenVG™-compliant Renesas graphics processor, image renderer, and video display controller 4
10.5.13 Others (3) On-Chip Peripheral Module Access	411	Description amended For example, a case is described here in which the system is transferring to the software standby mode for power savings. To make this transition, the SLEEP instruction must be performed after setting the STBY bit in the STBCR1 register to 1. However a dummy read of the STBCR1 register is required before executing the SLEEP instruction. If a dummy read is omitted, the CPU executes the SLEEP instruction before the STBY bit is set to 1, thus the system enters sleep mode not software standby mode. A dummy read of the STBCR1 register is indispensable to complete writing to the STBY bit.
11.3.9 DMA Extension Resource Selectors 0 to 7 (DMARS0 to DMARS7) Table 11.3 DMARS Settings	447	Table amended Peripheral Module: SD interface 1 Setting Value for One Channel ({MID, RID}): H'A9 / H'AA MID: B'101010
12.3.16 Timer Output Master Enable Register (TOER)	530	Description amended TOER is an 8-bit readable/writable register that enables/disables output settings for output pins TIOC4D, TIOC4C, TIOC3D, TIOC4B, TIOC4A, and TIOC3B. These pins do not output correctly if the TOER bits have not been set. Set TOER of CH3 and CH4 prior to setting TIOR of CH3 and CH4. Set TOER when count operation of TCNT channels 3 and 4 is halted.

chanhvinh.com

Item	Page	Revision (See Manual for Details)
12.3.17 Timer Output Control Register 1 (TOCR1)	533	Table amended and note added

Bit	Bit Name	Initial value	R/W	Description
1	OLSN	0	R/W	Output Level Select N*2 *4 This bit selects the reverse phase output level in reset-synchronized PWM mode/complementary PWM mode. See table 12.28.
0	OLSP	0	R/W	Output Level Select P*2 This bit selects the positive phase output level in reset-synchronized PWM mode/complementary PWM mode. See table 12.29.

Notes: 1. Setting the TOCL bit to 1 prevents accidental modification when the CPU goes out of control.
2. Clearing the TOCS0 bit to 0 makes this bit setting valid.
3. After power-on reset, 1 can be written only once. After 1 has been written, 0 cannot be written.
4. If there is no dead time, the reverse phase output is the inversion of the forward phase. Set OLSP and OLSN to the same value.

12.3.18 Timer Output Control Register 2 (TOCR2)	536	Table note amended Note: * Setting the TOCS bit in TOCR1 to 1 makes this bit setting valid. If there is no dead time, the reverse phase output is the inversion of the forward phase. Set OLSiP and OLSiN to the same value (i = 1, 2, or 3).
12.4.2 Synchronous Operation	557	Description amended Channels 0 to 4 can all be designated for synchronous operation.
12.4.4 Cascaded Operation	563	Description amended For simultaneous input capture of TCNT_1 and TCNT_2 during cascaded operation, additional input capture input pins can be specified by the input capture control register (TICCR). The edge detection that is the condition for input capture uses a signal representing the logical OR of the original input pin and the added input pins. For details, see (4) Cascaded Operation Example (c). For input capture...
(4) Cascaded Operation Example (c) Figure 12.23 Cascaded Operation Example (c)	566	Figure amended

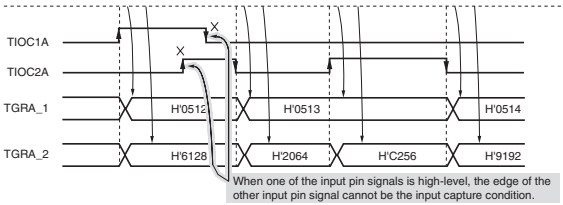

chanhvinh.com

Item	Page	Revision (See Manual for Details)
12.4.5 PWM Modes • PWM mode 2	568	Description amended PWM output is generated using one TGR as the cycle register and the others as duty registers. The output specified in TIOR is performed by means of compare matches. Upon counter clearing by a cycle register compare match, the output value of each pin is the initial value set in TIOR. If the set values of the cycle and duty registers are identical, the output value does not change when a compare match occurs.
12.4.8 Complementary PWM Mode (1) Example of Complementary PWM Mode Setting Procedure Figure 12.38 Example of Complementary PWM Mode Setting Procedure	586	Figure amended 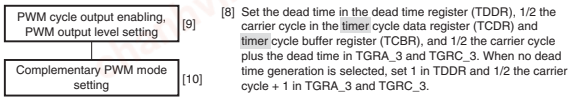
(2) Outline of Complementary PWM Mode Operation (j) Complementary PWM Mode PWM Output Generation Method	599	Description amended A PWM waveform is generated by output of the output level selected in the timer output control register in the event of a compare-match between a counter and compare register. While TCNTS is counting, compare register and temporary register values are simultaneously compared to create consecutive PWM pulses from 0 to 100%. ...
(k) Complementary PWM Mode 0% and 100% Duty Output	604	Description amended 100% duty output is performed when the compare register value is set to H'0000. The waveform in this case has a positive phase with a 100% on-state. 0% duty output is performed when the compare register value is set to the same value as TGRA_3. The waveform in this case has a positive phase with a 100% off-state.
14.5.6 Internal Reset In Watchdog Timer Mode	718	Newly added

chanhvinh.com

Item	Page	Revision (See Manual for Details)
16.1 Features	752	Description amended .... • In asynchronous mode, on-chip modem control functions ($\overline{RTS}$ and $\overline{CTS}$) (only channel 1 on SH7268, only channels 1, 5, and 7 on SH7269).
	753	Description amended Figure 16.1 shows a block diagram. Note that some channels do not have $\overline{CTS}$ and $\overline{RTS}$ pins.
16.3.9 FIFO Control Register (SCFCR)	784	Table amended Bit: 3 — Bit Name: MCE — Initial Value: 0 — R/W: R/W — Description: Modem Control Enable Enables modem control signals $\overline{CTS}$ and $\overline{RTS}$. The MCE bit should always be cleared to 0 for channels 0 and 2 to 7 on the SH7268 and channels 0, 2, 3, 4, and 6 on the SH7269, and when in clock synchronous mode on the SH7268 and SH7269 regardless of the channel. 0: Modem signal disabled* 1: Modem signal enabled Note: * $\overline{CTS}$ is fixed at active 0 regardless of the input value, and $\overline{RTS}$ is also fixed at 0.
16.4.1 Overview	791	Description amended This module has a 16-stage FIFO buffer for both transmission and receptions, reducing the overhead of the CPU, and enabling continuous high-speed communication. Furthermore, channel 1 on the SH7268, and channels 1, 5, and 7 on the SH7269, have $\overline{RTS}$ and $\overline{CTS}$ signals for use as modem control signals.
16.4.2 Operation in Asynchronous Mode (3) Transmitting and Receiving Data	800	Description amended 4. When modem control is enabled on channel 1 on the SH7268, or on channel 1, 5, or 7 on the SH7269, transmission can be stopped and restarted in accordance with the $\overline{CTS}$ input value. When ...
	804	Description amended 5. When modem control is enabled on channel 1 on the SH7268, or on channel 1, 5, or 7 on the SH7269, the $\overline{RTS}$ signal is output when SCFRDR is empty. When ...

chanhvinh.com

Item	Page	Revision (See Manual for Details)
17.4.3 System Configuration Example (3) Master/Multi-Slave (with This LSI Acting as Slave) Figure 17.5 Master/Multi-Slave Configuration Example (This LSI = Slave)	855	Figure amended 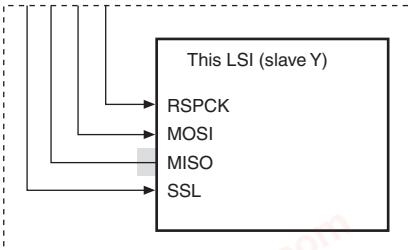
17.4.5 Data Format (2) MSB First Transfer (16-Bit Data) Figure 17.9 MSB First Transfer (16-Bit Data)	861	Figure amended 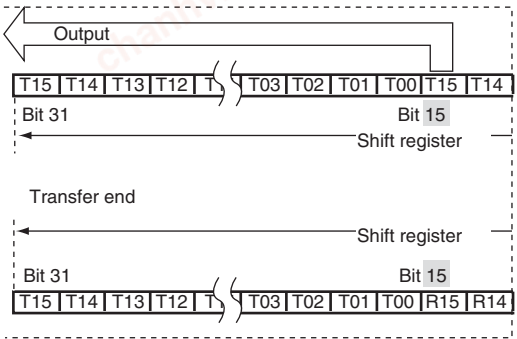
(3) MSB First Transfer (8-Bit Data) Figure 17.10 MSB First Transfer (8-Bit Data)	863	Figure amended 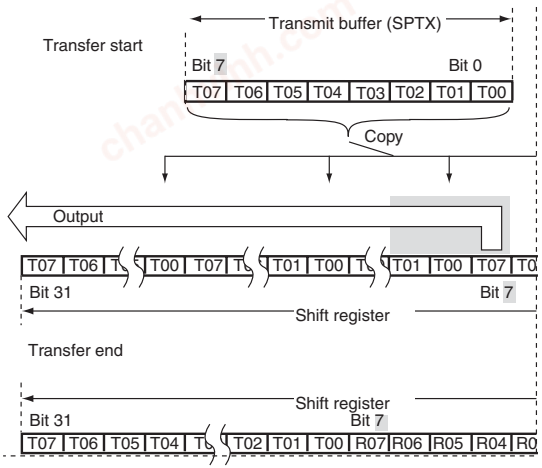

chanhvinh.com

Item	Page	Revision (See Manual for Details)
17.4.5 Data Format (5) LSB First Transfer (16-Bit Data) Figure 17.12 LSB First Transfer (16-Bit Data)	867	Figure amended 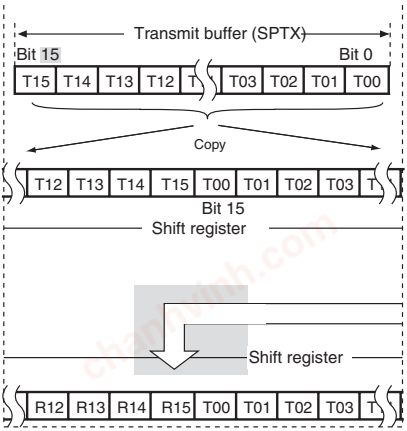
(6) LSB First Transfer (8-Bit Data) Figure 17.13 LSB First Transfer (8-Bit Data)	869	Figure amended 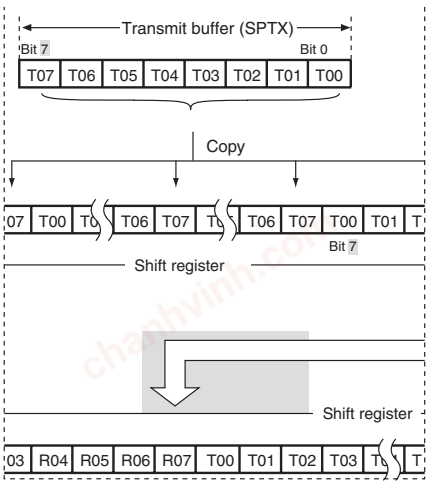
17.4.8 SPI Operation (1) Multi-Master Mode Operation (c) Sequence Control Figure 17.15 Determination Procedure of Serial Transfer Mode in Master Mode	877	Figure amended 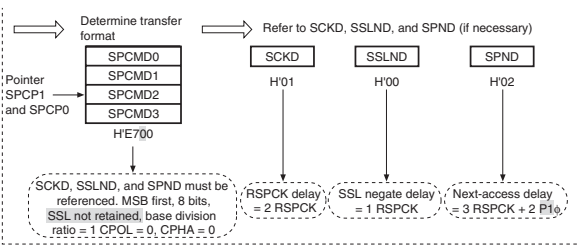

chanhvinh.com

Item	Page	Revision (See Manual for Details)
18.3 Register Descriptions Table 18.2 Register Configuration	896	Table and table note amended

Channel	Register Name	Abbreviation	R/W	Initial Value	Address	Access Size
0	Control register_0	SPCR_0	R/W	H'00	H'E8033800	8, 16, 32
	Slave select polarity register_0	SSLP_0	R/W	H'00	H'E8033801	8, 16, 32
	Pin control register_0	SPPCR_0	R/W	H'06	H'E8033802	8, 16, 32
	Status register_0	SPSR_0	R	H'60	H'E8033803	8, 16, 32
	Buffer data count register_0	SPBDCR_0	R	H'0000	H'E803381A	16, 32
	Transfer data length multiplier setting register 0_0	SPBMUL0_0	R/W	H'00000001	H'E803381C	32

	897	

Channel	Register Name	Abbreviation	R/W	Initial Value	Address	Access Size
1	Control register_1	SPCR_1	R/W	H'00	H'E8034000	8, 16, 32
	Slave select polarity register_1	SSLP_1	R/W	H'00	H'E8034001	8, 16, 32
	Pin control register_1	SPPCR_1	R/W	H'06	H'E8034002	8, 16, 32
	Status register_1	SPSR_1	R	H'60	H'E8034003	8, 16, 32
	Buffer data count register_1	SPBDCR_1	R	H'0000	H'E803401A	16, 32

	898	Note : In the description of the register names, the channel is omitted.
18.3.8 Bit Rate Register (SPBR) Table 18.3 Relationship between SPBR and BRDV1 and BRDV0 Settings	910	Table amended

Bit Rate	
P1ϕ = 50 MHz	**P1ϕ = 66.67 MHz**
50.0 Mbps	66.67 Mbps
25.0 Mbps	33.33 Mbps
12.50 Mbps	16.67 Mbps

18.3.15 Buffer Data Count Register (SPBDCR)	923	Title amended
18.4.5 Non-Normal Transfer Operations	938	Description amended On operation A shown in table 18.8, whether SPDR can be written to or not can be checked using the transmit data byte counter bits (TXBC[5:0]) in the buffer data count register (SPBDCR).

chanhvinh.com

Item	Page	Revision (See Manual for Details)
19.4 Register Descriptions	958	Table amended

Table 19.2 Register Configuration

Register Name	Abbreviation	R/W	Initial Value	Address	Access Size
Common control register	CMNCR	R/W	H'00AA4000	H'FFFC1C00	32
SSL delay register	SSLDR	R/W	H'00000000	H'FFFC1C04	32
Bit rate register	SPBCR	R/W	H'00000003	H'FFFC1C08	32
Data read control register	DRCR	R/W	H'00000000	H'FFFC1C0C	32
Data read command setting register	DRCMR	R/W	H'00000000	H'FFFC1C10	32
Data read extended address setting register	DREAR	R/W	H'00000000	H'FFFC1C14	32
Data read option setting register	DROPR	R/W	H'00000000	H'FFFC1C18	32
Data read enable setting register	DRENR	R/W	H'00004700	H'FFFC1C1C	32
SPI mode control register	SMCR	R/W	H'00000000	H'FFFC1C20	32
SPI mode command setting register	SMCMR	R/W	H'00000000	H'FFFC1C24	32
SPI mode address setting register	SMADR	R/W	H'00000000	H'FFFC1C28	32
SPI mode option setting register	SMOPR	R/W	H'00000000	H'FFFC1C2C	32
SPI mode enable setting register	SMENR	R/W	H'00004000	H'FFFC1C30	32
SPI mode read data register 0	SMRDR0	R	Undefined	H'FFFC1C38	8, 16, 32
SPI mode read data register 1	SMRDR1	R	Undefined	H'FFFC1C3C	8, 16, 32
SPI mode write data register 0	SMWDR0	R/W	H'00000000	H'FFFC1C40	8, 16, 32
SPI mode write data register 1	SMWDR1	R/W	H'00000000	H'FFFC1C44	8, 16, 32
Common status register	CMNSR	R	H'00000001	H'FFFC1C48	32

19.4.4 Data Read Control Register (DRCR)	969	Table amended

Bit	Bit Name	Initial Value	R/W	Description
9	RCF	0	W	Read Cache Flush When 1 is written to this bit, all the entries in the read cache are cleared. This bit is always read as 0. Note: After writing 1 to the RCF bit to clear the read cache, perform the external address space read after reading the contents of the DRCR register.

19.4.9 SPI Mode Control Register (SMCR)	978	Table amended

Bit	Bit Name	Initial Value	R/W	Description
0	SPIE	0	W	SPI Data Transfer Enable Data is transferred by setting this bit to 1. This bit is enabled only when the TEND bit in CMNSR is set to 1. The operation cannot be guaranteed when this bit is set to 1 with the TEND bit set to 0. If this bit is set to 1 at the t3 period, data transfer is started after the end of the t3 period. This bit is always read as 0. Note: When SPBSSL is negated, the command, optional command, address, and option data that are output enabled are output even if the SPIRE and SPIWE bits are cleared to 0.

chanhvinh.com

Item	Page	Revision (See Manual for Details)
19.5.6 External Address Space Read Mode (4) Initial Setting Flow Figure 19.10 Example of Initial Setting Flow in External Address Space Read Mode	999	Figure amended 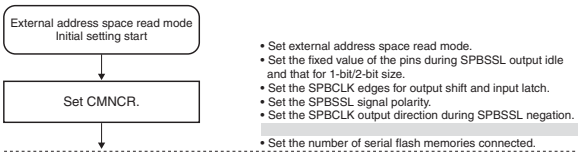
19.5.8 SPI Operating Mode (4) Initial Setting Flow Figure 19.14 Example of Initial Setting Flow in SPI Operating Mode	1004	Figure amended 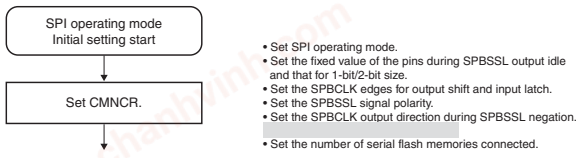
19.6 Usage Note 19.6.1 Note on Transfer Start from SPBSSL Hold State in SPI Operation Mode	1019	Newly added
20.3.10 NF2CYC Register (NF2CYC)	1039	Table amended **Bit** | **Bit Name** | **Initial Value** | **R/W** | **Description** 4 | CKS4 | 0 | R/W | Transfer Clock Select This bit should be set according to the necessary transfer rate (table 20.3) in master mode.
21.2 Input/Output Pins Table 21.1 Pin Assignments	1065	Table amended and table note added

Channel	Pin Name	I/O	Description
0	SSISCK0*	I/O	Serial bit clock
	SSIWS0*	I/O	Word selection
	SSITxD0	Output	Serial data output
	SSIRxD0*	Input	Serial data input
1 to 5	SSISCK1 to SSISCK5*	I/O	Serial bit clock
	SSIWS1 to SSIWS5*	I/O	Word selection
	SSIDATA1 to SSIDATA5*	I/O	Serial data input/output
Common	AUDIO_CLK	Input	External clock for audio (input oversampling clock)
	AUDIO_X1	Input	Crystal resonator/external clock for audio (input oversampling clock)
	AUDIO_X2	Output	

Note: * It is possible to select whether or not to use the noise canceler function in the input path when in slave mode. For details, see 48.2.34, Serial Sound Interface Noise Canceler Control Register (SNCR).

chanhvinh.com

Item	Page	Revision (See Manual for Details)
21.4.6 Transmit Operation (1) Transmission Using Direct Memory Access Controller Figure 21.23 Transmission Using Direct Memory Access Controller	1107	Figure amended

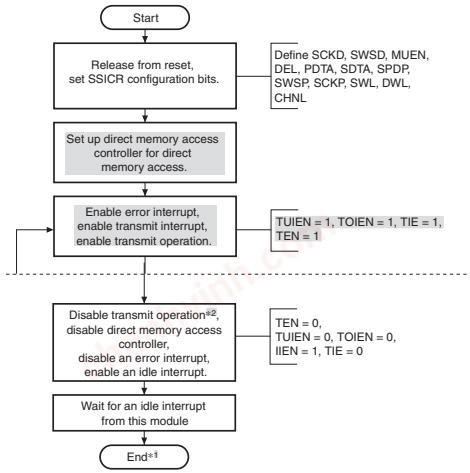

Notes: 1. If an error interrupt (underflow/overflow) occurs, go back to the start in the flowchart again.
2. When restarting transmission after disabling transmit operation (TEN = 0) while WS continue mode is disabled, first apply a software reset before going back to start in the flowchart.

(2) Transmission Using Interrupt-Driven Data Flow Control Figure 21.24 Transmission Using Interrupt-Driven Data Flow Control	1108	Figure amended

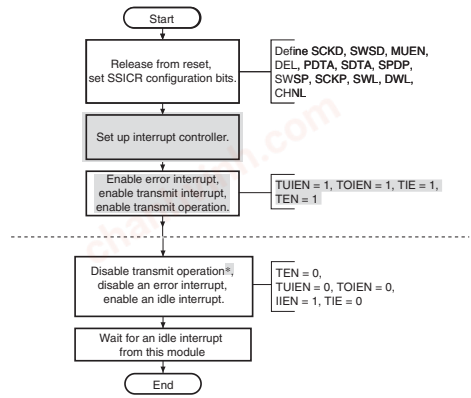

Notes: * When restarting transmission after disabling transmit operation (TEN = 0) while WS continue mode is disabled, first apply a software reset before going back to start in the flowchart.

chanhvinh.com

Item	Page	Revision (See Manual for Details)
21.4.7 Receive Operation (1) Reception Using Direct Memory Access Controller Figure 21.25 Reception Using Direct Memory Access Controller	1110	Figure amended 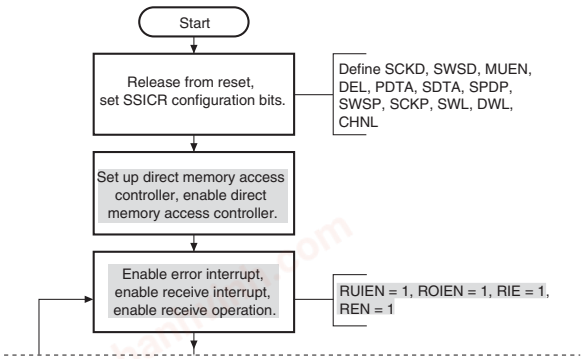
(2) Reception Using Interrupt-Driven Data Flow Control Figure 21.26 Reception Using Interrupt-Driven Data Flow Control	1111	Figure amended 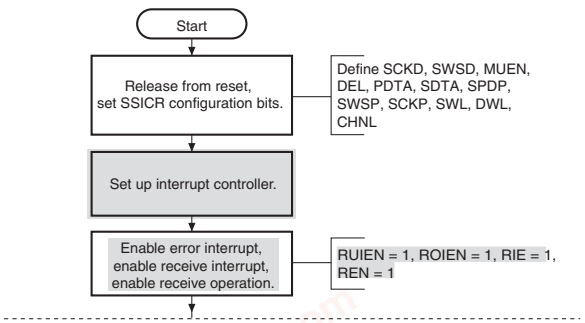
23.2 Architecture	1160	Description amended **Important:** LongWord (32-bit) access must be implemented as 2 consecutive word (16-bit) accesses. In this manual, LongWord access means the two consecutive accesses.

chanhvinh.com

Item	Page	Revision (See Manual for Details)
27.3.2 A/D Control/Status Register (ADCSR)	1442 to 1445	Table amended

Bit	Bit Name	Initial Value	R/W	Description
15	ADF	0	R/(W)*1	A/D End Flag Status flag indicating the end of A/D conversion. [Clearing conditions] • Cleared by reading ADF while ADF = 1, then writing 0 to ADF • Cleared when the direct memory access controller is activated by ADI interrupt and ADDR is read [Setting conditions] • A/D conversion ends in single mode • A/D conversion ends for the selected channels in multi mode • A/D conversion ends for the selected channels in scan mode
8 to 6	CKS[2:0]	000	R/W	Clock Select These bits select the A/D conversion time.*2 Set the A/D conversion time while A/D conversion is halted (ADST = 0). 000: Conversion time = 412 t_{cyc} (maximum) 001: Conversion time = 480 t_{cyc} (maximum) 010: Conversion time = 548 t_{cyc} (maximum) 011, 100, 101, 110, 111: Setting prohibited
2 to 0	CH[2:0]	000	R/W	Channel Select These bits and the MDS bits in ADCSR select the analog input channels.

MDS = 0xx	MDS = 100 or MDS = 110	MDS = 101 or MDS = 111
000: AN0	000: AN0	000: AN0
001: AN1	001: AN0, AN1	001: AN0, AN1
010: AN2	010: AN0 to AN2	010: AN0 to AN2
011: AN3	011: AN0 to AN3	011: AN0 to AN3
100: AN4	100: AN4	100: AN0 to AN4
101: AN5	101: AN4, AN5	101: AN0 to AN5
110: AN6*3	110: AN4 to AN6*3	110: AN0 to AN6*3
111: AN7*3	111: AN4 to AN7*3	111: AN0 to AN7*3

[Legend]
x: Don't care
Notes: 1. Only 0 can be written to clear the flag after 1 is read.
2. Set the A/D conversion time to minimum or more values to meet the absolute accuracy of the A/D conversion characteristics.
3. Settings prohibited in the SH7268 Group.

27.7.6 Influences on Absolute Precision	1463	Description amended Care is also required to insure that filter circuits do not interfere with digital signals on the mounting board (i.e., acting as antennas).
27.7.7 A/D Conversion in Deep Standby Mode		Description deleted

chanhvinh.com

Item	Page	Revision (See Manual for Details)
29.3.1 System Configuration Control Register (SYSCFG)	1519	Table amended

Bit	Bit Name	Initial Value	R/W	Description
0	USBE	0	R/W	USB Module Operation Enable Enables or disables operation of this module. 0: USB module operation is disabled. 1: USB module operation is enabled. Modifying this bit from 1 to 0 initializes some register bits as listed in tables 29.3 and 29.4. This bit should be modified while SCKE is 1. When the host controller function is selected, this bit should be set to 1 after setting DRPD to 1, eliminating LNST bit chattering, and checking that the USB bus has been settled.

29.3.5 Test Mode Register (TESTMODE)	1530	Table amended

Bit	Bit Name	Initial Value	R/W	Description
3 to 0	UTST[3:0]	0000	R/W	(1) When the host controller function is selected These bits can be set after writing 1 to DRPD. This module outputs waveforms when both DRPD and UACT are set to 1. This module also performs high-speed termination after the UTST bits are written to. • Procedure for setting the UTST bits 1. Power-on reset. 2. Start the clock supply (Set SCKE to 1 after the crystal oscillation and the PLL for USB are settled). 3. Set DCFM and DRPD to 1 (setting HSE to 1 is not required). 4. Set USBE to 1. 5. Set the UTST bits to the appropriate value according to the test specifications. 6. Set the UACT bit to 1.

29.4.3 Pipe Control Table 29.17 Pipe Setting Items	1667	Table amended

Register Name	Bit Name	Setting Contents	Remarks
DCPMAXP PIPEMAXP	DEVSEL	Selects a device	Referenced only when the host controller function is selected.
	MXPS	Maximum packet size	Compliant with the USB standard.
PIPEPERI	IFIS	Buffer flush	PIPE1 and PIPE2: Can be set (only when isochronous transfer has been selected) PIPE3 to PIPE9: Cannot be set

30.4.5 Sync Separation Control Register 1 (SYNSCR1) (3) Reference Level Operation Speed Control for Sync Separation	1733	Description deleted If sync skew is caused by sync sag, it can be improved by raising the determination speed using VELOCITYSHIFT_H.

chanhvinh.com

Item	Page	Revision (See Manual for Details)
30.4.9 Sync Separation Control Register 5 (SYNSCR5) (2) Vertical Sync Separation Control Table 30.10 Recommended Threshold and Serration Pulse Width (for reference)	1742	Table amended Serration Pulse Width [µsec] / VSYNCSLICE[4:0] 525i/59.94Hz: 27.08 / 10 625i/50Hz: 27.30 / 10
30.4.10 Horizontal AFC Control Register 1 (HAFCCR1) (1) Horizontal AFC Loop Gain Control	1743	Description deleted HAFCGAIN sets the loop gain (response speed) of the horizontal AFC. The larger the value is, the faster the response speed is. However, setting a larger value will result in more susceptibleness to noise.
30.4.24 Burst Gate Pulse Control Register (BTGPCR)	1768	Table amended Bit / Bit Name / Initial Value / R/W / Description 14 to 8 / BGPWIDTH [6:0] / 0100100 / R/W / Burst Gate Pulse Width Specify the offset from the 64th clock pulse width in 27-MHz clock cycle units. 7 to 0 / BGPSTART [7:0] / 10000010 / R/W / Burst Gate Pulse Start Position Specify the position from the horizontal sync signal reference in 27-MHz clock cycle units.
30.4.25 ACC Control Register 1 (ACCCR1)	1770	Table amended Bit / Bit Name / Initial Value / R/W / Description 8 to 0 / ACCLEVEL [8:0] / 100100100 / R/W / ACC Reference Color Burst Amplitude Valid when ACCMODE = 0 (auto gain setting). Set Peak-to-Peak amplitude in 1-LSB units.
30.4.28 TINT Control Register (TINTCR) (1) R-Y Axis Correction Control Figure 30.20 Example of R-Y Axis Correction	1777	Figure amended 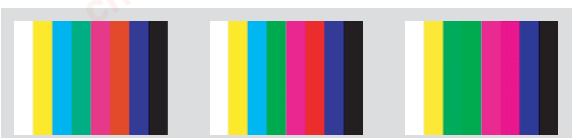 R-Y Axis offset +11.25 [deg.] (Max: +11.25 [deg.]) Normal (Center) R-Y Axis offset −11.25 [deg.] (Max: −11.25 [deg.])
(2) Hue Adjustment (TINT) Correction Control Figure 30.21 Example of Hue Adjustment (TINT) Correction	1778	Figure amended 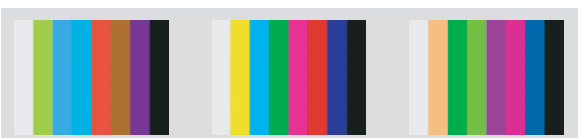 +45 [deg.] (Max: +180 [deg.]) Normal (Center) −45 [deg.] (Max: −180 [deg.])

chanhvinh.com

Item	Page	Revision (See Manual for Details)
30.4.30 AGC Control Register 1 (AGCCR1) (2) AGC Response Speed Control	1782	Description amended The recommended value is 4 to avoid a malfunction caused by trick playback of VCR (fast-forward play/rewind play) or a weak electric field.
30.5.2 A/D Converter for Video Signal Input Figure 30.27 A/D Conversion Image	1847	Figure amended 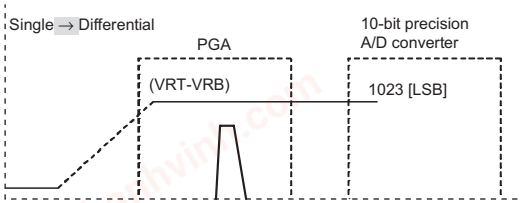
30.5.3 Sync Separator Circuit (2) Noise Reduction Low-Pass Filter (LPF) for Horizontal Sync	1850	Description amended The noise reduction LPF reduces the superimposed noise on the video signals before composite sync signal separation. The LPFs can be separately set for the horizontal sync and vertical sync. The cutoff frequency of the horizontal sync LPF can be set using SYNSCR1.LPFHSYNC[2:0]. The cutoff frequency should be within a range that assures that the composite sync signal components are not degraded (are detectable).
(3) Noise Reduction Low-Pass Filter (LPF) for Vertical Sync		Description amended The noise reduction LPF reduces the superimposed noise on the video signals before composite sync signal separation. The LPFs can be separately set for the horizontal sync and vertical sync. The cutoff frequency of the vertical sync LPF can be set using SYNCSCR1.LPFVSYNC[2:0]. The cutoff frequency should be within a range that assures that the composite sync signal components are not degraded (are detectable).
30.6 Recommended Setting Table 30.42 Recommended Setting for Each Color Format	1877	Table amended

Register	Bit	NTSC-3.58	NTSC-4.43	PAL-4.43
ACC level setting				
ACCCR1	ACCLEVEL	220	220	230
AGC level setting				
AGCCR1	AGCLEVEL	230	230	242

chanhvinh.com

Item	Page	Revision (See Manual for Details)
31.1 Features Table 31.1 Features of Video Display Controller 4	1883	Table amended **Item** / **Function** Graphics: • Number of graphic planes: Three planes (graphics 1, graphics 2, and graphics 3) • Supported pixel formats: — ... — YCbCr422 progressive format (Y: 8 bits, Cb/Cr: 8 bits; 16 bits in total) (only for graphics 1) • Maximum image size to be read: 1024 pixels × 1024 lines (horizontal × vertical)
31.4 Clocks	1887	Note added Note: Points to be aware of when using LCD_EXTCLK The LCD_EXTCLK signal is multiplexed in three locations: pins PE0, PH5, and PG27. However, it is recommended that pins PE0 and PG27 be used when the digital video decoder is employed. Using pin PH5 can result in the generation of noise on the analog input screen.
33.1 Scaler 33.1.1 Overview of Functions Figure 33.1 Functional Block Diagram of Scaler	1952	Figure amended 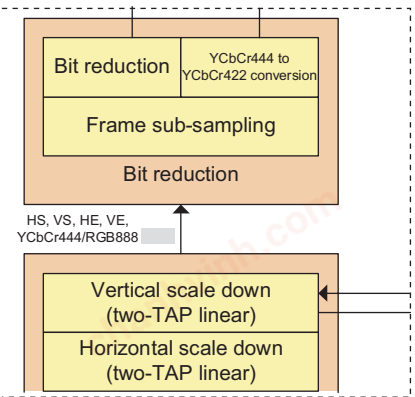
33.1.2 Register Control Table 33.1 Register Update Control	1953, 1954	Table amended **Register Name** / **Bit Name** / **Initial Value** / **Description** GR1_UPDATE / GR1_P_VEN / 0 / Graphics Display Register Update 0: Registers are not updated. 1: Registers are updated at the rising edge of the Vsync. GR1_UPDATE / GR1_IBUS_VEN / 0 / Frame Buffer Read Control Register Update 0: Registers are not updated. 1: Registers are updated at the rising edge of the Vsync.

chanhvinh.com

Item	Page	Revision (See Manual for Details)
33.1.3 Synchronization Control (3) Compensating for Missing Vsync Signals Figure 33.4 Repeated-Vsync Masking and Missing-Vsync Compensation	1958	Figure amended 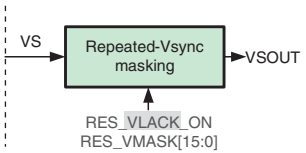
33.1.7 Horizontal Scale-Down (4) Handling for Lack of Last-Input Pixel	1969	Description amended RES_DS_H_RATIO = roundup (RATIO_org – σ)
33.2.14 Initial Vertical Phase Register (SCL0_DS5)	2011	Table note amended Note: This register is updated when the SCL0_VEN_A and SCL0_VEN_B bits in the SCL0 register update control register (SCL0_UPDATE) are 1.
33.2.15 Vertical Scaling Register (SCL0_DS6)	2012	Table note amended Note: These bits updated when the SCL0_VEN_A and SCL0_VEN_B bits in the SCL0 register update control register (SCL0_UPDATE) are 1.
33.2.16 Scaling-Down Control Block Output Size Register (SCL0_DS7)	2013	Table note amended Note: This register is updated when the SCL0_VEN_A and SCL0_VEN_C bits in the SCL0 register update control register (SCL0_UPDATE) are 1.
33.2.20 Scaling-Up Control Block Input Size Register (SCL0_US4)	2017	Table note amended Note: This register is updated when the SCL0_VEN_B and SCL0_VEN_D bits in the SCL0 register update control register (SCL0_UPDATE) are 1.
33.2.24 Frame Buffer Read Select Register (SCL0_US8)	2021	Table note amended Note: RES_IBUS_SYNC_SEL is updated when the values of the SCL0_VEN_B and SCL0_VEN_D bits in the SCL0 register update control register (SCL0_UPDATE) are both 1. RES_DISP_ON is updated when the value of the SCL0_VEN_D bit in the SCL0 register update control register (SCL0_UPDATE) is 1.
33.2.27 Writing Mode Register (SCL1_WR1)	2024	Table note amended Note: ... RES_DS_WR_MD and RES_MD are updated when the SCL1_VEN_A and SCL1_VEN_B bits in the SCL1 register update control register (SCL1_UPDATE) are 1.

chanhvinh.com

<table>
<tr><th>Item</th><th>Page</th><th>Revision (See Manual for Details)</th></tr>
<tr><td>33.2.36 Frame Buffer Control Register 1 (Graphics 1) (GR1_FLM1)</td><td>2036</td><td>Table note amended
Note: ...
GR1_BST_MD is updated when the GR1_IBUS_VEN and GR1_P_VEN bits in the graphics 1 register update control register (GR1_UPDATE) are 1.</td></tr>
<tr><td>33.2.37 Frame Buffer Control Register 2 (Graphics 1) (GR1_FLM2)</td><td>2037</td><td>Table note amended
Note: This register is updated when the GR1_IBUS_VEN and GR1_P_VEN bits in the graphics 1 register update control register (GR1_UPDATE) are 1.</td></tr>
<tr><td>33.2.41 Frame Buffer Control Register 6 (Graphics 1) (GR1_FLM6)</td><td>2042</td><td>Table amended
<table><tr><th>Bit</th><th>Bit Name</th><th>Initial Value</th><th>R/W</th><th>Description</th></tr><tr><td>8</td><td>GR1_CNV444_MD</td><td>0</td><td>R/W</td><td>Sets the interpolation mode for YCbCr422 to YCbCr444 conversion.
0: Hold interpolation
1: Average interpolation</td></tr></table>
Table note amended
Note: ...
GR1_FORMAT and GR1_HW are updated when GR1_IBUS_VEN and GR1_P_VEN bits in the graphics 1 register update control register (GR1_UPDATE) are 1.</td></tr>
<tr><td>33.3.1 Scaling Setting Example for Displaying Input Video Image
(5) Setting Frame Buffer Access Area</td><td>2056</td><td>Description amended
Since the frame buffer is accessed in 64-bit units, YCbCr422 (16 bits) is accessed in 4-pixel units.</td></tr>
<tr><td>Table 33.38 Register Setting Example for 525i Video Input and VGA-Size Video Output</td><td>2057</td><td>Table amended
<table><tr><th>Register Name</th><th>Bit Name</th><th>Settings</th><th>Remarks</th></tr><tr><td colspan="4">Frame Buffer Write Setting</td></tr><tr><td>SCL1_WR1</td><td>RES_DS_WR_MD[2:0]</td><td>0</td><td>Normal write mode for rotation control</td></tr><tr><td>SCL1_WR1</td><td>RES_MD[1:0]</td><td>0</td><td>Frame buffer write format YCbCr422 (16 bits)</td></tr></table></td></tr>
<tr><td></td><td>2058</td><td><table><tr><th>Register Name</th><th>Bit Name</th><th>Settings</th><th>Remarks</th></tr><tr><td colspan="4">Frame Buffer Read Setting</td></tr><tr><td>GR1_FLM1</td><td>GR1_FLM_SEL[1:0]</td><td>0</td><td>Frame number for frame buffer write output</td></tr><tr><td>GR1_FLM2</td><td>GR1_BASE[31:0]</td><td>0</td><td>Conforming to frame buffer write setting</td></tr><tr><td>GR1_FLM3</td><td>GR1_LN_OFF[14:0]</td><td>2048</td><td>Conforming to frame buffer write setting</td></tr><tr><td>GR1_FLM4</td><td>GR1_FLM_OFF[22:0]</td><td>524288</td><td>Conforming to frame buffer write setting</td></tr><tr><td>GR1_FLM6</td><td>GR1_FORMAT[3:0]</td><td>8</td><td>Frame buffer read format YCbCr422</td></tr><tr><td>GR1_FLM_RD</td><td>GR1_R_ENB</td><td>1</td><td>Frame buffer read enabled</td></tr><tr><td>GR1_FLM6</td><td>GR1_CNV444_MD</td><td>1</td><td>Mean value interpolation in YCbCr422 → YCbCr444 conversion</td></tr></table></td></tr>
</table>

chanhvinh.com

Item	Page	Revision (See Manual for Details)
34.1.5 Color Matrix Table 34.9 Color Matrix Control	2080	Table amended Register Name: ADJ_MTX_CBB_ADJ0 Bit Name: ADJ_MTX_BG [10:0] Initial Value: 256
35.1 Image Synthesizer 35.1.1 Overview of Functions	2109	Description added On each of the graphics planes, background color, lower-layer graphics, current graphics, or blended image (graphics 2 and 3 processes) of lower-layer graphics and current graphics can be displayed. The large-capacity on-chip RAM and external SDRAM can be used as the frame buffer. However, display may not be possible if the bus bandwidth is insufficient when using external SDRAM. Therefore, it is recommended that the frame buffer be allocated in the large-capacity on-chip RAM. The functional block diagram of the image synthesizer is shown below.
35.1.2 Graphics Data Read Control (11) Endian Control Figure 35.4 Data Arrangement with Endian Control Disabled	2120	Figure amended 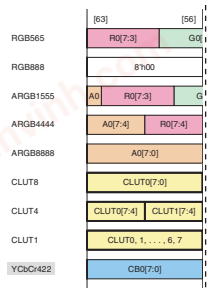
35.2.3 Frame Buffer Control Register 1 (Graphics 2) (GR2_FLM1)	2147	Table note amended Note: ... GR2_BST_MD is updated when GR2_IBUS_VEN is 1, and GR2_IBUS_VEN and GR2_P_VEN in GR2_UPDATE are 1.

chanhvinh.com

Item	Page	Revision (See Manual for Details)
35.2.44 Status Monitor Register (Graphics 3) (GR3_MON)	2190	Table amended

Bit	Bit Name	Initial Value	R/W	Description
31 to 1	—	All 0	R	Reserved These bits are always read as 0. The write value should always be 0.
0	GR3_ARC_ST	0	R	Status Flag for Alpha Blending in Rectangular Area 0: Addition or subtraction has been completed. (α value is 0 or 255) 1: Addition or subtraction is in progress.

36.2.1 Register Update Control Register G in Gamma Correction Block (GAM_G_UPDATE)	2237	Table amended

Bit	Bit Name	Initial Value	R/W	Description
31 to 1	—	All 0	R	Reserved These bits are always read as 0. The write value should always be 0.
0	GAM_G_VEN	0	R/WC1	Gamma Correction (G) Register Update 0: Registers are not updated. 1: Registers are updated at the rising edge of the Vsync.

36.2.2 Function Switch Register in Gamma Correction Block (GAM_SW)	2238	Table amended

Bit	Bit Name	Initial Value	R/W	Description
31 to 1	—	All 0	R	Reserved These bits are always read as 0. The write value should always be 0.
0	GAM_ON	0	R/W	Gamma Correction On/Off Control 0: Off 1: On

36.2.12 Register Update Control Register B in Gamma Correction Block (GAM_B_UPDATE)	2250	Table amended

Bit	Bit Name	Initial Value	R/W	Description
31 to 1	—	All 0	R	Reserved These bits are always read as 0. The write value should always be 0.
0	GAM_B_VEN	0	R/WC1	Gamma Correction (B) Register Update 0: Registers are not updated. 1: Registers are updated at the rising edge of the Vsync.

36.2.22 Register Update Control Register R in Gamma Correction Block (GAM_R_UPDATE)	2262	Table amended

Bit	Bit Name	Initial Value	R/W	Description
31 to 1	—	All 0	R	Reserved These bits are always read as 0. The write value should always be 0.
0	GAM_R_VEN	0	R/WC1	Gamma Correction (R) Register Update 0: Registers are not updated. 1: Registers are updated at the rising edge of the Vsync.

chanhvinh.com

Item	Page	Revision (See Manual for Details)
36.2.32 TCON Register Update Control Register (TCON_UPDATE)	2274	Table amended

Bit	Bit Name	Initial Value	R/W	Description
31 to 1	—	All 0	R	Reserved These bits are always read as 0. The write value should always be 0.
0	TCON_VEN	0	R/WC1	LCD TCON Register Update 0: Registers are not updated. 1: Registers are updated at the rising edge of the Vsync.

Item	Page	Revision (See Manual for Details)
36.2.35 TCON Vertical Timing Setting Register A2 (TCON_TIM_STVA2)	2277	Table amended

Bit	Bit Name	Initial Value	R/W	Description
31 to 5	—	All 0	R	Reserved These bits are always read as 0. The write value should always be 0.
4	TCON_STVA_INV	1	R/W	Polarity Inversion Control of STVA Signal 0: Not inverted 1: Inverted

Item	Page	Revision (See Manual for Details)
36.2.37 TCON Vertical Timing Setting Register B2 (TCON_TIM_STVB2)	2279	Table amended

Bit	Bit Name	Initial Value	R/W	Description
31 to 5	—	All 0	R	Reserved These bits are always read as 0. The write value should always be 0.
4	TCON_STVB_INV	0	R/W	Polarity Inversion Control of STVB Signal 0: Not inverted 1: Inverted

Item	Page	Revision (See Manual for Details)
37.1 System Controller 37.1.2 Interrupt Control Table 37.1 Interrupt Signals	2307	Table amended

Signal Name	Function
VI_VSYNC	Vsync signal before scaling
LO_VSYNC	Vsync signal after scaling
VSYNCERR	Missing Vsync signal for scaling
VLINE	Specified line signal for panel output
VFIELD	Field end signal for recording function
VBUFERR1	Frame buffer write overflow signal
VBUFERR2	Graphics 1 frame buffer read underflow signal
VBUFERR3	Graphics 2 frame buffer read underflow signal
VBUFERR4	Graphics 3 frame buffer read underflow signal

chanhvinh.com

Item	Page	Revision (See Manual for Details)
37.1 System Controller 37.1.2 Interrupt Control Table 37.2 Interrupt Clear/Hold Settings	2308, 2309	Table amended

Register Name	Bit Name	Initial Value	Description
SYSCNT_INT2	INT_STA0	0	VI_VSYNC Interrupt Clear/Hold 0(W): Clears the interrupt status. 1(W): Starts interrupt acceptance. 0(R): No interrupt has occurred. 1(R): An interrupt has occurred.
SYSCNT_INT2	INT_STA1	0	LO_VSYNC Interrupt Clear/Hold 0(W): Clears the interrupt status. 1(W): Starts interrupt acceptance. 0(R): No interrupt has occurred. 1(R): An interrupt has occurred.
SYSCNT_INT2	INT_STA2	0	VSYNCERR Interrupt Clear/Hold 0(W): Clears the interrupt status. 1(W): Starts interrupt acceptance. 0(R): No interrupt has occurred. 1(R): An interrupt has occurred.
SYSCNT_INT2	INT_STA3	0	VLINE Interrupt Clear/Hold 0(W): Clears the interrupt status. 1(W): Starts interrupt acceptance. 0(R): No interrupt has occurred. 1(R): An interrupt has occurred.
SYSCNT_INT2	INT_STA4	0	VFIELD Interrupt Clear/Hold 0(W): Clears the interrupt status. 1(W): Starts interrupt acceptance. 0(R): No interrupt has occurred. 1(R): An interrupt has occurred.
SYSCNT_INT2	INT_STA5	0	VBUFERR1 Interrupt Clear/Hold 0(W): Clears the interrupt status. 1(W): Starts interrupt acceptance. 0(R): No interrupt has occurred. 1(R): An interrupt has occurred.
SYSCNT_INT2	INT_STA6	0	VBUFERR2 Interrupt Clear/Hold 0(W): Clears the interrupt status. 1(W): Starts interrupt acceptance. 0(R): No interrupt has occurred. 1(R): An interrupt has occurred.
SYSCNT_INT2	INT_STA7	0	VBUFERR3 Interrupt Clear/Hold 0(W): Clears the interrupt status. 1(W): Starts interrupt acceptance. 0(R): No interrupt has occurred. 1(R): An interrupt has occurred.
SYSCNT_INT1	INT_STA8	0	VBUFERR4 Interrupt Clear/Hold 0(W): Clears the interrupt status. 1(W): Starts interrupt acceptance. 0(R): No interrupt has occurred. 1(R): An interrupt has occurred.

chanhvinh.com

<table>
<tr><th>Item</th><th>Page</th><th>Revision (See Manual for Details)</th></tr>
<tr><td>37.1 System Controller
37.1.2 Interrupt Control
Table 37.3 Interrupt Output On/Off Settings</td><td>2310</td><td>Table amended
<table>
<tr><th>Register Name</th><th>Bit Name</th><th>Initial Value</th><th>Description</th></tr>
<tr><td>SYSCNT_INT4</td><td>INT_OUT0_ON</td><td>0</td><td>VI_VSYNC Interrupt Output On/Off
0: Off
1: On</td></tr>
<tr><td>SYSCNT_INT4</td><td>INT_OUT1_ON</td><td>0</td><td>LO_VSYNC Interrupt Output On/Off
0: Off
1: On</td></tr>
<tr><td>SYSCNT_INT4</td><td>INT_OUT2_ON</td><td>0</td><td>VSYNCERR Interrupt Output On/Off
0: Off
1: On</td></tr>
<tr><td>SYSCNT_INT4</td><td>INT_OUT3_ON</td><td>0</td><td>VLINE Interrupt Output On/Off
0: Off
1: On</td></tr>
<tr><td>SYSCNT_INT4</td><td>INT_OUT4_ON</td><td>0</td><td>VFIELD Interrupt Output On/Off
0: Off
1: On</td></tr>
<tr><td>SYSCNT_INT4</td><td>INT_OUT5_ON</td><td>0</td><td>VBUFERR1 Interrupt Output On/Off
0: Off
1: On</td></tr>
<tr><td>SYSCNT_INT4</td><td>INT_OUT6_ON</td><td>0</td><td>VBUFERR2 Interrupt Output On/Off
0: Off
1: On</td></tr>
<tr><td>SYSCNT_INT4</td><td>INT_OUT7_ON</td><td>0</td><td>VBUFERR3 Interrupt Output On/Off
0: Off
1: On</td></tr>
<tr><td>SYSCNT_INT3</td><td>INT_OUT8_ON</td><td>0</td><td>VBUFERR4 Interrupt Output On/Off
0: Off
1: On</td></tr>
</table></td></tr>
<tr><td>37.1.3 Panel Clock Control</td><td>2313, 2314</td><td>Description added
The panel clock setting procedure is described below.
...
(b) Set PANEL_ICKEN to 1.</td></tr>
<tr><td>37.2.1 Interrupt Control Register 1 (SYSCNT_INT1)</td><td>2316</td><td>Table amended
<table>
<tr><th>Bit</th><th>Bit Name</th><th>Initial Value</th><th>R/W</th><th>Description</th></tr>
<tr><td>0</td><td>INT_STA8</td><td>0</td><td>R/W</td><td>VBUFERR4 Interrupt Clear/Hold
0(W): Clears the interrupt status.
1(W): Starts interrupt acceptance.
0(R): No interrupt has occurred.
1(R): An interrupt has occurred.</td></tr>
</table></td></tr>
</table>

chanhvinh.com

Item	Page	Revision (See Manual for Details)
37.2.2 Interrupt Control Register 2 (SYSCNT_INT2)	2317 to 2319	Table amended

Bit	Bit Name	Initial Value	R/W	Description
28	INT_STA7	0	R/W	VBUFERR3 Interrupt Clear/Hold 0(W): Clears the interrupt status. 1(W): Starts interrupt acceptance. 0(R): No interrupt has occurred. 1(R): An interrupt has occurred.
24	INT_STA6	0	R/W	VBUFERR2 Interrupt Clear/Hold 0(W): Clears the interrupt status. 1(W): Starts interrupt acceptance. 0(R): No interrupt has occurred. 1(R): An interrupt has occurred.
20	INT_STA5	0	R/W	VBUFERR1 Interrupt Clear/Hold 0(W): Clears the interrupt status. 1(W): Starts interrupt acceptance. 0(R): No interrupt has occurred. 1(R): An interrupt has occurred.
16	INT_STA4	0	R/W	VFIELD Interrupt Clear/Hold 0(W): Clears the interrupt status. 1(W): Starts interrupt acceptance. 0(R): No interrupt has occurred. 1(R): An interrupt has occurred.
12	INT_STA3	0	R/W	VLINE Interrupt Clear/Hold 0(W): Clears the interrupt status. 1(W): Starts interrupt acceptance. 0(R): No interrupt has occurred. 1(R): An interrupt has occurred.
8	INT_STA2	0	R/W	VSYNCERR Interrupt Clear/Hold 0(W): Clears the interrupt status. 1(W): Starts interrupt acceptance. 0(R): No interrupt has occurred. 1(R): An interrupt has occurred.
4	INT_STA1	0	R/W	LO_VSYNC Interrupt Clear/Hold 0(W): Clears the interrupt status. 1(W): Starts interrupt acceptance. 0(R): No interrupt has occurred. 1(R): An interrupt has occurred.
0	INT_STA0	0	R/W	VI_VSYNC Interrupt Clear/Hold 0(W): Clears the interrupt status. 1(W): Starts interrupt acceptance. 0(R): No interrupt has occurred. 1(R): An interrupt has occurred.

37.2.3 Interrupt Control Register 3 (SYSCNT_INT3)	2320	Table amended	

Bit	Bit Name	Initial Value	R/W	Description
0	INT_OUT8_ON	0	R/W	VBUFERR4 Interrupt Output On/Off 0: Off 1: On

chanhvinh.com

Item	Page	Revision (See Manual for Details)
37.2.4 Interrupt Control Register 4 (SYSCNT_INT4)	2321, 2322	Table amended

Bit	Bit Name	Initial Value	R/W	Description
28	INT_OUT7_ON	0	R/W	VBUFERR3 Interrupt Output On/Off 0: Off 1: On
24	INT_OUT6_ON	0	R/W	VBUFERR2 Interrupt Output On/Off 0: Off 1: On
20	INT_OUT5_ON	0	R/W	VBUFERR1 Interrupt Output On/Off 0: Off 1: On
16	INT_OUT4_ON	0	R/W	VFIELD Interrupt Output On/Off 0: Off 1: On
12	INT_OUT3_ON	0	R/W	VLINE Interrupt Output On/Off 0: Off 1: On
8	INT_OUT2_ON	0	R/W	VSYNCERR Interrupt Output On/Off 0: Off 1: On
4	INT_OUT1_ON	0	R/W	LO_VSYNC Interrupt Output On/Off 0: Off 1: On
0	INT_OUT0_ON	0	R/W	VI_VSYNC Interrupt Output On/Off 0: Off 1: On

Section 39 Display Out Comparison Unit	2327	Section title amended
Section 40 OpenVG™-Compliant Renesas Graphics Processor 40.1 Specification 40.2 Usage Note	2353	Section title amended Section added
Section 41 JPEG Codec Unit	2355	Section title amended

chanhvinh.com

Item	Page	Revision (See Manual for Details)
41.1 Features	2355	Description amended • Pixel format: Decompression: YCbCr444 (H = 1:1:1, V = 1:1:1), YCbCr422 (H = 2:1:1, V = 1:1:1), YCbCr411 (H = 4:1:1, V = 1:1:1), YCbCr420 (H = 2:1:1, V = 2:1:1) ... • The buffer size can be reduced by using the mode in which data transfer is temporarily stopped each time the specified number of lines or the specified amount of data is transferred during image data input/output or coded data input. • Image sizes that can be processed: Sizes divisible by the minimum coded unit (MCU): 8 lines by 8 pixels in YCbCr444; 8 lines by 16 pixels in YCbCr422; 8 lines by 32 pixels in YCbCr411; 16 lines by 16 pixels in YCbCr420
41.2 Register Descriptions Table 41.1 Register Configuration	2357	Table amended

Register Name	Abbreviation	R/W	Address	Access Size
JPEG interface compression source line count register	JIFESLC	R/W	H'E801 7050	32
JPEG interface decompression control register	JIFDCNT	R/W	H'E801 7058	32

41.2.1 JPEG Code Mode Register (JCMOD)	2359	Table amended

Bit	Bit Name	Initial Value	R/W: Compression	R/W: De-compression	Description
2 to 0	REDU[2:0]	000	R/W	R	Pixel Format [Compression] 001: YCbCr422 Other than above: Setting prohibited. [Decompression] 000: YCbCr444 001: YCbCr422 110: YCbCr411 010: YCbCr420 Other than above: Error (JCU cannot process normally.)

chanhvinh.com

Item	Page	Revision (See Manual for Details)
41.2.18 JPEG Interface Compression Control Register (JIFECNT	2378	Bit table and table amended

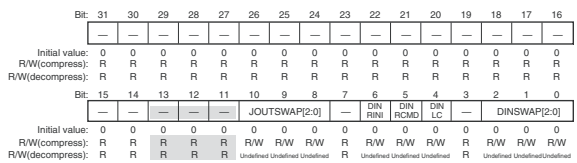

Bit	Bit Name	Initial Value	R/W Compression	R/W De-compression	Description
31 to 11	—	All 0	R		Reserved These bits are always read as 0. The write value should always be 0.
41.2.23 JPEG Interface Decompression Control Register (JIFDCNT	2385	Section deleted			
41.2.28 JPEG Interface Decompression Destination Line Count Register (JIFDDLC)	2394	Description amended JIFDDLC sets the number of output image data lines when the count mode for stopping the output of image data lines is on (the DOUTLC bit in JIFECNT is set to 1). This register should be set such that that the output image data line count matches the MCU unit.			

Table amended

Bit	Bit Name	Initial Value	R/W Compression	R/W De-compression	Description
15 to 3	LINES[15:3]	H'FFF8	Invalid	R/W	Set these bits to specify the number of lines of output image data to be written. Use a setting value such that that the output image data line count matches the MCU unit. For YCbCr444, YCbCr422, and YCbCr411 output, the setting value × 1 is equal to the output image data line count. For YCbCr420 output, the setting value × 2 is equal to the output image data line count.
2 to 0	LINES[2:0]			R	The lower three bits should be set to 0.

chanhvinh.com

Item	Page	Revision (See Manual for Details)
41.2.30 JPEG Interrupt Enable Register 1 (JINTE1)	2396	Bit table and table amended

Bit:	31	30	29	28	27	26	25	24	23	22	21	20	19	18	17	16
	—	—	—	—	—	—	—	—	—	—	—	—	—	—	—	—
Initial value:	0	0	0	0	0	0	0	0	0	0	0	0	0	0	0	0
R/W(compress):	R	R	R	R	R	R	R	R	R	R	R	R	R	R	R	R
R/W(decompress):	R	R	R	R	R	R	R	R	R	R	R	R	R	R	R	R

Bit:	15	14	13	12	11	10	9	8	7	6	5	4	3	2	1	0
	—	—	—	—	—	—	—	—	—	CBTEN	DIN LEN	—	—	DBTEN	JINEN	DOU TLE
Initial value:	0	0	0	0	0	0	0	0	0	0	0	0	0	0	0	0
R/W(compress):	R	R	R	R	R	R	R	R	R	R/W	R/W	R	R	Undefined	Undefined	Undefined
R/W(decompress):	R	R	R	R	R	R	R	R	R	Undefined	Undefined	R	R	R/W	R/W	R/W

Bit	Bit Name	Initial Value	R/W: Compression	R/W: De-compression	Description
5	DINLEN	0	R/W	Invalid	Enables or disables a data transfer processing interrupt request (JDTI) when the DINLF bit in JINTS1 is set to 1. 0: Disables an interrupt request. 1: Enables an interrupt request.
4, 3	—	All 0		R	Reserved These bits are always read as 0. The write value should always be 0.

41.2.31 JPEG Interrupt Status Register 1 (JINTS1)	2398	Bit table and table amended

Bit:	31	30	29	28	27	26	25	24	23	22	21	20	19	18	17	16
	—	—	—	—	—	—	—	—	—	—	—	—	—	—	—	—
Initial value:	0	0	0	0	0	0	0	0	0	0	0	0	0	0	0	0
R/W(compress):	R	R	R	R	R	R	R	R	R	R	R	R	R	R	R	R
R/W(decompress):	R	R	R	R	R	R	R	R	R	R	R	R	R	R	R	R

Bit:	15	14	13	12	11	10	9	8	7	6	5	4	3	2	1	0
	—	—	—	—	—	—	—	—	—	CBTF	DINLF	—	—	DBTF	JINF	DOU TLF
Initial value:	0	0	0	0	0	0	0	0	0	0	0	0	0	0	0	0
R/W(compress):	R	R	R	R	R	R	R	R	R	R/W*	R/W*	R	R	Undefined	Undefined	Undefined
R/W(decompress):	R	R	R	R	R	R	R	R	R	Undefined	Undefined	R	R	R/W*	R/W*	R/W*

Bit	Bit Name	Initial Value	R/W: Compression	R/W: De-compression	Description
5	DINLF	0	R/W*	Invalid	This bit is set to 1 when the number of input image data lines indicated by JIFESLC is read in compression. This bit is valid only when the DINLC bit in JIFECNT is set to 1.
4, 3	—	All 0		R	These bits are always read as 0. The write value should always be 0.

41.3 Operation 41.3.1 Compression (1) Overview of Processing	2400	Description deleted 4. Coded data is transferred from the JCU to the external buffer. 5. Compression is completed after one frame of data is processed completely.
(2) Flowchart (Compression) (a) Initial Settings Figure 41.2 Compression Initial Setting Flow	2401	Figure amended

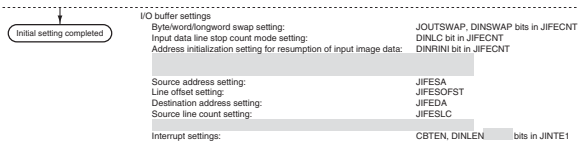

chanhvinh.com

Item	Page	Revision (See Manual for Details)
41.3 Operation 41.3.1 Compression (2) Flowchart (Compression) (b) Compression Process	2402	Description deleted .... When the DINRINI bit is one, the address set in JIFESA is used on resumption. •
(c) Data Correction		Section added
(5) Input Pixel Format	2408	Description amended • When the DINSWAP bits = 000 • When the DINSWAP bits = 001 • When the DINSWAP bits = 010 • When the DINSWAP bits = 100 • When the DINSWAP bits = 101 • When the DINSWAP bits = 110 • When the DINSWAP bits = 111
41.3.2 Decompression (1) Overview of Processing (c) Error Handling	2415	Description amended ... To clear the interrupt request, set the interrupt request clear command (by setting the JEND bit in JCCMD to 1). When performing decompression/ compression processing after error handling finishes, start the processing from the initial settings.
41.3.3 Output Pixel Format in Decompression	2419	Description amended This module is capable of decompressing JPEG encoded data created in the YCbCr444, YCbCr422, YCbCr411, and YCbCr420 formats. The pixel format of the output image will be YCbCr422, ARGB8888, or RGB565. The flow of conversion of decompressed data to the given output pixel format is shown below.
(2) YCbCr Conversion		When data are to be output in the ARGB8888 or RGB565 format, data in the YCbCr422, YCbCr411, or YCbCr420 format are first converted to the YCbCr444 format. When data are to be output in the YCbCr422 format, data in the YCbCr444, YCbCr411, or YCbCr420 format are converted to the YCbCr422 format.

chanhvinh.com

<table>
<tr><th>Item</th><th>Page</th><th>Revision (See Manual for Details)</th></tr>
<tr><td>41.3.3 Output Pixel Format in Decompression

(6) Vertical/Horizontal Subsampling

Horizontal:

Table 41.5 Number of Horizontal Blocks</td><td>2421</td><td>Table amended

<table>
<tr><th>Compression Format</th><th>Output Format</th><th>n</th></tr>
<tr><td>YCbCr444</td><td>YCbCr422</td><td>1/2</td></tr>
<tr><td>YCbCr444</td><td>ARGB8888, RGB565</td><td>1</td></tr>
<tr><td>YCbCr422</td><td>YCbCr422</td><td>1</td></tr>
<tr><td>YCbCr422</td><td>ARGB8888, RGB565</td><td>2</td></tr>
<tr><td>YCbCr411</td><td>YCbCr422</td><td>2</td></tr>
<tr><td>YCbCr411</td><td>ARGB8888, RGB565</td><td>4</td></tr>
<tr><td>YCbCr420</td><td>YCbCr422</td><td>1</td></tr>
<tr><td>YCbCr420</td><td>ARGB8888, RGB565</td><td>2</td></tr>
</table>
</td></tr>
<tr><td>Vertical:

Table 41.6 Number of Vertical Blocks</td><td></td><td>Table amended

<table>
<tr><th>Compression Format</th><th>Output Format</th><th>m</th></tr>
<tr><td>YCbCr444</td><td>YCbCr422</td><td>1</td></tr>
<tr><td>YCbCr444</td><td>ARGB8888, RGB565</td><td>1</td></tr>
<tr><td>YCbCr422</td><td>YCbCr422</td><td>1</td></tr>
<tr><td>YCbCr422</td><td>ARGB8888, RGB565</td><td>1</td></tr>
<tr><td>YCbCr411</td><td>YCbCr422</td><td>1</td></tr>
<tr><td>YCbCr411</td><td>ARGB8888, RGB565</td><td>1</td></tr>
<tr><td>YCbCr420</td><td>YCbCr422</td><td>2</td></tr>
<tr><td>YCbCr420</td><td>ARGB8888, RGB565</td><td>2</td></tr>
</table>
</td></tr>
<tr><td>41.4.2 Data Transfer Interrupt Request (JDTI)

(1) Compression</td><td>2426</td><td>Description deleted

• Interrupt request generated after the specified number of input image data lines has been read When the DINLF bit in JINTS1 is 1, the number of image data lines specified by JIFESLC has been transferred; transfer the rest of the image data to the external buffer and resume transferring the data from the external buffer. A data transfer interrupt request is sent when the DINLEN bit in JINTE1 is 1.
•
• Interrupt request generated after all ....</td></tr>
<tr><td>41.6 Usage Notes

41.6.1 Pixel Format YCbCr</td><td>2429</td><td>Description amended

This module treats the range from -128 to 127 as input/output values for YCbCr values in the YCbCr444, YCbCr422, YCbCr411, or YCbCr420 pixel format. ...</td></tr>
</table>

chanhvinh.com

Item	Page	Revision (See Manual for Details)
43.3.1 Sound Generator Control Register 1 (SGCR1)	2463, 2464	Table amended

Bit	Bit Name	Initial Value	R/W	Description
4, 3	SGCK[1:0]	H'0	R/W	Clock Select Selects the operating clock (SGCLK). 00: P0φ/2 01: P0φ/4 10: P0φ/8 11: P0φ/16
2 to 0	DPF[2:0]	H'0	R/W	Attenuator Function Select These bits turn the attenuator function on and off, and select the attenuation cycle. 000: Attenuator function is off. 001: Attenuates at the TONE frequency 010: Attenuates at the TONE frequency/2 011: Attenuates at the TONE frequency/4 100: Attenuates at the TONE frequency/8 101: Attenuates at the TONE frequency/16 110: Attenuates at the TONE frequency/32 111: Setting prohibited

45.3 Register Descriptions Table 45.2 Register Configuration	2481	Table amended

Register Name	Abbreviation	R/W	Address	Access Size
Status register 1	CE_HOST_STS1	R	H'E8030848	16, 32
Status register 2	CE_HOST_STS2	R	H'E803084C	16, 32
DMA mode setting register	CE_DMA_MODE	R/W	H'E803085C	16, 32
Card detection/port control register	CE_DETECT	R/W	H'E8030870	16, 32
Special mode setting register	CE_ADD_MODE	R/W	H'E8030874	16, 32
Version register	CE_VERSION	R/W	H'E803087C	16, 32

48.2 Register Descriptions Table 48.11 Register Configuration	2573	Table amended

Port	Register Name	Abbreviation	R/W	Intial Value	Address	Access Size
J	Port J control register 7	PJCR7	R/W	H'0000	H'FFFE3900	8, 16, 32
	Port J port register 1	PJPR1	R	H'xxxx	H'FFFE3918	8, 16, 32
	Port J port register 0	PJPR0	R	H'xxxx	H'FFFE391A	8, 16

48.2.8 Port C Control Registers 0 to 2 (PCCR0 to PCCR2) (3) Port C Control Register 0 (PCCR0)	2595	Table amended

Bit	Bit Name	Initial Value	R/W	Description
9, 8	PC2MD[1:0]	00	R/W	PC2 Mode Select the function of the PC2. 00: PC2 10: SCK6 01: RD/$\overline{WR}$ 11: Setting prohibited

48.2.31 Port J I/O registers 0, 1 (PJIOR0, PJIOR1: Available Only in the SH7269 Group) (1) Port J IO Register 1 (PJIOR1)	2661	Bit table amended

Bit:	15	14	13	12	11	10	9	8	7	6	5	4	3	2	1	0
	PJ31 IOR	PJ30 IOR	PJ29 IOR	PJ28 IOR	PJ27 IOR	PJ26 IOR	PJ25 IOR	PJ24 IOR	PJ23 IOR	PJ22 IOR	PJ21 IOR	PJ20 IOR	PJ19 IOR	PJ18 IOR	PJ17 IOR	PJ16 IOR
Initial value:	0	0	0	0	0	0	0	0	0	0	0	0	0	0	0	0
R/W:	R/W	R/W	R/W	R/W	R/W	R/W	R/W	R/W	R/W	R/W	R/W	R/W	R/W	R/W	R/W	R/W

(2) Port J IO Register 0 (PJIOR0)		Bit table amended

Bit:	15	14	13	12	11	10	9	8	7	6	5	4	3	2	1	0
	PJ15 IOR	PJ14 IOR	PJ13 IOR	PJ12 IOR	PJ11 IOR	PJ10 IOR	PJ9 IOR	PJ8 IOR	PJ7 IOR	PJ6 IOR	PJ5 IOR	PJ4 IOR	PJ3 IOR	PJ2 IOR	PJ1 IOR	PJ0 IOR
Initial value:	0	0	0	0	0	0	0	0	0	0	0	0	0	0	0	0
R/W:	R/W	R/W	R/W	R/W	R/W	R/W	R/W	R/W	R/W	R/W	R/W	R/W	R/W	R/W	R/W	R/W

chanhvinh.com

Item	Page	Revision (See Manual for Details)
48.2.32 Port J Data Registers 0, 1 (PJDR0, PJDR1: Available Only in the SH7269 Group) (1) Port J Data Register 1 (PJDR1)	2663	Bit table amended 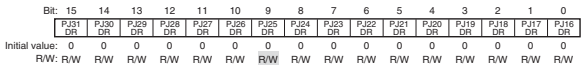
(2) Port J Data Register 0 (PJDR0)	2664	Bit table amended 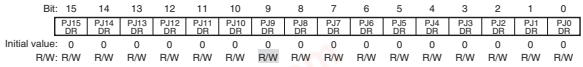
49.2 Register Descriptions Table 49.2 Register Configuration	2674	Table amended
49.2.2 Standby Control Register 2 (STBCR2)	2676	Table amended
49.2.8 Standby Control Register 8 (STBCR8)	2688	Table amended

Register Name	Abbreviation	R/W	Initial Value	Address	Access Size
Standby control register 1	STBCR1	R/W	H'00	H'FFFE0014	8
Standby control register 2	STBCR2	R/W	H'00	H'FFFE0018	8
Standby control register 3	STBCR3	R/W	H'7E	H'FFFE0408	8
Standby control register 4	STBCR4	R/W	H'FF	H'FFFE040C	8
Standby control register 5	STBCR5	R/W	H'FF	H'FFFE0410	8
Standby control register 6	STBCR6	R/W	H'FF	H'FFFE0414	8
Standby control register 7	STBCR7	R/W	H'FF	H'FFFE0418	8
Standby control register 8	STBCR8	R/W	H'FF	H'FFFE041C	8
Standby control register 9	STBCR9	R/W	H'FF	H'FFFE0440	8
Standby control register 10	STBCR10	R/W	H'7F	H'FFFE0444	8

Bit	Bit Name	Initial Value	R/W	Description
5	MSTP8	0	R/W	Module Stop 8 When the MSTP8 bit is set to 1, the clock supply to the direct memory access controller is halted. 0: The direct memory access controller runs. 1: Clock supply to the direct memory access controller halted. Note: Do not set this bit to 1 when using multifunction timer pulse unit 2, the compare-match timer, the serial communication interface with FIFO, the controller area network, the IEBus™ controller, the sound generator, or the motor control PWM timer.

Bit	Bit Name	Initial Value	R/W	Description
4	MSTP84	1	R/W	Module Stop 84 When the MSTP84 bit is set to 1, the clock supply to the OpenVG™-compliant Renesas graphics processor is halted. 0: The OpenVG™-compliant Renesas graphics processor runs. 1: Clock supply to the OpenVG™-compliant Renesas graphics processor is halted.

chanhvinh.com

Item	Page	Revision (See Manual for Details)
49.2.10 Standby Control Register 10 (STBCR10)	2692	Bit table amended 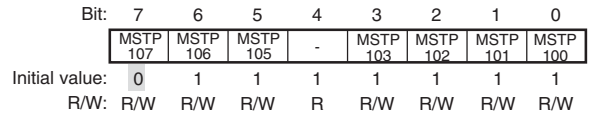 Table amended 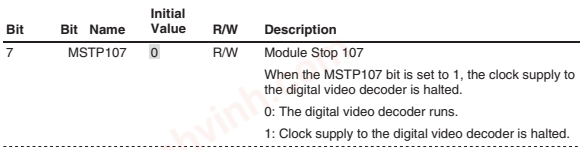
49.2.12 Software Reset Control Register 2 (SWRSTCR2)	2696	Bit table amended 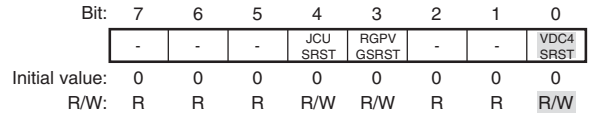 Table amended 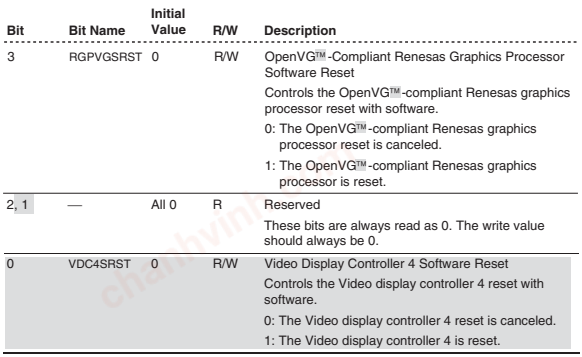
49.3.2 Software Standby Mode (1) Transition to Software Standby Mode	2717	Description amended 3. After setting the STBY and DEEP bits in STBCR1 to 1 and 0 respectively, read STBCR1. Then, execute a SLEEP instruction.
50.6.2 Notes	2745	Description amended 1. The clock related signals (EXTAL, XTAL, CKIO, AUDIO_X1, AUDIO_X2, USB_X1, USB_X2, RTC_X1, RTC_X2, and MD_CLK0) are inapplicable to the boundary scan. 4. The USB related signals (DP, DM, VBUS, and REFRIN) are inapplicable to the boundary scan.

chanhvinh.com

Item	Page	Revision (See Manual for Details)
51.1 Register Addresses (by functional module, in order of the corresponding section numbers)	2761, 2762	Table amended

Module Name	Register Name	Abbreviation	Number of Bits	Address	Access Size
Renesas serial peripheral interface	Control register_0	SPCR_0	8	H'E800E000	8, 16
	Slave select polarity register_0	SSLP_0	8	H'E800E001	8, 16
	Pin control register_0	SPPCR_0	8	H'E800E002	8, 16
	Status register_0	SPSR_0	8	H'E800E003	8, 16
	Data register_0	SPDR_0	32	H'E800E004	8, 16, 32
	Sequence control register_0	SPSCR_0	8	H'E800E008	8, 16
	Sequence status register_0	SPSSR_0	8	H'E800E009	8, 16
	Bit rate register_0	SPBR_0	8	H'E800E00A	8, 16
	Data control register_0	SPDCR_0	8	H'E800E00B	8, 16
	Clock delay register_0	SPCKD_0	8	H'E800E00C	8, 16
	Slave select negation delay register_0	SSLND_0	8	H'E800E00D	8, 16
	Next-access delay register_0	SPND_0	8	H'E800E00E	8
	Command register_00	SPCMD_00	16	H'E800E010	16
	Command register_01	SPCMD_01	16	H'E800E012	16
	Command register_02	SPCMD_02	16	H'E800E014	16
	Command register_03	SPCMD_03	16	H'E800E016	16
	Buffer control register_0	SPBFCR_0	8	H'E800E020	8, 16
	Buffer data count setting register_0	SPBFDR_0	16	H'E800E022	16
	Control register_1	SPCR_1	8	H'E800E800	8, 16
	Slave select polarity register_1	SSLP_1	8	H'E800E801	8, 16
	Pin control register_1	SPPCR_1	8	H'E800E802	8, 16
	Status register_1	SPSR_1	8	H'E800E803	8, 16
	Data register_1	SPDR_1	32	H'E800E804	8, 16, 32
	Sequence control register_1	SPSCR_1	8	H'E800E808	8, 16
	Sequence status register_1	SPSSR_1	8	H'E800E809	8, 16
	Bit rate register_1	SPBR_1	8	H'E800E80A	8, 16
	Data control register_1	SPDCR_1	8	H'E800E80B	8, 16
	Clock delay register_1	SPCKD_1	8	H'E800E80C	8, 16
	Slave select negation delay register_1	SSLND_1	8	H'E800E80D	8, 16
	Next-access delay register_1	SPND_1	8	H'E800E80E	8
	Command register_10	SPCMD_10	16	H'E800E810	16
	Command register_11	SPCMD_11	16	H'E800E812	16
	Command register_12	SPCMD_12	16	H'E800E814	16
	Command register_13	SPCMD_13	16	H'E800E816	16
	Buffer control register_1	SPBFCR_1	8	H'E800E820	8, 16
	Buffer data count setting register_1	SPBFDR_1	16	H'E800E822	16

2763, 2764

Module Name	Register Name	Abbreviation	Number of Bits	Address	Access Size
Renesas quad serial peripheral interface	Command register 0_0	SPCMD0_0	16	H'E8033810	16, 32
	Command register 1_0	SPCMD1_0	16	H'E8033812	16, 32
	Command register 2_0	SPCMD2_0	16	H'E8033814	16, 32
	Command register 3_0	SPCMD3_0	16	H'E8033816	16, 32
	Buffer control register_0	SPBFCR_0	8	H'E8033818	8, 16, 32
	Buffer data count setting register_0	SPBDCR_0	16	H'E803381A	16, 32
	Bit rate register_1	SPBR_1	8	H'E803400A	8, 16, 32
	Data control register_1	SPDCR_1	8	H'E803400B	8, 16, 32
	Clock delay register_1	SPCKD_1	8	H'E803400C	8, 16, 32
	Slave select negation delay register_1	SSLND_1	8	H'E803400D	8, 16, 32
	Next-access delay register_1	SPND_1	8	H'E803400E	8, 16, 32
	Command register 0_1	SPCMD0_1	16	H'E8034010	16, 32
	Command register 1_1	SPCMD1_1	16	H'E8034012	16, 32
	Command register 2_1	SPCMD2_1	16	H'E8034014	16, 32
	Command register 3_1	SPCMD3_1	16	H'E8034016	16, 32
	Buffer control register_1	SPBFCR_1	8	H'E8034018	8, 16, 32
	Buffer data count setting register_1	SPBDCR_1	16	H'E803401A	16, 32

chanhvinh.com

Item	Page	Revision (See Manual for Details)
51.1 Register Addresses (by functional module, in order of the corresponding section numbers)	2796	

Module Name	Register Name	Abbreviation	Number of Bits	Address	Access Size
Image renderer	Control register	CR	32	H'FFFF3008	32
	Status register	SR	32	H'FFFF300C	32
	Status clear register	SRCR	32	H'FFFF3010	32
	Interrupt control register	ICR	32	H'FFFF3014	32
	Interrupt mask register	IMR	32	H'FFFF3018	32
	DL status register	DLPR	32	H'FFFF3020	32
	DL start address register	DLSAR	32	H'FFFF3030	32
	Destination start address register	DSAR	32	H'FFFF3034	32
	Destination stride register	DSTR	32	H'FFFF303C	32
	Destination start address register 2	DSAR2	32	H'FFFF3048	32
	DL start address register 2	DLSAR2	32	H'FFFF304C	32

2798

Module Name	Register Name	Abbreviation	Number of Bits	Address	Access Size
JPEG codec unit	JPEG interface compression source line count register	JIFESLC	32	H'E8017050	32
	JPEG interface decompression control register	JIFDCNT	32	H'E8017058	32

chanhvinh.com

Item	Page	Revision (See Manual for Details)
51.2 Register Bits	2836 to 2838	Table amended

Module Name	Register Abbreviation
Renesas serial peripheral interface	SPCR_0
	SSLP_0
	SPPCR_0
	SPSR_0
	SPDR_0
	SPSCR_0
	SPSSR_0
	SPBR_0
	SPDCR_0
	SPCKD_0
	SSLND_0
	SPND_0
	SPCMD_00
	SPCMD_01
	SPCMD_02
	SPCMD_03
	SPBFCR_0
	SPBFDR_0
	SPCR_1
	SSLP_1
	SPPCR_1
	SPSR_1
	SPDR_1
	SPSCR_1
	SPSSR_1
	SPBR_1
	SPDCR_1
	SPCKD_1
	SSLND_1
	SPND_1
	SPCMD_10
	SPCMD_11
	SPCMD_12
	SPCMD_13
	SPBFCR_1
	SPBFDR_1

chanhvinh.com

Item	Page	Revision (See Manual for Details)
51.2 Register Bits	2933	Table amended

Module Name	Register Abbreviation	Bit 31/23/15/7	Bit 30/22/14/6	Bit 29/21/13/5	Bit 28/20/12/4	Bit 27/19/11/3	Bit 26/18/10/2	Bit 25/17/9/1	Bit 24/16/8/0
Image renderer	DSAR2	DSAR2[31]	DSAR2[30]	DSAR2[29]	DSAR2[28]	DSAR2[27]	DSAR2[26]	DSAR2[25]	DSAR2[24]
		DSAR2[23]	DSAR2[22]	DSAR2[21]	DSAR2[20]	DSAR2[19]	DSAR2[18]	DSAR2[17]	DSAR2[16]
		DSAR2[15]	DSAR2[14]	DSAR2[13]	DSAR2[12]	DSAR2[11]	DSAR2[10]	DSAR2[9]	DSAR2[8]
		DSAR2[7]	DSAR2[6]	DSAR2[5]	DSAR2[4]	DSAR2[3]	DSAR2[2]	DSAR2[1]	DSAR2[0]
	DLSAR2	DLSA[31]	DLSA[30]	DLSA[29]	DLSA[28]	DLSA[27]	DLSA[26]	DLSA[25]	DLSA[24]
		DLSA[23]	DLSA[22]	DLSA[21]	DLSA[20]	DLSA[19]	DLSA[18]	DLSA[17]	DLSA[16]
		DLSA[15]	DLSA[14]	DLSA[13]	DLSA[12]	DLSA[11]	DLSA[10]	DLSA[9]	DLSA[8]
		DLSA[7]	DLSA[6]	DLSA[5]	DLSA[4]	DLSA[3]	DLSA[2]	DLSA[1]	DLSA[0]
	TRIMR	—	—	—	—	—	—	—	—

2938

Module Name	Register Abbreviation	Bit 31/23/15/7	Bit 30/22/14/6	Bit 29/21/13/5	Bit 28/20/12/4	Bit 27/19/11/3	Bit 26/18/10/2	Bit 25/17/9/1	Bit 24/16/8/0
JPEG codec unit	JIFECNT	—	—	—	—	—	—	—	—
		—	—	—	—	—	—	—	—
		—	—	—	—	—	JOUTSWAP[2]	JOUTSWAP[1]	JOUTSWAP[0]
		—	DINRINI	DINRCMD	DINLC	—	DINSWAP[2]	DINSWAP[1]	DINSWAP[0]
	JIFESLC	—	—	—	—	—	—	—	—
		—	—	—	—	—	—	—	—
		LINES[15]	LINES[14]	LINES[13]	LINES[12]	LINES[11]	LINES[10]	LINES[9]	LINES[8]
		LINES[7]	LINES[6]	LINES[5]	LINES[4]	LINES[3]	LINES[2]	LINES[1]	LINES[0]

2940

Module Name	Register Abbreviation	Bit 31/23/15/7	Bit 30/22/14/6	Bit 29/21/13/5	Bit 28/20/12/4	Bit 27/19/11/3	Bit 26/18/10/2	Bit 25/17/9/1	Bit 24/16/8/0
JPEG codec unit	JINTE1	—	—	—	—	—	—	—	—
		—	—	—	—	—	—	—	—
		—	—	—	—	—	—	—	—
		—	CBTEN	DINLEN	—	—	DBTEN	JINEN	DOUTLEN
	JINTS1	—	—	—	—	—	—	—	—
		—	—	—	—	—	—	—	—
		—	—	—	—	—	—	—	—
		—	CBTF	DINLF	—	—	DBTF	JINF	DOUTLFX

2951

Module Name	Register Abbreviation	Bit 31/23/15/7	Bit 30/22/14/6	Bit 29/21/13/5	Bit 28/20/12/4	Bit 27/19/11/3	Bit 26/18/10/2	Bit 25/17/9/1	Bit 24/16/8/0
Power-down modes	SWRSTCR1	AXTALE	SSIF5SRST	SSIF4SRST	IEBSRST	SSIF3SRST	SSIF2SRST	SSIF1SRST	SSIF0SRST
	SWRSTCR2	—	—	—	JCUSRST	RGPVGSRST	—	—	VDC4SRST

51.3 Register States in Each Operating Mode	2952	Table amended

Module Name	Register Abbreviation	Power-On Reset	Manual Reset	Deep Standby	Software Standby	Module Standby	Sleep
Watchdog timer	WRCSR	Initialized*1	Retained	Initialized	Retained	—	Retained
	Other than above	Initialized	Initialized	Initialized	Retained	—	Retained

52.4 AC Characteristics	2970	Table amended

Table 52.4 Operating Frequency

Item	Symbol		Min.	Max.	Unit	Remarks
Operating frequency	CPU clock (Iϕ)	f	50.00	266.67	MHz	
	Internal bus clock (Bϕ)		50.00	133.33	MHz	
	Peripheral clock 1 (P1ϕ)		50.00	66.67	MHz	
	Peripheral clock 0 (P0ϕ)		25.00	33.33	MHz	

chanhvinh.com

Item	Page	Revision (See Manual for Details)
52.4.1 Clock Timing Table 52.5 Clock Timing	2972	Table amended

Item	Symbol	Min.	Max.	Unit	Figure
Oscillation settling time 1 on return from standby	t_{OSC2}	10	—	ms	Figure 52.4
Real time clock oscillation settling time	t_{ROSC}	3	—	s	Figure 52.6
Mode hold time	t_{MDH}	200	—	ns	Figures 52.3 and 52.4

Figure 52.5 Oscillation Settling Time on Return from Standby (Return by NMI or IRQ)	2974	Figure amended

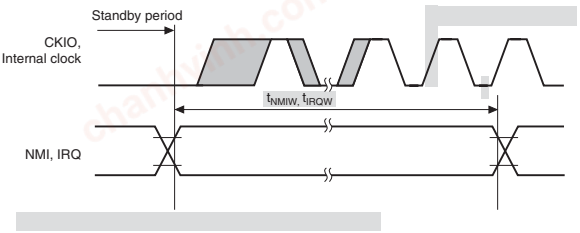

52.4.2 Control Signal Timing Table 52.6 Control Signal Timing	2975	Table amended

Item	Symbol		Min.	Max.	Unit	Figure
$\overline{RES}$ pulse width	Exit from standby mode	t_{RESW}	10	—	ms	Figure 52.7 (1)
	Other than above		20	—	t_{cyc}	
$\overline{TRST}$ pulse width		t_{TRSW}	20	—	t_{cyc}	
NMI pulse width		t_{NMIW}	20	—	t_{cyc}	Figures 52.7 (2) and 52.5
IRQ pulse width		t_{IRQW}	20	—	t_{cyc}	
PINT pulse width		t_{PINTW}	20	—	t_{cyc}	Figure 52.7 (2)

52.4.9 Renesas Serial Peripheral Interface Timing Table 52.13 Renesas Serial Peripheral Interface Timing	3013	Table amended

Item		Symbol	Min.	Max.	Unit	Figure
SSL setup time	Master	t_{LEAD}	1 × t_{SPcyc} − 20	8 × t_{SPcyc}	ns	
	Slave		4	—	t_{cyc}	
SSL hold time	Master	t_{LAG}	1 × t_{SPcyc}	8 × t_{SPcyc} + 20	ns	
	Slave		4		t_{cyc}	

52.4.10 Renesas Quad Serial Peripheral Interface Timing Table 52.14 Renesas Quad Serial Peripheral Interface Timing	3017	Table amended

Item	Symbol	Min.	Max.	Unit	Figure
QSPCLK clock cycle	t_{QScyc}	1	4080	t_{cyc}	Figure 52.50
Data input setup time	t_{SU}	5.0	—	ns	Figures 52.51 and 52.52
Data input hold time	t_H	0.0		ns	
SSL setup time	t_{LEAD}	1.5 × t_{QScyc} − 4	8.5 × t_{QScyc}	ns	
SSL hold time	t_{LAG}	1 × t_{QScyc}	8 × t_{QScyc} + 4	ns	

chanhvinh.com

Item	Page	Revision (See Manual for Details)
52.4.11 SPI Multi I/O Bus Controller Timing Table 52.15 SPI Multi I/O Bus Controller Timing	3019	Table amended

Item	Symbol	Min.	Max.	Unit	Figure
SPBCLK clock cycle	t_{SPBcyc}	2	2	t_{cyc}	Figure 52.53
Data input setup time	t_{SU}	5.0	—	ns	Figures 52.54 and 52.55
Data input hold time	t_H	0.0	—	ns	
SSL setup time	t_{LEAD}	$1 \times t_{SPBcyc} - 3$	$8 \times t_{SPBcyc}$	ns	
SSL hold time	t_{LAG}	$1.5 \times t_{SPBcyc}$	$1.5 \times t_{SPBcyc} + 3$	ns	

Figure 52.55 Transmission and Reception Timing (CPHAT = 1, CPHAR = 1)	3020	Figure amended

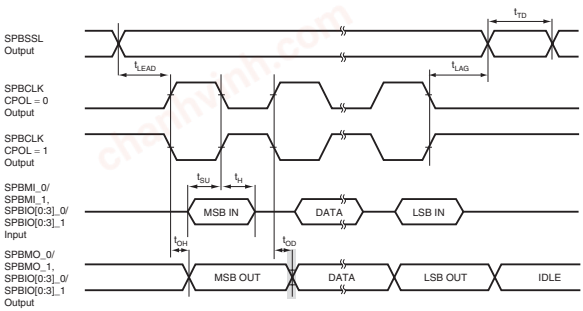

52.4.12 I2C Bus Interface 3 Timing Table 52.16 (1) I2C Bus Interface 3 Timing I2C Bus Format	3022	Table title and table amended

Item	Symbol	Min.	Max.	Unit	Figure
SCL input cycle time	t_{SCL}	$12\ t_{pbcyc}{}^{*1} + 600$	—	ns	Figure 52.58(1)
SCL input high pulse width	t_{SCLH}	$3\ t_{pbcyc}{}^{*1} + 300$	—	ns	

Figure 52.58(1) Input/Output Timing		Figure title amended
Table 52.16 (2) I2C Bus Interface 3 Timing Clock Synchronized Serial Format	3023	Table added
Figure 52.58(2) Clock Input/Output Timing Figure 52.58(3) Transmission/Reception Timing		Figures added

chanhvinh.com

Contents

Section 1 Overview 1
1.1 SH7268/7269 Features 1
1.2 Product Lineup 16
1.3 Block Diagram 17
1.4 Pin Assignment 18
1.5 Pin Functions 21
1.6 List of Pins 34

Section 2 CPU 57
2.1 Register Configuration 57
2.1.1 General Registers 57
2.1.2 Control Registers 58
2.1.3 System Registers 60
2.1.4 Register Banks 61
2.1.5 Initial Values of Registers 61
2.2 Data Formats 62
2.2.1 Data Format in Registers 62
2.2.2 Data Formats in Memory 62
2.2.3 Immediate Data Format 63
2.3 Instruction Features 64
2.3.1 RISC-Type Instruction Set 64
2.3.2 Addressing Modes 68
2.3.3 Instruction Format 73
2.4 Instruction Set 77
2.4.1 Instruction Set by Classification 77
2.4.2 Data Transfer Instructions 83
2.4.3 Arithmetic Operation Instructions 87
2.4.4 Logic Operation Instructions 90
2.4.5 Shift Instructions 91
2.4.6 Branch Instructions 92
2.4.7 System Control Instructions 93
2.4.8 Floating-Point Operation Instructions 95
2.4.9 FPU-Related CPU Instructions 97
2.4.10 Bit Manipulation Instructions 98
2.5 Processing States 99

chanhvinh.com

Section 3 Floating-Point Unit (FPU) 101
3.1 Features 101
3.2 Data Formats 102
3.2.1 Floating-Point Format 102
3.2.2 Non-Numbers (NaN) 105
3.2.3 Denormalized Numbers 106
3.3 Register Descriptions 107
3.3.1 Floating-Point Registers 107
3.3.2 Floating-Point Status/Control Register (FPSCR) 108
3.3.3 Floating-Point Communication Register (FPUL) 110
3.4 Rounding 111
3.5 FPU Exceptions 112
3.5.1 FPU Exception Sources 112
3.5.2 FPU Exception Handling 112

Section 4 Boot Mode 115
4.1 Features 115
4.2 Boot Mode and Pin Function Setting 116
4.3 Operation 117
4.3.1 Boot Modes 0 and 1 117
4.3.2 Boot Mode 2 117
4.3.3 Boot Mode 3 119
4.3.4 Boot Mode 4 121
4.3.5 Boot Mode 5 122
4.4 Notes 124
4.4.1 Boot Related Pins 124

Section 5 Clock Pulse Generator 125
5.1 Features 125
5.2 Input/Output Pins 129
5.3 Clock Mode 130
5.4 Register Descriptions 132
5.4.1 Frequency Control Register (FRQCR) 132
5.5 Changing the Frequency 135
5.5.1 Changing the Division Ratio 135
5.6 Usage of the Clock Pins 136
5.6.1 In the Case of Inputting an External Clock 136
5.6.2 In the Case of Using a Crystal Resonator 137
5.6.3 In the Case of Not Using the Clock Pin 137

chanhvinh.com

5.7 Oscillation Stabilizing Time 138
5.7.1 Oscillation Stabilizing Time of the On-chip Crystal Oscillator 138
5.7.2 Oscillation Stabilizing Time of the PLL circuit 138
5.8 Notes on Board Design 139
5.8.1 Note on Using a PLL Oscillation Circuit 139
5.9 Definition of Modulation Rate and Frequency in the SSCG Specification 140

Section 6 Exception Handling 141
6.1 Overview 141
6.1.1 Types of Exception Handling and Priority 141
6.1.2 Exception Handling Operations 142
6.1.3 Exception Handling Vector Table 144
6.2 Resets 147
6.2.1 Input/Output Pins 147
6.2.2 Types of Reset 147
6.2.3 Power-On Reset 149
6.2.4 Manual Reset 150
6.3 Address Errors 152
6.3.1 Address Error Sources 152
6.3.2 Address Error Exception Handling 153
6.4 Register Bank Errors 153
6.4.1 Register Bank Error Sources 153
6.4.2 Register Bank Error Exception Handling 153
6.5 Interrupts 154
6.5.1 Interrupt Sources 154
6.5.2 Interrupt Priority Level 155
6.5.3 Interrupt Exception Handling 156
6.6 Exceptions Triggered by Instructions 157
6.6.1 Types of Exceptions Triggered by Instructions 157
6.6.2 Trap Instructions 158
6.6.3 Slot Illegal Instructions 158
6.6.4 General Illegal Instructions 159
6.6.5 Integer Division Exceptions 159
6.6.6 FPU Exceptions 160
6.7 When Exception Sources Are Not Accepted 161
6.8 Stack Status after Exception Handling Ends 161
6.9 Usage Notes 163
6.9.1 Value of Stack Pointer (SP) 163
6.9.2 Value of Vector Base Register (VBR) 163
6.9.3 Address Errors Caused by Stacking of Address Error Exception Handling 163

chanhvinh.com

6.9.4 Interrupt Control via Modification of Interrupt Mask Bits 163
6.9.5 Note before Exception Handling Begins Running 164

Section 7 Interrupt Controller 167
7.1 Features 167
7.2 Input/Output Pins 169
7.3 Register Descriptions 170
7.3.1 Interrupt Priority Registers 01, 02, 05 to 26 (IPR01, IPR02, IPR05 to IPR26) 172
7.3.2 Interrupt Control Register 0 (ICR0) 175
7.3.3 Interrupt Control Register 1 (ICR1) 177
7.3.4 Interrupt Control Register 2 (ICR2) 178
7.3.5 IRQ Interrupt Request Register (IRQRR) 179
7.3.6 PINT Interrupt Enable Register (PINTER) 180
7.3.7 PINT Interrupt Request Register (PIRR) 181
7.3.8 Bank Control Register (IBCR) 182
7.3.9 Bank Number Register (IBNR) 183
7.4 Interrupt Sources 184
7.4.1 NMI Interrupt 184
7.4.2 User Break Interrupt 185
7.4.3 User Debugging Interface Interrupt 185
7.4.4 IRQ Interrupts 185
7.4.5 PINT Interrupts 186
7.4.6 On-Chip Peripheral Module Interrupts 187
7.5 Interrupt Exception Handling Vector Table and Priority 189
7.6 Operation 205
7.6.1 Interrupt Operation Sequence 205
7.6.2 Stack after Interrupt Exception Handling 208
7.7 Interrupt Response Time 209
7.8 Register Banks 216
7.8.1 Banked Register and Input/Output of Banks 217
7.8.2 Bank Save and Restore Operations 217
7.8.3 Save and Restore Operations after Saving to All Banks 219
7.8.4 Register Bank Exception 220
7.8.5 Register Bank Error Exception Handling 220
7.9 Data Transfer with Interrupt Request Signals 221
7.9.1 Handling Interrupt Request Signals as Sources for CPU Interrupt but Not Direct Memory Access Controller Activating 222
7.9.2 Handling Interrupt Request Signals as Sources for Activating Direct Memory Access Controller but Not CPU Interrupt 222

chanhvinh.com

7.10 Usage Note ... 223
7.10.1 Timing to Clear an Interrupt Source ... 223

Section 8 User Break Controller ... 225
8.1 Features ... 225
8.2 Input/Output Pin ... 227
8.3 Register Descriptions ... 228
8.3.1 Break Address Register (BAR) ... 229
8.3.2 Break Address Mask Register (BAMR) ... 230
8.3.3 Break Data Register (BDR) ... 231
8.3.4 Break Data Mask Register (BDMR) ... 232
8.3.5 Break Bus Cycle Register (BBR) ... 233
8.3.6 Break Control Register (BRCR) ... 235
8.4 Operation ... 239
8.4.1 Flow of the User Break Operation ... 239
8.4.2 Break on Instruction Fetch Cycle ... 240
8.4.3 Break on Data Access Cycle ... 241
8.4.4 Value of Saved Program Counter ... 242
8.4.5 Usage Examples ... 243
8.5 Usage Notes ... 246

Section 9 Cache ... 247
9.1 Features ... 247
9.1.1 Cache Structure ... 247
9.2 Register Descriptions ... 250
9.2.1 Cache Control Register 1 (CCR1) ... 250
9.2.2 Cache Control Register 2 (CCR2) ... 252
9.3 Operation ... 256
9.3.1 Searching Cache ... 256
9.3.2 Read Access ... 258
9.3.3 Prefetch Operation (Only for Operand Cache) ... 258
9.3.4 Write Operation (Only for Operand Cache) ... 259
9.3.5 Write-Back Buffer (Only for Operand Cache) ... 259
9.3.6 Coherency of Cache and External Memory or Large-Capacity On-Chip RAM ... 261
9.4 Memory-Mapped Cache ... 262
9.4.1 Address Array ... 262
9.4.2 Data Array ... 263
9.4.3 Usage Examples ... 265
9.4.4 Usage Notes ... 266

chanhvinh.com

Section 10 Bus State Controller 267
10.1 Features 267
10.2 Input/Output Pins 270
10.3 Area Overview 272
10.3.1 Address Map 272
10.3.2 Data Bus Width, Endian Specification, and Related Pin Setting for Each Area Depending on Boot Mode 273
10.4 Register Descriptions 275
10.4.1 Common Control Register (CMNCR) 277
10.4.2 CSn Space Bus Control Register (CSnBCR) (n = 0 to 5) 281
10.4.3 CSn Space Wait Control Register (CSnWCR) (n = 0 to 5) 286
10.4.4 SDRAM Control Register (SDCR) 315
10.4.5 Refresh Timer Control/Status Register (RTCSR) 319
10.4.6 Refresh Timer Counter (RTCNT) 321
10.4.7 Refresh Time Constant Register (RTCOR) 322
10.5 Operation 323
10.5.1 Endian/Access Size and Data Alignment 323
10.5.2 Normal Space Interface 330
10.5.3 Access Wait Control 335
10.5.4 $\overline{\text{CSn}}$ Assert Period Expansion 337
10.5.5 MPX-I/O Interface 338
10.5.6 SDRAM Interface 343
10.5.7 Burst ROM (Clocked Asynchronous) Interface 385
10.5.8 SRAM Interface with Byte Selection 388
10.5.9 PCMCIA Interface 393
10.5.10 Burst ROM (Clocked Synchronous) Interface 398
10.5.11 Wait between Access Cycles 399
10.5.12 Bus Arbitration 406
10.5.13 Others 409

Section 11 Direct Memory Access Controller 413
11.1 Features 413
11.2 Input/Output Pins 416
11.3 Register Descriptions 417
11.3.1 DMA Source Address Registers (SAR) 426
11.3.2 DMA Destination Address Registers (DAR) 426
11.3.3 DMA Transfer Count Registers (DMATCR) 427
11.3.4 DMA Channel Control Registers (CHCR) 427
11.3.5 DMA Reload Source Address Registers (RSAR) 438
11.3.6 DMA Reload Destination Address Registers (RDAR) 439

chanhvinh.com

11.3.7 DMA Reload Transfer Count Registers (RDMATCR) ... 440
11.3.8 DMA Operation Register (DMAOR) ... 441
11.3.9 DMA Extension Resource Selectors 0 to 7 (DMARS0 to DMARS7) ... 445
11.4 Operation ... 451
11.4.1 Transfer Flow ... 451
11.4.2 DMA Transfer Requests ... 453
11.4.3 Channel Priority ... 461
11.4.4 DMA Transfer Types ... 461
11.4.5 Number of Bus Cycles and DREQ Pin Sampling Timing ... 470
11.5 Usage Notes ... 473
11.5.1 Timing of DACK and TEND Outputs ... 473

Section 12 Multi-Function Timer Pulse Unit 2 ... 475
12.1 Features ... 475
12.2 Input/Output Pins ... 480
12.3 Register Descriptions ... 481
12.3.1 Timer Control Register (TCR) ... 485
12.3.2 Timer Mode Register (TMDR) ... 489
12.3.3 Timer I/O Control Register (TIOR) ... 492
12.3.4 Timer Interrupt Enable Register (TIER) ... 510
12.3.5 Timer Status Register (TSR) ... 513
12.3.6 Timer Buffer Operation Transfer Mode Register (TBTM) ... 518
12.3.7 Timer Input Capture Control Register (TICCR) ... 519
12.3.8 Timer A/D Converter Start Request Control Register (TADCR) ... 521
12.3.9 Timer A/D Converter Start Request Cycle Set Registers (TADCORA_4 and TADCORB_4) ... 524
12.3.10 Timer A/D Converter Start Request Cycle Set Buffer Registers (TADCOBRA_4 and TADCOBRB_4) ... 524
12.3.11 Timer Counter (TCNT) ... 525
12.3.12 Timer General Register (TGR) ... 525
12.3.13 Timer Start Register (TSTR) ... 526
12.3.14 Timer Synchronous Register (TSYR) ... 527
12.3.15 Timer Read/Write Enable Register (TRWER) ... 529
12.3.16 Timer Output Master Enable Register (TOER) ... 530
12.3.17 Timer Output Control Register 1 (TOCR1) ... 532
12.3.18 Timer Output Control Register 2 (TOCR2) ... 535
12.3.19 Timer Output Level Buffer Register (TOLBR) ... 538
12.3.20 Timer Gate Control Register (TGCR) ... 539
12.3.21 Timer Subcounter (TCNTS) ... 541
12.3.22 Timer Dead Time Data Register (TDDR) ... 542

chanhvinh.com

12.3.23 Timer Cycle Data Register (TCDR) 542
12.3.24 Timer Cycle Buffer Register (TCBR) 543
12.3.25 Timer Interrupt Skipping Set Register (TITCR) 543
12.3.26 Timer Interrupt Skipping Counter (TITCNT) 545
12.3.27 Timer Buffer Transfer Set Register (TBTER) 546
12.3.28 Timer Dead Time Enable Register (TDER) 548
12.3.29 Timer Waveform Control Register (TWCR) 549
12.3.30 Bus Master Interface 550
12.4 Operation 551
12.4.1 Basic Functions 551
12.4.2 Synchronous Operation 557
12.4.3 Buffer Operation 559
12.4.4 Cascaded Operation 563
12.4.5 PWM Modes 568
12.4.6 Phase Counting Mode 573
12.4.7 Reset-Synchronized PWM Mode 580
12.4.8 Complementary PWM Mode 583
12.4.9 A/D Converter Start Request Delaying Function 622
12.4.10 TCNT Capture at Crest and/or Trough in Complementary PWM Operation 626
12.5 Interrupt Sources 627
12.5.1 Interrupt Sources and Priorities 627
12.5.2 Activation of Direct Memory Access Controller 629
12.5.3 A/D Converter Activation 629
12.6 Operation Timing 631
12.6.1 Input/Output Timing 631
12.6.2 Interrupt Signal Timing 638
12.7 Usage Notes 642
12.7.1 Module Standby Mode Setting 642
12.7.2 Input Clock Restrictions 642
12.7.3 Caution on Period Setting 643
12.7.4 Contention between TCNT Write and Clear Operations 643
12.7.5 Contention between TCNT Write and Increment Operations 644
12.7.6 Contention between TGR Write and Compare Match 645
12.7.7 Contention between Buffer Register Write and Compare Match 646
12.7.8 Contention between Buffer Register Write and TCNT Clear 647
12.7.9 Contention between TGR Read and Input Capture 648
12.7.10 Contention between TGR Write and Input Capture 649
12.7.11 Contention between Buffer Register Write and Input Capture 650

chanhvinh.com

12.7.12 TCNT2 Write and Overflow/Underflow Contention in Cascade Connection 650
12.7.13 Counter Value during Complementary PWM Mode Stop 652
12.7.14 Buffer Operation Setting in Complementary PWM Mode 652
12.7.15 Reset Sync PWM Mode Buffer Operation and Compare Match Flag 653
12.7.16 Overflow Flags in Reset Synchronous PWM Mode 654
12.7.17 Contention between Overflow/Underflow and Counter Clearing 655
12.7.18 Contention between TCNT Write and Overflow/Underflow 656
12.7.19 Cautions on Transition from Normal Operation or PWM Mode 1 to Reset-Synchronized PWM Mode 656
12.7.20 Output Level in Complementary PWM Mode and Reset-Synchronized PWM Mode 657
12.7.21 Interrupts in Module Standby Mode 657
12.7.22 Simultaneous Capture of TCNT_1 and TCNT_2 in Cascade Connection 657
12.7.23 Notes on Output Waveform Control During Synchronous Counter Clearing in Complementary PWM Mode 658
12.8 Output Pin Initialization for Multi-Function Timer Pulse Unit 2 660
12.8.1 Operating Modes 660
12.8.2 Reset Start Operation 660
12.8.3 Operation in Case of Re-Setting Due to Error during Operation, etc 661
12.8.4 Overview of Initialization Procedures and Mode Transitions in Case of Error during Operation, etc. 662

Section 13 Compare Match Timer 693
13.1 Features 693
13.2 Register Descriptions 694
13.2.1 Compare Match Timer Start Register (CMSTR) 695
13.2.2 Compare Match Timer Control/Status Register (CMCSR) 696
13.2.3 Compare Match Counter (CMCNT) 698
13.2.4 Compare Match Constant Register (CMCOR) 698
13.3 Operation 699
13.3.1 Interval Count Operation 699
13.3.2 CMCNT Count Timing 699
13.4 Interrupts 700
13.4.1 Interrupt Sources and DMA Transfer Requests 700
13.4.2 Timing of Compare Match Flag Setting 700
13.4.3 Timing of Compare Match Flag Clearing 701
13.5 Usage Notes 702
13.5.1 Conflict between Write and Compare-Match Processes of CMCNT 702
13.5.2 Conflict between Word-Write and Count-Up Processes of CMCNT 703

chanhvinh.com

13.5.3 Conflict between Byte-Write and Count-Up Processes of CMCNT 704
13.5.4 Compare Match between CMCNT and CMCOR 704

Section 14 Watchdog Timer 705
14.1 Features 705
14.2 Input/Output Pin 706
14.3 Register Descriptions 707
14.3.1 Watchdog Timer Counter (WTCNT) 707
14.3.2 Watchdog Timer Control/Status Register (WTCSR) 708
14.3.3 Watchdog Reset Control/Status Register (WRCSR) 711
14.3.4 Notes on Register Access 712
14.4 Usage 714
14.4.1 Canceling Software Standby Mode 714
14.4.2 Using Watchdog Timer Mode 714
14.4.3 Using Interval Timer Mode 716
14.5 Usage Notes 717
14.5.1 Timer Variation 717
14.5.2 Prohibition against Setting H'FF to WTCNT 717
14.5.3 Interval Timer Overflow Flag 717
14.5.4 System Reset by $\overline{\text{WDTOVF}}$ Signal 718
14.5.5 Manual Reset in Watchdog Timer Mode 718
14.5.6 Internal Reset in Watchdog Timer Mode 718

Section 15 Realtime Clock 719
15.1 Features 719
15.2 Input/Output Pin 721
15.3 Register Descriptions 722
15.3.1 64-Hz Counter (R64CNT) 723
15.3.2 Second Counter (RSECCNT) 724
15.3.3 Minute Counter (RMINCNT) 725
15.3.4 Hour Counter (RHRCNT) 726
15.3.5 Day of Week Counter (RWKCNT) 727
15.3.6 Date Counter (RDAYCNT) 728
15.3.7 Month Counter (RMONCNT) 729
15.3.8 Year Counter (RYRCNT) 730
15.3.9 Second Alarm Register (RSECAR) 731
15.3.10 Minute Alarm Register (RMINAR) 732
15.3.11 Hour Alarm Register (RHRAR) 733
15.3.12 Day of Week Alarm Register (RWKAR) 734
15.3.13 Date Alarm Register (RDAYAR) 735

chanhvinh.com

15.3.14 Month Alarm Register (RMONAR) 736
15.3.15 Year Alarm Register (RYRAR) 737
15.3.16 Control Register 1 (RCR1) 738
15.3.17 Control Register 2 (RCR2) 740
15.3.18 Control Register 3 (RCR3) 742
15.3.19 Control Register 5 (RCR5) 743
15.3.20 Frequency Register H/L (RFRH/L) 744
15.4 Operation 746
15.4.1 Initial Settings of Registers after Power-On 746
15.4.2 Setting Time 746
15.4.3 Reading Time 747
15.4.4 Alarm Function 748
15.5 Usage Notes 749
15.5.1 Register Writing during Count 749
15.5.2 Use of Realtime Clock Periodic Interrupts 749
15.5.3 Transition to Standby Mode after Setting Register 749
15.5.4 Usage Notes when Writing to and Reading the Register 750

Section 16 Serial Communication Interface with FIFO 751
16.1 Features 751
16.2 Input/Output Pins 754
16.3 Register Descriptions 755
16.3.1 Receive Shift Register (SCRSR) 759
16.3.2 Receive FIFO Data Register (SCFRDR) 759
16.3.3 Transmit Shift Register (SCTSR) 760
16.3.4 Transmit FIFO Data Register (SCFTDR) 760
16.3.5 Serial Mode Register (SCSMR) 761
16.3.6 Serial Control Register (SCSCR) 764
16.3.7 Serial Status Register (SCFSR) 768
16.3.8 Bit Rate Register (SCBRR) 776
16.3.9 FIFO Control Register (SCFCR) 782
16.3.10 FIFO Data Count Set Register (SCFDR) 785
16.3.11 Serial Port Register (SCSPTR) 786
16.3.12 Line Status Register (SCLSR) 789
16.3.13 Serial Extension Mode Register (SCEMR) 790
16.4 Operation 791
16.4.1 Overview 791
16.4.2 Operation in Asynchronous Mode 794
16.4.3 Operation in Clock Synchronous Mode 805
16.5 Interrupts 814

chanhvinh.com

16.6 Usage Notes 815
16.6.1 SCFTDR Writing and TDFE Flag 815
16.6.2 SCFRDR Reading and RDF Flag 815
16.6.3 Restriction on Direct Memory Controller Usage 816
16.6.4 Break Detection and Processing 816
16.6.5 Sending a Break Signal 816
16.6.6 Receive Data Sampling Timing and Receive Margin (Asynchronous Mode) 816
16.6.7 Selection of Base Clock in Asynchronous Mode 818

Section 17 Renesas Serial Peripheral Interface 819
17.1 Features 819
17.2 Input/Output Pins 822
17.3 Register Descriptions 823
17.3.1 Control Register (SPCR) 825
17.3.2 Slave Select Polarity Register (SSLP) 827
17.3.3 Pin Control Register (SPPCR) 828
17.3.4 Status Register (SPSR) 830
17.3.5 Data Register (SPDR) 833
17.3.6 Sequence Control Register (SPSCR) 834
17.3.7 Sequence Status Register (SPSSR) 836
17.3.8 Bit Rate Register (SPBR) 837
17.3.9 Data Control Register (SPDCR) 838
17.3.10 Clock Delay Register (SPCKD) 840
17.3.11 Slave Select Negation Delay Register (SSLND) 841
17.3.12 Next-Access Delay Register (SPND) 842
17.3.13 Command Register (SPCMD) 843
17.3.14 Buffer Control Register (SPBFCR) 848
17.3.15 Buffer Data Count Setting Register (SPBFDR) 850
17.4 Operation 851
17.4.1 Overview of Operations 851
17.4.2 Pin Control 852
17.4.3 System Configuration Example 853
17.4.4 Transfer Format 856
17.4.5 Data Format 858
17.4.6 Error Detection 870
17.4.7 Initialization 875
17.4.8 SPI Operation 876
17.4.9 Error Handling 889
17.4.10 Loopback Mode 890

chanhvinh.com

17.4.11 Interrupt Sources 891

Section 18 Renesas Quad Serial Peripheral Interface 893
18.1 Features 893
18.2 Input/Output Pins 895
18.3 Register Descriptions 896
18.3.1 Control Register (SPCR) 899
18.3.2 Slave Select Polarity Register (SSLP) 900
18.3.3 Pin Control Register (SPPCR) 901
18.3.4 Status Register (SPSR) 903
18.3.5 Data Register (SPDR) 906
18.3.6 Sequence Control Register (SPSCR) 907
18.3.7 Sequence Status Register (SPSSR) 908
18.3.8 Bit Rate Register (SPBR) 909
18.3.9 Data Control Register (SPDCR) 911
18.3.10 Clock Delay Register (SPCKD) 912
18.3.11 Slave Select Negation Delay Register (SSLND) 913
18.3.12 Next-Access Delay Register (SPND) 914
18.3.13 Command Register n (SPCMDn) (n = 0 to 3) 915
18.3.14 Buffer Control Register (SPBFCR) 921
18.3.15 Buffer Data Count Register (SPBDCR) 923
18.3.16 Transfer Data Length Multiplier Setting Register n (SPBMULn) (n = 0, 1, 2, 3) 924
18.4 Operation 925
18.4.1 Overview of Operations 925
18.4.2 Pin Control 927
18.4.3 Transfer Format 928
18.4.4 Transfer Data 931
18.4.5 Non-Normal Transfer Operations 938
18.4.6 Initialization 939
18.4.7 SPI Operation 939
18.4.8 Interrupt Sources 953
18.4.9 Loopback Mode 954

Section 19 SPI Multi I/O Bus Controller 955
19.1 Features 955
19.2 Block Diagram 956
19.3 Input/Output Pins 957
19.4 Register Descriptions 958
19.4.1 Common Control Register (CMNCR) 959

chanhvinh.com

19.4.2 SSL Delay Register (SSLDR) ... 964
19.4.3 Bit Rate Register (SPBCR) ... 966
19.4.4 Data Read Control Register (DRCR) ... 968
19.4.5 Data Read Command Setting Register (DRCMR) ... 970
19.4.6 Data Read Extended Address Setting Register (DREAR) ... 971
19.4.7 Data Read Option Setting Register (DROPR) ... 973
19.4.8 Data Read Enable Setting Register (DRENR) ... 974
19.4.9 SPI Mode Control Register (SMCR) ... 977
19.4.10 SPI Mode Command Setting Register (SMCMR) ... 979
19.4.11 SPI Mode Address Setting Register (SMADR) ... 980
19.4.12 SPI Mode Option Setting Register (SMOPR) ... 981
19.4.13 SPI Mode Enable Setting Register (SMENR) ... 982
19.4.14 SPI Mode Read Data Register 0 (SMRDR0) ... 986
19.4.15 SPI Mode Read Data Register 1 (SMRDR1) ... 987
19.4.16 SPI Mode Write Data Register 0 (SMWDR0) ... 988
19.4.17 SPI Mode Write Data Register 1 (SMWDR1) ... 989
19.4.18 Common Status Register (CMNSR) ... 990
19.5 Operation ... 991
19.5.1 System Configuration ... 991
19.5.2 Address Map ... 992
19.5.3 32-bit Serial Flash Addresses ... 993
19.5.4 Data Alignment ... 994
19.5.5 Operating Modes ... 995
19.5.6 External Address Space Read Mode ... 995
19.5.7 Read Cache ... 1000
19.5.8 SPI Operating Mode ... 1001
19.5.9 Transfer Format ... 1006
19.5.10 Data Format ... 1008
19.5.11 Data Pin Control ... 1016
19.5.12 SPBSSL Pin Control ... 1018
19.5.13 Flags ... 1019
19.6 Usage Note ... 1019
19.6.1 Note on Transfer Start from SPBSSL Hold State in SPI Operation Mode ... 1019

Section 20 I^2C Bus Interface 3 ... 1021
20.1 Features ... 1021
20.2 Input/Output Pins ... 1023
20.3 Register Descriptions ... 1024
20.3.1 I^2C Bus Control Register 1 (ICCR1) ... 1025
20.3.2 I^2C Bus Control Register 2 (ICCR2) ... 1028

chanhvinh.com

20.3.3 I²C Bus Mode Register (ICMR) 1030
20.3.4 I²C Bus Interrupt Enable Register (ICIER) 1032
20.3.5 I²C Bus Status Register (ICSR) 1034
20.3.6 Slave Address Register (SAR) 1037
20.3.7 I²C Bus Transmit Data Register (ICDRT) 1037
20.3.8 I²C Bus Receive Data Register (ICDRR) 1038
20.3.9 I²C Bus Shift Register (ICDRS) 1038
20.3.10 NF2CYC Register (NF2CYC) 1039
20.4 Operation 1040
20.4.1 I²C Bus Format 1040
20.4.2 Master Transmit Operation 1041
20.4.3 Master Receive Operation 1043
20.4.4 Slave Transmit Operation 1045
20.4.5 Slave Receive Operation 1048
20.4.6 Clocked Synchronous Serial Format 1049
20.4.7 Noise Filter 1053
20.4.8 Example of Use 1054
20.5 Interrupt Requests 1058
20.6 Bit Synchronous Circuit 1059
20.7 Usage Notes 1061
20.7.1 Note on Setting for Multi-Master Operation 1061
20.7.2 Note on Master Receive Mode 1061
20.7.3 Note on Setting ACKBT in Master Receive Mode 1062
20.7.4 Note on the States of Bits MST and TRN when Arbitration is Lost 1062
20.7.5 Note on I²C-Bus Interface Master Receive Mode 1062
20.7.6 Note on IICRST and BBSY bits 1062
20.7.7 Note on Issuance of Stop Conditions in Master Transmit Mode while ACKE = 1 1062

Section 21 Serial Sound Interface 1063
21.1 Features 1063
21.2 Input/Output Pins 1065
21.3 Register Description 1066
21.3.1 Control Register (SSICR) 1069
21.3.2 Status Register (SSISR) 1077
21.3.3 Transmit Data Register (SSITDR) 1081
21.3.4 Receive Data Register (SSIRDR) 1081
21.3.5 FIFO Control Register (SSIFCR) 1082
21.3.6 FIFO Status Register (SSIFSR) 1085
21.3.7 Transmit FIFO Data Register (SSIFTDR) 1088

chanhvinh.com

21.3.8 Receive FIFO Data Register (SSIFRDR) 1089
21.3.9 TDM Mode Register (SSITDMR) 1090
21.4 Operation Description 1091
21.4.1 Bus Format 1091
21.4.2 Non-Compressed Modes 1093
21.4.3 TDM Mode 1103
21.4.4 WS Continue Mode 1104
21.4.5 Operation Modes 1105
21.4.6 Transmit Operation 1106
21.4.7 Receive Operation 1109
21.4.8 Serial Bit Clock Control 1112
21.5 Usage Notes 1113
21.5.1 Limitations from Underflow or Overflow during DMA Operation 1113
21.5.2 Note on Changing Mode from Master Transceiver to Master Receiver 1113
21.5.3 Limits on TDM mode and WS Continue Mode 1113

Section 22 Serial I/O with FIFO 1115
22.1 Features 1115
22.2 Input/Output Pins 1117
22.3 Register Descriptions 1118
22.3.1 Mode Register (SIMDR) 1119
22.3.2 Control Register (SICTR) 1121
22.3.3 Transmit Data Register (SITDR) 1124
22.3.4 Receive Data Register (SIRDR) 1125
22.3.5 Status Register (SISTR) 1126
22.3.6 Interrupt Enable Register (SIIER) 1131
22.3.7 FIFO Control Register (SIFCTR) 1133
22.3.8 Clock Select Register (SISCR) 1135
22.3.9 Transmit Data Assign Register (SITDAR) 1136
22.3.10 Receive Data Assign Register (SIRDAR) 1138
22.4 Operation 1139
22.4.1 Serial Clocks 1139
22.4.2 Serial Timing 1140
22.4.3 Transfer Data Format 1141
22.4.4 Register Allocation of Transfer Data 1142
22.4.5 FIFO 1144
22.4.6 Transmit and Receive Procedures 1146
22.4.7 Interrupts 1151
22.4.8 Transmit and Receive Timing 1153

chanhvinh.com

Section 23 Controller Area Network 1157
23.1 Summary 1157
23.1.1 Overview 1157
23.1.2 Scope 1157
23.1.3 Audience 1157
23.1.4 References 1158
23.1.5 Features 1158
23.2 Architecture 1159
23.3 Programming Model - Overview 1162
23.3.1 Memory Map 1162
23.3.2 Mailbox Structure 1164
23.3.3 Control Registers 1180
23.3.4 Mailbox Registers 1201
23.3.5 Timer Registers 1215
23.4 Application Note 1228
23.4.1 Test Mode Settings 1228
23.4.2 Configuration of This Module 1230
23.4.3 Message Transmission Sequence 1234
23.4.4 Message Receive Sequence 1249
23.4.5 Reconfiguration of Mailbox 1251
23.5 Interrupt Sources 1253
23.6 DMAC Interface 1254
23.7 CAN Bus Interface 1255
23.8 Setting I/O Ports 1256
23.9 Usage Notes 1259
23.9.1 Notes on Port Setting for Multiple Channels Used as Single Channel with 64 or 96 Mailboxes 1259

Section 24 IEBus™ Controller 1261
24.1 Features 1261
24.1.1 IEBus Communications Protocol 1263
24.1.2 Communications Protocol 1267
24.1.3 Transfer Data (Data Field Contents) 1275
24.1.4 Bit Format 1278
24.1.5 Configuration 1279
24.2 Input/Output Pins 1280
24.3 Register Descriptions 1281
24.3.1 IEBus Control Register (IECTR) 1283
24.3.2 IEBus Command Register (IECMR) 1284
24.3.3 IEBus Master Control Register (IEMCR) 1286

chanhvinh.com

24.3.4 IEBus Master Unit Address Register 1 (IEAR1) 1288
24.3.5 IEBus Master Unit Address Register 2 (IEAR2) 1289
24.3.6 IEBus Slave Address Setting Register 1 (IESA1) 1289
24.3.7 IEBus Slave Address Setting Register 2 (IESA2) 1290
24.3.8 IEBus Transmit Message Length Register (IETBFL) 1290
24.3.9 IEBus Reception Master Address Register 1 (IEMA1) 1291
24.3.10 IEBus Reception Master Address Register 2 (IEMA2) 1292
24.3.11 IEBus Receive Control Field Register (IERCTL) 1293
24.3.12 IEBus Receive Message Length Register (IERBFL) 1294
24.3.13 IEBus Lock Address Register 1 (IELA1) 1294
24.3.14 IEBus Lock Address Register 2 (IELA2) 1295
24.3.15 IEBus General Flag Register (IEFLG) 1296
24.3.16 IEBus Transmit Status Register (IETSR) 1299
24.3.17 IEBus Transmit Interrupt Enable Register (IEIET) 1303
24.3.18 IEBus Receive Status Register (IERSR) 1305
24.3.19 IEBus Receive Interrupt Enable Register (IEIER) 1309
24.3.20 IEBus Clock Selection Register (IECKSR) 1310
24.3.21 IEBus Transmit Data Buffer 001 to 128 (IETB001 to IETB128) 1312
24.3.22 IEBus Receive Data Buffer 001 to 128 (IERB001 to IERB128) 1313
24.4 Data Format 1314
24.4.1 Transmission Format 1314
24.4.2 Reception Format 1315
24.5 Software Control Flows 1316
24.5.1 Initial Setting 1316
24.5.2 Master Transmission 1317
24.5.3 Slave Reception 1318
24.5.4 Master Reception 1319
24.5.5 Slave Transmission 1320
24.6 Operation Timing 1321
24.6.1 Master Transmit Operation 1321
24.6.2 Slave Receive Operation 1322
24.6.3 Master Receive Operation 1323
24.6.4 Slave Transmit Operation 1324
24.7 Interrupt Sources 1325
24.8 Usage Notes 1327
24.8.1 Note on Operation when Transfer is Incomplete after Transfer of the Maximum Number of Bytes 1327

Section 25 Renesas SPDIF Interface 1329
25.1 Overview 1329

chanhvinh.com

25.2 Features 1329
25.3 Functional Block Diagram 1330
25.4 Input/Output Pins 1331
25.5 Renesas SPDIF (IEC60958) Frame Format 1331
25.6 Register 1333
25.7 Register Descriptions 1334
25.7.1 Control Register (CTRL) 1334
25.7.2 Status Register (STAT) 1339
25.7.3 Transmitter Channel 1 Audio Register (TLCA) 1343
25.7.4 Transmitter Channel 2 Audio Register (TRCA) 1344
25.7.5 Transmitter DMA Audio Data Register (TDAD) 1345
25.7.6 Transmitter User Data Register (TUI) 1346
25.7.7 Transmitter Channel 1 Status Register (TLCS) 1347
25.7.8 Transmitter Channel 2 Status Register (TRCS) 1349
25.7.9 Receiver Channel 1 Audio Register (RLCA) 1351
25.7.10 Receiver Channel 2 Audio Register (RRCA) 1352
25.7.11 Receiver DMA Audio Data (RDAD) 1353
25.7.12 Receiver User Data Register (RUI) 1354
25.7.13 Receiver Channel 1 Status Register (RLCS) 1355
25.7.14 Receiver Channel 2 Status Register (RRCS) 1357
25.8 Functional Description—Transmitter 1359
25.8.1 Transmitter Module 1359
25.8.2 Transmitter Module Initialization 1360
25.8.3 Initial Settings for Transmitter Module 1360
25.8.4 Transmitter Module Data Transfer 1361
25.9 Functional Description—Receiver 1363
25.9.1 Receiver Module 1363
25.9.2 Receiver Module Initialization 1364
25.9.3 Receiver Module Data Transfer 1364
25.10 Disabling the Module 1367
25.10.1 Transmitter and Receiver Idle 1367
25.11 Compressed Mode Data 1367
25.12 References 1367
25.13 Usage Notes 1368
25.13.1 Clearing TUIR 1368
25.13.2 Frequency of Clock Input for Audio 1368

Section 26 CD-ROM Decoder 1369
26.1 Features 1369
26.1.1 Formats Supported by CD-ROM Decoder 1370

chanhvinh.com

26.2 Block Diagrams 1371
26.3 Register Descriptions 1375
26.3.1 Enable Control Register (CROMEN) 1378
26.3.2 Sync Code-Based Synchronization Control Register (CROMSY0) 1379
26.3.3 Decoding Mode Control Register (CROMCTL0) 1380
26.3.4 EDC/ECC Check Control Register (CROMCTL1) 1382
26.3.5 Automatic Decoding Stop Control Register (CROMCTL3) 1383
26.3.6 Decoding Option Setting Control Register (CROMCTL4) 1384
26.3.7 HEAD20 to HEAD22 Representation Control Register (CROMCTL5) 1386
26.3.8 Sync Code Status Register (CROMST0) 1387
26.3.9 Post-ECC Header Error Status Register (CROMST1) 1388
26.3.10 Post-ECC Subheader Error Status Register (CROMST3) 1389
26.3.11 Header/Subheader Validity Check Status Register (CROMST4) 1390
26.3.12 Mode Determination and Link Sector Detection Status Register (CROMST5) 1391
26.3.13 ECC/EDC Error Status Register (CROMST6) 1392
26.3.14 Buffer Status Register (CBUFST0) 1394
26.3.15 Decoding Stoppage Source Status Register (CBUFST1) 1395
26.3.16 Buffer Overflow Status Register (CBUFST2) 1396
26.3.17 Pre-ECC Correction Header: Minutes Data Register (HEAD00) 1396
26.3.18 Pre-ECC Correction Header: Seconds Data Register (HEAD01) 1397
26.3.19 Pre-ECC Correction Header: Frames (1/75 Second) Data Register (HEAD02) 1397
26.3.20 Pre-ECC Correction Header: Mode Data Register (HEAD03) 1398
26.3.21 Pre-ECC Correction Subheader: File Number (Byte 16) Data Register (SHEAD00) 1398
26.3.22 Pre-ECC Correction Subheader: Channel Number (Byte 17) Data Register (SHEAD01) 1399
26.3.23 Pre-ECC Correction Subheader: Sub-Mode (Byte 18) Data Register (SHEAD02) 1399
26.3.24 Pre-ECC Correction Subheader: Data Type (Byte 19) Data Register (SHEAD03) 1400
26.3.25 Pre-ECC Correction Subheader: File Number (Byte 20) Data Register (SHEAD04) 1400
26.3.26 Pre-ECC Correction Subheader: Channel Number (Byte 21) Data Register (SHEAD05) 1401
26.3.27 Pre-ECC Correction Subheader: Sub-Mode (Byte 22) Data Register (SHEAD06) 1401
26.3.28 Pre-ECC Correction Subheader: Data Type (Byte 23) Data Register (SHEAD07) 1402

chanhvinh.com

26.3.29 Post-ECC Correction Header: Minutes Data Register (HEAD20) 1402
26.3.30 Post-ECC Correction Header: Seconds Data Register (HEAD21) 1403
26.3.31 Post-ECC Correction Header: Frames (1/75 Second) Data Register (HEAD22) 1403
26.3.32 Post-ECC Correction Header: Mode Data Register (HEAD23) 1404
26.3.33 Post-ECC Correction Subheader: File Number (Byte 16) Data Register (SHEAD20) 1404
26.3.34 Post-ECC Correction Subheader: Channel Number (Byte 17) Data Register (SHEAD21) 1405
26.3.35 Post-ECC Correction Subheader: Sub-Mode (Byte 18) Data Register (SHEAD22) 1405
26.3.36 Post-ECC Correction Subheader: Data Type (Byte 19) Data Register (SHEAD23) 1406
26.3.37 Post-ECC Correction Subheader: File Number (Byte 20) Data Register (SHEAD24) 1406
26.3.38 Post-ECC Correction Subheader: Channel Number (Byte 21) Data Register (SHEAD25) 1407
26.3.39 Post-ECC Correction Subheader: Sub-Mode (Byte 22) Data Register (SHEAD26) 1407
26.3.40 Post-ECC Correction Subheader: Data Type (Byte 23) Data Register (SHEAD27) 1408
26.3.41 Automatic Buffering Setting Control Register 0 (CBUFCTL0) 1408
26.3.42 Automatic Buffering Start Sector Setting: Minutes Control Register (CBUFCTL1) 1410
26.3.43 Automatic Buffering Start Sector Setting: Seconds Control Register (CBUFCTL2) 1410
26.3.44 Automatic Buffering Start Sector Setting: Frames Control Register (CBUFCTL3) 1411
26.3.45 ISY Interrupt Source Mask Control Register (CROMST0M) 1411
26.3.46 CD-ROM Decoder Reset Control Register (ROMDECRST) 1412
26.3.47 CD-ROM Decoder Reset Status Register (RSTSTAT) 1413
26.3.48 Serial Sound Interface Data Control Register (SSI) 1413
26.3.49 Interrupt Flag Register (INTHOLD) 1416
26.3.50 Interrupt Source Mask Control Register (INHINT) 1417
26.3.51 CD-ROM Decoder Stream Data Input Register (STRMDIN0) 1418
26.3.52 CD-ROM Decoder Stream Data Input Register (STRMDIN2) 1418
26.3.53 CD-ROM Decoder Stream Data Output Register (STRMDOUT0) 1419
26.4 Operation 1420
26.4.1 Endian Conversion for Data in the Input Stream 1420
26.4.2 Sync Code Maintenance Function 1421

chanhvinh.com

26.4.3 Error Correction 1426
26.4.4 Automatic Decoding Stop Function 1427
26.4.5 Buffering Format 1428
26.4.6 Target-Sector Buffering Function 1430
26.5 Interrupt Sources 1432
26.5.1 Interrupt and DMA Transfer Request Signals 1432
26.5.2 Timing of Status Registers Updates 1434
26.6 Usage Notes 1434
26.6.1 Stopping and Resuming Buffering Alone during Decoding 1434
26.6.2 When CROMST0 Status Register Bits are Set 1434
26.6.3 Link Blocks 1435
26.6.4 Stopping and Resuming CD-DSP Operation 1435
26.6.5 Note on Clearing the IREADY Flag 1435
26.6.6 Note on Stream Data Transfer (1) 1436
26.6.7 Note on Stream Data Transfer (2) 1436

Section 27 A/D Converter 1437
27.1 Features 1437
27.2 Input/Output Pins 1439
27.3 Register Descriptions 1440
27.3.1 A/D Data Registers A to H (ADDRA to ADDRH) 1441
27.3.2 A/D Control/Status Register (ADCSR) 1442
27.4 Operation 1446
27.4.1 Single Mode 1446
27.4.2 Multi Mode 1449
27.4.3 Scan Mode 1451
27.4.4 A/D Converter Activation by External Trigger or Multi-Function Timer Pulse Unit 2 1454
27.4.5 Input Sampling and A/D Conversion Time 1454
27.4.6 External Trigger Input Timing 1457
27.5 Interrupt Sources and DMA Transfer Request 1458
27.6 Definitions of A/D Conversion Accuracy 1459
27.7 Usage Notes 1460
27.7.1 Module Standby Mode Setting 1460
27.7.2 Setting Analog Input Voltage 1460
27.7.3 Notes on Board Design 1460
27.7.4 Processing of Analog Input Pins 1461
27.7.5 Permissible Signal Source Impedance 1462
27.7.6 Influences on Absolute Precision 1463
27.7.7 Note on Usage in Scan Mode and Multi Mode 1463

chanhvinh.com

Section 28 NAND Flash Memory Controller 1465
28.1 Features 1465
28.2 Input/Output Pins 1468
28.3 Register Descriptions 1469
28.3.1 Common Control Register (FLCMNCR) 1470
28.3.2 Command Control Register (FLCMDCR) 1473
28.3.3 Command Code Register (FLCMCDR) 1476
28.3.4 Address Register (FLADR) 1477
28.3.5 Address Register 2 (FLADR2) 1479
28.3.6 Data Counter Register (FLDTCNTR) 1480
28.3.7 Data Register (FLDATAR) 1481
28.3.8 Interrupt DMA Control Register (FLINTDMACR) 1482
28.3.9 Ready Busy Timeout Setting Register (FLBSYTMR) 1487
28.3.10 Ready Busy Timeout Counter (FLBSYCNT) 1488
28.3.11 Data FIFO Register (FLDTFIFO) 1489
28.3.12 Control Code FIFO Register (FLECFIFO) 1490
28.3.13 Transfer Control Register (FLTRCR) 1491
28.3.14 Bus Hold Time Setting Register (FLHOLDCR) 1492
28.4 Operation 1493
28.4.1 Access Sequence 1493
28.4.2 Operating Modes 1493
28.4.3 Register Setting Procedure 1494
28.4.4 Command Access Mode 1495
28.4.5 Sector Access Mode 1499
28.4.6 Status Read 1504
28.5 Interrupt Sources 1505
28.6 DMA Transfer Specifications 1505
28.7 Usage Notes 1506
28.7.1 External Bus Mastership Release Timing 1506
28.7.2 Usage Notes for the SNAND Bit 1507

Section 29 USB 2.0 Host/Function Module 1509
29.1 Features 1509
29.2 Input/Output Pins 1511
29.3 Register Description 1513
29.3.1 System Configuration Control Register (SYSCFG) 1516
29.3.2 CPU Bus Wait Setting Register (BUSWAIT) 1521
29.3.3 System Configuration Status Register (SYSSTS) 1522
29.3.4 Device State Control Register (DVSTCTR) 1523
29.3.5 Test Mode Register (TESTMODE) 1529

chanhvinh.com

29.3.6 DMA-FIFO Bus Configuration Registers (D0FBCFG, D1FBCFG) 1532
29.3.7 FIFO Port Registers (CFIFO, D0FIFO, D1FIFO) 1533
29.3.8 FIFO Port Select Registers (CFIFOSEL, D0FIFOSEL, D1FIFOSEL)..... 1535
29.3.9 FIFO Port Control Registers (CFIFOCTR, D0FIFOCTR, D1FIFOCTR) 1543
29.3.10 Interrupt Enable Register 0 (INTENB0) 1547
29.3.11 Interrupt Enable Register 1 (INTENB1) 1549
29.3.12 BRDY Interrupt Enable Register (BRDYENB) 1551
29.3.13 NRDY Interrupt Enable Register (NRDYENB) 1552
29.3.14 BEMP Interrupt Enable Register (BEMPENB) 1554
29.3.15 SOF Output Configuration Register (SOFCFG) 1555
29.3.16 Interrupt Status Register 0 (INTSTS0) 1557
29.3.17 Interrupt Status Register 1 (INTSTS1) 1562
29.3.18 BRDY Interrupt Status Register (BRDYSTS) 1568
29.3.19 NRDY Interrupt Status Register (NRDYSTS) 1570
29.3.20 BEMP Interrupt Status Register (BEMPSTS) 1572
29.3.21 Frame Number Register (FRMNUM) 1573
29.3.22 µFrame Number Register (UFRMNUM) 1576
29.3.23 USB Address Register (USBADDR) 1577
29.3.24 USB Request Type Register (USBREQ) 1578
29.3.25 USB Request Value Register (USBVAL) 1579
29.3.26 USB Request Index Register (USBINDX) 1580
29.3.27 USB Request Length Register (USBLENG) 1581
29.3.28 DCP Configuration Register (DCPCFG) 1582
29.3.29 DCP Maximum Packet Size Register (DCPMAXP) 1583
29.3.30 DCP Control Register (DCPCTR) 1584
29.3.31 Pipe Window Select Register (PIPESEL) 1594
29.3.32 Pipe Configuration Register (PIPECFG) 1595
29.3.33 Pipe Buffer Setting Register (PIPEBUF) 1602
29.3.34 Pipe Maximum Packet Size Register (PIPEMAXP) 1605
29.3.35 Pipe Timing Control Register (PIPEPERI) 1607
29.3.36 PIPEn Control Registers (PIPEnCTR) (n = 1 to 9) 1609
29.3.37 PIPEn Transaction Counter Enable Registers (PIPEnTRE) (n = 1 to 5) 1630
29.3.38 PIPEn Transaction Counter Registers (PIPEnTRN) (n = 1 to 5) 1632
29.3.39 Device Address n Configuration Registers (DEVADDn) (n = 0 to A) 1634
29.4 Operation 1637
29.4.1 System Control and Oscillation Control 1637
29.4.2 Interrupt Functions 1642
29.4.3 Pipe Control 1665
29.4.4 FIFO Buffer Memory 1675
29.4.5 Control Transfers (DCP) 1689

chanhvinh.com

29.4.6 Bulk Transfers (PIPE1 to PIPE5) 1693
29.4.7 Interrupt Transfers (PIPE6 to PIPE9) 1695
29.4.8 Isochronous Transfers (PIPE1 and PIPE2) 1696
29.4.9 SOF Interpolation Function 1708
29.4.10 Pipe Schedule 1709
29.5 Usage Notes 1711
29.5.1 Power Supply for USB Transceiver 1711

Section 30 Digital Video Decoder 1713
30.1 Features 1713
30.2 Block Diagram 1715
30.3 Input/Output Pins 1716
30.4 Register Descriptions 1717
30.4.1 ADC Control Register 1 (ADCCR1) 1722
30.4.2 Timing Generation Control Register 1 (TGCR1) 1723
30.4.3 Timing Generation Control Register 2 (TGCR2) 1724
30.4.4 Timing Generation Control Register 3 (TGCR3) 1725
30.4.5 Sync Separation Control Register 1 (SYNSCR1) 1729
30.4.6 Sync Separation Control Register 2 (SYNSCR2) 1735
30.4.7 Sync Separation Control Register 3 (SYNSCR3) 1737
30.4.8 Sync Separation Control Register 4 (SYNSCR4) 1739
30.4.9 Sync Separation Control Register 5 (SYNSCR5) 1741
30.4.10 Horizontal AFC Control Register 1 (HAFCCR1) 1743
30.4.11 Horizontal AFC Control Register 2 (HAFCCR2) 1746
30.4.12 Horizontal AFC Control Register 3 (HAFCCR3) 1748
30.4.13 Vertical Countdown Control Register 1 (VCDWCR1) 1749
30.4.14 Digital Clamp Control Register 1 (DCPCR1) 1751
30.4.15 Digital Clamp Control Register 2 (DCPCR2) 1753
30.4.16 Digital Clamp Control Register 3 (DCPCR3) 1755
30.4.17 Digital Clamp Control Register 4 (DCPCR4) 1756
30.4.18 Digital Clamp Control Register 5 (DCPCR5) 1757
30.4.19 Digital Clamp Control Register 6 (DCPCR6) 1758
30.4.20 Digital Clamp Control Register 7 (DCPCR7) 1759
30.4.21 Digital Clamp Control Register 8 (DCPCR8) 1760
30.4.22 Noise Detection Control Register (NSDCR) 1761
30.4.23 Burst Lock/Chroma Decoding Control Register (BTLCR) 1763
30.4.24 Burst Gate Pulse Control Register (BTGPCR) 1768
30.4.25 ACC Control Register 1 (ACCCR1) 1770
30.4.26 ACC Control Register 2 (ACCCR2) 1774
30.4.27 ACC Control Register 3 (ACCCR3) 1775

chanhvinh.com

30.4.28 TINT Control Register (TINTCR) 1777
30.4.29 Y/C Delay/Chroma Decoding Control Register (YCDCR) 1779
30.4.30 AGC Control Register 1 (AGCCR1) 1781
30.4.31 AGC Control Register 2 (AGCCR2) 1784
30.4.32 Peak Limiter Control Register (PKLIMTCR) 1785
30.4.33 Over-Range Control Register 1 (RGORCR1) 1788
30.4.34 Over-Range Control Register 2 (RGORCR2) 1789
30.4.35 Over-Range Control Register 3 (RGORCR3) 1790
30.4.36 Over-Range Control Register 4 (RGORCR4) 1791
30.4.37 Over-Range Control Register 5 (RGORCR5) 1792
30.4.38 Over-Range Control Register 6 (RGORCR6) 1793
30.4.39 Over-Range Control Register 7 (RGORCR7) 1794
30.4.40 Feedback Control Register for Horizontal AFC Phase Comparator (AFCPFCR) 1796
30.4.41 Register Update Enable Register (RUPDCR) 1798
30.4.42 Sync Separation Status/Vertical Cycle Read Register (VSYNCSR) 1799
30.4.43 Horizontal Cycle Read Register (HSYNCSR) 1801
30.4.44 Digital Clamp Read Register 1 (DCPSR1) 1802
30.4.45 Digital Clamp Read Register 2 (DCPSR2) 1803
30.4.46 Noise Detection Read Register (NSDSR) 1804
30.4.47 Chroma Decoding Read Register 1 (CROMASR1) 1805
30.4.48 Chroma Decode Read Register 2 (CROMASR2) 1807
30.4.49 Sync Separation Read Register (SYNCSSR) 1809
30.4.50 AGC Control Read Register 1 (AGCCSR1) 1810
30.4.51 AGC Control Read Register 2 (AGCCSR2) 1811
30.4.52 Y/C Separation Control Register 3 (YCSCR3) 1812
30.4.53 Y/C Separation Control Register 4 (YCSCR4) 1813
30.4.54 Y/C Separation Control Register 5 (YCSCR5) 1814
30.4.55 Y/C Separation Control Register 6 (YCSCR6) 1815
30.4.56 Y/C Separation Control Register 7 (YCSCR7) 1816
30.4.57 Y/C Separation Control Register 8 (YCSCR8) 1818
30.4.58 Y/C Separation Control Register 9 (YCSCR9) 1820
30.4.59 Y/C Separation Control Register 11 (YCSCR11) 1824
30.4.60 Y/C Separation Control Register 12 (YCSCR12) 1825
30.4.61 Digital Clamp Control Register 9 (DCPCR9) 1828
30.4.62 Chroma Filter TAP Coefficient (WA_F0 to WA_F8) Registers for Y/C Separation (YCTWA_F0 to YCTWA_F8) 1830
30.4.63 Chroma Filter TAP Coefficient (WB_F0 to WB_F8) Registers for Y/C Separation (YCTWB_F0 to YCTWB_F8) 1832

chanhvinh.com

30.4.64 Chroma Filter TAP Coefficient (NA_F0 to NA_F8) Registers for Y/C Separation (YCTNA_F0 to YCTNA_F8) ... 1834
30.4.65 Chroma Filter TAP Coefficient (NB_F0 to NB_F8) Registers for Y/C Separation (YCTNB_F0 to YCTNB_F8) ... 1836
30.4.66 Luminance (Y) Signal Gain Control Register (YGAINCR) ... 1838
30.4.67 Color Difference (Cb) Signal Gain Control Register (CBGAINCR) ... 1839
30.4.68 Color Difference (Cr) Signal Gain Control Register (CRGAINCR) ... 1840
30.4.69 PGA Register Update (PGA_UPDATE) ... 1841
30.4.70 PGA Control Register (PGACR) ... 1842
30.4.71 ADC Control Register 2 (ADCCR2) ... 1844
30.5 Operation ... 1845
30.5.1 Overview ... 1845
30.5.2 A/D Converter for Video Signal Input ... 1847
30.5.3 Sync Separator Circuit ... 1850
30.5.4 Burst Controlled Oscillator (BCO) ... 1855
30.5.5 Y/C Separator Circuit ... 1857
30.5.6 Chroma Decoding Circuit ... 1867
30.5.7 Digital Clamp Circuit ... 1869
30.5.8 Output Control Circuit ... 1871
30.6 Recommended Setting ... 1873
30.7 Connection Example ... 1879

Section 31 Video Display Controller 4 (1): Overview ... 1881
31.1 Features ... 1881
31.2 Block Diagram ... 1885
31.3 Input/Output Pins ... 1886
31.4 Clocks ... 1887
31.5 Hsync and Vsync Signals ... 1888

Section 32 Video Display Controller 4 (2): Input Controller ... 1891
32.1 Input Controller Functions ... 1891
32.1.1 Overview of Functions ... 1891
32.1.2 Updating Registers of External Signal Input Block and Sync Signal Adjustment Block ... 1892
32.1.3 Selecting Input Signals ... 1893
32.1.4 Controlling Externally Input Video Signals ... 1894
32.1.5 Selecting Clock Edge for Externally Input Signals ... 1895
32.1.6 Externally Input Sync Signal Inversion Control ... 1895
32.1.7 Bit Allocation of Externally Input Video Image Signals ... 1896
32.1.8 Typical Signal Timing of BT601 Format ... 1901

chanhvinh.com

32.1.9 Typical Signal Timing of BT656 Format 1904
32.1.10 SAV/EAV Code in BT656 Format 1906
32.1.11 BT656/BT601 Format Setting 1910
32.1.12 YCbCr444/RBG888/666/565 Input Timing 1912
32.1.13 Field Differentiation and Vsync Signal Phase Adjustment 1914
32.1.14 Vsync Signal Delay Adjustment in Line Units 1915
32.1.15 Sync Signal Delay Adjustment 1916
32.1.16 Horizontal Noise Reduction 1916
32.1.17 Color Matrix 1920
32.2 Register Descriptions 1925
32.2.1 External Input Block Register Update Control Register (INP_UPDATE) 1927
32.2.2 Input Select Control Register (INP_SEL_CNT) 1927
32.2.3 External Input Sync Signal Control Register (INP_EXT_SYNC_CNT) 1930
32.2.4 Vsync Signal Phase Adjustment Register (INP_VSYNC_PH_ADJ) 1932
32.2.5 Sync Signal Delay Adjustment Register (INP_DLY_ADJ) 1932
32.2.6 Image Quality Adjustment Block Register Update Control Register (IMGCNT_UPDATE) 1934
32.2.7 NR Control Register 0 (IMGCNT_NR_CNT0) 1935
32.2.8 NR Control Register 1 (IMGCNT_NR_CNT1) 1937
32.2.9 Image Quality Adjustment Block Matrix Mode Register (IMGCNT_MTX_MODE) 1939
32.2.10 Image Quality Adjustment Block Matrix YG Adjustment Register 0 (IMGCNT_MTX_YG_ADJ0) 1940
32.2.11 Image Quality Adjustment Block Matrix YG Adjustment Register 1 (IMGCNT_MTX_YG_ADJ1) 1941
32.2.12 Image Quality Adjustment Block Matrix CBB Adjustment Register 0 (IMGCNT_MTX_CBB_ADJ0) 1942
32.2.13 Image Quality Adjustment Block Matrix CBB Adjustment Register 1 (IMGCNT_MTX_CBB_ADJ1) 1943
32.2.14 Image Quality Adjustment Block Matrix CRR Adjustment Register 0 (IMGCNT_MTX_CRR_ADJ0) 1944
32.2.15 Image Quality Adjustment Block Matrix CRR Adjustment Register 1 (IMGCNT_MTX_CRR_ADJ1) 1945
32.3 Usage Methods 1946
32.3.1 Input Format Adjustment Method 1946
32.3.2 Usage Method of Conversion Color Matrix 1950

Section 33 Video Display Controller 4 (3): Scaler 1951
33.1 Scaler 1951
33.1.1 Overview of Functions 1951

chanhvinh.com

33.1.2 Register Control 1952
33.1.3 Synchronization Control 1954
33.1.4 Setting Angle of View 1961
33.1.5 Scaling Settings 1965
33.1.6 Horizontal Prefilter 1968
33.1.7 Horizontal Scale-Down 1968
33.1.8 Vertical Scale-Down 1970
33.1.9 Horizontal Scale Up 1973
33.1.10 Vertical Scale-Up 1975
33.1.11 IP Conversion 1977
33.1.12 Trimming 1981
33.1.13 Screen Synthesis 1982
33.1.14 Selecting Format for Writing Video Image Signals to Frame Buffer 1984
33.1.15 Horizontal Mirroring and Rotation 1985
33.1.16 Writing to Frame Buffer 1986
33.1.17 Selecting a Scaling-up Process or Graphics 1 Process 1991
33.1.18 Reading from Frame Buffer 1993
33.2 Register Descriptions 1994
33.2.1 SCL0 Register Update Control Register (SCL0_UPDATE) 1997
33.2.2 Mask Control Register (SCL0_FRC1) 1999
33.2.3 Missing Vsync Compensation Control Register (SCL0_FRC2) 2000
33.2.4 Output Sync Select Register (SCL0_FRC3) 2001
33.2.5 Free-Running Period Control Register (SCL0_FRC4) 2002
33.2.6 Output Delay Control Register (SCL0_FRC5) 2003
33.2.7 Full-Screen Vertical Size Register (SCL0_FRC6) 2004
33.2.8 Full-Screen Horizontal Size Register (SCL0_FRC7) 2005
33.2.9 Vsync Detection Register (SCL0_FRC9) 2006
33.2.10 Scaling-Down Control Register (SCL0_DS1) 2007
33.2.11 Vertical Capture Size Register (SCL0_DS2) 2008
33.2.12 Horizontal Capture Size Register (SCL0_DS3) 2009
33.2.13 Horizontal Scale Down Register (SCL0_DS4) 2010
33.2.14 Initial Vertical Phase Register (SCL0_DS5) 2011
33.2.15 Vertical Scaling Register (SCL0_DS6) 2012
33.2.16 Scaling-Down Control Block Output Size Register (SCL0_DS7) 2013
33.2.17 Scaling-Up Control Register (SCL0_US1) 2014
33.2.18 Output Image Vertical Size Register (SCL0_US2) 2015
33.2.19 Output Image Horizontal Size Register (SCL0_US3) 2016
33.2.20 Scaling-Up Control Block Input Size Register (SCL0_US4) 2017
33.2.21 Horizontal Scale Up Register (L0_US5) 2018
33.2.22 Horizontal Scale Up Initial Phase Register (SCL0_US6) 2019

chanhvinh.com

33.2.23 Trimming Register (SCL0_US7) 2020
33.2.24 Frame Buffer Read Select Register (SCL0_US8) 2021
33.2.25 Background Color Register (SCL0_OVR1) 2022
33.2.26 SCL1 Register Update Control Register (SCL1_UPDATE) 2023
33.2.27 Writing Mode Register (SCL1_WR1) 2024
33.2.28 Write Address Register 1 (SCL1_WR2) 2025
33.2.29 Write Address Register 2 (SCL1_WR3) 2026
33.2.30 Write Address Register 3 (SCL1_WR4) 2028
33.2.31 Frame Sub-Sampling Register (SCL1_WR5) 2029
33.2.32 Bit Reduction Register (SCL1_WR6) 2031
33.2.33 Write Detection Register (SCL1_WR7) 2032
33.2.34 Graphics 1 Register Update Control Register (GR1_UPDATE) 2033
33.2.35 Frame Buffer Read Control Register (Graphics 1) (GR1_FLM_RD) 2034
33.2.36 Frame Buffer Control Register 1 (Graphics 1) (GR1_FLM1) 2035
33.2.37 Frame Buffer Control Register 2 (Graphics 1) (GR1_FLM2) 2037
33.2.38 Frame Buffer Control Register 3 (Graphics 1) (GR1_FLM3) 2038
33.2.39 Frame Buffer Control Register 4 (Graphics 1) (GR1_FLM4) 2039
33.2.40 Frame Buffer Control Register 5 (Graphics 1) (GR1_FLM5) 2040
33.2.41 Frame Buffer Control Register 6 (Graphics 1) (GR1_FLM6) 2041
33.2.42 Alpha Blending Control Register 1 (Graphics 1) (GR1_AB1) 2043
33.2.43 Alpha Blending Control Register 2 (Graphics 1) (GR1_AB2) 2045
33.2.44 Alpha Blending Control Register 3 (Graphics 1) (GR1_AB3) 2046
33.2.45 Alpha Blending Control Register 7 (Graphics 1) (GR1_AB7) 2047
33.2.46 Alpha Blending Control Register 8 (Graphics 1) (GR1_AB8) 2048
33.2.47 Alpha Blending Control Register 9 (Graphics 1) (GR1_AB9) 2049
33.2.48 Alpha Blending Control Register 10 (Graphics 1) (GR1_AB10) 2050
33.2.49 Alpha Blending Control Register 11 (Graphics 1) (GR1_AB11) 2051
33.2.50 Background Color Control Register (Graphics 1) (GR1_BASE) 2052
33.2.51 CLUT Table Control Register (Graphics 1) (GR1_CLUT) 2053
33.3 Usage Method 2054
33.3.1 Scaling Setting Example for Displaying Input Video Image 2054
33.3.2 Scaling Setting Example for Graphics Display 2059
33.3.3 Scaling Setting Example for Scaled-up Graphics Display 2062

Section 34 Video Display Controller 4 (4): Image Quality Improver 2067
34.1 Image Quality Improver 2067
34.1.1 Overview of Functions 2067
34.1.2 Register Update Control 2067
34.1.3 Black Stretch 2068
34.1.4 Enhancer 2070

chanhvinh.com

34.1.5 Color Matrix 2078
34.2 Register Description 2082
34.2.1 Register Update Control Register in Image Quality Improver (ADJ_UPDATE) 2084
34.2.2 Black Stretch Register (ADJ_BKSTR_SET) 2085
34.2.3 Enhancer Timing Adjustment Register 1 (ADJ_ENH_TIM1) 2086
34.2.4 Enhancer Timing Adjustment Register 2 (ADJ_ENH_TIM2) 2087
34.2.5 Enhancer Timing Adjustment Register 3 (ADJ_ENH_TIM3) 2088
34.2.6 Enhancer Sharpness Register 1 (ADJ_ENH_SHP1) 2089
34.2.7 Enhancer Sharpness Register 2 (ADJ_ENH_SHP2) 2090
34.2.8 Enhancer Sharpness Register 3 (ADJ_ENH_SHP3) 2091
34.2.9 Enhancer Sharpness Register 4 (ADJ_ENH_SHP4) 2092
34.2.10 Enhancer Sharpness Register 5 (ADJ_ENH_SHP5) 2093
34.2.11 Enhancer Sharpness Register 6 (ADJ_ENH_SHP6) 2094
34.2.12 Enhancer LTI Register 1 (ADJ_ENH_LTI1) 2095
34.2.13 Enhancer LTI Register 2 (ADJ_ENH_LTI2) 2096
34.2.14 Matrix Mode Register in Image Quality Improver (ADJ_MTX_MODE) 2097
34.2.15 Matrix YG Control Register 0 in Image Quality Improver (ADJ_MTX_YG_ADJ0) 2098
34.2.16 Matrix YG Control Register 1 in Image Quality Improver (ADJ_MTX_YG_ADJ1) 2099
34.2.17 Matrix CBB Control Register 0 in Image Quality Improver (ADJ_MTX_CBB_ADJ0) 2100
34.2.18 Matrix CBB Control Register 1 in Image Quality Improver (ADJ_MTX_CBB_ADJ1) 2101
34.2.19 Matrix CRR Control Register 0 in Image Quality Improver (ADJ_MTX_CRR_ADJ0) 2102
34.2.20 Matrix CRR Control Register 1 in Image Quality Improver (ADJ_MTX_CRR_ADJ1) 2103
34.3 Usage Method 2104
34.3.1 Black Stretch Usage Method 2104
34.3.2 LTI Processing of Enhancer 2105
34.3.3 Sharpness Processing of Enhancer 2106
34.3.4 Setting Method for Color Matrix Data Conversion 2107

Section 35 Video Display Controller 4 (5): Image Synthesizer 2109
35.1 Image Synthesizer 2109
35.1.1 Overview of Functions 2109
35.1.2 Graphics Data Read Control 2111
35.1.3 Setting Graphics Display Area 2125

chanhvinh.com

35.1.4 Interrupt Generation at Specified Line 2127
35.1.5 Formats of Frame Buffer Read Signals and Corresponding Alpha Blending Types 2127
35.1.6 Display Selection 2129
35.1.7 Background Color Display Processing 2131
35.1.8 Lower-Layer Graphics Display Processing 2131
35.1.9 Current Graphics Display Processing 2131
35.1.10 Display with Alpha Blending in a Rectangular Area 2132
35.1.11 RGB-Index Chroma-Key Processing 2135
35.1.12 CLUT-Index Chroma-Key Processing 2137
35.1.13 Display with Alpha Blending in One-Pixel Units 2139
35.1.14 Alpha Blending Calculation 2139
35.1.15 CLUT Table 2139
35.2 Register Descriptions 2141
35.2.1 Graphics 2 Register Update Control Register (GR2_UPDATE) 2145
35.2.2 Frame Buffer Read Control Register (Graphics 2) (GR2_FLM_RD) 2146
35.2.3 Frame Buffer Control Register 1 (Graphics 2) (GR2_FLM1) 2147
35.2.4 Frame Buffer Control Register 2 (Graphics 2) (GR2_FLM2) 2148
35.2.5 Frame Buffer Control Register 3 (Graphics 2) (GR2_FLM3) 2149
35.2.6 Frame Buffer Control Register 4 (Graphics 2) (GR2_FLM4) 2150
35.2.7 Frame Buffer Control Register 5 (Graphics 2) (GR2_FLM5) 2151
35.2.8 Frame Buffer Control Register 6 (Graphics 2) (GR2_FLM6) 2152
35.2.9 Alpha Blending Control Register 1 (Graphics 2) (GR2_AB1) 2154
35.2.10 Alpha Blending Control Register 2 (Graphics 2) (GR2_AB2) 2155
35.2.11 Alpha Blending Control Register 3 (Graphics 2) (GR2_AB3) 2156
35.2.12 Alpha Blending Control Register 4 (Graphics 2) (GR2_AB4) 2157
35.2.13 Alpha Blending Control Register 5 (Graphics 2) (GR2_AB5) 2158
35.2.14 Alpha Blending Control Register 6 (Graphics 2) (GR2_AB6) 2159
35.2.15 Alpha Blending Control Register 7 (Graphics 2) (GR2_AB7) 2160
35.2.16 Alpha Blending Control Register 8 (Graphics 2) (GR2_AB8) 2161
35.2.17 Alpha Blending Control Register 9 (Graphics 2) (GR2_AB9) 2162
35.2.18 Alpha Blending Control Register 10 (Graphics 2) (GR2_AB10) 2163
35.2.19 Alpha Blending Control Register 11 (Graphics 2) (GR2_AB11) 2164
35.2.20 Background Color Control Register (Graphics 2) (GR2_BASE) 2165
35.2.21 CLUT Table Control Register (Graphics 2) (GR2_CLUT) 2166
35.2.22 Status Monitor Register (Graphics 2) (GR2_MON) 2167
35.2.23 Graphics 3 Register Update Control Register (GR3_UPDATE) 2168
35.2.24 Frame Buffer Read Control Register (Graphics 3) (GR3_FLM_RD) 2169
35.2.25 Frame Buffer Control Register 1 (Graphics 3) (GR3_FLM1) 2170
35.2.26 Frame Buffer Control Register 2 (Graphics 3) (GR3_FLM2) 2171

chanhvinh.com

35.2.27 Frame Buffer Control Register 3 (Graphics 3) (GR3_FLM3) 2172
35.2.28 Frame Buffer Control Register 4 (Graphics 3) (GR3_FLM4) 2173
35.2.29 Frame Buffer Control Register 5 (Graphics 3) (GR3_FLM5) 2174
35.2.30 Frame Buffer Control Register 6 (Graphics 3) (GR3_FLM6) 2174
35.2.31 Alpha Blending Control Register 1 (Graphics 3) (GR3_AB1) 2176
35.2.32 Alpha Blending Control Register 2 (Graphics 3) (GR3_AB2) 2178
35.2.33 Alpha Blending Control Register 3 (Graphics 3) (GR3_AB3) 2179
35.2.34 Alpha Blending Control Register 4 (Graphics 3) (GR3_AB4) 2180
35.2.35 Alpha Blending Control Register 5 (Graphics 3) (GR3_AB5) 2181
35.2.36 Alpha Blending Control Register 6 (Graphics 3) (GR3_AB6) 2182
35.2.37 Alpha Blending Control Register 7 (Graphics 3) (GR3_AB7) 2183
35.2.38 Alpha Blending Control Register 8 (Graphics 3) (GR3_AB8) 2184
35.2.39 Alpha Blending Control Register 9 (Graphics 3) (GR3_AB9) 2185
35.2.40 Alpha Blending Control Register 10 (Graphics 3) (GR3_AB10) 2186
35.2.41 Alpha Blending Control Register 11 (Graphics 3) (GR3_AB11) 2187
35.2.42 Background Color Control Register (Graphics 3) (GR3_BASE) 2188
35.2.43 CLUT Table and Interrupt Control Register (Graphics 3) (GR3_CLUT_INT) 2189
35.2.44 Status Monitor Register (Graphics 3) (GR3_MON) 2190
35.3 Usage Method 2191
35.3.1 Mute Image 2191
35.3.2 Alpha Blending in Rectangular Area 2191

Section 36 Video Display Controller 4 (6): Output Controller 2193
36.1 Output Controller 2193
36.1.1 Overview of Functions 2193
36.1.2 Register Update Control 2194
36.1.3 Route Selection 2195
36.1.4 Panel Brightness Adjustment 2195
36.1.5 Contrast Adjustment 2196
36.1.6 Gamma Correction 2197
36.1.7 Dither Process 2203
36.1.8 Output Format Conversion 2206
36.1.9 LCD TCON 2214
36.2 Register Descriptions 2230
36.2.1 Register Update Control Register G in Gamma Correction Block (GAM_G_UPDATE) 2237
36.2.2 Function Switch Register in Gamma Correction Block (GAM_SW) 2238
36.2.3 Table Setting Register G1 to G16 in Gamma Correction Block (GAM_G_LUT1 to GAM_G_LUT16) 2239

chanhvinh.com

36.2.4 Area Setting Register G1 in Gamma Correction Block (GAM_G_AREA1) 2242
36.2.5 Area Setting Register G2 in Gamma Correction Block (GAM_G_AREA2) 2243
36.2.6 Area Setting Register G3 in Gamma Correction Block (GAM_G_AREA3) 2244
36.2.7 Area Setting Register G4 in Gamma Correction Block (GAM_G_AREA4) 2245
36.2.8 Area Setting Register G5 in Gamma Correction Block (GAM_G_AREA5) 2246
36.2.9 Area Setting Register G6 in Gamma Correction Block (GAM_G_AREA6) 2247
36.2.10 Area Setting Register G7 in Gamma Correction Block (GAM_G_AREA7) 2248
36.2.11 Area Setting Register G8 in Gamma Correction Block (GAM_G_AREA8) 2249
36.2.12 Register Update Control Register B in Gamma Correction Block (GAM_B_UPDATE) 2250
36.2.13 Table Setting Register B1 to B16 in Gamma Correction Block (GAM_B_LUT1 to GAM_B_LUT16) 2251
36.2.14 Area Setting Register B1 in Gamma Correction Block (GAM_B_AREA1) 2254
36.2.15 Area Setting Register B2 in Gamma Correction Block (GAM_B_AREA2) 2255
36.2.16 Area Setting Register B3 in Gamma Correction Block (GAM_B_AREA3) 2256
36.2.17 Area Setting Register B4 in Gamma Correction Block (GAM_B_AREA4) 2257
36.2.18 Area Setting Register B5 in Gamma Correction Block (GAM_B_AREA5) 2258
36.2.19 Area Setting Register B6 in Gamma Correction Block (GAM_B_AREA6) 2259
36.2.20 Area Setting Register B7 in Gamma Correction Block (GAM_B_AREA7) 2260
36.2.21 Area Setting Register B8 in Gamma Correction Block (GAM_B_AREA8) 2261
36.2.22 Register Update Control Register R in Gamma Correction Block (GAM_R_UPDATE) 2262
36.2.23 Table Setting Register R1 to R16 in Gamma Correction Block (GAM_R_LUT1 to GAM_R_LUT16) 2263

chanhvinh.com

36.2.24 Area Setting Register R1 in Gamma Correction Block (GAM_R_AREA1) 2266
36.2.25 Area Setting Register R2 in Gamma Correction Block (GAM_R_AREA2) 2267
36.2.26 Area Setting Register R3 in Gamma Correction Block (GAM_R_AREA3) 2268
36.2.27 Area Setting Register R4 in Gamma Correction Block (GAM_R_AREA4) 2269
36.2.28 Area Setting Register R5 in Gamma Correction Block (GAM_R_AREA5) 2270
36.2.29 Area Setting Register R6 in Gamma Correction Block (GAM_R_AREA6) 2271
36.2.30 Area Setting Register R7 in Gamma Correction Block (GAM_R_AREA7) 2272
36.2.31 Area Setting Register R8 in Gamma Correction Block (GAM_R_AREA8) 2273
36.2.32 TCON Register Update Control Register (TCON_UPDATE) 2274
36.2.33 TCON Reference Timing Setting Register (TCON_TIM)..... 2275
36.2.34 TCON Vertical Timing Setting Register A1 (TCON_TIM_STVA1)..... 2276
36.2.35 TCON Vertical Timing Setting Register A2 (TCON_TIM_STVA2)..... 2277
36.2.36 TCON Vertical Timing Setting Register B1 (TCON_TIM_STVB1) 2278
36.2.37 TCON Vertical Timing Setting Register B2 (TCON_TIM_STVB2) 2279
36.2.38 TCON Horizontal Timing Setting Register STH1 (TCON_TIM_STH1)..... 2280
36.2.39 TCON Horizontal Timing Setting Register STH2 (TCON_TIM_STH2)..... 2281
36.2.40 TCON Horizontal Timing Setting Register STB1 (TCON_TIM_STB1) 2282
36.2.41 TCON Horizontal Timing Setting Register STB2 (TCON_TIM_STB2) 2283
36.2.42 TCON Horizontal Timing Setting Register CPV1 (TCON_TIM_CPV1) 2284
36.2.43 TCON Horizontal Timing Setting Register CPV2 (TCON_TIM_CPV2) 2285
36.2.44 TCON Horizontal Timing Setting Register POLA1 (TCON_TIM_POLA1) 2286
36.2.45 TCON Horizontal Timing Setting Register POLA2 (TCON_TIM_POLA2) 2287
36.2.46 TCON Horizontal Timing Setting Register POLB1 (TCON_TIM_POLB1)..... 2289
36.2.47 TCON Horizontal Timing Setting Register POLB2 (TCON_TIM_POLB2)..... 2290
36.2.48 TCON Data Enable Polarity Setting Register (TCON_TIM_DE) 2292
36.2.49 Register Update Control Register in Output Controller (OUT_UPDATE) 2293
36.2.50 Output Interface Register (OUT_SET) 2294
36.2.51 Brightness (DC) Correction Register 1 (OUT_BRIGHT1) 2296

chanhvinh.com

36.2.52 Brightness (DC) Correction Register 2 (OUT_BRIGHT2) 2297
36.2.53 Contrast (Gain) Correction Register (OUT_CONTRAST)..... 2298
36.2.54 Panel Dither Register (OUT_PDTHA) 2299
36.2.55 Output Phase Control Register (OUT_CLK_PHASE) 2301
36.3 Usage Methods 2303
36.3.1 Gamma Correction Adjustment Method..... 2303
36.3.2 Dither Usage Method..... 2303
36.3.3 Output Format Adjustment Method..... 2304

Section 37 Video Display Controller 4 (7): System Controller 2307
37.1 System Controller 2307
37.1.1 Overview of Functions..... 2307
37.1.2 Interrupt Control 2307
37.1.3 Panel Clock Control..... 2311
37.1.4 CLUT Table Read Select Signal Status Flag 2314
37.2 Register Descriptions..... 2315
37.2.1 Interrupt Control Register 1 (SYSCNT_INT1)..... 2316
37.2.2 Interrupt Control Register 2 (SYSCNT_INT2)..... 2317
37.2.3 Interrupt Control Register 3 (SYSCNT_INT3)..... 2320
37.2.4 Interrupt Control Register 4 (SYSCNT_INT4)..... 2321
37.2.5 Panel Clock Control Register (SYSCNT_PANEL_CLK) 2323
37.2.6 CLUT Table Read Select Signal Status Register (SYSCNT_CLUT)..... 2324

Section 38 Image Renderer (IMR-LS) 2325

Section 39 Display Out Comparison Unit..... 2327
39.1 Features..... 2327
39.2 Block Diagram..... 2328
39.3 Register Descriptions..... 2329
39.3.1 Control Register (DOCMCR) 2330
39.3.2 Status Register (DOCMSTR) 2331
39.3.3 Status Clear Register (DOCMCLSTR)..... 2332
39.3.4 Interrupt Enable Register (DOCMIENR) 2333
39.3.5 Operation Parameter Setting Register (DOCMPMR)..... 2334
39.3.6 Expected CRC Code Register (DOCMECRCR) 2336
39.3.7 Calculated CRC Code Value Register (DOCMCCRCR) 2336
39.3.8 Horizontal Start Position Setting Register (DOCMSPXR)..... 2337
39.3.9 Vertical Start Position Setting Register (DOCMSPYR)..... 2338
39.3.10 Horizontal Size Setting Register (DOCMSZXR) 2339
39.3.11 Vertical Size Setting Register (DOCMSZYR) 2340

chanhvinh.com

39.3.12 CRC Code Initialization Register (DOCMCRCIR) 2341
39.4 Operation 2342
39.4.1 Overview of Operations 2342
39.4.2 System Configuration 2342
39.4.3 CRC Calculation Method 2343
39.4.4 Graphics Data Selection for CRC Code Generation 2343
39.4.5 Pixel Format 2344
39.4.6 Rectangular Area Settings 2345
39.4.7 CRC Calculation Time Period and Comparison Timing 2347
39.4.8 Register Update Timing 2348
39.4.9 Operation Flow 2349
39.5 Interrupt 2351
39.6 Usage Note 2351
39.6.1 Expected CRC Value 2351
39.6.2 Expansion Control Functionality 2351

Section 40 OpenVG™-Compliant Renesas Graphics Processor 2353
40.1 Specification 2353
40.2 Usage Note 2353

Section 41 JPEG Codec Unit 2355
41.1 Features 2355
41.2 Register Descriptions 2357
41.2.1 JPEG Code Mode Register (JCMOD) 2359
41.2.2 JPEG Code Command Register (JCCMD) 2360
41.2.3 JPEG Code Quantization Table Number Register (JCQTN) 2362
41.2.4 JPEG Code Huffman Table Number Register (JCHTN) 2363
41.2.5 JPEG Code DRI Upper Register (JCDRIU) 2364
41.2.6 JPEG Code DRI Lower Register (JCDRID) 2365
41.2.7 JPEG Code Vertical Size Upper Register (JCVSZU) 2366
41.2.8 JPEG Code Vertical Size Lower Register (JCVSZD) 2367
41.2.9 JPEG Code Horizontal Size Upper Register (JCHSZU) 2368
41.2.10 JPEG Coded Horizontal Size Lower Register (JCHSZD) 2369
41.2.11 JPEG Code Data Count Upper Register (JCDTCU) 2370
41.2.12 JPEG Code Data Count Middle Register (JCDTCM) 2371
41.2.13 JPEG Code Data Count Lower Register (JCDTCD) 2372
41.2.14 JPEG Interrupt Enable Register 0 (JINTE0) 2373
41.2.15 JPEG Interrupt Status Register 0 (JINTS0) 2375
41.2.16 JPEG Code Decode Error Register (JCDERR) 2376
41.2.17 JPEG Code Reset Register (JCRST) 2377

chanhvinh.com

41.2.18 JPEG Interface Compression Control Register (JIFECNT) 2378
41.2.19 JPEG Interface Compression Source Address Register (JIFESA) 2381
41.2.20 JPEG Interface Compression Line Offset Register (JIFESOFST) 2382
41.2.21 JPEG Interface Compression Destination Address Register (JIFEDA) 2383
41.2.22 JPEG Interface Compression Source Line Count Register (JIFESLC) 2384
41.2.23 JPEG Interface Decompression Control Register (JIFDCNT) 2385
41.2.24 JPEG Interface Decompression Source Address Register (JIFDSA) 2390
41.2.25 JPEG Interface Decompression Line Offset Register (JIFDDOFST) 2391
41.2.26 JPEG Interface Decompression Destination Address Register (JIFDDA) 2392
41.2.27 JPEG Interface Decompression Source Data Count Register (JIFDSDC) 2393
41.2.28 JPEG Interface Decompression Destination Line Count Register (JIFDDLC) 2394
41.2.29 JPEG Interface Decompression α Set Register (JIFDADT) 2395
41.2.30 JPEG Interrupt Enable Register 1 (JINTE1) 2396
41.2.31 JPEG Interrupt Status Register 1 (JINTS1) 2398
41.3 Operation 2400
41.3.1 Compression 2400
41.3.2 Decompression 2410
41.3.3 Output Pixel Format in Decompression 2419
41.3.4 Storing Image Data 2424
41.4 Interrupts 2425
41.4.1 Compression/Decompression Process Interrupt Request (JEDI) 2425
41.4.2 Data Transfer Interrupt Request (JDTI) 2426
41.5 Bus Reset Processing 2428
41.6 Usage Notes 2429
41.6.1 Pixel Format YCbCr 2429

Section 42 Sampling Rate Converter 2431
42.1 Features 2431
42.2 Register Descriptions 2433
42.2.1 Input Data Register (SRCID) 2434
42.2.2 Output Data Register (SRCOD) 2435
42.2.3 Input Data Control Register (SRCIDCTRL) 2436
42.2.4 Output Data Control Register (SRCODCTRL) 2438
42.2.5 Control Register (SRCCTRL) 2440
42.2.6 Status Register (SRCSTAT) 2446
42.3 Operation 2451
42.3.1 Initial Setting 2451
42.3.2 Data Input 2452
42.3.3 Data Output 2454

chanhvinh.com

42.4 Interrupts 2456
42.5 Usage Notes 2457
42.5.1 Notes on Accessing Registers 2457
42.5.2 Notes on Flush Processing 2457

Section 43 Sound Generator 2459
43.1 Features 2459
43.2 Input/Output Pins 2460
43.3 Register Descriptions 2460
43.3.1 Sound Generator Control Register 1 (SGCR1) 2463
43.3.2 Sound Generator Control Status Register (SGCSR) 2465
43.3.3 Sound Generator Control Register 2 (SGCR2) 2466
43.3.4 Sound Generator Loudness Register (SGLR) 2467
43.3.5 Sound Generator Tone Frequency Register (SGTFR) 2467
43.3.6 Sound Generator Reference Frequency Register (SGSFR) 2468
43.4 Operation 2469
43.4.1 Base Operation 2469
43.4.2 Tone Frequency Setting 2473
43.4.3 Auto Attenuator Function 2474
43.4.4 Output Waveform 2475
43.5 Interrupt Source 2475
43.6 Usage Note 2476
43.6.1 Module Stop Mode Settings 2476

Section 44 SD Host Interface 2477

Section 45 MMC Host Interface 2479
45.1 Features 2479
45.2 Input/Output Pins 2480
45.3 Register Descriptions 2481
45.3.1 Command Setting Register (CE_CMD_SET) 2482
45.3.2 Argument Register (CE_ARG) 2486
45.3.3 Argument Register for Automatically-Issued CMD12 (CE_ARG_CMD12) 2486
45.3.4 Command Control Register (CE_CMD_CTRL) 2487
45.3.5 Transfer Block Setting Register (CE_BLOCK_SET) 2488
45.3.6 Clock Control Register (CE_CLK_CTRL) 2489
45.3.7 Buffer Access Configuration Register (CE_BUF_ACC) 2491
45.3.8 Response Registers 3 to 0 (CE_RESP3 to CE_RESP0) 2492

chanhvinh.com

45.3.9 Response Register for Automatically-Issued CMD12 (CE_RESP_CMD12) ... 2494
45.3.10 Data Register (CE_DATA) ... 2494
45.3.11 Interrupt Flag Register (CE_INT) ... 2495
45.3.12 Interrupt Enable Register (CE_INT_EN) ... 2502
45.3.13 Status Register 1 (CE_HOST _STS1) ... 2505
45.3.14 Status Register 2 (CE_HOST _STS2) ... 2506
45.3.15 DMA Mode Setting Register (CE_DMA_MODE) ... 2509
45.3.16 Card Detection/Port Control Register (CE_DETECT) ... 2510
45.3.17 Special Mode Setting Register (CE_ADD_MODE) ... 2512
45.3.18 Version Register (CE_VERSION) ... 2513
45.4 Interrupt Requests ... 2514
45.5 DMA Specifications ... 2515
45.5.1 DMA for Buffer Writing ... 2515
45.5.2 DMA for Buffer Reading ... 2515
45.6 Operation ... 2516
45.6.1 Command/Response Formats ... 2516
45.6.2 Data Block Format ... 2517
45.6.3 Buffer Structure and Buffer Accesses ... 2518
45.6.4 Automatic CMD12 Issuance ... 2520
45.6.5 Operation in the Case of Error/Timeout ... 2521
45.7 Examples of Setting ... 2522
45.7.1 Legends ... 2522
45.7.2 Command Transmission ... 2523
45.7.3 Command Transmission → Response Reception ... 2524
45.7.4 Command Transmission → Response Reception (with Response Busy) ... 2525
45.7.5 Single-Block Read ... 2527
45.7.6 Multi-Block Read ... 2528
45.7.7 Multi-Block Read (with Automatic CMD12 Issuance) ... 2529
45.7.8 Single-Block Write ... 2530
45.7.9 Multi-Block Write ... 2531
45.7.10 Multi-Block Write (with Automatic CMD12 Issuance) ... 2532
45.7.11 Forcible Termination ... 2533
45.7.12 Setting Values of CE_CMD_SET ... 2534
45.8 Usage Note ... 2536
45.8.1 Card Detection ... 2536

Section 46 Motor Control PWM Timer ... 2537
46.1 Features ... 2537
46.2 Input/Output Pins ... 2539

chanhvinh.com

46.3 Register Descriptions 2540
46.3.1 PWM Control Register_n (PWCR_n) (n = 1, 2) 2541
46.3.2 PWM Polarity Register_n (PWPR_n) (n = 1, 2) 2543
46.3.3 PWM Counter_n (PWCNT_n) (n = 1, 2) 2543
46.3.4 PWM Cycle Register_n (PWCYR_n) (n = 1, 2) 2544
46.3.5 PWM Duty Registers_nA, nC, nE, nG (PWDTR_nA, PWDTR_nC, PWDTR_nE, PWDTR_nG) (n = 1, 2) 2545
46.3.6 PWM Buffer Registers_nA, nC, nE, nG (PWBFR_nA, PWBFR_nC, PWBFR_nE, PWBFR_nG) (n = 1, 2) 2548
46.3.7 PWM Buffer Transfer Control Register (PWBTCR) 2549
46.4 Bus Master Interface 2550
46.4.1 16-Bit Data Registers 2550
46.4.2 8-Bit Data Registers 2550
46.5 Operation 2551
46.5.1 PWM Operation 2551
46.5.2 Buffer Transfer Control 2552
46.6 Usage Note 2553
46.6.1 Conflict between Buffer Register Write and Compare Match 2553

Section 47 On-Chip RAM 2555
47.1 Features 2555
47.2 Usage Notes 2558
47.2.1 Page Conflict 2558
47.2.2 RAME and RAMWE Bits 2558
47.2.3 Data Retention 2559

Section 48 General Purpose I/O Ports 2561
48.1 Features 2561
48.2 Register Descriptions 2571
48.2.1 Port A I/O Register 0 (PAIOR0) 2574
48.2.2 Port A Data Register 0 (PADR0) 2574
48.2.3 Port A Port Register 0 (PAPR0) 2575
48.2.4 Port B Control Registers 0 to 5 (PBCR0 to PBCR5) 2576
48.2.5 Port B I/O Registers 0, 1 (PBIOR0, PBIOR1) 2588
48.2.6 Port B Data Registers 0, 1 (PBDR0, PBDR1) 2589
48.2.7 Port B Port Registers 0, 1 (PBPR0, PBPR1) 2591
48.2.8 Port C Control Registers 0 to 2 (PCCR0 to PCCR2) 2593
48.2.9 Port C I/O Register 0 (PCIOR0) 2596
48.2.10 Port C Data Register 0 (PCDR0) 2597
48.2.11 Port C Port Register 0 (PCPR0) 2598

chanhvinh.com

48.2.12 Port D Control Register 0 to 3 (PDCR0 to PDCR3) 2599
48.2.13 Port D I/O Register 0 (PDIOR0) 2605
48.2.14 Port D Port Register 0 (PDDR0) 2606
48.2.15 Port D Port Register 0 (PDPR0) 2608
48.2.16 Port E Control Registers 0, 1 (PECR0, PECR1) 2609
48.2.17 Port E I/O Register 0 (PEIOR0) 2611
48.2.18 Port E Data Register 0 (PEDR0) 2612
48.2.19 Port E Port Register 0 (PEPR0) 2613
48.2.20 Port F Control Registers 0 to 6 (PFCR0 to PFCR6) 2614
48.2.21 Port F I/O Registers 0, 1 (PFIOR0, PFIOR1) 2623
48.2.22 Port F Data Registers 0, 1 (PFDR0, PFDR1) 2624
48.2.23 Port F Port Registers 0, 1 (PFPR0, PFPR1) 2626
48.2.24 Port G Control Registers 0 to 6 (PGCR0 to PGCR6) 2628
48.2.25 Port G I/O Registers 0, 1 (PGIOR0, PGIOR1) 2640
48.2.26 Port G Data Registers 0, 1 (PGDR0, PGDR1) 2641
48.2.27 Port G Port Registers 0, 1 (PGPR0, PGPR1) 2643
48.2.28 Port H Control Registers 0, 1 (PHCR0, PHCR1) 2646
48.2.29 Port H Port Register 0 (PHPR0) 2648
48.2.30 Port J Control Registers 0 to 7
(PJCR0 to PJCR7: Available Only in the SH7269 Group) 2649
48.2.31 Port J I/O registers 0, 1
(PJIOR0, PJIOR1: Available Only in the SH7269 Group) 2661
48.2.32 Port J Data Registers 0, 1
(PJDR0, PJDR1: Available Only in the SH7269 Group) 2662
48.2.33 Port J Port Registers 0, 1
(PJPR0, PJPR1: Available Only in the SH7269 Group) 2665
48.2.34 Serial Sound Interface Noise Canceler Control Register (SNCR) 2668

Section 49 Power-Down Modes 2671
49.1 Features 2671
49.1.1 Power-Down Modes 2671
49.2 Register Descriptions 2674
49.2.1 Standby Control Register 1 (STBCR1) 2675
49.2.2 Standby Control Register 2 (STBCR2) 2676
49.2.3 Standby Control Register 3 (STBCR3) 2677
49.2.4 Standby Control Register 4 (STBCR4) 2679
49.2.5 Standby Control Register 5 (STBCR5) 2682
49.2.6 Standby Control Register 6 (STBCR6) 2684
49.2.7 Standby Control Register 7 (STBCR7) 2686
49.2.8 Standby Control Register 8 (STBCR8) 2688

chanhvinh.com

49.2.9 Standby Control Register 9 (STBCR9) 2690
49.2.10 Standby Control Register 10 (STBCR10) 2692
49.2.11 Software Reset Control Register 1 (SWRSTCR1) 2694
49.2.12 Software Reset Control Register 2 (SWRSTCR2) 2696
49.2.13 System Control Register 1 (SYSCR1) 2697
49.2.14 System Control Register 2 (SYSCR2) 2698
49.2.15 System Control Register 3 (SYSCR3) 2699
49.2.16 System Control Register 4 (SYSCR4) 2701
49.2.17 System Control Register 5 (SYSCR5) 2702
49.2.18 On-Chip Data-Retention RAM Area Setting Register (RRAMKP) 2704
49.2.19 Deep Standby Control Register (DSCTR) 2705
49.2.20 Deep Standby Cancel Source Select Register (DSSSR) 2707
49.2.21 Deep Standby Cancel Edge Select Register (DSESR) 2710
49.2.22 Deep Standby Cancel Source Flag Register (DSFR) 2712
49.2.23 XTAL Crystal Oscillator Gain Control Register (XTALCTR) 2715
49.3 Operation 2716
49.3.1 Sleep Mode 2716
49.3.2 Software Standby Mode 2717
49.3.3 Software Standby Mode Application Example 2720
49.3.4 Deep Standby Mode 2721
49.3.5 Module Standby Function 2727
49.3.6 Adjustment of XTAL Crystal Oscillator Gain 2727
49.4 Usage Notes 2728
49.4.1 Usage Notes on Setting Registers 2728
49.4.2 Usage Notes when the Realtime Clock is not Used 2728

Section 50 User Debugging Interface 2729
50.1 Features 2729
50.2 Input/Output Pins 2730
50.3 Description of the Boundary Scan TAP Controller 2731
50.3.1 Bypass Register (BSBPR) 2731
50.3.2 Instruction Register (BSIR) 2731
50.3.3 Boundary Scan Register (SDBSR) 2732
50.3.4 ID Register (BSID) 2738
50.4 Description of the Emulation TAP Controller 2739
50.4.1 Bypass Register (SDBPR) 2739
50.4.2 Instruction Register (SDIR) 2739
50.5 Operation 2741
50.5.1 TAP Controller 2741
50.5.2 Reset Configuration 2742

chanhvinh.com

50.5.3 TDO Output Timing 2742
50.5.4 User Debugging Interface Reset 2743
50.5.5 User Debugging Interface Interrupt 2743
50.6 Boundary Scan 2744
50.6.1 Supported Instructions 2744
50.6.2 Notes 2745
50.7 Usage Notes 2746

Section 51 List of Registers 2747
51.1 Register Addresses
(by functional module, in order of the corresponding section numbers) 2749
51.2 Register Bits 2806
51.3 Register States in Each Operating Mode 2952

Section 52 Electrical Characteristics 2957
52.1 Absolute Maximum Ratings 2957
52.2 Power-On/Power-Off Sequence 2958
52.3 DC Characteristics 2959
52.4 AC Characteristics 2970
52.4.1 Clock Timing 2970
52.4.2 Control Signal Timing 2975
52.4.3 Bus Timing 2977
52.4.4 UBC Timing 3008
52.4.5 Direct Memory Access Controller Timing 3009
52.4.6 Multi-Function Timer Pulse Unit 2 Timing 3010
52.4.7 Watchdog Timer Timing 3011
52.4.8 Serial Communication Interface with FIFO Timing 3012
52.4.9 Renesas Serial Peripheral Interface Timing 3013
52.4.10 Renesas Quad Serial Peripheral Interface Timing 3017
52.4.11 SPI Multi I/O Bus Controller Timing 3019
52.4.12 I^2C Bus Interface 3 Timing 3022
52.4.13 Serial Sound Interface Timing 3024
52.4.14 Serial I/O with FIFO Timing 3026
52.4.15 A/D Converter Timing 3028
52.4.16 NAND Type Flash Memory Controller Timing 3029
52.4.17 USB 2.0 Host/Function Module Timing 3034
52.4.18 Video Display Controller 4 Timing 3037
52.4.19 SD Host Interface Timing 3040
52.4.20 MMC Host Interface Timing 3041
52.4.21 General Purpose I/O Ports Timing 3042

chanhvinh.com

52.4.22 User Debugging Interface Timing 3043
52.4.23 AC Characteristics Measurement Conditions 3045
52.5 A/D Converter Characteristics 3046
52.6 Video Characteristics of A/D Converter for the Input of Video Signals 3047

Section 53 States and Handling of Pins 3049
53.1 Pin States 3049
53.2 Treatment of Unused Pins 3064
53.3 Handling of Pins in Deep Standby Mode 3066
53.4 Recommended Combination of Bypass Capacitor 3068

Appendix 3071
A. Package Dimensions 3071

Index 3075

chanhvinh.com
chanhvinh.com
chanhvinh.com
chanhvinh.com

chanhvinh.com

Section 1 Overview

1.1 SH7268/7269 Features

This LSI is a single-chip RISC (reduced instruction set computer) microcontroller that includes a Renesas-original RISC CPU as its core, and the peripheral functions required to configure a system.

The CPU in this LSI is an SH-2A CPU, which provides upward compatibility for SH-1, SH-2, and SH-2E CPUs at object code level. It has a RISC-type instruction set, superscalar architecture, and Harvard architecture, for superior rates of instruction execution. In addition, an independent 32-bit internal-bus architecture enhances data processing power. This CPU brings the user the ability to set up high-performance systems with strong functionality at less expense than was achievable with previous microcontrollers, and is even able to handle realtime control applications requiring high-speed characteristics.

This LSI has a floating-point unit and cache. In addition, this LSI includes on-chip peripheral functions necessary for system configuration, such as a 64-Kbyte RAM for high-speed operation, a 2.5-Mbyte large-capacity RAM (128-Kbytes are shared by the data-retention RAM), data-retention RAM, multi-function timer pulse unit 2, compare match timer, realtime clock, serial communication interface with FIFO, I^2C bus interface 3, serial sound interface, clocked synchronous serial I/O with FIFO*[2], controller area network*[2], IEBus™*[1] controller, Renesas SPDIF interface, Renesas serial peripheral interface, Renesas quad serial peripheral interface, SPI multi I/O bus controller, CD-ROM decoder, A/D converter, NAND flash memory controller, USB 2.0 host/function, digital video decoder, video display controller 4, image renderer, display out comparison unit, OpenVG™*[3]-compliant Renesas graphics processor, JPEG codec unit, sampling rate converter, sound generator, SD host interface, MMC host interface, motor control PWM timer, interrupt controller modules, and general I/O ports.

This LSI also provides an external memory access support function to enable direct connection to various memory devices or peripheral LSIs. These on-chip functions significantly reduce costs of designing and manufacturing application systems.

The features of this LSI are listed in table 1.1.

Notes: 1. IEBus (Inter Equipment Bus) is a trademark of Renesas Electronics Corporation.
2. This module is included or not depending on the product code.
3. OpenVG is a trademark of Khronos Group Inc.

chanhvinh.com

Table 1.1 SH7268/7269 Features

Items	Specification
CPU	• Renesas original SuperH architecture • Compatible with SH-1, SH-2, and SH-2E at object code level • 32-bit internal data bus • Support of an abundant register-set — Sixteen 32-bit general registers — Four 32-bit control registers — Four 32-bit system registers — Register bank for high-speed response to interrupts • RISC-type instruction set (upward compatible with SH series) — Instruction length: 16-bit fixed-length basic instructions for improved code efficiency and 32-bit instructions for high performance and usability — Load/store architecture — Delayed branch instructions — Instruction set based on C language • Superscalar architecture to execute two instructions at one time including a floating-point unit • Instruction execution time: Up to two instructions/cycle • Address space: 4 Gbytes • Internal multiplier • Five-stage pipeline • Harvard architecture

chanhvinh.com

Items	Specification
Floating-point unit	• Floating-point co-processor included • Supports single-precision (32-bit) and double-precision (64-bit) • Supports data type and exceptions that conforms to IEEE754 standard • Two rounding modes: Round to nearest and round to zero • Two denormalization modes: Flush to zero • Floating-point registers — Sixteen 32-bit floating-point registers (single-precision × 16 words or double-precision × 8 words) — Two 32-bit floating-point system registers • Supports FMAC (multiplication and accumulation) instructions • Supports FDIV (division) and FSQRT (square root) instructions • Supports FLDI0/FLDI1 (load constant 0/1) instructions • Instruction execution time — Latency (FMAC/FADD/FSUB/FMUL): Three cycles (single-precision), eight cycles (double-precision) — Pitch (FMAC/FADD/FSUB/FMUL): One cycle (single-precision), six cycles (double-precision) Note: FMAC only supports single-precision • Five-stage pipeline
Cache memory	• Instruction cache: 8 Kbytes • Operand cache: 8 Kbytes • 128-entry/way, 4-way set associative, 16-byte block length configuration each for the instruction cache and operand cache • Write-back, write-through, LRU replacement algorithm • Way lock function available (only for operand cache); ways 2 and 3 can be locked
Interrupt controller	• Seventeen external interrupt pins (NMI, IRQ7 to IRQ0, and PINT7 to PINT0) • On-chip peripheral interrupts: Priority level set for each module • 16 priority levels available • Register bank enabling fast register saving and restoring in interrupt processing

chanhvinh.com

Items	Specification
Bus state controller	• Address space divided into six areas (0 to 5), each a maximum of 64 Mbytes • The following features settable for each area independently — Bus size (8, 16, or 32 bits): Available sizes depend on the area. — Number of access wait cycles (different wait cycles can be specified for read and write access cycles in some areas) — Idle wait cycle insertion (between the same area access cycles or different area access cycles) — Specifying the memory to be connected to each area enables direct connection to SRAM, SRAM with byte selection, SDRAM, and burst ROM (clocked synchronous or asynchronous). The address/data multiplexed I/O (MPX) interface is also available. — PCMCIA interface — Outputs a chip select signal ($\overline{CS0}$ to $\overline{CS5}$) according to the target area ($\overline{CS}$ assert or negate timing can be selected by software) • SDRAM refresh Auto refresh or self refresh mode selectable • SDRAM burst access
Direct memory access controller	• Sixteen channels; external requests are available for one of them. • Can be activated by on-chip peripheral modules • Burst mode and cycle steal mode • Intermittent mode available (16 and 64 cycles supported) • Transfer information can be automatically reloaded
Clock pulse generator	• Clock mode: Input clock can be selected from external input (EXTAL) or crystal resonator • Input clock can be multiplied by 20 (max.) by the internal PLL circuit • Peak values of EMI noise can be reduced by the on-chip SSCG circuit. • Four types of clocks generated: — CPU clock (Iϕ): Maximum 266.67 MHz — Internal bus clock (Bϕ): Maximum 133.33 MHz — Peripheral clock 1 (P1ϕ): Maximum 66.67 MHz — Peripheral clock 0 (P0ϕ): Maximum 33.33 MHz
Watchdog timer	• On-chip one-channel watchdog timer • A counter overflow can reset the LSI

chanhvinh.com

Items	Specification
Power-down modes	• Four power-down modes provided to reduce the power consumption in this LSI — Sleep mode — Software standby mode — Deep standby mode — Module standby mode
Multi-function timer pulse unit 2	• Maximum 16 lines of pulse inputs/outputs based on five channels of 16-bit timers • 18 output compare and input capture registers • Input capture function • Pulse output modes Toggle, PWM, complementary PWM, and reset-synchronized PWM modes • Synchronization of multiple counters • Complementary PWM output mode — Non-overlapping waveforms output for 3-phase inverter control — Automatic dead time setting — 0% to 100% PWM duty value specifiable — A/D converter start request delaying function — Interrupt skipping at crest or trough • Reset-synchronized PWM mode Three-phase PWM waveforms in positive and negative phases can be output with a required duty value • Phase counting mode Two-phase encoder pulse counting available
Compare match timer	• Two-channel 16-bit counters • Four types of clock can be selected (P0ϕ/8, P0ϕ/32, P0ϕ/128, and P0ϕ/512) • DMA transfer request or interrupt request can be issued when a compare match occurs
Realtime clock	• Internal clock, calendar function, alarm function • Interrupts can be generated at intervals of 1/64 s by the 32.768-kHz on-chip crystal oscillator

chanhvinh.com

Items	Specification
Serial communication interface with FIFO	• Eight channels • Clocked synchronous or asynchronous mode selectable • Simultaneous transmission and reception (full-duplex communication) supported • Dedicated baud rate generator • Separate 16-byte FIFO registers for transmission and reception • Modem control function (SH7268: channel 1, SH7269: channels 1, 5, and 7 in asynchronous mode)
Renesas serial peripheral interface	• Two channels • SPI operation • Master mode and slave mode selectable • Programmable bit length, clock polarity, and clock phase can be selected. • Consecutive transfers • MSB first/LSB first selectable • Maximum transfer rate: 33.33 Mbps
Renesas quad serial peripheral interface	• Two channels • Connectable to serial flash memory with multiple I/O functionality (single/dual/quad) • Programmable bit length, clock polarity, and clock phase can be selected. • Consecutive transfers • MSB first/LSB first selectable • Maximum transfer rate: 266.67 Mbps
SPI multi I/O bus controller	• Up to two serial flash memories with multiple I/O bus sizes (single/dual/quad) can be connected. • External address space read mode (built-in read cache) • SPI operating mode • Clock polarity and clock phase can be selected. • Maximum transfer rate: 533.33 Mbps (with two serial flash memories connected)
I^2C bus interface 3	• SH7268: two channels, SH7269: four channels • Master mode and slave mode supported

chanhvinh.com

Items	Specification
Serial sound interface	• SH7268: four-channel, SH7269: six-channel bidirectional serial transfer • Duplex communication (channel 0) • Support of various serial audio formats • Support of master and slave functions • Generation of programmable word clock and bit clock • Multi-channel formats • Support of 8, 16, 18, 20, 22, 24, and 32-bit data formats • Support of eight-stage FIFO for transmission and reception • Support of TDM mode • Support of WS continue mode in which the SSIWS signal is not stopped.
Serial I/O with FIFO Note: This module is not included in the SH7268 Group.	• Support of 16-stage 32-bits FIFOs independently for transmission and reception • 8-bit monaural/16-bit monaural/16-bit stereo audio input and output • Connectable to linear, audio, or A-Law or μ-Law CODEC chip • Support of master and slave functions
Controller area network Note: This module is included or not depending on the product code.	• Three channels • TTCAN level 1 supports for all channels • BOSCH 2.0B active compatible • Buffer size: transmit/receive × 31, receive only × 1 • Two or more controller area network channels can be assigned to one bus to increase number of buffers with a granularity of 32 channels • 31 Mailboxes for transmission or reception

chanhvinh.com

Items	Specification
IEBus™ controller	• IEBus protocol control (layer 2) supported — Half-duplex asynchronous communications — Multi-master system — Broadcast communications function — Selectable mode (three types) with different transfer speeds • On-chip buffers (dual port RAM) for data transmission and reception that enable up to 128 bytes of consecutive transmission/reception (maximum number of transfer bytes in mode 2) • Operating frequency — 1/2 divided clocks of 12 MHz or 12.58 MHz. — 1/3 divided clocks of 18 MHz or 18.87 MHz. — 1/4 divided clocks of 24 MHz or 25.16 MHz. — 1/5 divided clocks of 30 MHz or 31.45 MHz. — 1/6 divided clocks of 36 MHz or 37.74 MHz. — 1/7 divided clocks of 42 MHz or 44.03 MHz. — 1/8 divided clock of 48 MHz.
Renesas SPDIF interface	• Support of IEC60958 standard (stereo and consumer use modes only) • Sampling frequencies of 32 kHz, 44.1 kHz, and 48 kHz • Audio word sizes of 16 to 24 bits per sample • Biphase mark encoding • Double buffered data • Parity encoded serial data • Simultaneous transmit and receive • Receiver autodetects IEC 61937 compressed mode data

chanhvinh.com

Items	Specification
CD-ROM decoder	• Support of five formats: Mode 0, mode 1, mode 2, mode 2 form 1, and mode 2 form 2 • Sync codes detection and protection (Protection: When a sync code is not detected, it is automatically inserted.) • Descrambling • ECC correction — P, Q, PQ, and QP correction — PQ or QP correction can be repeated up to three times • EDC check Performed before and after ECC • Mode and form are automatically detected • Link sectors are automatically detected • Buffering data control Buffering CD-ROM data including Sync code is transferred in specified format, after the data is descrambled, corrected by ECC, and checked by EDC.
NAND flash memory controller	• Direct-connected memory interface with NAND-type flash memory • Read/write in sectors • Two types of transfer modes: Command access mode and sector access mode (512-byte data + 16-byte management code) • Interrupt request and DMA transfer request • Supports flash memory requiring 5-byte addresses (2 Gbits and more)
USB 2.0 host/function module	• Conforms to the Universal Serial Bus Specification Revision 2.0 • 480-Mbps, 12-Mbps, and 1.5-Mbps transfer rates provided (host mode) • 480-Mbps and 12-Mbps transfer rates provided (function mode) • On-chip 8-Kbyte RAM as communication buffers

chanhvinh.com

Items	Specification
Digital video decoder	• Video input Composite video input (CVBS) • A/D converter for video signal input VIN1 and VIN2 pin input selection Sync tip clamp Programmable gain amplifier (PGA) (1.835 to 8.023 dB) 10-bit precision pipelined A/D converter • Sync separation Noise reduction LPF, auto level control sync slicer, horizontal auto frequency control (AFC), vertical count-down, interlace detection, auto gain control (AGC)/peak limiter control • Y/C separation NTSC 2D, PAL 2D, SECAM 1D supported. • Chroma-key decoding NTSC, PAL, SECAM supported. Color killer, auto color control (ACC), TINT correction, R-Y axis correction • Digital clamp Pedestal clamp (Y), center clamp (Cb/Cr), noise detection • Adjustment of output gain Contrast: 0 to approximately 2 times Color (Cb/Cr independently): 0 to approximately 2 times
Video display controller 4	• Video input interface: One channel can be selected from the followings. BT601, BT656 format (NTSC/PAL) input: Input clock: 27 MHz/54 MHz Digital pin input: YCbCr444, RGB888, RGB666, RGB565 Digital pin input size: Maximum input video image size to be set*: 1024 pixels × 1024 lines (horizontal × vertical) Note: * Depends on the AC characteristics of the connected device. Examples of input video image size : SVGA (800 × 600), WVGA (800 × 480), VGA (640 × 480), WQVGA (480 × 240), QVGA (320 × 240, 240 × 320) Composite video (CVBS) signal input decoded by the digital video decoder

chanhvinh.com

Items	Specification
Video display controller 4	• Input video control Horizontal noise reduction (NR), brightness adjustment and contrast adjustment using matrix operation • Scaling control Vertical and horizontal scaling up or down of input video possible at a desired ratio (scaling up of graphics also possible) Scaling up ratio: 1 to 8; scaling down ratio: 1/8 to 1 Interpolation: Hold or linear selectable 2D IP conversion: 2D IP conversion through separately setting the initial phases for the top and bottom fields • Video recording Output pixel format: YCbCr422, RGB888, RGB565 Output field rate: 1/1, 1/2, 1/4, 1/8 Rotation: Horizontal mirroring and 90/180/270° rotation for YCbCr422 and RGB565 (exclusive control for rotation and image renderer) Maximum video image size to be stored: ×1 size of input video image • Output video control Black stretch: Black area stretched according to Y signal state Enhancer capability: LTI (transient improvement) and sharpness (contour emphasis) for Y signal • Three graphics layers (one of them also for input video) Available input pixel formats 1 bit/pixel: CLUT1 4 bits/pixel: CLUT4 8 bits/pixel: CLUT8 16 bits/pixel: YCbCr422, RGB565, ARGB1555, ARGB4444 32 bits/pixel: ARGB8888, RGB888 • Superimposition Alpha blending in a rectangular area: Input video, layer 1, and layer 2 blended according to the transparency percentage α (fade-in and fade-out function available) Chroma key function: Mixing based on transparency percentage α using the specified RGB and CLUT value Pixel-base alpha blending: Alpha blending for each pixel based on transparency percentage α

chanhvinh.com

Items	Specification
Video display controller 4	• Panel output control Panel output correction: Brightness adjustment and contrast adjustment, gamma correction, panel dithering TCON: Various timing output for LCD panel driving provided by a total of seven vertical and horizontal panel driver signals Panel output pixel format: RGB888, RGB666, RGB565, serial RGB Output video image size: Maximum output video image size to be set*: 1999 pixels × 2035 lines (horizontal × vertical) Note: * Depends on the AC characteristics of the display panel. Examples of output video image size: SVGA (800 × 600), WVGA (800 × 480), VGA (640 × 480), WQVGA (480 × 240), QVGA (320 × 240, 240 × 320) • Frame buffer Large-capacity on-chip RAM and external SDRAM can be used. Note: When using external SDRAM, display may not be possible if the bus bandwidth is insufficient. Therefore, it is recommended that the frame buffer be allocated in the large-capacity on-chip RAM.
Image renderer	• Refers to the video captured data as two-dimensional texture data and draws a shape by performing texture mapping for an arbitrary shape divided into triangular objects. • Display list system • Drawing functions Texture mapping, bilinear filtering, automatic coordinate generation (and relative coordinate input) • Instruction system Draw instruction: TRI for drawing a triangle Control instructions: TRAP, INT, NOP, SYNCM, SYNCW, WTL, and WTS • Drawing space Destination coordinates: $0 \le X \le 1,023$, $0 \le Y \le 1,023$ Source coordinates: $0 \le u \le 1,023$, $0 \le v \le 1,023$

chanhvinh.com

Items	Specification
Display out comparison unit	• Calculates the CRC code of an arbitrary graphics plane and compares it with the pre-calculated CRC code. • Specifies the rectangular area in an arbitrary graphics plane selected from three graphics planes and one plane of the graphics data obtained after α blending of the video display controller 4. • Pixel Format 32 bits/pixel: ARGB8888/RGB888/RGB666 16 bits/pixel: RGB565
OpenVG™-compliant Renesas graphics processor	• OpenVG™, which is an open 2D vector graphics API, can be processed. • Processes can be accelerated in OpenVG™ stage 2 to stage 8 using the dedicated hardware and programmable shader. Note: When using the OpenVG™ graphics processor and JPEG codec unit at the same time, it is necessary to implement exclusive bus access control in software to ensure that they do not access the bus simultaneously. Operation cannot be guaranteed if the OpenVG™ graphics processor and JPEG codec unit access the bus simultaneously.
JPEG codec unit	• Compression and decompression method conforming to the JPEG baseline standard within the range described in this document. • Operational precision: Conforming to JPEG Part 2, ISO-IEC10918-2 • Pixel format: Compression: YCbCr422 Decompression: YCbCr444, YCbCr422, YCbCr411, YCbCr420 Output pixel format to the buffer: YCbCr422, ARGB8888, RGB565 • Four quantization tables provided • Four Huffman tables provided (two tables for AC coefficients and two tables for DC coefficients) • Markers supported: SOI, SOF0, SOS, DQT, DHT, DRI, RSTm, and EOI • Image data rate: Max. 133.33 Mbytes/s (at 66.67-MHz operation)
Sampling rate converter	• Three channels • Data format: 32-bit stereo (16 bits each to L/R), 16-bit monaural • Input sampling rate: 8/11.025/12/16/22.05/24/32/44.1/48 kHz • Output sampling rate: 32/44.1/48 kHz, 8/16 kHz (input sampling rate: 44.1 kHz)

chanhvinh.com

Items	Specification
Sound generator	• Capable of adjusting sound volume using 8-bit PWM output • Four types of operating clocks (P0ϕ/2, P0ϕ/4, P0ϕ/8, and P0ϕ/16) can be selected. • Frequency settings in the 31-Hz to 20-kHz range with precision of 1% or less • Automatic attenuator function can be selected
SD host interface	• Two channels • SD memory I/O card interface (1-/4-bits SD bus) • Error check function: CRC7 (command), CRC16 (data) • Interrupt requests — Card access interrupt — SDIO access interrupt — Card detect interrupt • DMA transfer requests — SD_BUF write — SD_BUF read • Card detection function, write protect supported
MMC host interface	• Interface to multi-media card (MMC) • Data bus: 1-/4-/8-bit MMC mode • Interrupt requests: card detection, error/time-out, and normal operation • DMA transfer requests: CE_DATA write and CE_DATA read • Card detection function
General I/O ports	• SH7268: 101 I/Os, 4 inputs with open-drain outputs, and 6 inputs • SH7269: 133 I/Os, 8 inputs with open-drain outputs, and 8 inputs • Input or output can be selected for each bit
A/D converter	• 10-bit resolution • SH7268: Six input channels, SH7269: Eight input channels • A/D conversion request by the external trigger or timer trigger
Motor control PWM timer	• Two 10-bit PWM channels, each with eight outputs
User break controller	• Two break channels • Address, data value, access mode, and data size assignable as break conditions.
User debugging interface	• E10A emulator support • JTAG-standard pin assignment

chanhvinh.com

Items	Specification
On-chip RAM	• 64-Kbyte memory for high-speed operation (16 Kbytes × 4) • 2.5-Mbyte large capacity memory for video display/recording and work (128-Kbytes are used for data retention) • 128-Kbyte memory for data retention (16 Kbytes × 2, 32 Kbytes × 1, 64 Kbytes × 1)
Boot modes	• SH7268/SH7269: Six boot modes (boot modes 0 to 5) Boot mode 0: Booting from memory (bus width: 16 bits) connected to $\overline{CS0}$ area Boot mode 1: Booting from memory (bus width: 32 bits) connected to $\overline{CS0}$ area Boot mode 2: Booting from a NAND flash memory Boot mode 3: Booting from a serial flash memory Boot mode 4: Booting from a NAND flash memory with SD controller Boot mode 5: Booting from a NAND flash memory with MMC controller
Power supply voltage	• Vcc: 1.15 to 1.35 V • PVcc: 3.0 to 3.6 V
Packages	• SH7268 208-pin QFP, 28-mm square, 0.5-mm pitch JEITA package code: P-LQFP208-28 × 28-0.50 Renesas code: PLQP0208KB-A • SH7269 (QFP) 256-pin QFP, 28-mm square, 0.4-mm pitch JEITA package code: P-LQFP256-28 × 28-0.40 Renesas code: PLQP0256LB-A • SH7269 (BGA) 272-pin BGA (16 thermal balls), 17-mm square, 0.8-mm pitch JEITA package code: P-LFBGA272-17 × 17-0.80 Renesas code: PRBG0272GA-A

chanhvinh.com

1.2 Product Lineup

Table 1.2 Product Lineup

Product Classification	Product Code	Controller Area Network	Operating Temperature	Package
SH7268 Group	R5S72680W266FP	Not included	Regular specifications (-20 to +85°C)	208-pin QFP
	R5S72681W266FP	Included		
	R5S72680P266FP	Not included	Wide-range specifications (-40 to +85°C)	
	R5S72681P266FP	Included		
SH7269 Group	R5S72690W266FP	Not included	Regular specifications (-20 to +85°C)	256-pin QFP
	R5S72691W266FP	Included		
	R5S72690P266FP	Not included	Wide-range specifications (-40 to +85°C)	
	R5S72691P266FP	Included		
	R5S72690W266BG	Not included	Regular specifications (-20 to +85°C)	272-pin BGA
	R5S72691W266BG	Included		
	R5S72690P266BG	Not included	Wide-range specifications (-40 to +85°C)	
	R5S72691P266BG	Included		

chanhvinh.com

1.3 Block Diagram

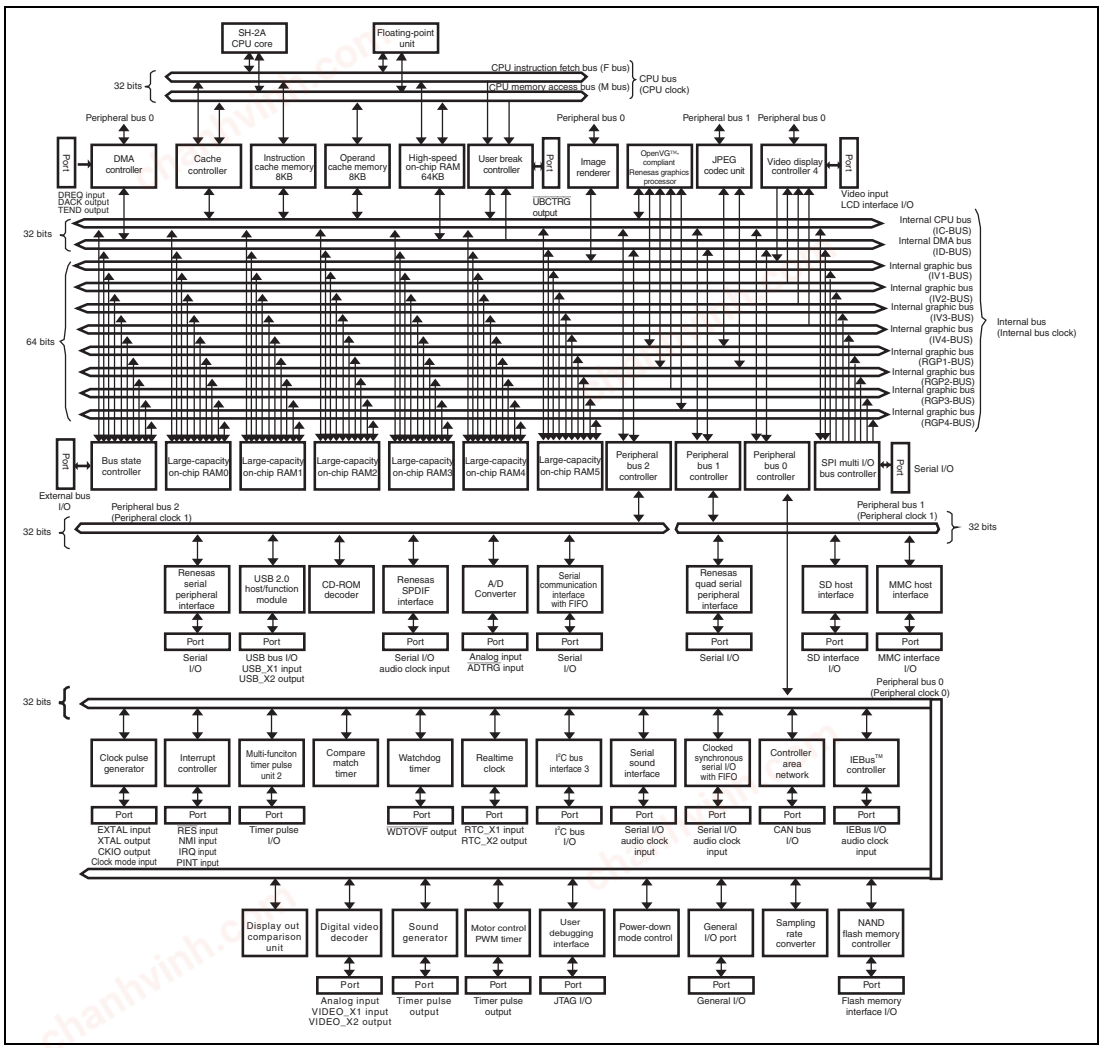

Figure 1.1 Block Diagram

chanhvinh.com

1.4 Pin Assignment

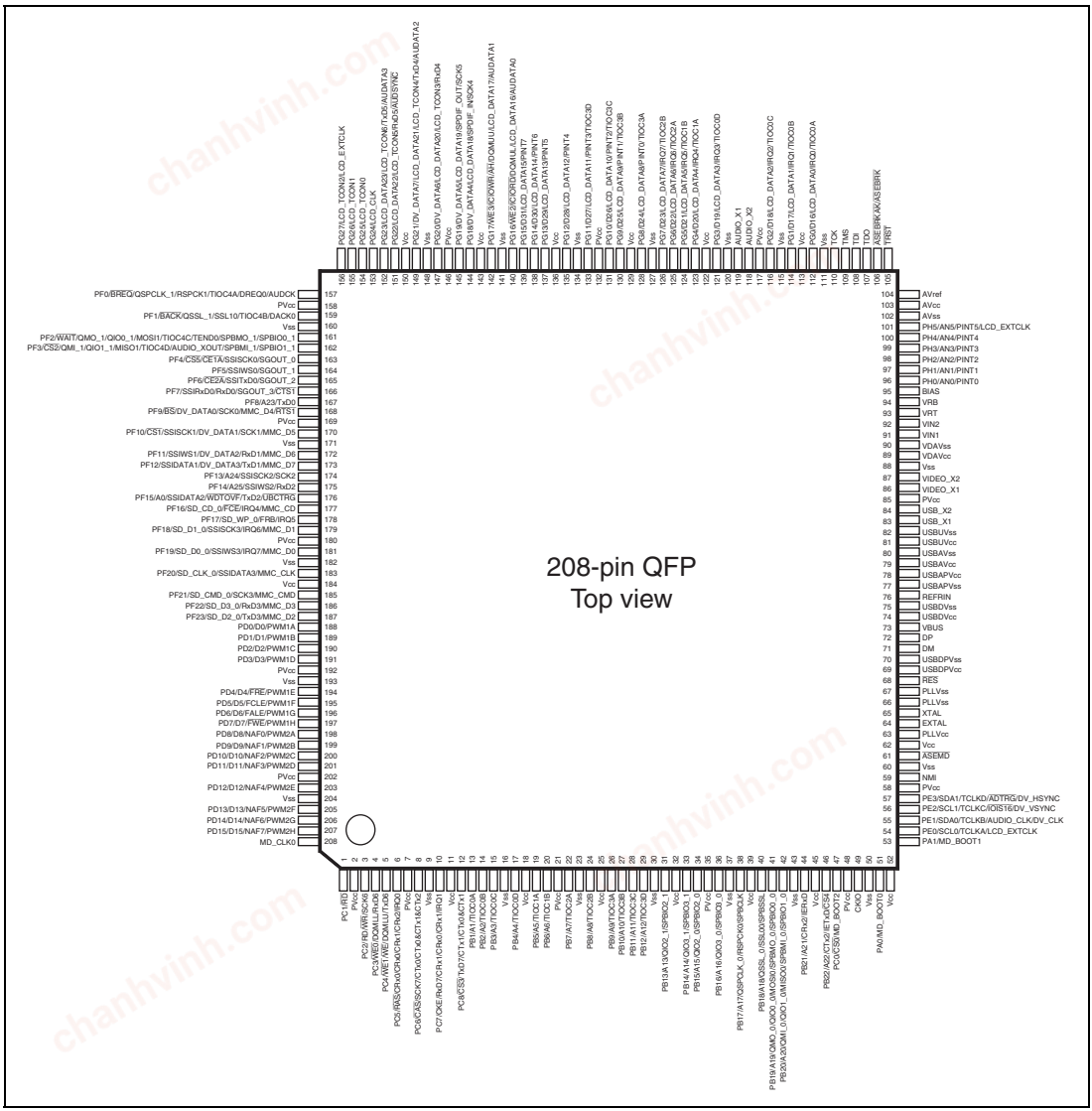

Figure 1.2 (1) Pin Assignment for the SH7268 Group

chanhvinh.com

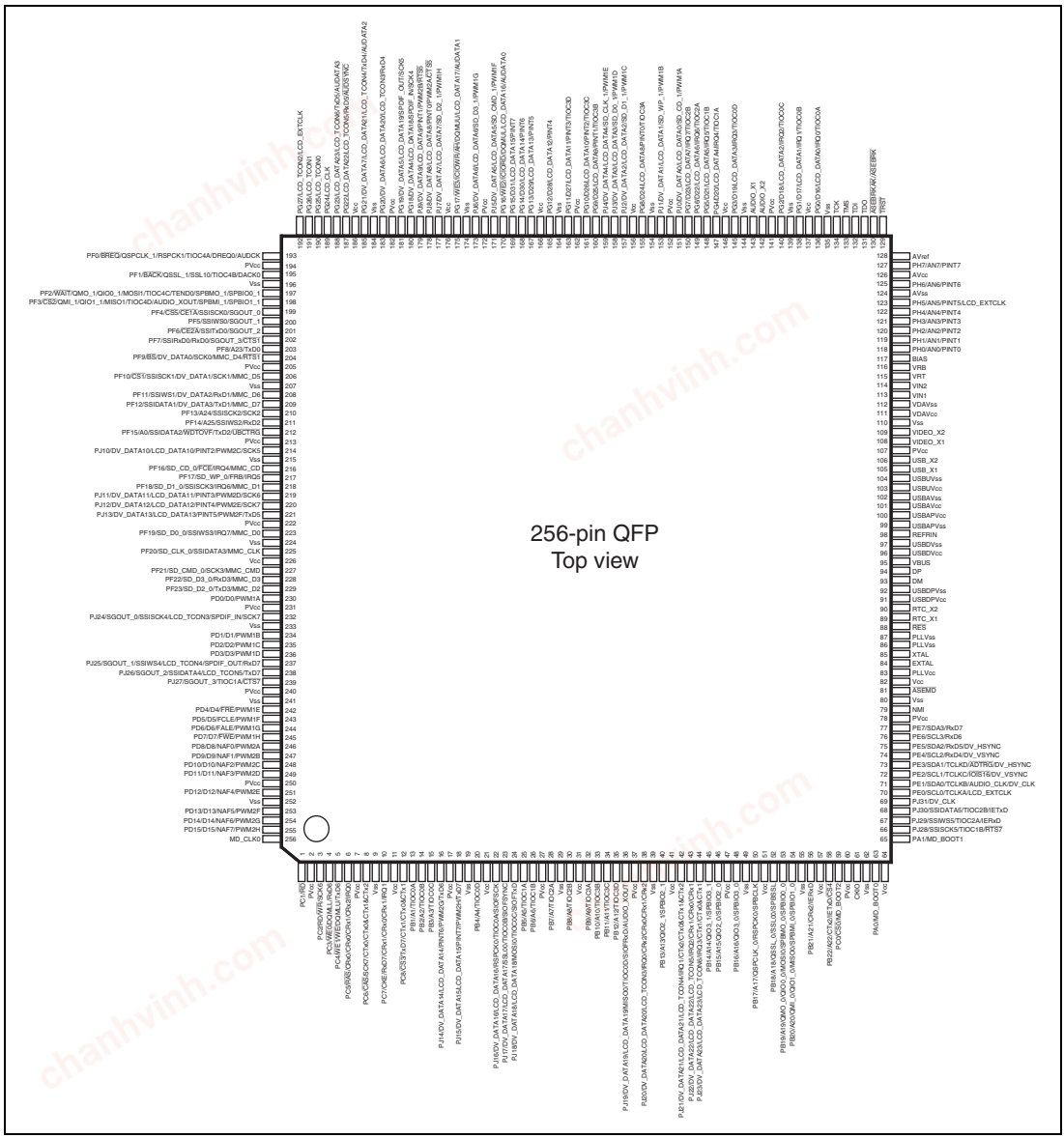

Figure 1.2 (2) Pin Assignment for the SH7269 Group (QFP)

chanhvinh.com

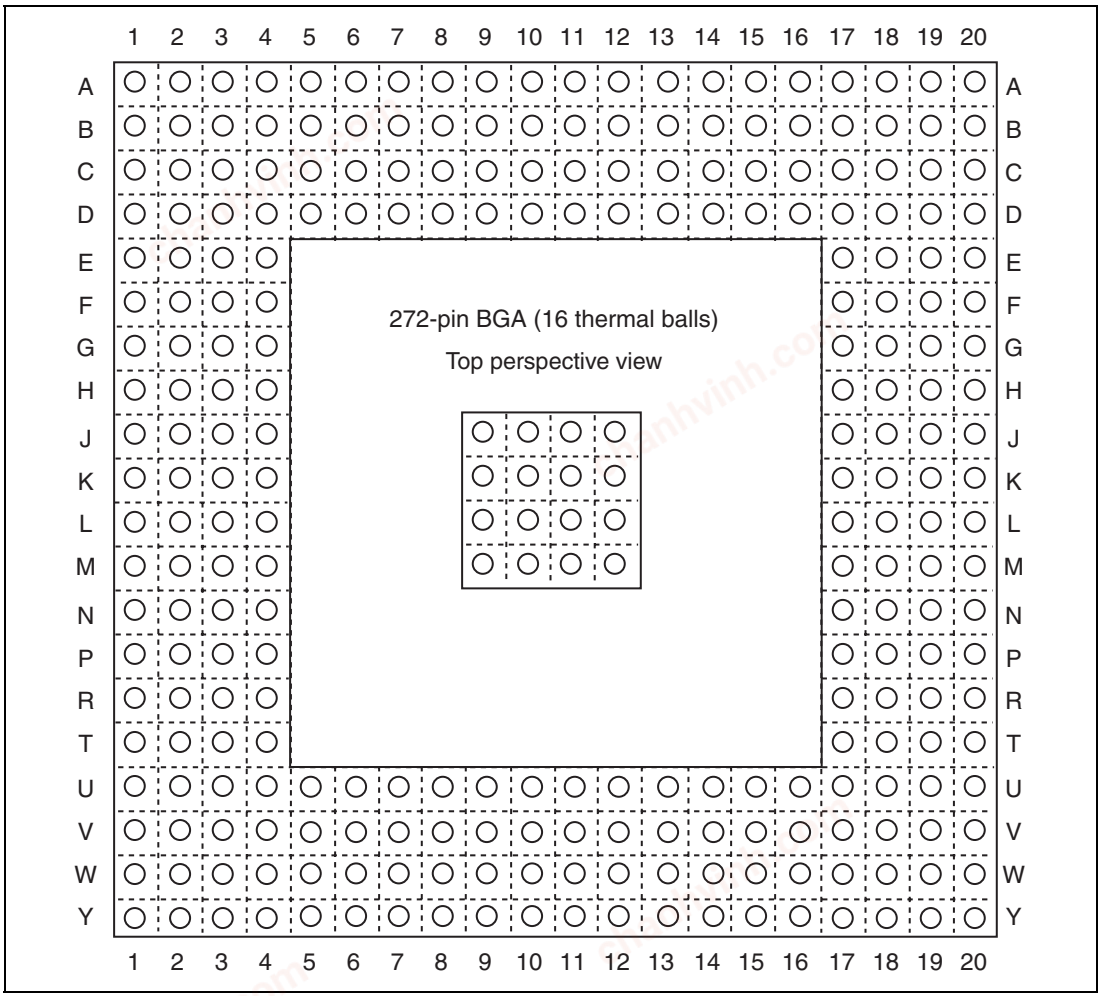

Figure 1.2 (3) Pin Assignment for the SH7269 Group (BGA)

chanhvinh.com

1.5 Pin Functions

Table 1.3 Pin Functions

Classification	Symbol	I/O	Name	Function
Power supply	Vcc	I	Power supply	Power supply pins. All the Vcc pins must be connected to the system power supply. This LSI does not operate correctly if there is a pin left open.
	Vss	I	Ground	Ground pins. All the Vss pins must be connected to the system power supply (0 V). This LSI does not operate correctly if there is a pin left open.
	PVcc	I	Power supply for I/O circuits	Power supply for I/O pins. All the PVcc pins must be connected to the system power supply. This LSI does not operate correctly if there is a pin left open.
	PLLVcc	I	Power supply for PLL	Power supply for the on-chip PLL oscillator.
	PLLVss Note: SH7269 (BGA) Group products do not have this pin.	I	Ground for PLL	Ground pin for the on-chip PLL oscillator.

chanhvinh.com

Classification	Symbol	I/O	Name	Function
Clock	EXTAL	I	External clock	Connected to a crystal resonator. An external clock signal may also be input to the EXTAL pin.
	XTAL	O	Crystal	Connected to a crystal resonator.
	CKIO	O	System clock I/O	Supplies the system clock to external devices.
	AUDIO_CLK	I	External clock for audio	Input pin of external clock for audio. A clock input to the divider is selected from an oscillation clock input on this pin or pins AUDIO_X1 and AUDIO_X2.
	AUDIO_X1	I	Crystal resonator/ external clock for audio	Pins connected to a crystal resonator for audio. An external clock can be input on pin AUDIO_X1. A clock input to the divider is selected from an oscillation clock input on these pins or the AUDIO_CLK pin.
	AUDIO_X2	O		
Clock	AUDIO_XOUT	O	AUDIO_X1 clock output	Output for the on-chip crystal oscillator on AUDIO_X1 or the external clock signal.
Operating mode control	MD_BOOT2 MD_BOOT1 MD_BOOT0	I	Mode set	Sets the operating mode. Do not change the signal levels on these pins while the $\overline{\text{RES}}$ pin is asserted or until the mode is fixed, after the negation.
	MD_CLK0	I	Clock mode set	Switches the SSCG circuit on or off.
	$\overline{\text{ASEMD}}$	I	ASE mode	If a low level is input at the $\overline{\text{ASEMD}}$ pin while the $\overline{\text{RES}}$ pin is asserted, ASE mode is entered; if a high level is input, product chip mode is entered. In ASE mode, the E10A-USB emulator function is enabled. When this function is not in use, fix it high.

chanhvinh.com

Classification	Symbol	I/O	Name	Function
System control	$\overline{\text{RES}}$	I	Power-on reset	This LSI enters the power-on reset state when this signal goes low.
	$\overline{\text{WDTOVF}}$	O	Watchdog timer overflow	Outputs an overflow signal from the watchdog timer.
	$\overline{\text{BREQ}}$	I	Bus-mastership request	A low level is input to this pin when an external device requests the release of the bus mastership.
	$\overline{\text{BACK}}$	O	Bus-mastership request acknowledge	Indicates that the bus mastership has been released to an external device. Reception of the $\overline{\text{BACK}}$ signal informs the device which has output the $\overline{\text{BREQ}}$ signal that it has acquired the bus.
Interrupts	NMI	I	Non-maskable interrupt	Non-maskable interrupt request pin. Fix it high when not in use.
	IRQ7 to IRQ0	I	Interrupt requests 7 to 0	Maskable interrupt request pins. Level-input or edge-input detection can be selected. When the edge-input detection is selected, the rising edge, falling edge, or both edges can also be selected.
	PINT7 to PINT0	I	Interrupt requests 7 to 0	Maskable interrupt request pins. Only level-input detection can be selected.
Address bus	A25 to A0	O	Address bus	Outputs addresses.
Data bus	D31 to D0	I/O	Data bus	Bidirectional data bus.

chanhvinh.com

Classification	Symbol	I/O	Name	Function
Bus control	$\overline{CS5}$ to $\overline{CS0}$	O	Chip select 5 to 0	Chip-select signals for external memory or devices.
	$\overline{RD}$	O	Read	Indicates that data is read from an external device.
	RD/$\overline{WR}$	O	Read/write	Read/write signal.
	$\overline{BS}$	O	Bus start	Bus-cycle start signal.
	$\overline{AH}$	O	Address hold	Address hold timing signal for the device that uses the address/data-multiplexed bus.
	$\overline{WAIT}$	I	Wait	Inserts a wait cycle into the bus cycles during access to the external space.
	$\overline{WE0}$	O	Byte select	Indicates a write access to bits 7 to 0 of data of external memory or device.
	$\overline{WE1}$	O	Byte select	Indicates a write access to bits 15 to 8 of data of external memory or device.
	$\overline{WE2}$	O	Byte select	Indicates a write access to bits 23 to 16 of data of external memory or device.
	$\overline{WE3}$	O	Byte select	Indicates a write access to bits 31 to 24 of data of external memory or device.
	DQMLL	O	Byte select	Selects bits D7 to D0 when SDRAM is connected.
	DQMLU	O	Byte select	Selects bits D15 to D8 when SDRAM is connected.
	DQMUL	O	Byte select	Selects bits D23 to D16 when SDRAM is connected.
	DQMUU	O	Byte select	Selects bits D31 to D24 when SDRAM is connected.

chanhvinh.com

Classification	Symbol	I/O	Name	Function
Bus control	$\overline{RAS}$	O	RAS	Connected to the $\overline{RAS}$ pin when SDRAM is connected.
	$\overline{CAS}$	O	CAS	Connected to the $\overline{CAS}$ pin when SDRAM is connected.
	CKE	O	CK enable	Connected to the CKE pin when SDRAM is connected.
	$\overline{CE1A}$	O	Lower byte select for PCMCIA card	Connected to PCMCIA card select signals D7 to D0.
	$\overline{CE2A}$	O	Upper byte select for PCMCIA card	Connected to PCMCIA card select signals D15 to D8.
	$\overline{ICIOWR}$	O	Write strobe for PCMCIA	Connected to the PCMCIA I/O write strobe signal.
	$\overline{ICIORD}$	O	Read strobe for PCMCIA	Connected to the PCMCIA I/O read strobe signal.
	$\overline{WE}$	O	Write strobe for PCMCIA memory	Connected to the PCMCIA memory write strobe signal.
	$\overline{IOIS16}$	I	PCMCIA dynamic bus sizing	Indicates 16-bit I/O of the PCMCIA.
Direct memory access controller	DREQ0	I	DMA-transfer request	Input pin to receive external requests for DMA transfer.
	DACK0	O	DMA-transfer request accept	Output pin for signals indicating acceptance of external requests from external devices.
	TEND0	O	DMA-transfer end output	Output pin for DMA transfer end.
Multi-function timer pulse unit 2	TCLKA, TCLKB, TCLKC, TCLKD	I	Timer clock input	External clock input pins for the timer.
	TIOC0A, TIOC0B, TIOC0C, TIOC0D	I/O	Input capture/ output compare (channel 0)	The TGRA_0 to TGRD_0 input capture input/output compare output/PWM output pins.
	TIOC1A, TIOC1B	I/O	Input capture/ output compare (channel 1)	The TGRA_1 and TGRB_1 input capture input/output compare output/PWM output pins.
	TIOC2A, TIOC2B	I/O	Input capture/ output compare (channel 2)	The TGRA_2 and TGRB_2 input capture input/output compare output/PWM output pins.

chanhvinh.com

Classification	Symbol	I/O	Name	Function
Multi-function timer pulse unit 2	TIOC3A, TIOC3B, TIOC3C, TIOC3D	I/O	Input capture/ output compare (channel 3)	The TGRA_3 to TGRD_3 input capture input/output compare output/PWM output pins.
	TIOC4A, TIOC4B, TIOC4C, TIOC4D	I/O	Input capture/ output compare (channel 4)	The TGRA_4 and TGRB_4 input capture input/output compare output/PWM output pins.
Realtime clock	RTC_X1	I	Crystal resonator for realtime clock/ external clock	Connected to 32.768-kHz crystal resonator. The RTC_X1 pin can also be used to input an external clock. The RTC_X1 and RTC_X2 pins are not implemented on the SH7268.
	RTC_X2	O		
Serial communication interface with FIFO	TxD7 to TxD0	O	Transmit data	Data output pins.
	RxD7 to RxD0	I	Receive data	Data input pins.
	SCK7 to SCK0	I/O	Serial clock	Clock input/output pins.
	$\overline{\text{RTS7}}$, $\overline{\text{RTS5}}$, $\overline{\text{RTS1}}$,	O	Transmit request	Modem control pins. Only $\overline{\text{RTS1}}$ can be used in the SH7268 Group.
	$\overline{\text{CTS7}}$, $\overline{\text{CTS5}}$, $\overline{\text{CTS1}}$	I	Transmit enable	Modem control pins. Only $\overline{\text{CTS1}}$ can be used in the SH7268 Group.
Renesas serial peripheral interface	MOSI1, MOSI0	I/O	Data	Data I/O pins.
	MISO1, MISO0	I/O	Data	Data I/O pins.
	RSPCK1, RSPCK0	I/O	Clock	Clock I/O pins.
	SSL00, SSL10	I/O	Slave select	Slave select I/O pins.
Renesas quad serial peripheral interface	QMO_0/QIO0_0, QMO_1/QIO0_1	I/O	Data	Data I/O pins.
	QMI_0/QIO1_0, QMI_1/QIO1_1	I/O	Data	Data I/O pins.
	QIO2_0, QIO2_1	I/O	Data	Data I/O pins.
	QIO3_0, QIO3_1	I/O	Data	Data I/O pins.
	QSPCLK_0, QSPCLK_1	O	Clock	Clock output pins.
	QSSL_0, QSSL_1	O	Slave select	Slave select output pins.

chanhvinh.com

Classification	Symbol	I/O	Name	Function
SPI multi I/O bus controller	SPBCLK	O	Clock	Clock output pins.
	SPBSSL	O	Slave select	Slave select output pins.
	SPBMO_0/SPBIO0_0, SPBMI_0/SPBIO1_0, SPBIO2_0, SPBIO3_0	I/O	Data	Data I/O pins.
	SPBMO_1/SPBIO0_1, SPBMI_1/SPBIO1_1, SPBIO2_1, SPBIO3_1	I/O	Data	Data I/O pins.
I^2C bus interface 3	SCL3 to SCL0	I/O	Serial clock pin	Serial clock I/O pins. Only SCL1 and SCL0 can be used in the SH7268 Group.
	SDA3 to SDA0	I/O	Serial data pin	Serial data I/O pins. Only SDA1 and SDA0 can be used in the SH7268 Group.
Serial sound interface	SSITxD0	O	Data output	Serial data output pin.
	SSIRxD0	I	Data input	Serial data input pin.
	SSIDATA5 to SSIDATA1	I/O	Data I/O	Serial data I/O pins. Only SSIDATA3 to SSIDATA1 can be used in the SH7268 Group.
	SSISCK5 to SSISCK0	I/O	SSI clock I/O	I/O pins for serial clocks. Only SSISCK3 to SSISCK0 can be used in the SH7268 Group.
	SSIWS5 to SSIWS0	I/O	SSI clock LR I/O	I/O pins for word selection. Only SSIWS3 to SSIWS0 can be used in the SH7268 Group.
Clocked synchronous serial I/O with FIFO	SIOFTxD	O	Data output	Data output pin.
	SIOFRxD	I	Data input	Data input pin.
	SIOFSCK	I/O	I/O clock	Clock I/O pin.
	SIOFSYNC	I/O	I/O chip select	I/O pin for chip selection.
Controller area network	CTx2 to CTx0	O	CAN bus transmit data	Output pins for transmit data on the CAN bus.
	CRx2 to CRx0	I	CAN bus receive data	Output pins for receive data on the CAN bus.

chanhvinh.com

Classification	Symbol	I/O	Name	Function
IEBus™ controller	IETxD	O	IEBus™ controller transmit data	Output pin for transmit data on IEBus™ controller.
	IERxD	I	IEBus™ controller receive data	Input pin for receive data on IEBus™ controller.
Renesas SPDIF interface	SPDIF_OUT	O	Output data	Transmit data output pin.
	SPDIF_IN	I	Input data	Receive data input pin.
NAND flash memory controller	FALE	O	Flash memory address latch enable	Asserted for address output and negated for data I/O.
	$\overline{\text{FRE}}$	O	Flash memory read enable	Reads data at falling edge.
	$\overline{\text{FCE}}$	O	Flash memory chip enable	Enables the flash memory connected to this LSI.
	FCLE	O	Flash memory command latch enable	Asserted at command output.
	FRB	I	Flash memory ready/busy	High level indicates ready state and low level indicates busy state.
	$\overline{\text{FWE}}$	O	Flash memory write enable	Flash memory latches commands, addresses, and data at falling edge.
	NAF7 to NAF0	I/O	Flash memory data	Data I/O pins.
USB 2.0 host/function module	DP	I/O	USB 2.0 host/function module D+ data	D+ data pin for USB 2.0 host/function module bus.
	DM	I/O	USB 2.0 host/function module D– data	D– data pin for USB 2.0 host/function module bus.
	VBUS	I	VBUS input	Connected to Vbus on USB 2.0 host/function module bus.
	REFRIN	I	Reference input	Connected to USBAPVss via 5.6-kΩ ± 1% resistance.

chanhvinh.com

Classification	Symbol	I/O	Name	Function
USB 2.0 host/function module	USB_X1	I	Crystal resonator/ external clock for USB 2.0 host/function module	Connected to a crystal resonator for USB 2.0 host/function module. An external clock signal may also be input to the USB_X1 pin.
	USB_X2	O		
	USBAPVcc	I	Power supply for transceiver analog pins	Power supply for pins.
	USBAPVss Note: SH7269 (BGA) Group products do not have this pin.	I	Ground for transceiver analog pins	Ground for pins.
	USBDPVcc Note: SH7269 (BGA) Group products do not have this pin.	I	Power supply for transceiver digital pins	Power supply for pins.
	USBDPVss Note: SH7269 (BGA) Group products do not have this pin.	I	Ground for transceiver digital pins	Ground for pins.
	USBAVcc	I	Power supply for transceiver analog core	Power supply for core.
	USBAVss Note: SH7269 (BGA) Group products do not have this pin.	I	Ground for transceiver analog core	Ground for core.
	USBDVcc Note: SH7269 (BGA) Group products do not have this pin.	I	Power supply for transceiver digital core	Power supply for core.

chanhvinh.com

Classification	Symbol	I/O	Name	Function
USB 2.0 host/function module	USBDVss Note: SH7269 (BGA) Group products do not have this pin.	I	Ground for transceiver digital core	Ground for core.
	USBUVcc Note: SH7269 (BGA) Group products do not have this pin.	I	480-MHz power supply for USB 2.0 host/function module	Power supply for 480-MHz sections
	USBUVss Note: SH7269 (BGA) Group products do not have this pin.	I	480-MHz ground for USB 2.0 host/function module	Ground for 480-MHz sections
Digital video decoder	VIN1, VIN2	I	Composite video signal (CVBS) input	Composite video signal (CVBS) input pins.
	VIDEO_X1	I	Crystal resonator/ external clock for digital video decoder	Connected to a crystal resonator for digital video decoder. An external clock signal may also be input to the VIDEO_X1 pin.
	VIDEO_X2	O		
	VRT	O	TOP reference voltage	TOP reference voltage pin for the A/D converter to input video signals. Connected to VDAVss via 0.1-μF capacitor.
	VRB	O	BOTTOM reference voltage	BOTTOM reference voltage pin for the A/D converter to input video signals. Connected to VDAVss via 0.1-μF capacitor.
	BIAS	I	Reference voltage	Reference voltage pin for the A/D converter to input video signals. Connected to VDAVss via 24-kΩ ± 1% resistance.
	VDAVcc	I	Analog power supply	Power supply pin for the A/D converter to input video signals.
	VDAVss	I	Analog ground	Ground pin for the A/D converter to input video signals.

chanhvinh.com

Classification	Symbol	I/O	Name	Function
Video display controller 4	LCD_DATA23 to LCD_DATA0	O	Output data	Data output pins for panel.
	LCD_TCON6 to LCD_TCON0	O	Panel timing adjustment output	Output pins for panel timing adjustment
	LCD_CLK	O	Panel clock	Panel clock output pin.
	LCD_EXTCLK	I	Panel clock source	Panel clock source input pin.
	DV_DATA23 to DV_DATA0	I	Input data	Data input pins for graphics data. Only DV_DATA_7 to DV_DATA0 can be used in the SH7268 Group.
	DV_VSYNC	I	VSYNC input	VSYNC input pin.
	DV_HSYNC	I	HSYNC input	HSYNC input pin.
	DV_CLK	I	Input clock	Clock input signal pin for graphics data.
Sound generator	SGOUT3 to SGOUT0	O	Sound generator output	Sound generator output pins.
SD host interface	SD_CLK_0, SD_CLK_1	O	SD clock	Output pins for SD clock. Only SD_CLK_0 can be used in the SH7268 Group.
	SD_CMD_0, SD_CMD_1	I/O	SD command	SD command output and response input signals. Only SD_CMD_0 can be used in the SH7268 Group.
	SD_D3_0 to SD_D0_0 SD_D3_1 to SD_D0_1	I/O	SD data	SD data bus signals. Only SD_D3_0 to SD_D0_0 can be used in the SH7268 Group.
	SD_CD_0, SD_CD_1	I	SD card detection	SD card detection. Only SD_CD_0 can be used in the SH7268 Group.
	SD_WP_0, SD_WP_1	I	SD write protection	SD write protection signals. Only SD_WP_0 can be used in the SH7268 Group.
MMC host interface	MMC_CLK	O	MMC clock	Output pin for MMC clock.
	MMC_CMD	I/O	MMC command	MMC command output and response input signal.

chanhvinh.com

Classification	Symbol	I/O	Name	Function
MMC host interface	MMC_D7 to MMC_D0	I/O	MMC data	MMC data bus signals.
	MMC_CD	I	MMC card detection	MMC card detection.
Motor control PWM timer	PWM1H to PWM1A PWM2H to PWM2A	O	Timer output	PWM output pins.
A/D converter	AN7 to AN0	I	Analog input pins	Analog input pins. Only AN5 to AN0 can be used in the SH7268 Group.
	$\overline{\text{ADTRG}}$	I	A/D conversion trigger input	External trigger input pin for starting A/D conversion.
	AVcc	I	Analog power supply	Power supply pin for A/D converter.
A/D converter	AVss	I	Analog ground	Ground pin for A/D converter.
	AVref	I	Analog reference voltage	Reference voltage pin for A/D converter.
General I/O ports	PA1, PA0, PB22 to PB1, PC8 to PC0, PD15 to PD0, PF23 to PF0, PG27 to PG0, PJ31 to PJ0	I/O	General port	101 general I/O port pins in the SH7268 Group. 133 general I/O port pins in the SH7269 Group. Only PA1, PA0, PB22 to PB1, PC8 to PC0, PD15 to PD0, PF23 to PF0, and PG27 to PG0 can be used in the SH7268 Group.
	PE7 to PE0	I/O	General port	8 input port pins with open-drain output. Only PE3 to PE0 can be used in the SH7268 Group.
	PH7 to PH0	I	General port	8 general input port pins. Only PH5 to PH0 can be used in the SH7268 Group.
User debugging interface	TCK	I	Test clock	Test-clock input pin.
	TMS	I	Test mode select	Test-mode select signal input pin.
	TDI	I	Test data input	Serial input pin for instructions and data.
	TDO	O	Test data output	Serial output pin for instructions and data.
	$\overline{\text{TRST}}$	I	Test reset	Initialization-signal input pin.

chanhvinh.com

Classification	Symbol	I/O	Name	Function
Emulator interface	AUDATA3 to AUDATA0	O	Data	Branch source or destination address output pins.
	AUDCK	O	Clock	Sync-clock output pin.
	$\overline{\text{AUDSYNC}}$	O	Sync signal	Data start-position acknowledge-signal output pin.
	$\overline{\text{ASEBRKAK}}$	O	Break mode acknowledge	Indicates that the E10A-USB emulator has entered its break mode.
	$\overline{\text{ASEBRK}}$	I	Break request	E10A-USB emulator break input pin.
User break controller	$\overline{\text{UBCTRG}}$	O	User break trigger output	User break condition match trigger output pin.

chanhvinh.com

1.6 List of Pins

Table 1.4 List of Pins

SH7268 Pin No.	SH7269 Pin No.	SH7269 BGA Pin No.	Function 1		Function 2		Function 3		Function 4	
			Symbol	I/O	Symbol	I/O	Symbol	I/O	Symbol	I/O
1	1	C1	PC1	I(s)/O	$\overline{RD}$	O	—	—	—	—
2	2	—	PVcc							
3	3	E2	PC2	I(s)/O	RD/$\overline{WR}$	O	SCK6	I(s)/O	—	—
4	4	E3	PC3	I(s)/O	$\overline{WE0}$/DQMLL	O	RxD6	I(s)	—	—
5	5	F4	PC4	I(s)/O	$\overline{WE1}$/$\overline{WE}$/DQMLU	O	TxD6	O	—	—
6	6	D1	PC5	I(s)/O	$\overline{RAS}$	O	—	—	CRx0	I(s)
7	7	—	PVcc							
8	8	F2	PC6	I(s)/O	$\overline{CAS}$	O	SCK7	I(s)/O	CTx0	O
9	9	—	Vss							
10	10	F3	PC7	I(s)/O	CKE	O	RxD7	I(s)	CRx1	I(s)
11	11	—	Vcc							
12	12	E1	PC8	I(s)/O	$\overline{CS3}$	O	TxD7	O	CTx1	O
13	13	G4	PB1	I(s)/O	A1	O	TIOC0A	I(s)/O	—	—
14	14	G2	PB2	I(s)/O	A2	O	TIOC0B	I(s)/O	—	—
15	15	G3	PB3	I(s)/O	A3	O	TIOC0C	I(s)/O	—	—

SH7268 Pin No.	SH7269 Pin No.	SH7269 BGA Pin No.	Function 5		Function 6		Function 7		Simplified Circuit Diagram Figure 1.3
			Symbol	I/O	Symbol	I/O	Symbol	I/O	
1	1	C1	—	—	—	—	—	—	(7)
2	2	—							
3	3	E2	—	—	—	—	—	—	(7)
4	4	E3	—	—	—	—	—	—	(7)
5	5	F4	—	—	—	—	—	—	(7)
6	6	D1	CRx0/CRx1/CRx2	I(s)	IRQ0	I(s)	—	—	(7)
7	7	—							
8	8	F2	CTx0&CTx1&CTx2	O	—	—	—	—	(7)
9	9	—							
10	10	F3	CRx0/CRx1	I(s)	IRQ1	I(s)	—	—	(7)
11	11	—							
12	12	E1	CTx0&CTx1	O	—	—	—	—	(7)
13	13	G4	—	—	—	—	—	—	(7)
14	14	G2	—	—	—	—	—	—	(7)
15	15	G3	—	—	—	—	—	—	(7)

chanhvinh.com

SH7268 Pin No.	SH7269 Pin No.	SH7269 BGA Pin No.	Function 1		Function 2		Function 3		Function 4	
			Symbol	I/O	Symbol	I/O	Symbol	I/O	Symbol	I/O
—	16	F1	PJ14	I(s)/O	DV_DATA14	I(s)	LCD_DATA14	O	PINT6	I(s)
—	17	—	PVcc							
—	18	H2	PJ15	I(s)/O	DV_DATA15	I(s)	LCD_DATA15	O	PINT7	I(s)
16	19	—	Vss							
17	20	H3	PB4	I(s)/O	A4	O	TIOC0D	I(s)/O	—	—
18	21	—	Vcc							
—	22	G1	PJ16	I(s)/O	DV_DATA16	I(s)	LCD_DATA16	O	RSPCK0	I(s)/O
—	23	J3	PJ17	I(s)/O	DV_DATA17	I(s)	LCD_DATA17	O	SSL00	I(s)/O
—	24	J2	PJ18	I(s)/O	DV_DATA18	I(s)	LCD_DATA18	O	MOSI0	I(s)/O
19	25	H1	PB5	I(s)/O	A5	O	TIOC1A	I(s)/O	—	—
20	26	K2	PB6	I(s)/O	A6	O	TIOC1B	I(s)/O	—	—
21	27	—	PVcc							
22	28	J1	PB7	I(s)/O	A7	O	TIOC2A	I(s)/O	—	—
23	29	—	Vss							
24	30	K3	PB8	I(s)/O	A8	O	TIOC2B	I(s)/O	—	—

SH7268 Pin No.	SH7269 Pin No.	SH7269 BGA Pin No.	Function 5		Function 6		Function 7		Simplified Circuit Diagram Figure 1.3
			Symbol	I/O	Symbol	I/O	Symbol	I/O	
—	16	F1	PWM2G	O	TxD6	O	—	—	(7)
—	17	—							
—	18	H2	PWM2H	O	TxD7	O	—	—	(7)
16	19	—							
17	20	H3	—	—	—	—	—	—	(7)
18	21	—							
—	22	G1	TIOC0A	I(s)/O	SIOFSCK	I(s)/O	—	—	(7)
—	23	J3	TIOC0B	I(s)/O	SIOFSYNC	I(s)/O	—	—	(7)
—	24	J2	TIOC0C	I(s)/O	SIOFTxD	O	—	—	(7)
19	25	H1	—	—	—	—	—	—	(7)
20	26	K2	—	—	—	—	—	—	(7)
21	27	—							
22	28	J1	—	—	—	—	—	—	(7)
23	29	—							
24	30	K3	—	—	—	—	—	—	(7)

chanhvinh.com

SH7268 Pin No.	SH7269 Pin No.	SH7269 BGA Pin No.	Function 1		Function 2		Function 3		Function 4	
			Symbol	I/O	Symbol	I/O	Symbol	I/O	Symbol	I/O
25	31	—	Vcc							
26	32	K1	PB9	I(s)/O	A9	O	TIOC3A	I(s)/O	—	—
27	33	L1	PB10	I(s)/O	A10	O	TIOC3B	I(s)/O	—	—
28	34	L2	PB11	I(s)/O	A11	O	TIOC3C	I(s)/O	—	—
29	35	M1	PB12	I(s)/O	A12	O	TIOC3D	I(s)/O	—	—
—	36	L3	PJ19	I(s)/O	DV_DATA19	I(s)	LCD_DATA19	O	MISO0	I(s)/O
—	37	—	PVcc							
—	38	M2	PJ20	I(s)/O	DV_DATA20	I(s)	LCD_DATA20	O	LCD_TCON3	O
30	39	—	Vss							
31	40	N1	PB13	I(s)/O	A13	O	QIO2_1	I(s)/O	—	—
32	41	—	Vcc							
—	42	N2	PJ21	I(s)/O	DV_DATA21	I(s)	LCD_DATA21	O	LCD_TCON4	O
—	43	M3	PJ22	I(s)/O	DV_DATA22	I(s)	LCD_DATA22	O	LCD_TCON5	O
—	44	P1	PJ23	I(s)/O	DV_DATA23	I(s)	LCD_DATA23	O	LCD_TCON6	O
33	45	P2	PB14	I(s)/O	A14	O	QIO3_1	I(s)/O	—	—

SH7268 Pin No.	SH7269 Pin No.	SH7269 BGA Pin No.	Function 5		Function 6		Function 7		Simplified Circuit Diagram Figure 1.3
			Symbol	I/O	Symbol	I/O	Symbol	I/O	
25	31	—							
26	32	K1	—	—	—	—	—	—	(7)
27	33	L1	—	—	—	—	—	—	(7)
28	34	L2	—	—	—	—	—	—	(7)
29	35	M1	—	—	—	—	—	—	(7)
—	36	L3	TIOC0D	I(s)/O	SIOFRxD	I(s)	AUDIO_XOUT	O	(7)
—	37	—							
—	38	M2	IRQ0	I(s)	CRx2	I(s)	CRx0/CRx1/CRx2	I(s)	(7)
30	39	—							
31	40	N1	—	—	—	—	SPBIO2_1	I(s)/O	(7)
32	41	—							
—	42	N2	IRQ1	I(s)	CTx2	O	CTx0&CTx1&CTx2	O	(7)
—	43	M3	IRQ2	I(s)	CRx1	I(s)	CRx0/CRx1	I(s)	(7)
—	44	P1	IRQ3	I(s)	CTx1	O	CTx0&CTx1	O	(7)
33	45	P2	—	—	—	—	SPBIO3_1	I(s)/O	(7)

chanhvinh.com

SH7268 Pin No.	SH7269 Pin No.	SH7269 BGA Pin No.	Function 1		Function 2		Function 3		Function 4	
			Symbol	I/O	Symbol	I/O	Symbol	I/O	Symbol	I/O
34	46	R1	PB15	I(s)/O	A15	O	QIO2_0	I(s)/O	—	—
35	47	—	PVcc							
36	48	R2	PB16	I(s)/O	A16	O	QIO3_0	I(s)/O	—	—
37	49	—	Vss							
38	50	T1	PB17	I(s)/O	A17	O	QSPCLK_0	O	RSPCK0	I(s)/O
39	51	—	Vcc							
40	52	P3	PB18	I(s)/O	A18	O	QSSL_0	O	SSL00	I(s)/O
41	53	P4	PB19	I(s)/O	A19	O	QMO_0/QIO0_0	I(s)/O	MOSI0	I(s)/O
42	54	T2	PB20	I(s)/O	A20	O	QMI_0/QIO1_0	I(s)/O	MISO0	I(s)/O
43	55	—	Vss							
44	56	R3	PB21	I(s)/O	A21	O	CRx2	I(s)	IERxD	I(s)
45	57	—	Vcc							
46	58	U2	PB22	I(s)/O	A22	O	CTx2	O	IETxD	O
47	59	T3	PC0	I(s)/O	$\overline{CS0}$	O	MD_BOOT2	I(s)	—	—
48	60	—	PVcc							

SH7268 Pin No.	SH7269 Pin No.	SH7269 BGA Pin No.	Function 5		Function 6		Function 7		Simplified Circuit Diagram Figure 1.3
			Symbol	I/O	Symbol	I/O	Symbol	I/O	
34	46	R1	—	—	—	—	SPBIO2_0	I(s)/O	(7)
35	47	—							
36	48	R2	—	—	—	—	SPBIO3_0	I(s)/O	(7)
37	49	—							
38	50	T1	—	—	—	—	SPBCLK	O	(7)
39	51	—							
40	52	P3	—	—	—	—	SPBSSL	O	(7)
41	53	P4	—	—	—	—	SPBMO_0/SPBIO0_0	I(s)/O	(7)
42	54	T2	—	—	—	—	SPBMI_0/SPBIO1_0	I(s)/O	(7)
43	55	—							
44	56	R3	—	—	—	—	—	—	(7)
45	57	—							
46	58	U2	$\overline{CS4}$	O	—	—	—	—	(7)
47	59	T3	—	—	—	—	—	—	(7)
48	60	—							

chanhvinh.com

SH7268 Pin No.	SH7269 Pin No.	SH7269 BGA Pin No.	Function 1		Function 2		Function 3		Function 4	
			Symbol	I/O	Symbol	I/O	Symbol	I/O	Symbol	I/O
49	61	V1	CKIO	O	—	—	—	—	—	—
50	62	—	Vss							
51	63	R4	PA0	I(s)/O	MD_BOOT0	I(s)	—	—	—	—
52	64	—	Vcc							
53	65	U5	PA1	I(s)/O	MD_BOOT1	I(s)	—	—	—	—
—	66	Y2	PJ28	I(s)/O	—	—	SSISCK5	I(s)/O	—	—
—	67	W3	PJ29	I(s)/O	—	—	SSIWS5	I(s)/O	—	—
—	68	V4	PJ30	I(s)/O	—	—	SSIDATA5	I(s)/O	—	—
—	69	Y3	PJ31	I(s)/O	DV_CLK	I(s)	—	—	—	—
54	70	W4	PE0	I(s)/O(o)	SCL0	I(s)/O(o)	TCLKA	I(s)	LCD_EXTCLK	I(s)
55	71	V6	PE1	I(s)/O(o)	SDA0	I(s)/O(o)	TCLKB	I(s)	AUDIO_CLK	I(s)
56	72	Y4	PE2	I(s)/O(o)	SCL1	I(s)/O(o)	TCLKC	I(s)	$\overline{\text{IOIS16}}$	I(s)
57	73	V5	PE3	I(s)/O(o)	SDA1	I(s)/O(o)	TCLKD	I(s)	$\overline{\text{ADTRG}}$	I(s)
—	74	V7	PE4	I(s)/O(o)	SCL2	I(s)/O(o)	RxD4	I(s)	DV_VSYNC	I(s)
—	75	W5	PE5	I(s)/O(o)	SDA2	I(s)/O(o)	RxD5	I(s)	DV_HSYNC	I(s)

SH7268 Pin No.	SH7269 Pin No.	SH7269 BGA Pin No.	Function 5		Function 6		Function 7		Simplified Circuit Diagram Figure 1.3
			Symbol	I/O	Symbol	I/O	Symbol	I/O	
49	61	V1	—	—	—	—	—	—	(5)
50	62	—							
51	63	R4	—	—	—	—	—	—	(7)
52	64	—							
53	65	U5	—	—	—	—	—	—	(7)
—	66	Y2	TIOC1B	I(s)/O	$\overline{\text{RTS7}}$	I(s)/O	—	—	(7)
—	67	W3	TIOC2A	I(s)/O	IERxD	I(s)	—	—	(7)
—	68	V4	TIOC2B	I(s)/O	IETxD	O	—	—	(7)
—	69	Y3	—	—	—	—	—	—	(7)
54	70	W4	—	—	—	—	—	—	(9)
55	71	V6	DV_CLK	I(s)	—	—	—	—	(9)
56	72	Y4	DV_VSYNC	I(s)	—	—	—	—	(9)
57	73	V5	DV_HSYNC	I(s)	—	—	—	—	(9)
—	74	V7	—	—	—	—	—	—	(9)
—	75	W5	—	—	—	—	—	—	(9)

chanhvinh.com

SH7268 Pin No.	SH7269 Pin No.	SH7269 BGA Pin No.	Function 1		Function 2		Function 3		Function 4	
			Symbol	I/O	Symbol	I/O	Symbol	I/O	Symbol	I/O
—	76	W7	PE6	I(s)/O(o)	SCL3	I(s)/O(o)	RxD6	I(s)	—	—
—	77	U7	PE7	I(s)/O(o)	SDA3	I(s)/O(o)	RxD7	I(s)	—	—
58	78	—	PVcc							
59	79	V8	NMI	I(s)	—	—	—	—	—	—
60	80	—	Vss							
61	81	W6	$\overline{\text{ASEMD}}$	I(s)	—	—	—	—	—	—
62	82	—	Vcc							
63	83	U6	PLLVcc							
64	84	Y5	EXTAL	I	—	—	—	—	—	—
65	85	Y6	XTAL	O	—	—	—	—	—	—
66	86	—	PLLVss							
67	87	—	PLLVss							
68	88	W9	$\overline{\text{RES}}$	I(s)	—	—	—	—	—	—
—	89	W8	RTC_X1	I	—	—	—	—	—	—
—	90	Y8	RTC_X2	O	—	—	—	—	—	—

SH7268 Pin No.	SH7269 Pin No.	SH7269 BGA Pin No.	Function 5		Function 6		Function 7		Simplified Circuit Diagram Figure 1.3
			Symbol	I/O	Symbol	I/O	Symbol	I/O	
—	76	W7	—	—	—	—	—	—	(9)
—	77	U7	—	—	—	—	—	—	(9)
58	78	—							
59	79	V8	—	—	—	—	—	—	(3)
60	80	—							
61	81	W6	—	—	—	—	—	—	(1)
62	82	—							
63	83	U6							
64	84	Y5	—	—	—	—	—	—	(10)
65	85	Y6	—	—	—	—	—	—	
66	86	—							
67	87	—							
68	88	W9	—	—	—	—	—	—	(1)
—	89	W8	—	—	—	—	—	—	(11)
—	90	Y8	—	—	—	—	—	—	

chanhvinh.com

SH7268 Pin No.	SH7269 Pin No.	SH7269 BGA Pin No.	Function 1		Function 2		Function 3		Function 4	
			Symbol	I/O	Symbol	I/O	Symbol	I/O	Symbol	I/O
69	91	—	USBDPVcc							
70	92	—	USBDPVss							
71	93	Y9	DM	I/O	—	—	—	—	—	—
72	94	Y10	DP	I/O	—	—	—	—	—	—
73	95	W10	VBUS	I	—	—	—	—	—	—
74	96	—	USBDVcc							
75	97	—	USBDVss							
76	98	U11	REFRIN	I	—	—	—	—	—	—
77	99	—	USBAPVss							
78	100	V11	USBAPVcc							
79	101	V12	USBAVcc							
80	102	—	USBAVss							
81	103	—	USBUVcc							
82	104	—	USBUVss							
83	105	Y12	USB_X1	I	—	—	—	—	—	—
84	106	W12	USB_X2	O	—	—	—	—	—	—

SH7268 Pin No.	SH7269 Pin No.	SH7269 BGA Pin No.	Function 5		Function 6		Function 7		Simplified Circuit Diagram Figure 1.3
			Symbol	I/O	Symbol	I/O	Symbol	I/O	
69	91	—							
70	92	—							
71	93	Y9	—	—	—	—	—	—	
72	94	Y10	—	—	—	—	—	—	
73	95	W10	—	—	—	—	—	—	
74	96	—							
75	97	—							
76	98	U11	—	—	—	—	—	—	
77	99	—							
78	100	V11							
79	101	V12							
80	102	—							
81	103	—							
82	104	—							
83	105	Y12	—	—	—	—	—	—	(10)
84	106	W12	—	—	—	—	—	—	

chanhvinh.com

SH7268 Pin No.	SH7269 Pin No.	SH7269 BGA Pin No.	Function 1		Function 2		Function 3		Function 4	
			Symbol	I/O	Symbol	I/O	Symbol	I/O	Symbol	I/O
85	107	—	PVcc							
86	108	Y14	VIDEO_X1	I	—	—	—	—	—	—
87	109	W14	VIDEO_X2	O	—	—	—	—	—	—
88	110	—	Vss							
89	111	U13	VDAVcc							
90	112	U15	VDAVss							
91	113	Y15	VIN1	I(a)	—	—	—	—	—	—
92	114	Y16	VIN2	I(a)	—	—	—	—	—	—
93	115	W15	VRT	O	—	—	—	—	—	—
94	116	W13	VRB	O	—	—	—	—	—	—
95	117	W16	BIAS	O	—	—	—	—	—	—
96	118	V14	PH0	I(s)	AN0	I(a)	PINT0	I(s)	—	—
97	119	V15	PH1	I(s)	AN1	I(a)	PINT1	I(s)	—	—
98	120	Y17	PH2	I(s)	AN2	I(a)	PINT2	I(s)	—	—

SH7268 Pin No.	SH7269 Pin No.	SH7269 BGA Pin No.	Function 5		Function 6		Function 7		Simplified Circuit Diagram Figure 1.3
			Symbol	I/O	Symbol	I/O	Symbol	I/O	
85	107	—							
86	108	Y14	—	—	—	—	—	—	(10)
87	109	W14	—	—	—	—	—	—	
88	110	—							
89	111	U13							
90	112	U15							
91	113	Y15	—	—	—	—	—	—	
92	114	Y16	—	—	—	—	—	—	
93	115	W15	—	—	—	—	—	—	
94	116	W13	—	—	—	—	—	—	
95	117	W16	—	—	—	—	—	—	
96	118	V14	—	—	—	—	—	—	(4)
97	119	V15	—	—	—	—	—	—	(4)
98	120	Y17	—	—	—	—	—	—	(4)

chanhvinh.com

SH7268 Pin No.	SH7269 Pin No.	SH7269 BGA Pin No.	Function 1		Function 2		Function 3		Function 4	
			Symbol	I/O	Symbol	I/O	Symbol	I/O	Symbol	I/O
99	121	V17	PH3	I(s)	AN3	I(a)	PINT3	I(s)	—	—
100	122	V16	PH4	I(s)	AN4	I(a)	PINT4	I(s)	—	—
101	123	W17	PH5	I(s)	AN5	I(a)	PINT5	I(s)	LCD_EXTCLK	I(s)
102	124	W18	AVss							
—	125	U14	PH6	I(s)	AN6	I(a)	PINT6	I(s)	—	—
103	126	Y18	AVcc							
—	127	U16	PH7	I(s)	AN7	I(a)	PINT7	I(s)	—	—
104	128	Y19	AVref							
105	129	V20	$\overline{\text{TRST}}$	I(s)	—	—	—	—	—	—
106	130	U19	$\overline{\text{ASEBRKAK}}$/$\overline{\text{ASEBRK}}$	I(s)/O	—	—	—	—	—	—
107	131	U20	TDO	O	—	—	—	—	—	—
108	132	T18	TDI	I	—	—	—	—	—	—
109	133	R17	TMS	I	—	—	—	—	—	—
110	134	T19	TCK	I	—	—	—	—	—	—
111	135	—	Vss							

SH7268 Pin No.	SH7269 Pin No.	SH7269 BGA Pin No.	Function 5		Function 6		Function 7		Simplified Circuit Diagram Figure 1.3
			Symbol	I/O	Symbol	I/O	Symbol	I/O	
99	121	V17	—	—	—	—	—	—	(4)
100	122	V16	—	—	—	—	—	—	(4)
101	123	W17	—	—	—	—	—	—	(4)
102	124	W18							
—	125	U14	—	—	—	—	—	—	(4)
103	126	Y18							
—	127	U16	—	—	—	—	—	—	(4)
104	128	Y19							
105	129	V20	—	—	—	—	—	—	(3)
106	130	U19	—	—	—	—	—	—	(7)
107	131	U20	—	—	—	—	—	—	(5)
108	132	T18	—	—	—	—	—	—	(2)
109	133	R17	—	—	—	—	—	—	(2)
110	134	T19	—	—	—	—	—	—	(2)
111	135	—							

chanhvinh.com

SH7268 Pin No.	SH7269 Pin No.	SH7269 BGA Pin No.	Function 1		Function 2		Function 3		Function 4	
			Symbol	I/O	Symbol	I/O	Symbol	I/O	Symbol	I/O
112	136	R18	PG0	I(s)/O	D16	I/O	LCD_DATA0	O	IRQ0	I(s)
113	137	—	Vcc							
114	138	R19	PG1	I(s)/O	D17	I/O	LCD_DATA1	O	IRQ1	I(s)
115	139	—	Vss							
116	140	P18	PG2	I(s)/O	D18	I/O	LCD_DATA2	O	IRQ2	I(s)
117	141	—	PVcc							
118	142	T20	AUDIO_X2	O	—	—	—	—	—	—
119	143	R20	AUDIO_X1	I	—	—	—	—	—	—
120	144	—	Vss							
121	145	P17	PG3	I(s)/O	D19	I/O	LCD_DATA3	O	IRQ3	I(s)
122	146	—	Vcc							
123	147	N18	PG4	I(s)/O	D20	I/O	LCD_DATA4	O	IRQ4	I(s)
124	148	P19	PG5	I(s)/O	D21	I/O	LCD_DATA5	O	IRQ5	I(s)
125	149	P20	PG6	I(s)/O	D22	I/O	LCD_DATA6	O	IRQ6	I(s)
126	150	M18	PG7	I(s)/O	D23	I/O	LCD_DATA7	O	IRQ7	I(s)

SH7268 Pin No.	SH7269 Pin No.	SH7269 BGA Pin No.	Function 5		Function 6		Function 7		Simplified Circuit Diagram Figure 1.3
			Symbol	I/O	Symbol	I/O	Symbol	I/O	
112	136	R18	TIOC0A	I(s)/O	—	—	—	—	(8)
113	137	—							
114	138	R19	TIOC0B	I(s)/O	—	—	—	—	(8)
115	139	—							
116	140	P18	TIOC0C	I(s)/O	—	—	—	—	(8)
117	141	—							
118	142	T20	—	—	—	—	—	—	(10)
119	143	R20	—	—	—	—	—	—	
120	144	—							
121	145	P17	TIOC0D	I(s)/O	—	—	—	—	(8)
122	146	—							
123	147	N18	TIOC1A	I(s)/O	—	—	—	—	(8)
124	148	P19	TIOC1B	I(s)/O	—	—	—	—	(8)
125	149	P20	TIOC2A	I(s)/O	—	—	—	—	(8)
126	150	M18	TIOC2B	I(s)/O	—	—	—	—	(8)

chanhvinh.com

SH7268 Pin No.	SH7269 Pin No.	SH7269 BGA Pin No.	Function 1		Function 2		Function 3		Function 4	
			Symbol	I/O	Symbol	I/O	Symbol	I/O	Symbol	I/O
—	151	N19	PJ0	I(s)/O	DV_DATA0	I(s)	LCD_DATA0	O	SD_CD_1	I(s)
—	152	—	PVcc							
—	153	N20	PJ1	I(s)/O	DV_DATA1	I(s)	LCD_DATA1	O	SD_WP_1	I(s)
127	154	—	Vss							
128	155	L18	PG8	I(s)/O	D24	I/O	LCD_DATA8	O	PINT0	I(s)
129	156	—	Vcc							
—	157	M19	PJ2	I(s)/O	DV_DATA2	I(s)	LCD_DATA2	O	SD_D1_1	I(s)/O
—	158	M20	PJ3	I(s)/O	DV_DATA3	I(s)	LCD_DATA3	O	SD_D0_1	I(s)/O
—	159	L20	PJ4	I(s)/O	DV_DATA4	I(s)	LCD_DATA4	O	SD_CLK_1	O
130	160	L19	PG9	I(s)/O	D25	I/O	LCD_DATA9	O	PINT1	I(s)
131	161	K20	PG10	I(s)/O	D26	I/O	LCD_DATA10	O	PINT2	I(s)
132	162	—	PVcc							
133	163	K18	PG11	I(s)/O	D27	I/O	LCD_DATA11	O	PINT3	I(s)
134	164	—	Vss							
135	165	K19	PG12	I(s)/O	D28	I/O	LCD_DATA12	O	PINT4	I(s)

SH7268 Pin No.	SH7269 Pin No.	SH7269 BGA Pin No.	Function 5		Function 6		Function 7		Simplified Circuit Diagram Figure 1.3
			Symbol	I/O	Symbol	I/O	Symbol	I/O	
—	151	N19	PWM1A	O	—	—	—	—	(7)
—	152	—							
—	153	N20	PWM1B	O	—	—	—	—	(7)
127	154	—							
128	155	L18	TIOC3A	I(s)/O	—	—	—	—	(8)
129	156	—							
—	157	M19	PWM1C	O	—	—	—	—	(7)
—	158	M20	PWM1D	O	—	—	—	—	(7)
—	159	L20	PWM1E	O	—	—	—	—	(7)
130	160	L19	TIOC3B	I(s)/O	—	—	—	—	(8)
131	161	K20	TIOC3C	I(s)/O	—	—	—	—	(8)
132	162	—							
133	163	K18	TIOC3D	I(s)/O	—	—	—	—	(8)
134	164	—							
135	165	K19	—	—	—	—	—	—	(8)

chanhvinh.com

SH7268 Pin No.	SH7269 Pin No.	SH7269 BGA Pin No.	Function 1		Function 2		Function 3		Function 4	
			Symbol	I/O	Symbol	I/O	Symbol	I/O	Symbol	I/O
136	166	—	Vcc							
137	167	J20	PG13	I(s)/O	D29	I/O	LCD_DATA13	O	PINT5	I(s)
138	168	J19	PG14	I(s)/O	D30	I/O	LCD_DATA14	O	PINT6	I(s)
139	169	H20	PG15	I(s)/O	D31	I/O	LCD_DATA15	O	PINT7	I(s)
140	170	H19	PG16	I(s)/O	$\overline{WE2}$/$\overline{ICIORD}$/DQMUL	O	LCD_DATA16	O	—	—
—	171	G20	PJ5	I(s)/O	DV_DATA5	I(s)	LCD_DATA5	O	SD_CMD_1	I(s)/O
—	172	—	PVcc							
—	173	H18	PJ6	I(s)/O	DV_DATA6	I(s)	LCD_DATA6	O	SD_D3_1	I(s)/O
141	174	—	Vss							
142	175	H17	PG17	I(s)/O	$\overline{WE3}$/$\overline{ICIOWR}$/$\overline{AH}$/DQMUU	O	LCD_DATA17	O	—	—
143	176	—	Vcc							
—	177	G17	PJ7	I(s)/O	DV_DATA7	I(s)	LCD_DATA7	O	SD_D2_1	I(s)/O
—	178	G19	PJ8	I(s)/O	DV_DATA8	I(s)	LCD_DATA8	O	PINT0	I(s)
—	179	F20	PJ9	I(s)/O	DV_DATA9	I(s)	LCD_DATA9	O	PINT1	I(s)
144	180	G18	PG18	I(s)/O	DV_DATA4	I(s)	LCD_DATA18	O	SPDIF_IN	I(s)

SH7268 Pin No.	SH7269 Pin No.	SH7269 BGA Pin No.	Function 5		Function 6		Function 7		Simplified Circuit Diagram Figure 1.3
			Symbol	I/O	Symbol	I/O	Symbol	I/O	
136	166	—							
137	167	J20	—	—	—	—	—	—	(8)
138	168	J19	—	—	—	—	—	—	(8)
139	169	H20	—	—	—	—	—	—	(8)
140	170	H19	—	—	—	—	AUDATA0	O	(7)
—	171	G20	PWM1F	O	—	—	—	—	(7)
—	172	—							
—	173	H18	PWM1G	O	—	—	—	—	(7)
141	174	—							
142	175	H17	—	—	—	—	AUDATA1	O	(7)
143	176	—							
—	177	G17	PWM1H	O	—	—	—	—	(7)
—	178	G19	PWM2A	O	$\overline{CTS5}$	I(s)/O	—	—	(7)
—	179	F20	PWM2B	O	$\overline{RTS5}$	I(s)/O	—	—	(7)
144	180	G18	SCK4	I(s)/O	—	—	—	—	(7)

chanhvinh.com

SH7268 Pin No.	SH7269 Pin No.	SH7269 BGA Pin No.	Function 1		Function 2		Function 3		Function 4	
			Symbol	I/O	Symbol	I/O	Symbol	I/O	Symbol	I/O
145	181	F19	PG19	I(s)/O	DV_DATA5	I(s)	LCD_DATA19	O	SPDIF_OUT	O
146	182	—	PVcc							
147	183	E20	PG20	I(s)/O	DV_DATA6	I(s)	LCD_DATA20	O	LCD_TCON3	O
148	184	—	Vss							
149	185	F17	PG21	I(s)/O	DV_DATA7	I(s)	LCD_DATA21	O	LCD_TCON4	O
150	186	—	Vcc							
151	187	F18	PG22	I(s)/O	—	—	LCD_DATA22	O	LCD_TCON5	O
152	188	E19	PG23	I(s)/O	—	—	LCD_DATA23	O	LCD_TCON6	O
153	189	D20	PG24	I(s)/O	—	—	LCD_CLK	O	—	—
154	190	E18	PG25	I(s)/O	—	—	LCD_TCON0	O	—	—
155	191	C20	PG26	I(s)/O	—	—	LCD_TCON1	O	—	—
156	192	D19	PG27	I(s)/O	—	—	LCD_TCON2	O	LCD_EXTCLK	I(s)
157	193	A18	PF0	I(s)/O	$\overline{\text{BREQ}}$	I(s)	QSPCLK_1	O	RSPCK1	I(s)/O
158	194	—	PVcc							
159	195	C17	PF1	I(s)/O	$\overline{\text{BACK}}$	O	QSSL_1	O	SSL10	I(s)/O

SH7268 Pin No.	SH7269 Pin No.	SH7269 BGA Pin No.	Function 5		Function 6		Function 7		Simplified Circuit Diagram Figure 1.3
			Symbol	I/O	Symbol	I/O	Symbol	I/O	
145	181	F19	SCK5	I(s)/O	—	—	—	—	(7)
146	182	—							
147	183	E20	RxD4	I(s)	—	—	—	—	(7)
148	184	—							
149	185	F17	TxD4	O	—	—	AUDATA2	O	(7)
150	186	—							
151	187	F18	RxD5	I(s)	—	—	$\overline{\text{AUDSYNC}}$	O	(7)
152	188	E19	TxD5	O	—	—	AUDATA3	O	(7)
153	189	D20	—	—	—	—	—	—	(7)
154	190	E18	—	—	—	—	—	—	(7)
155	191	C20	—	—	—	—	—	—	(7)
156	192	D19	—	—	—	—	—	—	(7)
157	193	A18	TIOC4A	I(s)/O	DREQ0	I(s)	AUDCK	O	(7)
158	194	—							
159	195	C17	TIOC4B	I(s)/O	DACK0	O	—	—	(7)

chanhvinh.com

SH7268 Pin No.	SH7269 Pin No.	SH7269 BGA Pin No.	Function 1		Function 2		Function 3		Function 4	
			Symbol	I/O	Symbol	I/O	Symbol	I/O	Symbol	I/O
160	196	—	Vss							
161	197	C15	PF2	I(s)/O	$\overline{\text{WAIT}}$	I(s)	QMO_1/QIO0_1	I(s)/O	MOSI1	I(s)/O
162	198	A17	PF3	I(s)/O	$\overline{\text{CS2}}$	O	QMI_1/QIO1_1	I(s)/O	MISO1	I(s)/O
163	199	B16	PF4	I(s)/O	$\overline{\text{CS5}}$/$\overline{\text{CE1A}}$	O	SSISCK0	I(s)/O	—	—
164	200	B17	PF5	I(s)/O	—	—	SSIWS0	I(s)/O	—	—
165	201	D14	PF6	I(s)/O	$\overline{\text{CE2A}}$	O	SSITxD0	O	—	—
166	202	A16	PF7	I(s)/O	—	—	SSIRxD0	I(s)	—	—
167	203	C16	PF8	I(s)/O	A23	O	—	—	—	—
168	204	B15	PF9	I(s)/O	$\overline{\text{BS}}$	O	—	—	DV_DATA0	I(s)
169	205	—	PVcc							
170	206	A15	PF10	I(s)/O	$\overline{\text{CS1}}$	O	SSISCK1	I(s)/O	DV_DATA1	I(s)
171	207	—	Vss							
172	208	C14	PF11	I(s)/O	—	—	SSIWS1	I(s)/O	DV_DATA2	I(s)
173	209	D13	PF12	I(s)/O	—	—	SSIDATA1	I(s)/O	DV_DATA3	I(s)
174	210	B14	PF13	I(s)/O	A24	O	SSISCK2	I(s)/O	—	—

SH7268 Pin No.	SH7269 Pin No.	SH7269 BGA Pin No.	Function 5		Function 6		Function 7		Simplified Circuit Diagram Figure 1.3
			Symbol	I/O	Symbol	I/O	Symbol	I/O	
160	196	—							
161	197	C15	TIOC4C	I(s)/O	TEND0	O	SPBMO_1/SPBIO0_1	I(s)/O	(7)
162	198	A17	TIOC4D	I(s)/O	AUDIO_XOUT	O	SPBMI_1/SPBIO1_1	I(s)/O	(7)
163	199	B16	—	—	SGOUT_0	O	—	—	(7)
164	200	B17	—	—	SGOUT_1	O	—	—	(7)
165	201	D14	—	—	SGOUT_2	O	—	—	(7)
166	202	A16	RxD0	I(s)	SGOUT_3	O	$\overline{\text{CTS1}}$	I(s)/O	(7)
167	203	C16	TxD0	O	—	—	—	—	(7)
168	204	B15	SCK0	I(s)/O	MMC_D4	I(s)/O	$\overline{\text{RTS1}}$	I(s)/O	(7)
169	205	—							
170	206	A15	SCK1	I(s)/O	MMC_D5	I(s)/O	—	—	(7)
171	207	—							
172	208	C14	RxD1	I(s)	MMC_D6	I(s)/O	—	—	(7)
173	209	D13	TxD1	O	MMC_D7	I(s)/O	—	—	(7)
174	210	B14	SCK2	I(s)/O	—	—	—	—	(7)

chanhvinh.com

SH7268 Pin No.	SH7269 Pin No.	SH7269 BGA Pin No.	Function 1		Function 2		Function 3		Function 4	
			Symbol	I/O	Symbol	I/O	Symbol	I/O	Symbol	I/O
175	211	A14	PF14	I(s)/O	A25	O	SSIWS2	I(s)/O	—	—
176	212	B13	PF15	I(s)/O	A0	O	SSIDATA2	I(s)/O	$\overline{\text{WDTOVF}}$	O
—	213	—	PVcc							
—	214	C13	PJ10	I(s)/O	DV_DATA10	I(s)	LCD_DATA10	O	PINT2	I(s)
—	215	—	Vss							
177	216	A13	PF16	I(s)/O	SD_CD_0	I(s)	—	—	$\overline{\text{FCE}}$	O
178	217	A12	PF17	I(s)/O	SD_WP_0	I(s)	—	—	FRB	I(s)
179	218	B12	PF18	I(s)/O	SD_D1_0	I(s)/O	SSISCK3	I(s)/O	—	—
—	219	C11	PJ11	I(s)/O	DV_DATA11	I(s)	LCD_DATA11	O	PINT3	I(s)
—	220	A11	PJ12	I(s)/O	DV_DATA12	I(s)	LCD_DATA12	O	PINT4	I(s)
—	221	B11	PJ13	I(s)/O	DV_DATA13	I(s)	LCD_DATA13	O	PINT5	I(s)
180	222	—	PVcc							
181	223	C12	PF19	I(s)/O	SD_D0_0	I(s)/O	SSIWS3	I(s)/O	—	—
182	224	—	Vss							
183	225	A10	PF20	I(s)/O	SD_CLK_0	O	SSIDATA3	I(s)/O	—	—

SH7268 Pin No.	SH7269 Pin No.	SH7269 BGA Pin No.	Function 5		Function 6		Function 7		Simplified Circuit Diagram Figure 1.3
			Symbol	I/O	Symbol	I/O	Symbol	I/O	
175	211	A14	RxD2	I(s)	—	—	—	—	(7)
176	212	B13	TxD2	O	$\overline{\text{UBCTRG}}$	O	—	—	(7)
—	213	—							
—	214	C13	PWM2C	O	SCK5	I(s)/O	—	—	(7)
—	215	—							
177	216	A13	IRQ4	I(s)	MMC_CD	I(s)	—	—	(7)
178	217	A12	IRQ5	I(s)	—	—	—	—	(7)
179	218	B12	IRQ6	I(s)	MMC_D1	I(s)/O	—	—	(7)
—	219	C11	PWM2D	O	SCK6	I(s)/O	—	—	(7)
—	220	A11	PWM2E	O	SCK7	I(s)/O	—	—	(7)
—	221	B11	PWM2F	O	TxD5	O	—	—	(7)
180	222	—							
181	223	C12	IRQ7	I(s)	MMC_D0	I(s)/O	—	—	(7)
182	224	—							
183	225	A10	—	—	MMC_CLK	O	—	—	(7)

chanhvinh.com

SH7268 Pin No.	SH7269 Pin No.	SH7269 BGA Pin No.	Function 1		Function 2		Function 3		Function 4	
			Symbol	I/O	Symbol	I/O	Symbol	I/O	Symbol	I/O
184	226	—	Vcc							
185	227	B10	PF21	I(s)/O	SD_CMD_0	I(s)/O	—	—	—	—
186	228	A9	PF22	I(s)/O	SD_D3_0	I(s)/O	—	—	—	—
187	229	D9	PF23	I(s)/O	SD_D2_0	I(s)/O	—	—	—	—
188	230	B9	PD0	I/O	D0	I/O	—	—	PWM1A	O
—	231	—	PVcc							
—	232	A8	PJ24	I(s)/O	SGOUT_0	O	SSISCK4	I(s)/O	LCD_TCON3	O
—	233	—	Vss							
189	234	C9	PD1	I/O	D1	I/O	—	—	PWM1B	O
190	235	B8	PD2	I/O	D2	I/O	—	—	PWM1C	O
191	236	A7	PD3	I/O	D3	I/O	—	—	PWM1D	O
—	237	B7	PJ25	I(s)/O	SGOUT_1	O	SSIWS4	I(s)/O	LCD_TCON4	O
—	238	C8	PJ26	I(s)/O	SGOUT_2	O	SSIDATA4	I(s)/O	LCD_TCON5	O
—	239	A6	PJ27	I(s)/O	SGOUT_3	O	—	—	—	—
192	240	—	PVcc							

SH7268 Pin No.	SH7269 Pin No.	SH7269 BGA Pin No.	Function 5		Function 6		Function 7		Simplified Circuit Diagram Figure 1.3
			Symbol	I/O	Symbol	I/O	Symbol	I/O	
184	226	—							
185	227	B10	SCK3	O	MMC_CMD	I(s)/O	—	—	(7)
186	228	A9	RxD3	I(s)	MMC_D3	I(s)/O	—	—	(7)
187	229	D9	TxD3	I(s)/O	MMC_D2	I(s)/O	—	—	(7)
188	230	B9	—	—	—	—	—	—	(6)
—	231	—							
—	232	A8	SPDIF_IN	I(s)	SCK7	I(s)/O	—	—	(7)
—	233	—							
189	234	C9	—	—	—	—	—	—	(6)
190	235	B8	—	—	—	—	—	—	(6)
191	236	A7	—	—	—	—	—	—	(6)
—	237	B7	SPDIF_OUT	O	RxD7	I(s)	—	—	(7)
—	238	C8	—	—	TxD7	O	—	—	(7)
—	239	A6	TIOC1A	I(s)/O	$\overline{\text{CTS7}}$	I(s)/O	—	—	(7)
192	240	—							

chanhvinh.com

SH7268 Pin No.	SH7269 Pin No.	SH7269 BGA Pin No.	Function 1		Function 2		Function 3		Function 4	
			Symbol	I/O	Symbol	I/O	Symbol	I/O	Symbol	I/O
193	241	—	Vss							
194	242	B6	PD4	I/O	D4	I/O	$\overline{\text{FRE}}$	O	PWM1E	O
195	243	D8	PD5	I/O	D5	I/O	FCLE	O	PWM1F	O
196	244	C7	PD6	I/O	D6	I/O	FALE	O	PWM1G	O
197	245	A5	PD7	I/O	D7	I/O	$\overline{\text{FWE}}$	O	PWM1H	O
198	246	B5	PD8	I/O	D8	I/O	NAF0	I/O	PWM2A	O
199	247	C5	PD9	I/O	D9	I/O	NAF1	I/O	PWM2B	O
200	248	D7	PD10	I/O	D10	I/O	NAF2	I/O	PWM2C	O
201	249	A4	PD11	I/O	D11	I/O	NAF3	I/O	PWM2D	O
202	250	—	PVcc							
203	251	C6	PD12	I/O	D12	I/O	NAF4	I/O	PWM2E	O
204	252	—	Vss							
205	253	C4	PD13	I/O	D13	I/O	NAF5	I/O	PWM2F	O
206	254	B4	PD14	I/O	D14	I/O	NAF6	I/O	PWM2G	O
207	255	A3	PD15	I/O	D15	I/O	NAF7	I/O	PWM2H	O
208	256	B3	MD_CLK0	I(s)	—	—	—	—	—	—

SH7268 Pin No.	SH7269 Pin No.	SH7269 BGA Pin No.	Function 5		Function 6		Function 7		Simplified Circuit Diagram Figure 1.3
			Symbol	I/O	Symbol	I/O	Symbol	I/O	
193	241	—							
194	242	B6	—	—	—	—	—	—	(6)
195	243	D8	—	—	—	—	—	—	(6)
196	244	C7	—	—	—	—	—	—	(6)
197	245	A5	—	—	—	—	—	—	(6)
198	246	B5	—	—	—	—	—	—	(6)
199	247	C5	—	—	—	—	—	—	(6)
200	248	D7	—	—	—	—	—	—	(6)
201	249	A4	—	—	—	—	—	—	(6)
202	250	—							
203	251	C6	—	—	—	—	—	—	(6)
204	252	—							
205	253	C4	—	—	—	—	—	—	(6)
206	254	B4	—	—	—	—	—	—	(6)
207	255	A3	—	—	—	—	—	—	(6)
208	256	B3	—	—	—	—	—	—	(1)

chanhvinh.com

[Legend]

(s): Schmitt

(a): Analog

(o): Open drain

Note: Pins to which the PVcc, Vcc, and Vss functions can be allocated on SH7269 (BGA) Group products are listed below.

PVcc: A19, B1, B18, C2, D2, D3, D11, D12, D15, D16, E4, J17, J18, N3, N4, T17, U18, V19, W20, Y11

Vcc: A2, B20, C19, D5, D6, D18, E17, H4, J4, M17, N17, T4, U3, U10, V2, V10, W1

Vss: A1, A20, B2, B19, C3, C10, C18, D4, D10, D17, J9, J10, J11, J12, K4, K9, K10, K11, K12, K17, L4, L9, L10, L11, L12, L17, M4, M9, M10, M11, M12, U1, U4, U8, U9, U12, U17, V3, V9, V13, V18, W2, W11, W19, Y1, Y7, Y13, Y20

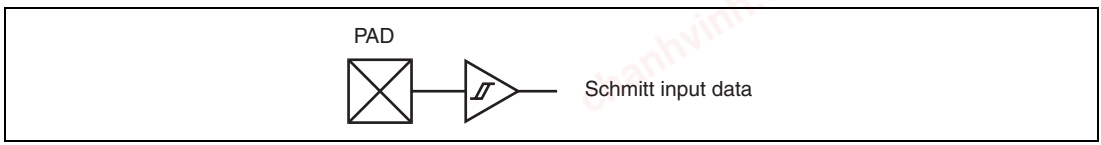

Figure 1.3 (1) Simplified Circuit Diagram (Schmitt Input Buffer)

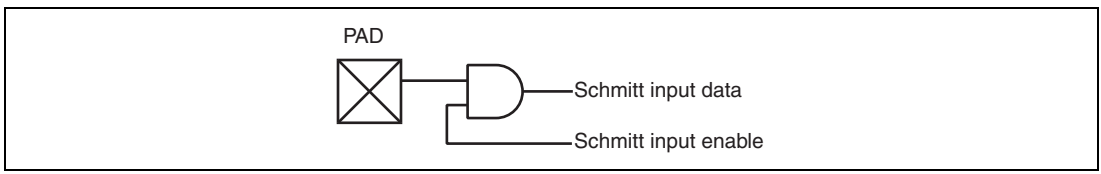

Figure 1.3 (2) Simplified Circuit Diagram (TTL AND Input Buffer)

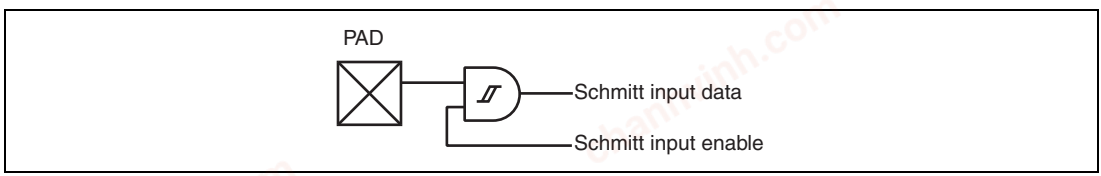

Figure 1.3 (3) Simplified Circuit Diagram (Schmitt AND Input Buffer)

chanhvinh.com

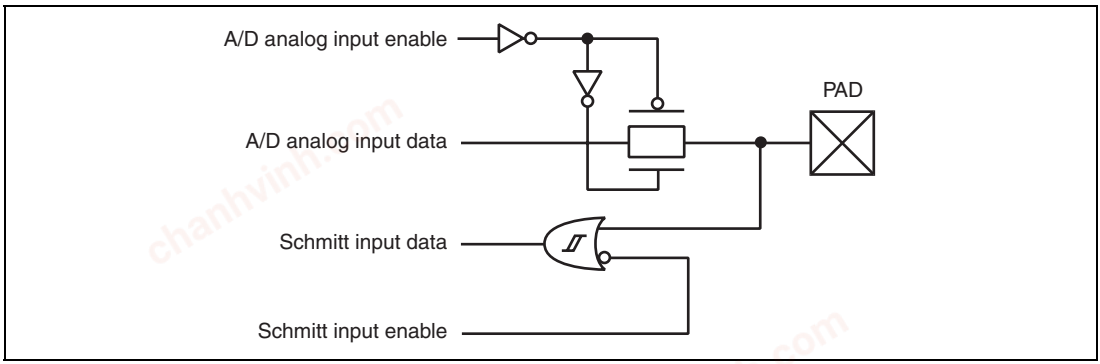

Figure 1.3 (4) Simplified Circuit Diagram (Schmitt OR Input and A/D Input Buffer)

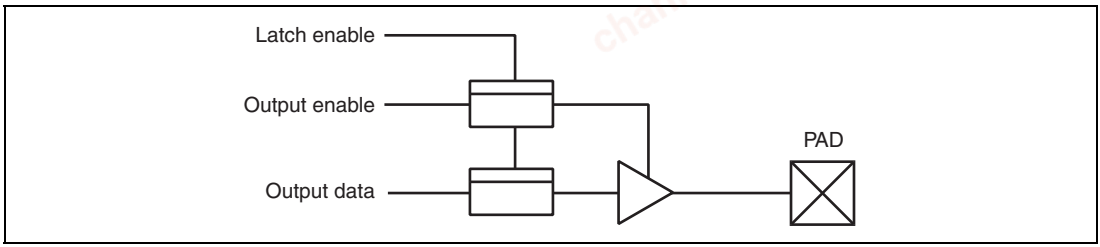

Figure 1.3 (5) Simplified Circuit Diagram (Output Buffer with Enable, with Latch)

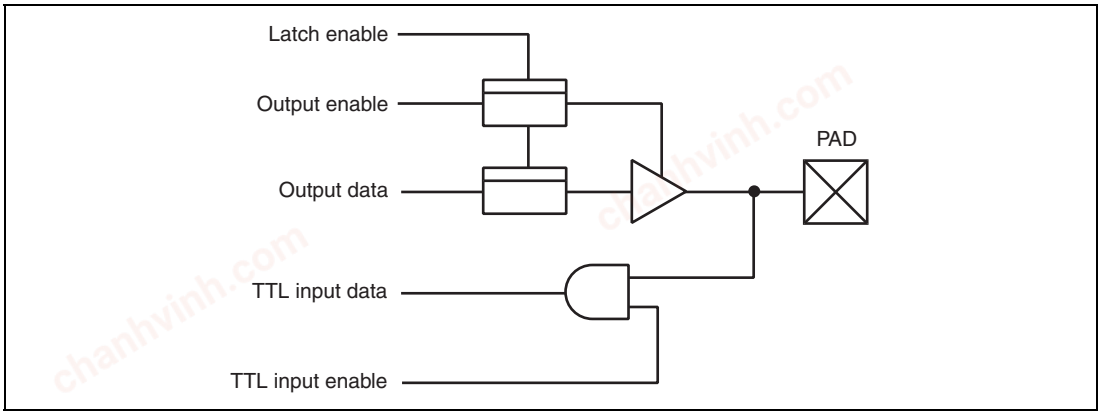

Figure 1.3 (6) Simplified Circuit Diagram (Bidirectional Buffer, TTL AND Input, with Latch)

chanhvinh.com

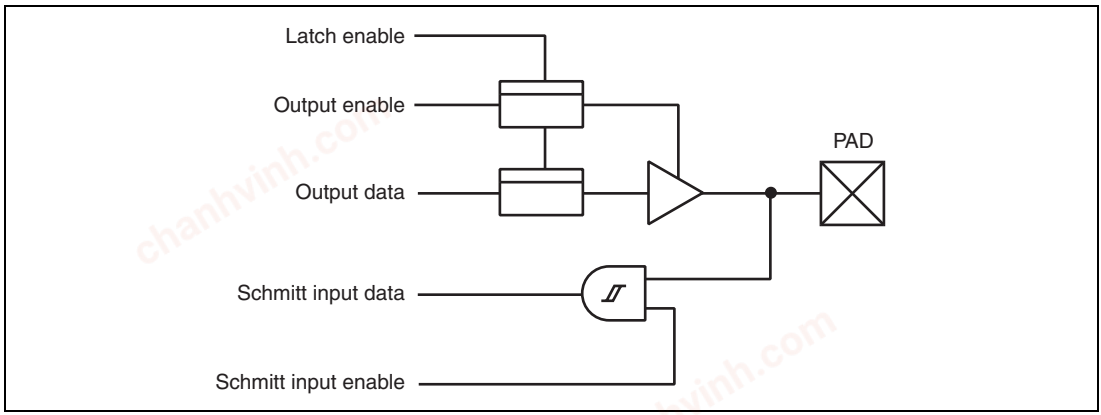

Figure 1.3 (7) Simplified Circuit Diagram (Bidirectional Buffer, Schmitt AND Input, with Latch)

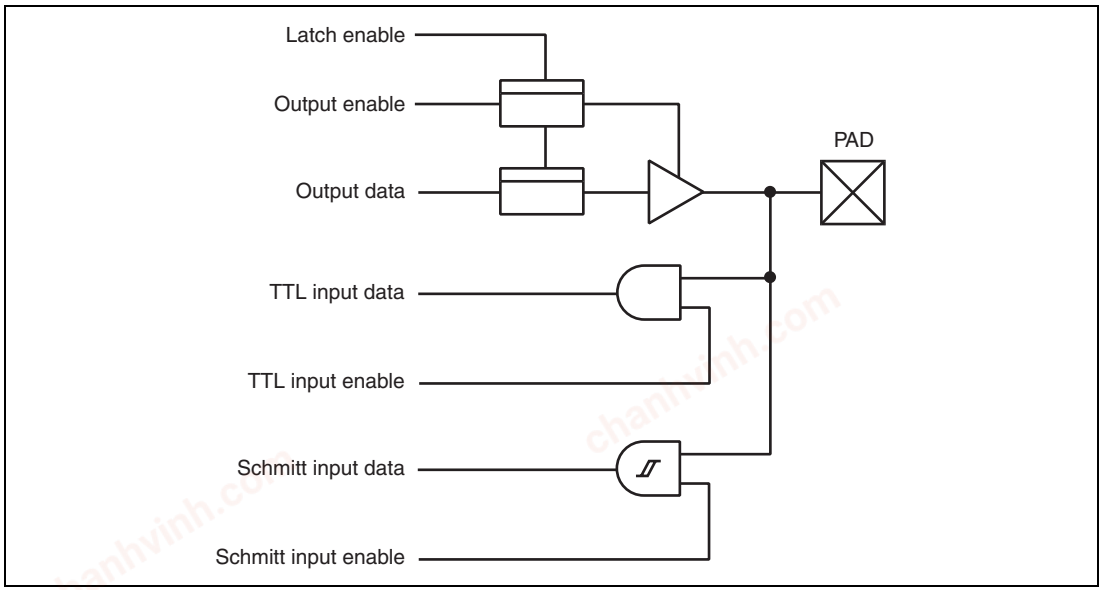

Figure 1.3 (8) Simplified Circuit Diagram (Bidirectional Buffer, TTL AND Input, Schmitt AND Input, with Latch)

chanhvinh.com

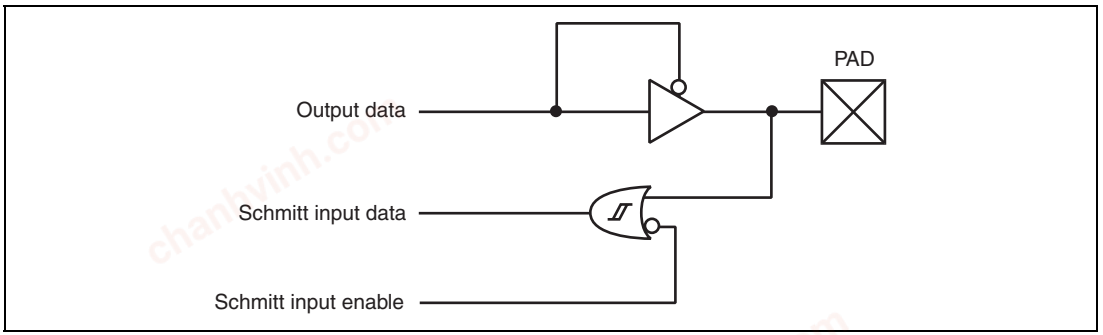

Figure 1.3 (9) Simplified Circuit Diagram (Open Drain Output and Schmitt OR Input Buffer)

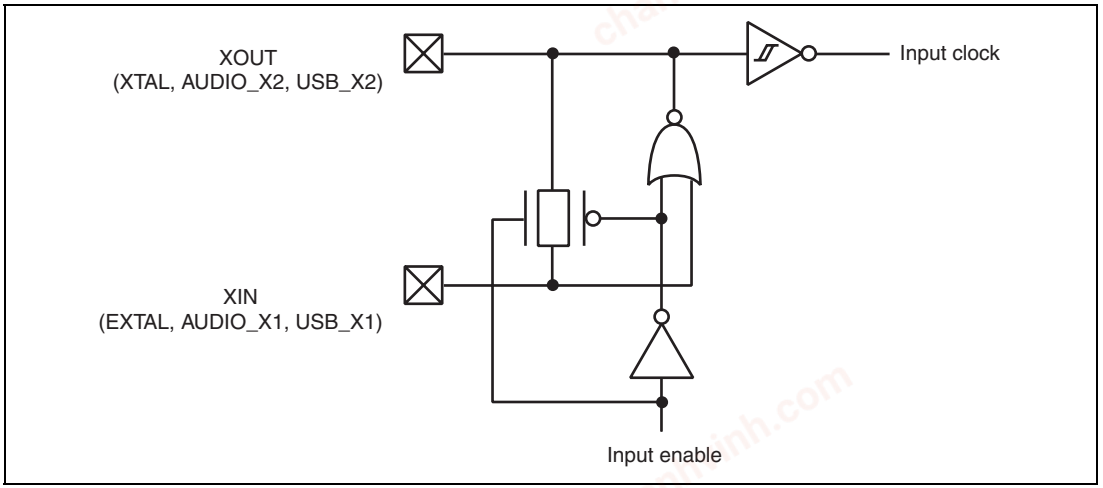

Figure 1.3 (10) Simplified Circuit Diagram (Oscillation Buffer 1)

chanhvinh.com

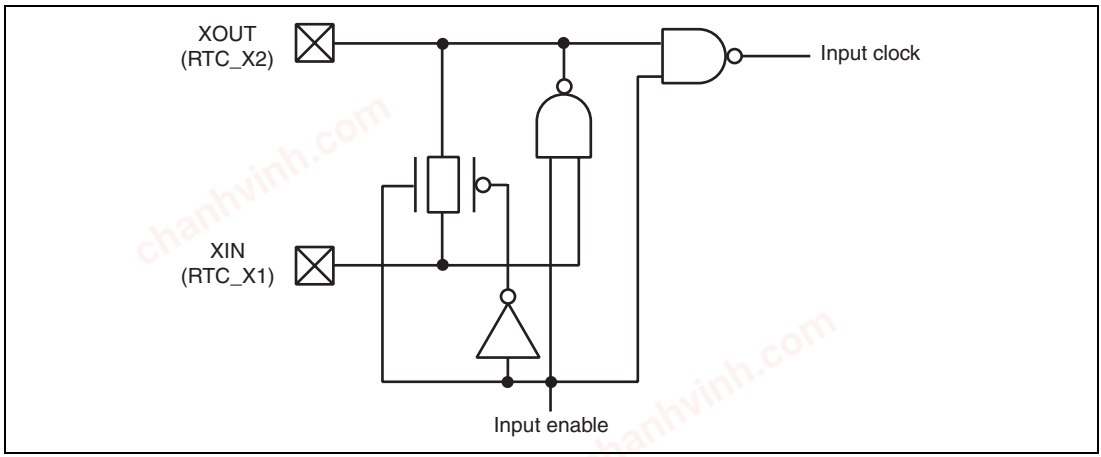

Figure 1.3 (11) Simplified Circuit Diagram (Oscillation Buffer 2)

chanhvinh.com

chanhvinh.com
chanhvinh.com
chanhvinh.com
chanhvinh.com

chanhvinh.com

Section 2 CPU

2.1 Register Configuration

The register set consists of sixteen 32-bit general registers, four 32-bit control registers, and four 32-bit system registers.

2.1.1 General Registers

Figure 2.1 shows the general registers.

The sixteen 32-bit general registers are numbered R0 to R15. General registers are used for data processing and address calculation. R0 is also used as an index register. Several instructions have R0 fixed as their only usable register. R15 is used as the hardware stack pointer (SP). Saving and restoring the status register (SR) and program counter (PC) in exception handling is accomplished by referencing the stack using R15.



Notes: 1. R0 functions as an index register in the indexed register indirect addressing mode and indexed GBR indirect addressing mode. In some instructions, R0 functions as a fixed source register or destination register.
2. R15 functions as a hardware stack pointer (SP) during exception processing.

Figure 2.1 General Registers

chanhvinh.com

2.1.2 Control Registers

The control registers consist of four 32-bit registers: the status register (SR), the global base register (GBR), the vector base register (VBR), and the jump table base register (TBR).

The status register indicates instruction processing states.

The global base register functions as a base address for the GBR indirect addressing mode to transfer data to the registers of on-chip peripheral modules.

The vector base register functions as the base address of the exception handling vector area (including interrupts).

The jump table base register functions as the base address of the function table area.

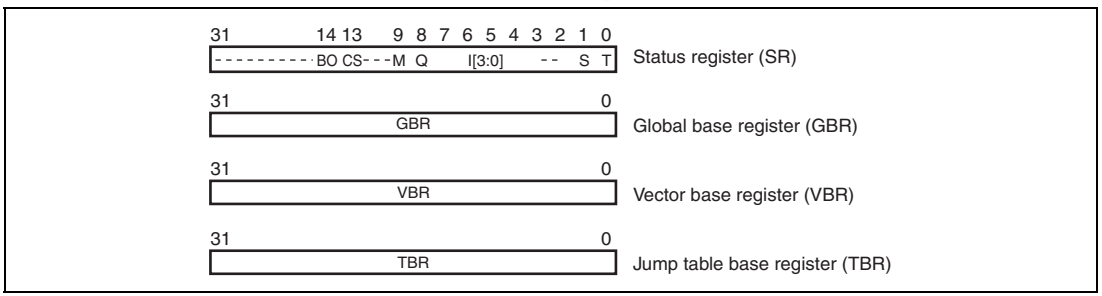

Figure 2.2 Control Registers

(1) Status Register (SR)

Bit:	31	30	29	28	27	26	25	24	23	22	21	20	19	18	17	16
	-	-	-	-	-	-	-	-	-	-	-	-	-	-	-	-
Initial value:	0	0	0	0	0	0	0	0	0	0	0	0	0	0	0	0
R/W:	R	R	R	R	R	R	R	R	R	R	R	R	R	R	R	R

Bit:	15	14	13	12	11	10	9	8	7	6	5	4	3	2	1	0
	-	BO	CS	-	-	-	M	Q	I[3:0]				-	-	S	T
Initial value:	0	0	0	0	0	0	-	-	1	1	1	1	0	0	-	-
R/W:	R	R/W	R/W	R	R	R	R/W	R/W	R/W	R/W	R/W	R/W	R	R	R/W	R/W

chanhvinh.com

Bit	Bit Name	Initial Value	R/W	Description
31 to 15	—	All 0	R	Reserved These bits are always read as 0. The write value should always be 0.
14	BO	0	R/W	BO Bit Indicates that a register bank has overflowed.
13	CS	0	R/W	CS Bit Indicates that, in CLIP instruction execution, the value has exceeded the saturation upper-limit value or fallen below the saturation lower-limit value.
12 to 10	—	All 0	R	Reserved These bits are always read as 0. The write value should always be 0.
9	M	—	R/W	M Bit
8	Q	—	R/W	Q Bit Used by the DIV0S, DIV0U, and DIV1 instructions.
7 to 4	I[3:0]	1111	R/W	Interrupt Mask Level
3, 2	—	All 0	R	Reserved These bits are always read as 0. The write value should always be 0.
1	S	—	R/W	S Bit Specifies a saturation operation for a MAC instruction.
0	T	—	R/W	T Bit True/false condition or carry/borrow bit

(2) Global Base Register (GBR)

GBR is referenced as the base address in a GBR-referencing MOV instruction.

(3) Vector Base Register (VBR)

VBR is referenced as the branch destination base address in the event of an exception or an interrupt.

(4) Jump Table Base Register (TBR)

TBR is referenced as the start address of a function table located in memory in a JSR/N@@(disp8,TBR) table-referencing subroutine call instruction.

chanhvinh.com

2.1.3 System Registers

The system registers consist of four 32-bit registers: the high and low multiply and accumulate registers (MACH and MACL), the procedure register (PR), and the program counter (PC). MACH and MACL store the results of multiply or multiply and accumulate operations. PR stores the return address from a subroutine procedure. PC points four bytes ahead of the current instruction and controls the flow of the processing.

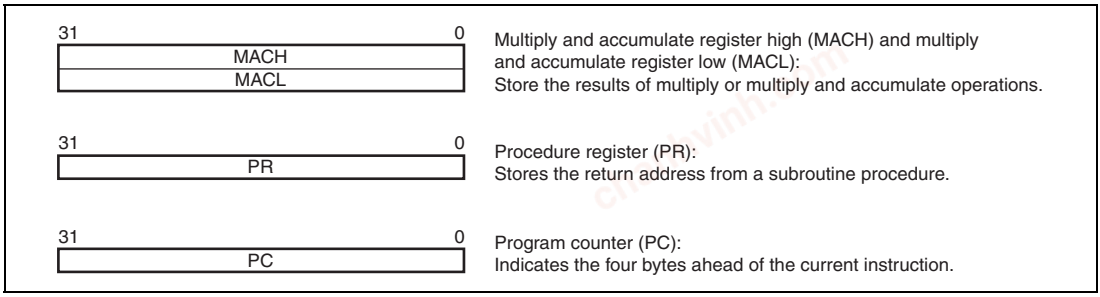

Figure 2.3 System Registers

(1) Multiply and Accumulate Register High (MACH) and Multiply and Accumulate Register Low (MACL)

MACH and MACL are used as the addition value in a MAC instruction, and store the result of a MAC or MUL instruction.

(2) Procedure Register (PR)

PR stores the return address of a subroutine call using a BSR, BSRF, or JSR instruction, and is referenced by a subroutine return instruction (RTS).

(3) Program Counter (PC)

PC points four bytes ahead of the instruction being executed.

chanhvinh.com

2.1.4 Register Banks

For the nineteen 32-bit registers comprising general registers R0 to R14, control register GBR, and system registers MACH, MACL, and PR, high-speed register saving and restoration can be carried out using a register bank. The register contents are automatically saved in the bank after the CPU accepts an interrupt that uses a register bank. Restoration from the bank is executed by issuing a RESBANK instruction in an interrupt processing routine.

This LSI has 15 banks. For details, see the SH-2A, SH2A-FPU Software Manual and section 7.8, Register Banks.

2.1.5 Initial Values of Registers

Table 2.1 lists the values of the registers after a reset.

Table 2.1 Initial Values of Registers

Classification	Register	Initial Value
General registers	R0 to R14	Undefined
	R15 (SP)	Value of the stack pointer in the vector address table
Control registers	SR	Bits I[3:0] are 1111 (H'F), BO and CS are 0, reserved bits are 0, and other bits are undefined
	GBR, TBR	Undefined
	VBR	H'00000000
System registers	MACH, MACL, PR	Undefined
	PC	Value of the program counter in the vector address table

chanhvinh.com

2.2 Data Formats

2.2.1 Data Format in Registers

Register operands are always longwords (32 bits). If the size of memory operand is a byte (8 bits) or a word (16 bits), it is changed into a longword by expanding the sign-part when loaded into a register.

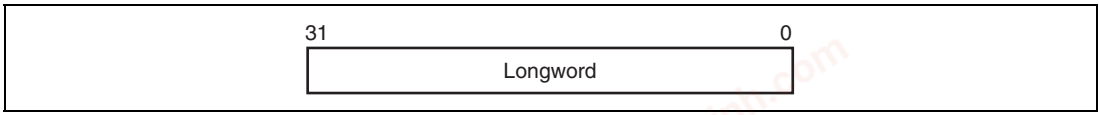

Figure 2.4 Data Format in Registers

2.2.2 Data Formats in Memory

Memory data formats are classified into bytes, words, and longwords. Memory can be accessed in 8-bit bytes, 16-bit words, or 32-bit longwords. A memory operand of fewer than 32 bits is stored in a register in sign-extended or zero-extended form.

A word operand should be accessed at a word boundary (an even address of multiple of two bytes: address 2n), and a longword operand at a longword boundary (an even address of multiple of four bytes: address 4n). Otherwise, an address error will occur. A byte operand can be accessed at any address.

Only big-endian byte order can be selected for the data format.

Data formats in memory are shown in figure 2.5.

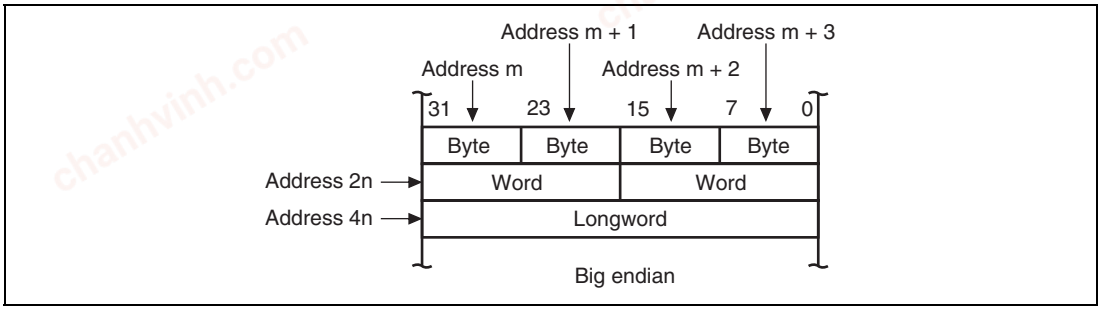

Figure 2.5 Data Formats in Memory

chanhvinh.com

2.2.3 Immediate Data Format

Byte (8-bit) immediate data is located in an instruction code. Immediate data accessed by the MOV, ADD, and CMP/EQ instructions is sign-extended and handled in registers as longword data. Immediate data accessed by the TST, AND, OR, and XOR instructions is zero-extended and handled as longword data. Consequently, AND instructions with immediate data always clear the upper 24 bits of the destination register.

20-bit immediate data is located in the code of a MOVI20 or MOVI20S 32-bit transfer instruction. The MOVI20 instruction stores immediate data in the destination register in sign-extended form. The MOVI20S instruction shifts immediate data by eight bits in the upper direction, and stores it in the destination register in sign-extended form.

Word or longword immediate data is not located in the instruction code, but rather is stored in a memory table. The memory table is accessed by an immediate data transfer instruction (MOV) using the PC relative addressing mode with displacement.

See examples given in section 2.3.1 (10), Immediate Data.

chanhvinh.com

2.3 Instruction Features

2.3.1 RISC-Type Instruction Set

Instructions are RISC type. This section details their functions.

(1) 16-Bit Fixed-Length Instructions

Basic instructions have a fixed length of 16 bits, improving program code efficiency.

(2) 32-Bit Fixed-Length Instructions

The SH-2A additionally features 32-bit fixed-length instructions, improving performance and ease of use.

(3) One Instruction per State

Each basic instruction can be executed in one cycle using the pipeline system.

(4) Data Length

Longword is the standard data length for all operations. Memory can be accessed in bytes, words, or longwords. Byte or word data in memory is sign-extended and handled as longword data. Immediate data is sign-extended for arithmetic operations or zero-extended for logic operations. It is also handled as longword data.

Table 2.2 Sign Extension of Word Data

SH2-A CPU		Description	Example of Other CPU	
MOV.W	@(disp,PC),R1	Data is sign-extended to 32 bits, and R1 becomes H'00001234. It is next operated upon by an ADD instruction.	ADD.W	#H'1234,R0
ADD	R1,R0			
	.....			
.DATA.W	H'1234			

Note: @(disp, PC) accesses the immediate data.

(5) Load-Store Architecture

Basic operations are executed between registers. For operations that involve memory access, data is loaded to the registers and executed (load-store architecture). Instructions such as AND that manipulate bits, however, are executed directly in memory.

chanhvinh.com

(6) Delayed Branch Instructions

With the exception of some instructions, unconditional branch instructions, etc., are executed as delayed branch instructions. With a delayed branch instruction, the branch is taken after execution of the instruction immediately following the delayed branch instruction. This reduces disturbance of the pipeline control when a branch is taken.

In a delayed branch, the actual branch operation occurs after execution of the slot instruction. However, instruction execution such as register updating excluding the actual branch operation, is performed in the order of delayed branch instruction → delay slot instruction. For example, even though the contents of the register holding the branch destination address are changed in the delay slot, the branch destination address remains as the register contents prior to the change.

Table 2.3 Delayed Branch Instructions

SH-2A CPU		Description	Example of Other CPU	
BRA	TRGET	Executes the ADD before branching to TRGET.	ADD.W	R1,R0
ADD	R1,R0		BRA	TRGET

(7) Unconditional Branch Instructions with No Delay Slot

The SH-2A additionally features unconditional branch instructions in which a delay slot instruction is not executed. This eliminates unnecessary NOP instructions, and so reduces the code size.

(8) Multiply/Multiply-and-Accumulate Operations

16-bit × 16-bit → 32-bit multiply operations are executed in one to two cycles. 16-bit × 16-bit + 64-bit → 64-bit multiply-and-accumulate operations are executed in two to three cycles. 32-bit × 32-bit → 64-bit multiply and 32-bit × 32-bit + 64-bit → 64-bit multiply-and-accumulate operations are executed in two to four cycles.

(9) T Bit

The T bit in the status register (SR) changes according to the result of the comparison. Whether a conditional branch is taken or not taken depends upon the T bit condition (true/false). The number of instructions that change the T bit is kept to a minimum to improve the processing speed.

chanhvinh.com

Table 2.4 T Bit

SH-2A CPU		Description	Example of Other CPU	
CMP/GE	R1,R0	T bit is set when R0 ≥ R1.	CMP.W	R1,R0
BT	TRGET0	The program branches to TRGET0 when R0 ≥ R1 and to TRGET1 when R0 < R1.	BGE	TRGET0
BF	TRGET1		BLT	TRGET1
ADD	#–1,R0	T bit is not changed by ADD.	SUB.W	#1,R0
CMP/EQ	#0,R0	T bit is set when R0 = 0.	BEQ	TRGET
BT	TRGET	The program branches if R0 = 0.		

(10) Immediate Data

Byte immediate data is located in an instruction code. Word or longword immediate data is not located in instruction codes but in a memory table. The memory table is accessed by an immediate data transfer instruction (MOV) using the PC relative addressing mode with displacement.

With the SH-2A, 17- to 28-bit immediate data can be located in an instruction code. However, for 21- to 28-bit immediate data, an OR instruction must be executed after the data is transferred to a register.

Table 2.5 Immediate Data Accessing

Classification	SH-2A CPU		Example of Other CPU	
8-bit immediate	MOV	#H'12,R0	MOV.B	#H'12,R0
16-bit immediate	MOVI20	#H'1234,R0	MOV.W	#H'1234,R0
20-bit immediate	MOVI20	#H'12345,R0	MOV.L	#H'12345,R0
28-bit immediate	MOVI20S	#H'12345,R0	MOV.L	#H'1234567,R0
	OR	#H'67,R0		
32-bit immediate	MOV.L	@(disp,PC),R0	MOV.L	#H'12345678,R0
		.....		
	.DATA.L	H'12345678		

Note: @(disp, PC) accesses the immediate data.

chanhvinh.com

(11) Absolute Address

When data is accessed by an absolute address, the absolute address value should be placed in the memory table in advance. That value is transferred to the register by loading the immediate data during the execution of the instruction, and the data is accessed in register indirect addressing mode.

With the SH-2A, when data is referenced using an absolute address not exceeding 28 bits, it is also possible to transfer immediate data located in the instruction code to a register and to reference the data in register indirect addressing mode. However, when referencing data using an absolute address of 21 to 28 bits, an OR instruction must be used after the data is transferred to a register.

Table 2.6 Absolute Address Accessing

Classification	SH-2A CPU		Example of Other CPU	
Up to 20 bits	MOVI20	#H'12345,R1	MOV.B	@H'12345,R0
	MOV.B	@R1,R0		
21 to 28 bits	MOVI20S	#H'12345,R1	MOV.B	@H'1234567,R0
	OR	#H'67,R1		
	MOV.B	@R1,R0		
29 bits or more	MOV.L	@(disp,PC),R1	MOV.B	@H'12345678,R0
	MOV.B	@R1,R0		
		.....		
	.DATA.L	H'12345678		

(12) 16-Bit/32-Bit Displacement

When data is accessed by 16-bit or 32-bit displacement, the displacement value should be placed in the memory table in advance. That value is transferred to the register by loading the immediate data during the execution of the instruction, and the data is accessed in the indexed indirect register addressing mode.

Table 2.7 Displacement Accessing

Classification	SH-2A CPU		Example of Other CPU	
16-bit displacement	MOV.W	@(disp,PC),R0	MOV.W	@(H'1234,R1),R2
	MOV.W	@(R0,R1),R2		
		.....		
	.DATA.W	H'1234		

chanhvinh.com

2.3.2 Addressing Modes

Addressing modes and effective address calculation are as follows:

Table 2.8 Addressing Modes and Effective Addresses

Addressing Mode	Instruction Format	Effective Address Calculation	Equation
Register direct	`Rn`	The effective address is register Rn. (The operand is the contents of register Rn.)	—
Register indirect	`@Rn`	The effective address is the contents of register Rn. 	Rn
Register indirect with post-increment	`@Rn+`	The effective address is the contents of register Rn. A constant is added to the contents of Rn after the instruction is executed. 1 is added for a byte operation, 2 for a word operation, and 4 for a longword operation. 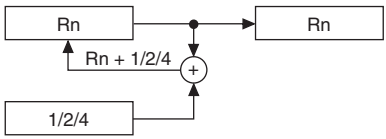	Rn (After instruction execution) Byte: Rn + 1 → Rn Word: Rn + 2 → Rn Longword: Rn + 4 → Rn
Register indirect with pre-decrement	`@-Rn`	The effective address is the value obtained by subtracting a constant from Rn. 1 is subtracted for a byte operation, 2 for a word operation, and 4 for a longword operation. 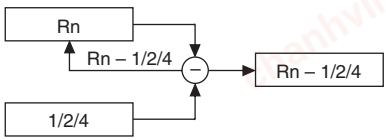	Byte: Rn – 1 → Rn Word: Rn – 2 → Rn Longword: Rn – 4 → Rn (Instruction is executed with Rn after this calculation)

chanhvinh.com

Addressing Mode	Instruction Format	Effective Address Calculation	Equation
Register indirect with displacement	@(disp:4, Rn)	The effective address is the sum of Rn and a 4-bit displacement (disp). The value of disp is zero-extended, and remains unchanged for a byte operation, is doubled for a word operation, and is quadrupled for a longword operation. 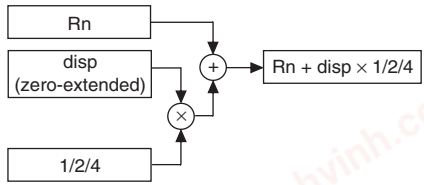	Byte: Rn + disp Word: Rn + disp × 2 Longword: Rn + disp × 4
Register indirect with displacement	@(disp:12, Rn)	The effective address is the sum of Rn and a 12-bit displacement (disp). The value of disp is zero-extended. 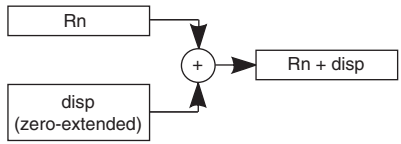	Byte: Rn + disp Word: Rn + disp Longword: Rn + disp
Indexed register indirect	@(R0,Rn)	The effective address is the sum of Rn and R0. 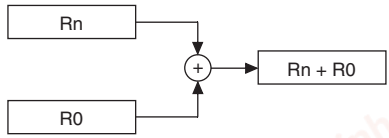	Rn + R0
GBR indirect with displacement	@(disp:8, GBR)	The effective address is the sum of GBR value and an 8-bit displacement (disp). The value of disp is zero-extended, and remains unchanged for a byte operation, is doubled for a word operation, and is quadrupled for a longword operation. 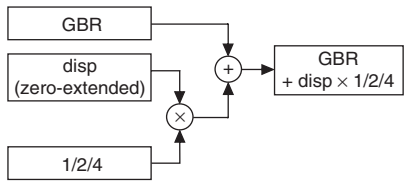	Byte: GBR + disp Word: GBR + disp × 2 Longword: GBR + disp × 4

chanhvinh.com

Addressing Mode	Instruction Format	Effective Address Calculation	Equation
Indexed GBR indirect	@(R0, GBR)	The effective address is the sum of GBR value and R0. 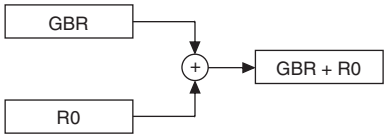	GBR + R0
TBR duplicate indirect with displacement	@@ (disp:8, TBR)	The effective address is the sum of TBR value and an 8-bit displacement (disp). The value of disp is zero-extended, and is multiplied by 4. 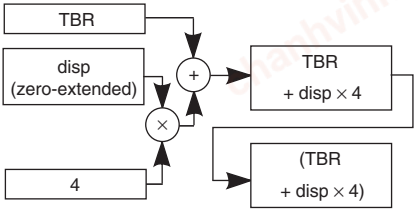	Contents of address (TBR + disp × 4)
PC indirect with displacement	@(disp:8, PC)	The effective address is the sum of PC value and an 8-bit displacement (disp). The value of disp is zero-extended, and is doubled for a word operation, and quadrupled for a longword operation. For a longword operation, the lowest two bits of the PC value are masked. 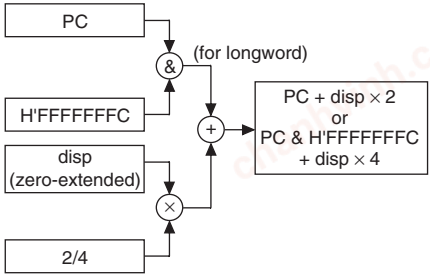	Word: PC + disp × 2 Longword: PC & H'FFFFFFFC + disp × 4

chanhvinh.com

Addressing Mode	Instruction Format	Effective Address Calculation	Equation
PC relative	`disp:8`	The effective address is the sum of PC value and the value that is obtained by doubling the sign-extended 8-bit displacement (disp). 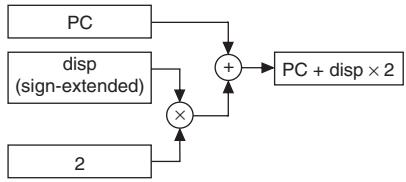	PC + disp × 2
	`disp:12`	The effective address is the sum of PC value and the value that is obtained by doubling the sign-extended 12-bit displacement (disp). 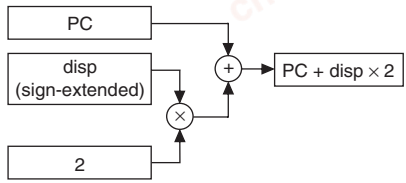	PC + disp × 2
	`Rn`	The effective address is the sum of PC value and Rn. 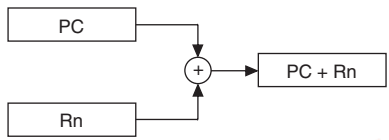	PC + Rn

chanhvinh.com

Addressing Mode	Instruction Format	Effective Address Calculation	Equation
Immediate	#imm:20	The 20-bit immediate data (imm) for the MOVI20 instruction is sign-extended. 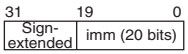	—
		The 20-bit immediate data (imm) for the MOVI20S instruction is shifted by eight bits to the left, the upper bits are sign-extended, and the lower bits are padded with zero. 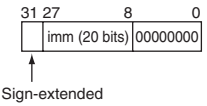	—
	#imm:8	The 8-bit immediate data (imm) for the TST, AND, OR, and XOR instructions is zero-extended.	—
	#imm:8	The 8-bit immediate data (imm) for the MOV, ADD, and CMP/EQ instructions is sign-extended.	—
	#imm:8	The 8-bit immediate data (imm) for the TRAPA instruction is zero-extended and then quadrupled.	—
	#imm:3	The 3-bit immediate data (imm) for the BAND, BOR, BXOR, BST, BLD, BSET, and BCLR instructions indicates the target bit location.	—

chanhvinh.com

2.3.3 Instruction Format

The instruction formats and the meaning of source and destination operands are described below. The meaning of the operand depends on the instruction code. The symbols used are as follows:

- xxxx: Instruction code
- mmmm: Source register
- nnnn: Destination register
- iiii: Immediate data
- dddd: Displacement

Table 2.9 Instruction Formats

Instruction Formats	Source Operand	Destination Operand	Example
0 format 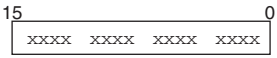	—	—	`NOP`
n format 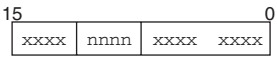	—	nnnn: Register direct	`MOVT Rn`
	Control register or system register	nnnn: Register direct	`STS MACH,Rn`
	R0 (Register direct)	nnnn: Register direct	`DIVU R0,Rn`
	Control register or system register	nnnn: Register indirect with pre-decrement	`STC.L SR,@-Rn`
	mmmm: Register direct	R15 (Register indirect with pre-decrement)	`MOVMU.L Rm,@-R15`
	R15 (Register indirect with post-increment)	nnnn: Register direct	`MOVMU.L @R15+,Rn`
	R0 (Register direct)	nnnn: (Register indirect with post-increment)	`MOV.L R0,@Rn+`

chanhvinh.com

Instruction Formats	Source Operand	Destination Operand	Example
m format 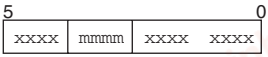	mmmm: Register direct	Control register or system register	LDC Rm,SR
	mmmm: Register indirect with post-increment	Control register or system register	LDC.L @Rm+,SR
	mmmm: Register indirect	—	JMP @Rm
	mmmm: Register indirect with pre-decrement	R0 (Register direct)	MOV.L @-Rm,R0
	mmmm: PC relative using Rm	—	BRAF Rm
nm format 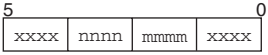	mmmm: Register direct	nnnn: Register direct	ADD Rm,Rn
	mmmm: Register direct	nnnn: Register indirect	MOV.L Rm,@Rn
	mmmm: Register indirect with post-increment (multiply-and-accumulate) nnnn*: Register indirect with post-increment (multiply-and-accumulate)	MACH, MACL	MAC.W @Rm+,@Rn+
	mmmm: Register indirect with post-increment	nnnn: Register direct	MOV.L @Rm+,Rn
	mmmm: Register direct	nnnn: Register indirect with pre-decrement	MOV.L Rm,@-Rn
	mmmm: Register direct	nnnn: Indexed register indirect	MOV.L Rm,@(R0,Rn)
md format 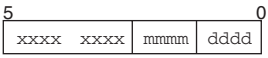	mmmmdddd: Register indirect with displacement	R0 (Register direct)	MOV.B @(disp,Rm),R0

chanhvinh.com

Instruction Formats	Source Operand	Destination Operand	Example
nd4 format 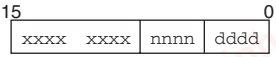	R0 (Register direct)	nnnndddd: Register indirect with displacement	MOV.B R0,@(disp,Rn)
nmd format 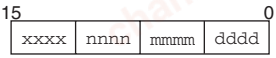	mmmm: Register direct	nnnndddd: Register indirect with displacement	MOV.L Rm,@(disp,Rn)
	mmmmdddd: Register indirect with displacement	nnnn: Register direct	MOV.L @(disp,Rm),Rn
nmd12 format 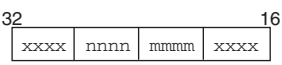 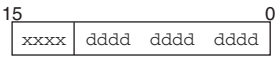	mmmm: Register direct	nnnndddd: Register indirect with displacement	MOV.L Rm,@(disp12,Rn)
	mmmmdddd: Register indirect with displacement	nnnn: Register direct	MOV.L @(disp12,Rm),Rn
d format 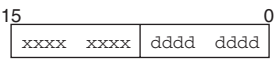	dddddddd: GBR indirect with displacement	R0 (Register direct)	MOV.L @(disp,GBR),R0
	R0 (Register direct)	dddddddd: GBR indirect with displacement	MOV.L R0,@(disp,GBR)
	dddddddd: PC relative with displacement	R0 (Register direct)	MOVA @(disp,PC),R0
	dddddddd: TBR duplicate indirect with displacement	—	JSR/N @@(disp8,TBR)
	dddddddd: PC relative	—	BF label
d12 format 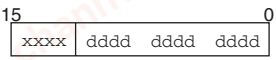	dddddddddddd: PC relative	—	BRA label (label = disp + PC)
nd8 format 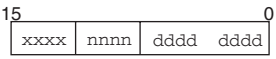	dddddddd: PC relative with displacement	nnnn: Register direct	MOV.L @(disp,PC),Rn

chanhvinh.com

Instruction Formats	Source Operand	Destination Operand	Example
i format 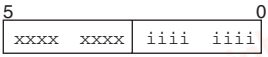	iiiiiiii: Immediate	Indexed GBR indirect	AND.B #imm,@(R0,GBR)
	iiiiiiii: Immediate	R0 (Register direct)	AND #imm,R0
	iiiiiiii: Immediate	—	TRAPA #imm
ni format 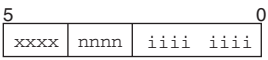	iiiiiiii: Immediate	nnnn: Register direct	ADD #imm,Rn
ni3 format 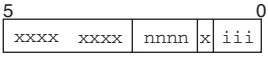	nnnn: Register direct iii: Immediate	—	BLD #imm3,Rn
	—	nnnn: Register direct iii: Immediate	BST #imm3,Rn
ni20 format 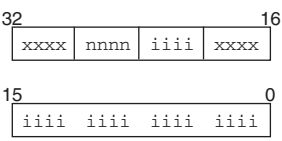	iiiiiiiiiiiiiiii: Immediate	nnnn: Register direct	MOVI20 #imm20, Rn
nid format 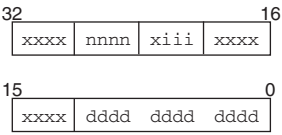	nnnndddddddddddd: Register indirect with displacement iii: Immediate	—	BLD.B #imm3,@(disp12,Rn)
	—	nnnndddddddddddd: Register indirect with displacement iii: Immediate	BST.B #imm3,@(disp12,Rn)

Note: * In multiply-and-accumulate instructions, nnnn is the source register.

chanhvinh.com

2.4 Instruction Set

2.4.1 Instruction Set by Classification

Table 2.10 lists the instructions according to their classification.

Table 2.10 Classification of Instructions

Classification	Types	Operation Code	Function	No. of Instructions
Data transfer	13	MOV	Data transfer Immediate data transfer Peripheral module data transfer Structure data transfer Reverse stack transfer	62
		MOVA	Effective address transfer	
		MOVI20	20-bit immediate data transfer	
		MOVI20S	20-bit immediate data transfer 8-bit left-shit	
		MOVML	R0–Rn register save/restore	
		MOVMU	Rn–R14 and PR register save/restore	
		MOVRT	T bit inversion and transfer to Rn	
		MOVT	T bit transfer	
		MOVU	Unsigned data transfer	
		NOTT	T bit inversion	
		PREF	Prefetch to operand cache	
		SWAP	Swap of upper and lower bytes	
		XTRCT	Extraction of the middle of registers connected	

chanhvinh.com

Classification	Types	Operation Code	Function	No. of Instructions
Arithmetic operations	26	ADD	Binary addition	40
		ADDC	Binary addition with carry	
		ADDV	Binary addition with overflow check	
		CMP/cond	Comparison	
		CLIPS	Signed saturation value comparison	
		CLIPU	Unsigned saturation value comparison	
		DIVS	Signed division (32 ÷ 32)	
		DIVU	Unsigned division (32 ÷ 32)	
		DIV1	One-step division	
		DIV0S	Initialization of signed one-step division	
		DIV0U	Initialization of unsigned one-step division	
		DMULS	Signed double-precision multiplication	
		DMULU	Unsigned double-precision multiplication	
		DT	Decrement and test	
		EXTS	Sign extension	
		EXTU	Zero extension	
		MAC	Multiply-and-accumulate, double-precision multiply-and-accumulate operation	
		MUL	Double-precision multiply operation	
		MULR	Signed multiplication with result storage in Rn	
		MULS	Signed multiplication	
		MULU	Unsigned multiplication	
		NEG	Negation	
		NEGC	Negation with borrow	
		SUB	Binary subtraction	
		SUBC	Binary subtraction with borrow	
		SUBV	Binary subtraction with underflow	

chanhvinh.com

Classification	Types	Operation Code	Function	No. of Instructions
Logic operations	6	AND	Logical AND	14
		NOT	Bit inversion	
		OR	Logical OR	
		TAS	Memory test and bit set	
		TST	Logical AND and T bit set	
		XOR	Exclusive OR	
Shift	12	ROTL	One-bit left rotation	16
		ROTR	One-bit right rotation	
		ROTCL	One-bit left rotation with T bit	
		ROTCR	One-bit right rotation with T bit	
		SHAD	Dynamic arithmetic shift	
		SHAL	One-bit arithmetic left shift	
		SHAR	One-bit arithmetic right shift	
		SHLD	Dynamic logical shift	
		SHLL	One-bit logical left shift	
		SHLLn	n-bit logical left shift	
		SHLR	One-bit logical right shift	
		SHLRn	n-bit logical right shift	
Branch	10	BF	Conditional branch, conditional delayed branch (branch when T = 0)	15
		BT	Conditional branch, conditional delayed branch (branch when T = 1)	
		BRA	Unconditional delayed branch	
		BRAF	Unconditional delayed branch	
		BSR	Delayed branch to subroutine procedure	
		BSRF	Delayed branch to subroutine procedure	
		JMP	Unconditional delayed branch	
		JSR	Branch to subroutine procedure Delayed branch to subroutine procedure	
		RTS	Return from subroutine procedure Delayed return from subroutine procedure	
		RTV/N	Return from subroutine procedure with Rm → R0 transfer	

chanhvinh.com

Classification	Types	Operation Code	Function	No. of Instructions
System control	14	CLRT	T bit clear	36
		CLRMAC	MAC register clear	
		LDBANK	Register restoration from specified register bank entry	
		LDC	Load to control register	
		LDS	Load to system register	
		NOP	No operation	
		RESBANK	Register restoration from register bank	
		RTE	Return from exception handling	
		SETT	T bit set	
		SLEEP	Transition to power-down mode	
		STBANK	Register save to specified register bank entry	
		STC	Store control register data	
		STS	Store system register data	
		TRAPA	Trap exception handling	
Floating-point instructions	19	FABS	Floating-point absolute value	48
		FADD	Floating-point addition	
		FCMP	Floating-point comparison	
		FCNVDS	Conversion from double-precision to single-precision	
		FCNVSD	Conversion from single-precision to double - precision	
		FDIV	Floating-point division	
		FLDI0	Floating-point load immediate 0	
		FLDI1	Floating-point load immediate 1	
		FLDS	Floating-point load into system register FPUL	
		FLOAT	Conversion from integer to floating-point	
		FMAC	Floating-point multiply and accumulate operation	
		FMOV	Floating-point data transfer	
		FMUL	Floating-point multiplication	
		FNEG	Floating-point sign inversion	

chanhvinh.com

Classification	Types	Operation Code	Function	No. of Instructions
Floating-point instructions	19	FSCHG	SZ bit inversion	48
		FSQRT	Floating-point square root	
		FSTS	Floating-point store from system register FPUL	
		FSUB	Floating-point subtraction	
		FTRC	Floating-point conversion with rounding to integer	
FPU-related CPU instructions	2	LDS	Load into floating-point system register	8
		STS	Store from floating-point system register	
Bit manipulation	10	BAND	Bit AND	14
		BCLR	Bit clear	
		BLD	Bit load	
		BOR	Bit OR	
		BSET	Bit set	
		BST	Bit store	
		BXOR	Bit exclusive OR	
		BANDNOT	Bit NOT AND	
		BORNOT	Bit NOT OR	
		BLDNOT	Bit NOT load	
Total:	112			253

chanhvinh.com

The table below shows the format of instruction codes, operation, and execution states. They are described by using this format according to their classification.

Instruction	Instruction Code	Operation	Execution States	T Bit
Indicated by mnemonic.	Indicated in MSB ↔ LSB order.	Indicates summary of operation.	Value when no wait states are inserted.*1	Value of T bit after instruction is executed.
[Legend] Rm: Source register Rn: Destination register imm: Immediate data disp: Displacement*2	[Legend] mmmm: Source register nnnn: Destination register 0000: R0 0001: R1 ..... 1111: R15 iiii: Immediate data dddd: Displacement	[Legend] →, ←: Transfer direction (xx): Memory operand M/Q/T: Flag bits in SR &: Logical AND of each bit |: Logical OR of each bit ^: Exclusive logical OR of each bit ~: Logical NOT of each bit <<n: n-bit left shift >>n: n-bit right shift		Explanation of Symbols —: No change

Notes: 1. Instruction execution cycles: The execution cycles shown in the table are minimums. In practice, the number of instruction execution states will be increased in cases such as the following:

a. When there is a conflict between an instruction fetch and a data access

b. When the destination register of a load instruction (memory → register) is the same as the register used by the next instruction.

2. Depending on the operand size, displacement is scaled by ×1, ×2, or ×4. For details, refer to the SH-2A, SH2A-FPU Software Manual.

chanhvinh.com

2.4.2 Data Transfer Instructions

Table 2.11 Data Transfer Instructions

Instruction		Instruction Code	Operation	Execution Cycles	T Bit	Compatibility SH2, SH2E	SH4	SH-2A
MOV	#imm,Rn	1110nnnniiiiiiii	imm → sign extension → Rn	1	—	Yes	Yes	Yes
MOV.W	@(disp,PC),Rn	1001nnnnddddddd	(disp × 2 + PC) → sign extension → Rn	1	—	Yes	Yes	Yes
MOV.L	@(disp,PC),Rn	1101nnnnddddddd	(disp × 4 + PC) → Rn	1	—	Yes	Yes	Yes
MOV	Rm,Rn	0110nnnnmmmm0011	Rm → Rn	1	—	Yes	Yes	Yes
MOV.B	Rm,@Rn	0010nnnnmmmm0000	Rm → (Rn)	1	—	Yes	Yes	Yes
MOV.W	Rm,@Rn	0010nnnnmmmm0001	Rm → (Rn)	1	—	Yes	Yes	Yes
MOV.L	Rm,@Rn	0010nnnnmmmm0010	Rm → (Rn)	1	—	Yes	Yes	Yes
MOV.B	@Rm,Rn	0110nnnnmmmm0000	(Rm) → sign extension → Rn	1	—	Yes	Yes	Yes
MOV.W	@Rm,Rn	0110nnnnmmmm0001	(Rm) → sign extension → Rn	1	—	Yes	Yes	Yes
MOV.L	@Rm,Rn	0110nnnnmmmm0010	(Rm) → Rn	1	—	Yes	Yes	Yes
MOV.B	Rm,@-Rn	0010nnnnmmmm0100	Rn-1 → Rn, Rm → (Rn)	1	—	Yes	Yes	Yes
MOV.W	Rm,@-Rn	0010nnnnmmmm0101	Rn-2 → Rn, Rm → (Rn)	1	—	Yes	Yes	Yes
MOV.L	Rm,@-Rn	0010nnnnmmmm0110	Rn-4 → Rn, Rm → (Rn)	1	—	Yes	Yes	Yes
MOV.B	@Rm+,Rn	0110nnnnmmmm0100	(Rm) → sign extension → Rn, Rm + 1 → Rm	1	—	Yes	Yes	Yes
MOV.W	@Rm+,Rn	0110nnnnmmmm0101	(Rm) → sign extension → Rn, Rm + 2 → Rm	1	—	Yes	Yes	Yes
MOV.L	@Rm+,Rn	0110nnnnmmmm0110	(Rm) → Rn, Rm + 4 → Rm	1	—	Yes	Yes	Yes
MOV.B	R0,@(disp,Rn)	10000000nnnndddd	R0 → (disp + Rn)	1	—	Yes	Yes	Yes
MOV.W	R0,@(disp,Rn)	10000001nnnndddd	R0 → (disp × 2 + Rn)	1	—	Yes	Yes	Yes
MOV.L	Rm,@(disp,Rn)	0001nnnnmmmmdddd	Rm → (disp × 4 + Rn)	1	—	Yes	Yes	Yes
MOV.B	@(disp,Rm),R0	10000100mmmmdddd	(disp + Rm) → sign extension → R0	1	—	Yes	Yes	Yes
MOV.W	@(disp,Rm),R0	10000101mmmmdddd	(disp × 2 + Rm) → sign extension → R0	1	—	Yes	Yes	Yes
MOV.L	@(disp,Rm),Rn	0101nnnnmmmmdddd	(disp × 4 + Rm) → Rn	1	—	Yes	Yes	Yes
MOV.B	Rm,@(R0,Rn)	0000nnnnmmmm0100	Rm → (R0 + Rn)	1	—	Yes	Yes	Yes
MOV.W	Rm,@(R0,Rn)	0000nnnnmmmm0101	Rm → (R0 + Rn)	1	—	Yes	Yes	Yes

chanhvinh.com

Instruction		Instruction Code	Operation	Execution Cycles	T Bit	Compatibility SH2, SH2E	SH4	SH-2A
MOV.L	Rm,@(R0,Rn)	0000nnnnmmmm0110	Rm → (R0 + Rn)	1	—	Yes	Yes	Yes
MOV.B	@(R0,Rm),Rn	0000nnnnmmmm1100	(R0 + Rm) → sign extension → Rn	1	—	Yes	Yes	Yes
MOV.W	@(R0,Rm),Rn	0000nnnnmmmm1101	(R0 + Rm) → sign extension → Rn	1	—	Yes	Yes	Yes
MOV.L	@(R0,Rm),Rn	0000nnnnmmmm1110	(R0 + Rm) → Rn	1	—	Yes	Yes	Yes
MOV.B	R0,@(disp,GBR)	11000000dddddddd	R0 → (disp + GBR)	1	—	Yes	Yes	Yes
MOV.W	R0,@(disp,GBR)	11000001dddddddd	R0 → (disp × 2 + GBR)	1	—	Yes	Yes	Yes
MOV.L	R0,@(disp,GBR)	11000010dddddddd	R0 → (disp × 4 + GBR)	1	—	Yes	Yes	Yes
MOV.B	@(disp,GBR),R0	11000100dddddddd	(disp + GBR) → sign extension → R0	1	—	Yes	Yes	Yes
MOV.W	@(disp,GBR),R0	11000101dddddddd	(disp × 2 + GBR) → sign extension → R0	1	—	Yes	Yes	Yes
MOV.L	@(disp,GBR),R0	11000110dddddddd	(disp × 4 + GBR) → R0	1	—	Yes	Yes	Yes
MOV.B	R0,@Rn+	0100nnnn10001011	R0 → (Rn), Rn + 1 → Rn	1	—			Yes
MOV.W	R0,@Rn+	0100nnnn10011011	R0 → (Rn), Rn + 2 → Rn	1	—			Yes
MOV.L	R0,@Rn+	0100nnnn10101011	R0 → Rn), Rn + 4 → Rn	1	—			Yes
MOV.B	@-Rm,R0	0100mmmm11001011	Rm-1 → Rm, (Rm) → sign extension → R0	1	—			Yes
MOV.W	@-Rm,R0	0100mmmm11011011	Rm-2 → Rm, (Rm) → sign extension → R0	1	—			Yes
MOV.L	@-Rm,R0	0100mmmm11101011	Rm-4 → Rm, (Rm) → R0	1	—			Yes
MOV.B	Rm,@(disp12,Rn)	0011nnnnmmmm0001 0000dddddddddddd	Rm → (disp + Rn)	1	—			Yes
MOV.W	Rm,@(disp12,Rn)	0011nnnnmmmm0001 0001dddddddddddd	Rm → (disp × 2 + Rn)	1	—			Yes
MOV.L	Rm,@(disp12,Rn)	0011nnnnmmmm0001 0010dddddddddddd	Rm → (disp × 4 + Rn)	1	—			Yes
MOV.B	@(disp12,Rm),Rn	0011nnnnmmmm0001 0100dddddddddddd	(disp + Rm) → sign extension → Rn	1	—			Yes
MOV.W	@(disp12,Rm),Rn	0011nnnnmmmm0001 0101dddddddddddd	(disp × 2 + Rm) → sign extension → Rn	1	—			Yes

chanhvinh.com

Instruction		Instruction Code	Operation	Execution Cycles	T Bit	Compatibility		
						SH2, SH2E	SH4	SH-2A
MOV.L	@(disp12,Rm),Rn	0011nnnnmmmm0001 0110dddddddddddd	(disp × 4 + Rm) → Rn	1	—			Yes
MOVA	@(disp,PC),R0	11000111dddddddd	disp × 4 + PC → R0	1	—	Yes	Yes	Yes
MOVI20	#imm20,Rn	0000nnnniiii0000 iiiiiiiiiiiiiiii	imm → sign extension → Rn	1	—			Yes
MOVI20S	#imm20,Rn	0000nnnniiii0001 iiiiiiiiiiiiiiii	imm << 8 → sign extension → Rn	1	—			Yes
MOVML.L	Rm,@-R15	0100mmmm11110001	R15-4 → R15, Rm → (R15) R15-4 → R15, Rm-1 → (R15) : R15-4 → R15, R0 → (R15) Note: When Rm = R15, read Rm as PR	1 to 16	—			Yes
MOVML.L	@R15+,Rn	0100nnnn11110101	(R15) → R0, R15 + 4 → R15 (R15) → R1, R15 + 4 → R15 : (R15) → Rn Note: When Rn = R15, read Rn as PR	1 to 16	—			Yes
MOVMU.L	Rm,@-R15	0100mmmm11110000	R15-4 → R15, PR → (R15) R15-4 → R15, R14 → (R15) : R15-4 → R15, Rm → (R15) Note: When Rm = R15, read Rm as PR	1 to 16	—			Yes
MOVMU.L	@R15+,Rn	0100nnnn11110100	(R15) → Rn, R15 + 4 → R15 (R15) → Rn + 1, R15 + 4 → R15 : (R15) → R14, R15 + 4 → R15 (R15) → PR Note: When Rn = R15, read Rn as PR	1 to 16	—			Yes
MOVRT	Rn	0000nnnn00111001	~T → Rn	1	—			Yes
MOVT	Rn	0000nnnn00101001	T → Rn	1	—	Yes	Yes	Yes

chanhvinh.com

Instruction		Instruction Code	Operation	Execution Cycles	T Bit	Compatibility		
						SH2, SH2E	SH4	SH-2A
MOVU.B	@(disp12,Rm),Rn	0011nnnnmmmm0001 1000ddddddddddd	(disp + Rm) → zero extension → Rn	1	—			Yes
MOVU.W	@(disp12,Rm),Rn	0011nnnnmmmm0001 1001ddddddddddd	(disp × 2 + Rm) → zero extension → Rn	1	—			Yes
NOTT		0000000001101000	~T → T	1	Operation result			Yes
PREF	@Rn	0000nnnn10000011	(Rn) → operand cache	1	—		Yes	Yes
SWAP.B	Rm,Rn	0110nnnnmmmm1000	Rm → swap lower 2 bytes → Rn	1	—	Yes	Yes	Yes
SWAP.W	Rm,Rn	0110nnnnmmmm1001	Rm → swap upper and lower words → Rn	1	—	Yes	Yes	Yes
XTRCT	Rm,Rn	0010nnnnmmmm1101	Middle 32 bits of Rm:Rn → Rn	1	—	Yes	Yes	Yes

chanhvinh.com

2.4.3 Arithmetic Operation Instructions

Table 2.12 Arithmetic Operation Instructions

Instruction		Instruction Code	Operation	Execution Cycles	T Bit	Compatibility SH2, SH2E	SH4	SH-2A
ADD	Rm,Rn	0011nnnnmmmm1100	Rn + Rm → Rn	1	—	Yes	Yes	Yes
ADD	#imm,Rn	0111nnnniiiiiiii	Rn + imm → Rn	1	—	Yes	Yes	Yes
ADDC	Rm,Rn	0011nnnnmmmm1110	Rn + Rm + T → Rn, carry → T	1	Carry	Yes	Yes	Yes
ADDV	Rm,Rn	0011nnnnmmmm1111	Rn + Rm → Rn, overflow → T	1	Over-flow	Yes	Yes	Yes
CMP/EQ	#imm,R0	10001000iiiiiiii	When R0 = imm, 1 → T Otherwise, 0 → T	1	Com-parison result	Yes	Yes	Yes
CMP/EQ	Rm,Rn	0011nnnnmmmm0000	When Rn = Rm, 1 → T Otherwise, 0 → T	1	Com-parison result	Yes	Yes	Yes
CMP/HS	Rm,Rn	0011nnnnmmmm0010	When Rn ≥ Rm (unsigned), 1 → T Otherwise, 0 → T	1	Com-parison result	Yes	Yes	Yes
CMP/GE	Rm,Rn	0011nnnnmmmm0011	When Rn ≥ Rm (signed), 1 → T Otherwise, 0 → T	1	Com-parison result	Yes	Yes	Yes
CMP/HI	Rm,Rn	0011nnnnmmmm0110	When Rn > Rm (unsigned), 1 → T Otherwise, 0 → T	1	Com-parison result	Yes	Yes	Yes
CMP/GT	Rm,Rn	0011nnnnmmmm0111	When Rn > Rm (signed), 1 → T Otherwise, 0 → T	1	Com-parison result	Yes	Yes	Yes
CMP/PL	Rn	0100nnnn00010101	When Rn > 0, 1 → T Otherwise, 0 → T	1	Com-parison result	Yes	Yes	Yes
CMP/PZ	Rn	0100nnnn00010001	When Rn ≥ 0, 1 → T Otherwise, 0 → T	1	Com-parison result	Yes	Yes	Yes
CMP/STR	Rm,Rn	0010nnnnmmmm1100	When any bytes are equal, 1 → T Otherwise, 0 → T	1	Com-parison result	Yes	Yes	Yes

chanhvinh.com

Instruction		Instruction Code	Operation	Execution Cycles	T Bit	Compatibility		
						SH2, SH2E	SH4	SH-2A
CLIPS.B	Rn	0100nnnn10010001	When Rn > (H'0000007F), (H'0000007F) → Rn, 1 → CS when Rn < (H'FFFFFF80), (H'FFFFFF80) → Rn, 1 → CS	1	—			Yes
CLIPS.W	Rn	0100nnnn10010101	When Rn > (H'00007FFF), (H'00007FFF) → Rn, 1 → CS When Rn < (H'FFFF8000), (H'FFFF8000) → Rn, 1 → CS	1	—			Yes
CLIPU.B	Rn	0100nnnn10000001	When Rn > (H'000000FF), (H'000000FF) → Rn, 1 → CS	1	—			Yes
CLIPU.W	Rn	0100nnnn10000101	When Rn > (H'0000FFFF), (H'0000FFFF) → Rn, 1 → CS	1	—			Yes
DIV1	Rm,Rn	0011nnnnmmmm0100	1-step division (Rn ÷ Rm)	1	Calcu-lation result	Yes	Yes	Yes
DIV0S	Rm,Rn	0010nnnnmmmm0111	MSB of Rn → Q, MSB of Rm → M, M ^ Q → T	1	Calcu-lation result	Yes	Yes	Yes
DIV0U		0000000000011001	0 → M/Q/T	1	0	Yes	Yes	Yes
DIVS	R0,Rn	0100nnnn10010100	Signed operation of Rn ÷ R0 → Rn 32 ÷ 32 → 32 bits	36	—			Yes
DIVU	R0,Rn	0100nnnn10000100	Unsigned operation of Rn ÷ R0 → Rn 32 ÷ 32 → 32 bits	34	—			Yes
DMULS.L	Rm,Rn	0011nnnnmmmm1101	Signed operation of Rn × Rm → MACH, MACL 32 × 32 → 64 bits	2	—	Yes	Yes	Yes
DMULU.L	Rm,Rn	0011nnnnmmmm0101	Unsigned operation of Rn × Rm → MACH, MACL 32 × 32 → 64 bits	2	—	Yes	Yes	Yes
DT	Rn	0100nnnn00010000	Rn – 1 → Rn When Rn is 0, 1 → T When Rn is not 0, 0 → T	1	Compa-rison result	Yes	Yes	Yes
EXTS.B	Rm,Rn	0110nnnnmmmm1110	Byte in Rm is sign-extended → Rn	1	—	Yes	Yes	Yes
EXTS.W	Rm,Rn	0110nnnnmmmm1111	Word in Rm is sign-extended → Rn	1	—	Yes	Yes	Yes

chanhvinh.com

Instruction		Instruction Code	Operation	Execution Cycles	T Bit	Compatibility SH2, SH2E	SH4	SH-2A
EXTU.B	Rm,Rn	0110nnnnmmmm1100	Byte in Rm is zero-extended → Rn	1	—	Yes	Yes	Yes
EXTU.W	Rm,Rn	0110nnnnmmmm1101	Word in Rm is zero-extended → Rn	1	—	Yes	Yes	Yes
MAC.L	@Rm+,@Rn+	0000nnnnmmmm1111	Signed operation of (Rn) × (Rm) + MAC → MAC 32 × 32 + 64 → 64 bits	4	—	Yes	Yes	Yes
MAC.W	@Rm+,@Rn+	0100nnnnmmmm1111	Signed operation of (Rn) × (Rm) + MAC → MAC 16 × 16 + 64 → 64 bits	3	—	Yes	Yes	Yes
MUL.L	Rm,Rn	0000nnnnmmmm0111	Rn × Rm → MACL 32 × 32 → 32 bits	2	—	Yes	Yes	Yes
MULR	R0,Rn	0100nnnn10000000	R0 × Rn → Rn 32 × 32 → 32 bits	2				Yes
MULS.W	Rm,Rn	0010nnnnmmmm1111	Signed operation of Rn × Rm → MACL 16 × 16 → 32 bits	1	—	Yes	Yes	Yes
MULU.W	Rm,Rn	0010nnnnmmmm1110	Unsigned operation of Rn × Rm → MACL 16 × 16 → 32 bits	1	—	Yes	Yes	Yes
NEG	Rm,Rn	0110nnnnmmmm1011	0-Rm → Rn	1	—	Yes	Yes	Yes
NEGC	Rm,Rn	0110nnnnmmmm1010	0-Rm-T → Rn, borrow → T	1	Borrow	Yes	Yes	Yes
SUB	Rm,Rn	0011nnnnmmmm1000	Rn-Rm → Rn	1	—	Yes	Yes	Yes
SUBC	Rm,Rn	0011nnnnmmmm1010	Rn-Rm-T → Rn, borrow → T	1	Borrow	Yes	Yes	Yes
SUBV	Rm,Rn	0011nnnnmmmm1011	Rn-Rm → Rn, underflow → T	1	Overflow	Yes	Yes	Yes

chanhvinh.com

2.4.4 Logic Operation Instructions

Table 2.13 Logic Operation Instructions

Instruction		Instruction Code	Operation	Execution Cycles	T Bit	Compatibility SH2, SH2E	SH4	SH-2A
AND	Rm,Rn	0010nnnnmmmm1001	Rn & Rm → Rn	1	—	Yes	Yes	Yes
AND	#imm,R0	11001001iiiiiiii	R0 & imm → R0	1	—	Yes	Yes	Yes
AND.B	#imm,@(R0,GBR)	11001101iiiiiiii	(R0 + GBR) & imm → (R0 + GBR)	3	—	Yes	Yes	Yes
NOT	Rm,Rn	0110nnnnmmmm0111	~Rm → Rn	1	—	Yes	Yes	Yes
OR	Rm,Rn	0010nnnnmmmm1011	Rn | Rm → Rn	1	—	Yes	Yes	Yes
OR	#imm,R0	11001011iiiiiiii	R0 | imm → R0	1	—	Yes	Yes	Yes
OR.B	#imm,@(R0,GBR)	11001111iiiiiiii	(R0 + GBR) | imm → (R0 + GBR)	3	—	Yes	Yes	Yes
TAS.B	@Rn	0100nnnn00011011	When (Rn) is 0, 1 → T Otherwise, 0 → T, 1 → MSB of(Rn)	3	Test result	Yes	Yes	Yes
TST	Rm,Rn	0010nnnnmmmm1000	Rn & Rm When the result is 0, 1 → T Otherwise, 0 → T	1	Test result	Yes	Yes	Yes
TST	#imm,R0	11001000iiiiiiii	R0 & imm When the result is 0, 1 → T Otherwise, 0 → T	1	Test result	Yes	Yes	Yes
TST.B	#imm,@(R0,GBR)	11001100iiiiiiii	(R0 + GBR) & imm When the result is 0, 1 → T Otherwise, 0 → T	3	Test result	Yes	Yes	Yes
XOR	Rm,Rn	0010nnnnmmmm1010	Rn ^ Rm → Rn	1	—	Yes	Yes	Yes
XOR	#imm,R0	11001010iiiiiiii	R0 ^ imm → R0	1	—	Yes	Yes	Yes
XOR.B	#imm,@(R0,GBR)	11001110iiiiiiii	(R0 + GBR) ^ imm → (R0 + GBR)	3	—	Yes	Yes	Yes

chanhvinh.com

2.4.5 Shift Instructions

Table 2.14 Shift Instructions

Instruction		Instruction Code	Operation	Execution Cycles	T Bit	Compatibility SH2, SH2E	SH4	SH-2A
ROTL	Rn	0100nnnn00000100	T ← Rn ← MSB	1	MSB	Yes	Yes	Yes
ROTR	Rn	0100nnnn00000101	LSB → Rn → T	1	LSB	Yes	Yes	Yes
ROTCL	Rn	0100nnnn00100100	T ← Rn ← T	1	MSB	Yes	Yes	Yes
ROTCR	Rn	0100nnnn00100101	T → Rn → T	1	LSB	Yes	Yes	Yes
SHAD	Rm,Rn	0100nnnnmmmm1100	When Rm ≥ 0, Rn << Rm → Rn When Rm < 0, Rn >> |Rm| → [MSB → Rn]	1	—		Yes	Yes
SHAL	Rn	0100nnnn00100000	T ← Rn ← 0	1	MSB	Yes	Yes	Yes
SHAR	Rn	0100nnnn00100001	MSB → Rn → T	1	LSB	Yes	Yes	Yes
SHLD	Rm,Rn	0100nnnnmmmm1101	When Rm ≥ 0, Rn << Rm → Rn When Rm < 0, Rn >> |Rm| → [0 → Rn]	1	—		Yes	Yes
SHLL	Rn	0100nnnn00000000	T ← Rn ← 0	1	MSB	Yes	Yes	Yes
SHLR	Rn	0100nnnn00000001	0 → Rn → T	1	LSB	Yes	Yes	Yes
SHLL2	Rn	0100nnnn00001000	Rn << 2 → Rn	1	—	Yes	Yes	Yes
SHLR2	Rn	0100nnnn00001001	Rn >> 2 → Rn	1	—	Yes	Yes	Yes
SHLL8	Rn	0100nnnn00011000	Rn << 8 → Rn	1	—	Yes	Yes	Yes
SHLR8	Rn	0100nnnn00011001	Rn >> 8 → Rn	1	—	Yes	Yes	Yes
SHLL16	Rn	0100nnnn00101000	Rn << 16 → Rn	1	—	Yes	Yes	Yes
SHLR16	Rn	0100nnnn00101001	Rn >> 16 → Rn	1	—	Yes	Yes	Yes

chanhvinh.com

2.4.6 Branch Instructions

Table 2.15 Branch Instructions

Instruction		Instruction Code	Operation	Execution Cycles	T Bit	Compatibility SH2, SH2E	SH4	SH-2A
BF	label	10001011dddddddd	When T = 0, disp × 2 + PC → PC, When T = 1, nop	3/1*	—	Yes	Yes	Yes
BF/S	label	10001111dddddddd	Delayed branch When T = 0, disp × 2 + PC → PC, When T = 1, nop	2/1*	—	Yes	Yes	Yes
BT	label	10001001dddddddd	When T = 1, disp × 2 + PC → PC, When T = 0, nop	3/1*	—	Yes	Yes	Yes
BT/S	label	10001101dddddddd	Delayed branch When T = 1, disp × 2 + PC → PC, When T = 0, nop	2/1*	—	Yes	Yes	Yes
BRA	label	1010dddddddddddd	Delayed branch, disp × 2 + PC → PC	2	—	Yes	Yes	Yes
BRAF	Rm	0000mmmm00100011	Delayed branch, Rm + PC → PC	2	—	Yes	Yes	Yes
BSR	label	1011dddddddddddd	Delayed branch, PC → PR, disp × 2 + PC → PC	2	—	Yes	Yes	Yes
BSRF	Rm	0000mmmm00000011	Delayed branch, PC → PR, Rm + PC → PC	2	—	Yes	Yes	Yes
JMP	@Rm	0100mmmm00101011	Delayed branch, Rm → PC	2	—	Yes	Yes	Yes
JSR	@Rm	0100mmmm00001011	Delayed branch, PC → PR, Rm → PC	2	—	Yes	Yes	Yes
JSR/N	@Rm	0100mmmm01001011	PC-2 → PR, Rm → PC	3	—			Yes
JSR/N	@@(disp8,TBR)	10000011dddddddd	PC-2 → PR, (disp × 4 + TBR) → PC	5	—			Yes
RTS		0000000000001011	Delayed branch, PR → PC	2	—	Yes	Yes	Yes
RTS/N		0000000001101011	PR → PC	3	—			Yes
RTV/N	Rm	0000mmmm01111011	Rm → R0, PR → PC	3	—			Yes

Note: * One cycle when the program does not branch.

chanhvinh.com

2.4.7 System Control Instructions

Table 2.16 System Control Instructions

Instruction		Instruction Code	Operation	Execution Cycles	T Bit	Compatibility SH2, SH2E	SH4	SH-2A
CLRT		0000000000001000	0 → T	1	0	Yes	Yes	Yes
CLRMAC		0000000000101000	0 → MACH,MACL	1	—	Yes	Yes	Yes
LDBANK	@Rm,R0	0100mmmm11100101	(Specified register bank entry) → R0	6	—			Yes
LDC	Rm,SR	0100mmmm00001110	Rm → SR	3	LSB	Yes	Yes	Yes
LDC	Rm,TBR	0100mmmm01001010	Rm → TBR	1	—			Yes
LDC	Rm,GBR	0100mmmm00011110	Rm → GBR	1	—	Yes	Yes	Yes
LDC	Rm,VBR	0100mmmm00101110	Rm → VBR	1	—	Yes	Yes	Yes
LDC.L	@Rm+,SR	0100mmmm00000111	(Rm) → SR, Rm + 4 → Rm	5	LSB	Yes	Yes	Yes
LDC.L	@Rm+,GBR	0100mmmm00010111	(Rm) → GBR, Rm + 4 → Rm	1	—	Yes	Yes	Yes
LDC.L	@Rm+,VBR	0100mmmm00100111	(Rm) → VBR, Rm + 4 → Rm	1	—	Yes	Yes	Yes
LDS	Rm,MACH	0100mmmm00001010	Rm → MACH	1	—	Yes	Yes	Yes
LDS	Rm,MACL	0100mmmm00011010	Rm → MACL	1	—	Yes	Yes	Yes
LDS	Rm,PR	0100mmmm00101010	Rm → PR	1	—	Yes	Yes	Yes
LDS.L	@Rm+,MACH	0100mmmm00000110	(Rm) → MACH, Rm + 4 → Rm	1	—	Yes	Yes	Yes
LDS.L	@Rm+,MACL	0100mmmm00010110	(Rm) → MACL, Rm + 4 → Rm	1	—	Yes	Yes	Yes
LDS.L	@Rm+,PR	0100mmmm00100110	(Rm) → PR, Rm + 4 → Rm	1	—	Yes	Yes	Yes
NOP		0000000000001001	No operation	1	—	Yes	Yes	Yes
RESBANK		0000000001011011	Bank → R0 to R14, GBR, MACH, MACL, PR	9*	—			Yes
RTE		0000000000101011	Delayed branch, stack area → PC/SR	6	—	Yes	Yes	Yes
SETT		0000000000011000	1 → T	1	1	Yes	Yes	Yes
SLEEP		0000000000011011	Sleep	5	—	Yes	Yes	Yes
STBANK	R0,@Rn	0100nnnn11100001	R0 → (specified register bank entry)	7	—			Yes
STC	SR,Rn	0000nnnn00000010	SR → Rn	2	—	Yes	Yes	Yes
STC	TBR,Rn	0000nnnn01001010	TBR → Rn	1	—			Yes

chanhvinh.com

Instruction		Instruction Code	Operation	Execution Cycles	T Bit	Compatibility SH2, SH2E	SH4	SH-2A
STC	GBR,Rn	0000nnnn00010010	GBR → Rn	1	—	Yes	Yes	Yes
STC	VBR,Rn	0000nnnn00100010	VBR → Rn	1	—	Yes	Yes	Yes
STC.L	SR,@-Rn	0100nnnn00000011	Rn-4 → Rn, SR → (Rn)	2	—	Yes	Yes	Yes
STC.L	GBR,@-Rn	0100nnnn00010011	Rn-4 → Rn, GBR → (Rn)	1	—	Yes	Yes	Yes
STC.L	VBR,@-Rn	0100nnnn00100011	Rn-4 → Rn, VBR → (Rn)	1	—	Yes	Yes	Yes
STS	MACH,Rn	0000nnnn00001010	MACH → Rn	1	—	Yes	Yes	Yes
STS	MACL,Rn	0000nnnn00011010	MACL → Rn	1	—	Yes	Yes	Yes
STS	PR,Rn	0000nnnn00101010	PR → Rn	1	—	Yes	Yes	Yes
STS.L	MACH,@-Rn	0100nnnn00000010	Rn-4 → Rn, MACH → (Rn)	1	—	Yes	Yes	Yes
STS.L	MACL,@-Rn	0100nnnn00010010	Rn-4 → Rn, MACL → (Rn)	1	—	Yes	Yes	Yes
STS.L	PR,@-Rn	0100nnnn00100010	Rn-4 → Rn, PR → (Rn)	1	—	Yes	Yes	Yes
TRAPA	#imm	11000011iiiiiiii	PC/SR → stack area, (imm × 4 + VBR) → PC	5	—	Yes	Yes	Yes

Notes: 1. Instruction execution cycles: The execution cycles shown in the table are minimums. In practice, the number of instruction execution states in cases such as the following:

a. When there is a conflict between an instruction fetch and a data access

b. When the destination register of a load instruction (memory → register) is the same as the register used by the next instruction.

* In the event of bank overflow, the number of cycles is 19.

chanhvinh.com

2.4.8 Floating-Point Operation Instructions

Table 2.17 Floating-Point Operation Instructions

Instruction		Instruction Code	Operation	Execution Cycles	T Bit	Compatibility		
						SH2E	SH4	SH-2A/ SH2A-FPU
FABS	FRn	1111nnnn01011101	|FRn| → FRn	1	—	Yes	Yes	Yes
FABS	DRn	1111nnn001011101	|DRn| → DRn	1	—		Yes	Yes
FADD	FRm, FRn	1111nnnnmmmm0000	FRn + FRm → FRn	1	—	Yes	Yes	Yes
FADD	DRm, DRn	1111nnn0mmm00000	DRn + DRm → DRn	6	—		Yes	Yes
FCMP/EQ	FRm, FRn	1111nnnnmmmm0100	(FRn = FRm)? 1:0 → T	1	Comparison result	Yes	Yes	Yes
FCMP/EQ	DRm, DRn	1111nnn0mmm00100	(DRn = DRm)? 1:0 → T	2	Comparison result		Yes	Yes
FCMP/GT	FRm, FRn	1111nnnnmmmm0101	(FRn > FRm)? 1:0 → T	1	Comparison result	Yes	Yes	Yes
FCMP/GT	DRm, DRn	1111nnn0mmm00101	(DRn > DRm)? 1:0 → T	2	Comparison result		Yes	Yes
FCNVDS	DRm, FPUL	1111mmm010111101	(float) DRm → FPUL	2	—		Yes	Yes
FCNVSD	FPUL, DRn	1111nnn010101101	(double) FPUL → DRn	2	—		Yes	Yes
FDIV	FRm, FRn	1111nnnnmmmm0011	FRn/FRm → FRn	10	—	Yes	Yes	Yes
FDIV	DRm, DRn	1111nnn0mmm00011	DRn/DRm → DRn	23	—		Yes	Yes
FLDI0	FRn	1111nnnn10001101	0 × 00000000 → FRn	1	—	Yes	Yes	Yes
FLDI1	FRn	1111nnnn10011101	0 × 3F800000 → FRn	1	—	Yes	Yes	Yes
FLDS	FRm, FPUL	1111mmmm00011101	FRm → FPUL	1	—	Yes	Yes	Yes
FLOAT	FPUL,FRn	1111nnnn00101101	(float)FPUL → FRn	1	—	Yes	Yes	Yes
FLOAT	FPUL,DRn	1111nnn000101101	(double)FPUL → DRn	2	—		Yes	Yes
FMAC	FR0,FRm,FRn	1111nnnnmmmm1110	FR0 × FRm+FRn → FRn	1	—	Yes	Yes	Yes
FMOV	FRm, FRn	1111nnnnmmmm1100	FRm → FRn	1	—	Yes	Yes	Yes
FMOV	DRm, DRn	1111nnn0mmm01100	DRm → DRn	2	—		Yes	Yes

chanhvinh.com

Instruction		Instruction Code	Operation	Execution Cycles	T Bit	Compatibility SH2E	SH4	SH-2A/ SH2A-FPU
FMOV.S	@(R0, Rm), FRn	1111nnnnmmmm0110	(R0 + Rm) → FRn	1	—	Yes	Yes	Yes
FMOV.D	@(R0, Rm), DRn	1111nnn0mmmm0110	(R0 + Rm) → DRn	2	—		Yes	Yes
FMOV.S	@Rm+, FRn	1111nnnnmmmm1001	(Rm) → FRn, Rm+=4	1	—	Yes	Yes	Yes
FMOV.D	@Rm+, DRn	1111nnn0mmmm1001	(Rm) → DRn, Rm += 8	2	—		Yes	Yes
FMOV.S	@Rm, FRn	1111nnnnmmmm1000	(Rm) → FRn	1	—	Yes	Yes	Yes
FMOV.D	@Rm, DRn	1111nnn0mmmm1000	(Rm) → DRn	2	—		Yes	Yes
FMOV.S	@(disp12,Rm),FRn	0011nnnnmmmm0001 0111dddddddddddd	(disp × 4 + Rm) → FRn	1	—			Yes
FMOV.D	@(disp12,Rm),DRn	0011nnn0mmmm0001 0111dddddddddddd	(disp × 8 + Rm) → DRn	2	—			Yes
FMOV.S	FRm, @(R0,Rn)	1111nnnnmmmm0111	FRm → (R0 + Rn)	1	—	Yes	Yes	Yes
FMOV.D	DRm, @(R0,Rn)	1111nnnnmmm00111	DRm → (R0 + Rn)	2	—		Yes	Yes
FMOV.S	FRm, @-Rn	1111nnnnmmmm1011	Rn-=4, FRm → (Rn)	1	—	Yes	Yes	Yes
FMOV.D	DRm, @-Rn	1111nnnnmmm01011	Rn-=8, DRm → (Rn)	2	—		Yes	Yes
FMOV.S	FRm, @Rn	1111nnnnmmmm1010	FRm → (Rn)	1	—	Yes	Yes	Yes
FMOV.D	DRm, @Rn	1111nnnnmmm01010	DRm → (Rn)	2	—		Yes	Yes
FMOV.S	FRm, @(disp12,Rn)	0011nnnnmmmm0001 0011dddddddddddd	FRm → (disp × 4 + Rn)	1	—			Yes
FMOV.D	DRm, @(disp12,Rn)	0011nnnnmmm00001 0011dddddddddddd	DRm → (disp × 8 + Rn)	2	—			Yes
FMUL	FRm, FRn	1111nnnnmmmm0010	FRn × FRm → FRn	1	—	Yes	Yes	Yes
FMUL	DRm, DRn	1111nnn0mmm00010	DRn × DRm → DRn	6	—		Yes	Yes
FNEG	FRn	1111nnnn01001101	-FRn → FRn	1	—	Yes	Yes	Yes
FNEG	DRn	1111nnn001001101	-DRn → DRn	1	—		Yes	Yes
FSCHG		1111001111111101	FPSCR.SZ=~FPSCR.SZ	1	—		Yes	Yes
FSQRT	FRn	1111nnnn01101101	√FRn → FRn	9	—		Yes	Yes
FSQRT	DRn	1111nnn001101101	√DRn → DRn	22	—		Yes	Yes
FSTS	FPUL,FRn	1111nnnn00001101	FPUL → FRn	1	—	Yes	Yes	Yes
FSUB	FRm, FRn	1111nnnnmmmm0001	FRn-FRm → FRn	1	—	Yes	Yes	Yes

chanhvinh.com

Instruction		Instruction Code	Operation	Execution Cycles	T Bit	Compatibility SH2E	SH4	SH-2A/ SH2A-FPU
FSUB	DRm, DRn	1111nnn0mmm00001	DRn-DRm → DRn	6	—		Yes	Yes
FTRC	FRm, FPUL	1111mmmm00111101	(long)FRm → FPUL	1	—	Yes	Yes	Yes
FTRC	DRm, FPUL	1111mmm000111101	(long)DRm → FPUL	2	—		Yes	Yes

2.4.9 FPU-Related CPU Instructions

Table 2.18 FPU-Related CPU Instructions

Instruction		Instruction Code	Operation	Execution Cycles	T Bit	Compatibility SH2E	SH4	SH-2A/ SH2A-FPU
LDS	Rm,FPSCR	0100mmmm01101010	Rm → FPSCR	1	—	Yes	Yes	Yes
LDS	Rm,FPUL	0100mmmm01011010	Rm → FPUL	1	—	Yes	Yes	Yes
LDS.L	@Rm+, FPSCR	0100mmmm01100110	(Rm) → FPSCR, Rm+=4	1	—	Yes	Yes	Yes
LDS.L	@Rm+, FPUL	0100mmmm01010110	(Rm) → FPUL, Rm+=4	1	—	Yes	Yes	Yes
STS	FPSCR, Rn	0000nnnn01101010	FPSCR → Rn	1	—	Yes	Yes	Yes
STS	FPUL,Rn	0000nnnn01011010	FPUL → Rn	1	—	Yes	Yes	Yes
STS.L	FPSCR,@-Rn	0100nnnn01100010	Rn-=4, FPCSR → (Rn)	1	—	Yes	Yes	Yes
STS.L	FPUL,@-Rn	0100nnnn01010010	Rn-=4, FPUL → (Rn)	1	—	Yes	Yes	Yes

chanhvinh.com

2.4.10 Bit Manipulation Instructions

Table 2.19 Bit Manipulation Instructions

Instruction		Instruction Code	Operation	Execution Cycles	T Bit	Compatibility SH2, SH2E	SH4	SH-2A
BAND.B	#imm3,@(disp12,Rn)	0011nnnn0iii1001 0100dddddddddddd	(imm of (disp + Rn)) & T →	3	Operation result			Yes
BANDNOT.B	#imm3,@(disp12,Rn)	0011nnnn0iii1001 1100dddddddddddd	~(imm of (disp + Rn)) & T → T	3	Operation result			Yes
BCLR.B	#imm3,@(disp12,Rn)	0011nnnn0iii1001 0000dddddddddddd	0 → (imm of (disp + Rn))	3	—			Yes
BCLR	#imm3,Rn	10000110nnnn0iii	0 → imm of Rn	1	—			Yes
BLD.B	#imm3,@(disp12,Rn)	0011nnnn0iii1001 0011dddddddddddd	(imm of (disp + Rn)) →	3	Operation result			Yes
BLD	#imm3,Rn	10000111nnnn1iii	imm of Rn → T	1	Operation result			Yes
BLDNOT.B	#imm3,@(disp12,Rn)	0011nnnn0iii1001 1011dddddddddddd	~(imm of (disp + Rn)) → T	3	Operation result			Yes
BOR.B	#imm3,@(disp12,Rn)	0011nnnn0iii1001 0101dddddddddddd	(imm of (disp + Rn)) | T → T	3	Operation result			Yes
BORNOT.B	#imm3,@(disp12,Rn)	0011nnnn0iii1001 1101dddddddddddd	~(imm of (disp + Rn)) | T → T	3	Operation result			Yes
BSET.B	#imm3,@(disp12,Rn)	0011nnnn0iii1001 0001dddddddddddd	1 → (imm of (disp + Rn))	3	—			Yes
BSET	#imm3,Rn	10000110nnnn1iii	1 → imm of Rn	1	—			Yes
BST.B	#imm3,@(disp12,Rn)	0011nnnn0iii1001 0010dddddddddddd	T → (imm of (disp + Rn))	3	—			Yes
BST	#imm3,Rn	10000111nnnn0iii	T → imm of Rn	1	—			Yes
BXOR.B	#imm3,@(disp12,Rn)	0011nnnn0iii1001 0110dddddddddddd	(imm of (disp + Rn)) ^ T → T	3	Operation result			Yes

chanhvinh.com

2.5 Processing States

The CPU has five processing states: reset, exception handling, bus-released, program execution, and power-down. Figure 2.6 shows the transitions between the states.

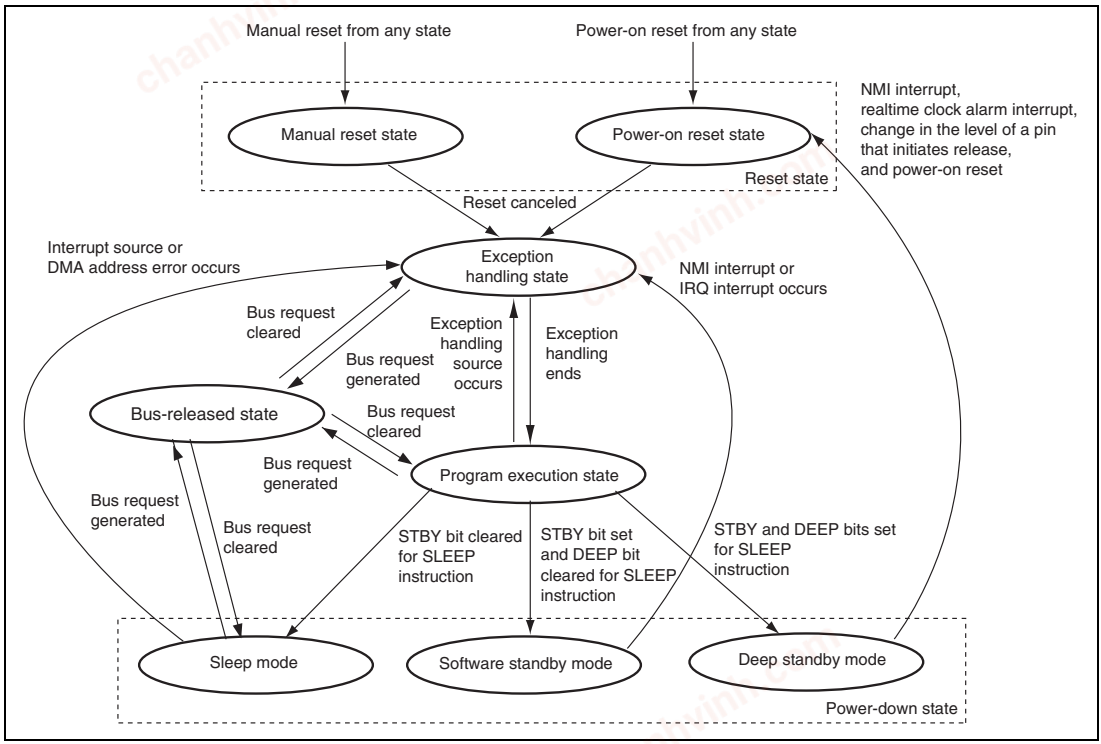

Figure 2.6 Transitions between Processing States

chanhvinh.com

(1) Reset State

In the reset state, the CPU is reset. There are two kinds of reset, power-on reset and manual reset.

(2) Exception Handling State

The exception handling state is a transient state that occurs when exception handling sources such as resets or interrupts alter the CPU's processing state flow.

For a reset, the initial values of the program counter (PC) (execution start address) and stack pointer (SP) are fetched from the exception handling vector table and stored; the CPU then branches to the execution start address and execution of the program begins.

For an interrupt, the stack pointer (SP) is accessed and the program counter (PC) and status register (SR) are saved to the stack area. The exception service routine start address is fetched from the exception handling vector table; the CPU then branches to that address and the program starts executing, thereby entering the program execution state.

(3) Program Execution State

In the program execution state, the CPU sequentially executes the program.

(4) Power-Down State

In the power-down state, the CPU stops operating to reduce power consumption. The SLEEP instruction places the CPU in sleep mode, software standby mode, or deep standby mode.

(5) Bus-Released State

In the bus-released state, the CPU releases bus to a device that has requested it.

chanhvinh.com

Section 3 Floating-Point Unit (FPU)

3.1 Features

The FPU has the following features.

- Conforms to IEEE754 standard
- 16 single-precision floating-point registers (can also be referenced as eight double-precision registers)
- Two rounding modes: Round to nearest and round to zero
- Denormalization modes: Flush to zero
- Five exception sources: Invalid operation, divide by zero, overflow, underflow, and inexact
- Comprehensive instructions: Single-precision, double-precision, and system control

chanhvinh.com

3.2 Data Formats

3.2.1 Floating-Point Format

A floating-point number consists of the following three fields:

- Sign (s)
- Exponent (e)
- Fraction (f)

This LSI can handle single-precision and double-precision floating-point numbers, using the formats shown in figures 3.1 and 3.2.

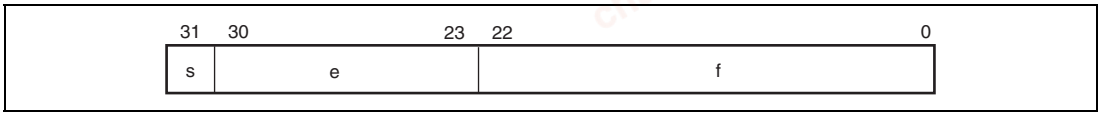

Figure 3.1 Format of Single-Precision Floating-Point Number

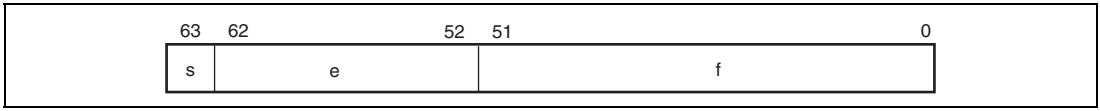

Figure 3.2 Format of Double-Precision Floating-Point Number

The exponent is expressed in biased form, as follows:

$$e = E + bias$$

The range of unbiased exponent E is $E_{min} - 1$ to $E_{max} + 1$. The two values $E_{min} - 1$ and $E_{max} + 1$ are distinguished as follows. $E_{min} - 1$ indicates zero (both positive and negative sign) and a denormalized number, and $E_{max} + 1$ indicates positive or negative infinity or a non-number (NaN). Table 3.1 shows E_{min} and E_{max} values.

chanhvinh.com

Table 3.1 Floating-Point Number Formats and Parameters

Parameter	Single-Precision	Double-Precision
Total bit width	32 bits	64 bits
Sign bit	1 bit	1 bit
Exponent field	8 bits	11 bits
Fraction field	23 bits	52 bits
Precision	24 bits	53 bits
Bias	+127	+1023
E_{max}	+127	+1023
E_{min}	–126	–1022

Floating-point number value v is determined as follows:

If $E = E_{max} + 1$ and $f \neq 0$, v is a non-number (NaN) irrespective of sign s

If $E = E_{max} + 1$ and $f = 0$, $v = (-1)^s$ (infinity) [positive or negative infinity]

If $E_{min} \leq E \leq E_{max}$, $v = (-1)^s 2^E$ (1.f) [normalized number]

If $E = E_{min} - 1$ and $f \neq 0$, $v = (-1)^s 2^{Emin}$ (0.f) [denormalized number]

If $E = E_{min} - 1$ and $f = 0$, $v = (-1)^s 0$ [positive or negative zero]

chanhvinh.com

Table 3.2 shows the ranges of the various numbers in hexadecimal notation.

Table 3.2 Floating-Point Ranges

Type	Single-Precision	Double-Precision
Signaling non-number	H'7FFF FFFF to H'7FC0 0000	H'7FFF FFFF FFFF FFFF to H'7FF8 0000 0000 0000
Quiet non-number	H'7FBF FFFF to H'7F80 0001	H'7FF7 FFFF FFFF FFFF to H'7FF0 0000 0000 0001
Positive infinity	H'7F80 0000	H'7FF0 0000 0000 0000
Positive normalized number	H'7F7F FFFF to H'0080 0000	H'7FEF FFFF FFFF FFFF to H'0010 0000 0000 0000
Positive denormalized number	H'007F FFFF to H'0000 0001	H'000F FFFF FFFF FFFF to H'0000 0000 0000 0001
Positive zero	H'0000 0000	H'0000 0000 0000 0000
Negative zero	H'8000 0000	H'8000 0000 0000 0000
Negative denormalized number	H'8000 0001 to H'807F FFFF	H'8000 0000 0000 0001 to H'800F FFFF FFFF FFFF
Negative normalized number	H'8080 0000 to H'FF7F FFFF	H'8010 0000 0000 0000 to H'FFEF FFFF FFFF FFFF
Negative infinity	H'FF80 0000	H'FFF0 0000 0000 0000
Quiet non-number	H'FF80 0001 to H'FFBF FFFF	H'FFF0 0000 0000 0001 to H'FFF7 FFFF FFFF FFFF
Signaling non-number	H'FFC0 0000 to H'FFFF FFFF	H'FFF8 0000 0000 0000 to H'FFFF FFFF FFFF FFFF

chanhvinh.com

3.2.2 Non-Numbers (NaN)

Figure 3.3 shows the bit pattern of a non-number (NaN). A value is NaN in the following case:

- Sign bit: Don't care
- Exponent field: All bits are 1
- Fraction field: At least one bit is 1

The NaN is a signaling NaN (sNaN) if the MSB of the fraction field is 1, and a quiet NaN (qNaN) if the MSB is 0.

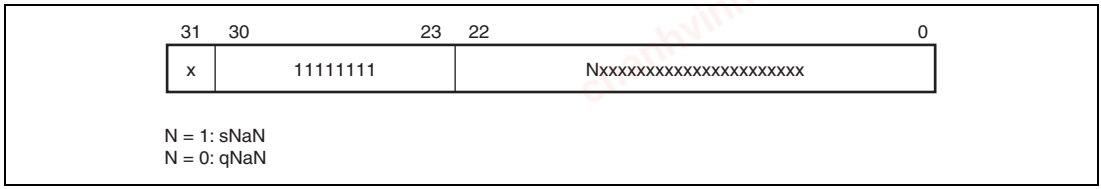

Figure 3.3 Single-Precision NaN Bit Pattern

An sNaN is input in an operation, except copy, FABS, and FNEG, that generates a floating-point value.

- When the EN.V bit in FPSCR is 0, the operation result (output) is a qNaN.
- When the EN.V bit in FPSCR is 1, an invalid operation exception will generate FPU exception processing. In this case, the contents of the operation destination register are unchanged.

If a qNaN is input in an operation that generates a floating-point value, and an sNaN has not been input in that operation, the output will always be a qNaN irrespective of the setting of the EN.V bit in FPSCR. An exception will not be generated in this case.

The qNAN values as operation results are as follows:

- Single-precision qNaN: H'7FBF FFFF
- Double-precision qNaN: H'7FF7 FFFF FFFF FFFF

See the individual instruction descriptions for details of floating-point operations when a non-number (NaN) is input.

chanhvinh.com

3.2.3 Denormalized Numbers

For a denormalized number floating-point value, the exponent field is expressed as 0, and the fraction field as a non-zero value.

In the SH2A-FPU, the DN bit in the status register FPSCR is always set to 1, therefore a denormalized number (source operand or operation result) is always flushed to 0 in a floating-point operation that generates a value (an operation other than copy, FNEG, or FABS).

When the DN bit in FPSCR is 0, a denormalized number (source operand or operation result) is processed as it is. See the individual instruction descriptions for details of floating-point operations when a denormalized number is input.

chanhvinh.com

3.3 Register Descriptions

3.3.1 Floating-Point Registers

Figure 3.4 shows the floating-point register configuration. There are sixteen 32-bit floating-point registers FPR0 to FPR15, referenced by specifying FR0 to FR15, DR0/2/4/6/8/10/12/14. The correspondence between FRPn and the reference name is determined by the PR and SZ bits in FPSCR. Refer figure 3.4.

1. Floating-point registers, FPRi (16 registers)
   FPR0 to FPR15
2. Single-precision floating-point registers, FRi (16 registers)
   FR0 to FR15 indicate FPR0 to FPR15
3. Double-precision floating-point registers or single-precision floating-point vector registers in pairs, DRi (8 registers)
   A DR register comprises two FR registers.
   DR0 = {FR0, FR1}, DR2 = {FR2, FR3}, DR4 = {FR4, FR5}, DR6 = {FR6, FR7},
   DR8 = {FR8, FR9}, DR10 = {FR10, FR11}, DR12 = {FR12, FR13}, DR14 = {FR14, FR15}

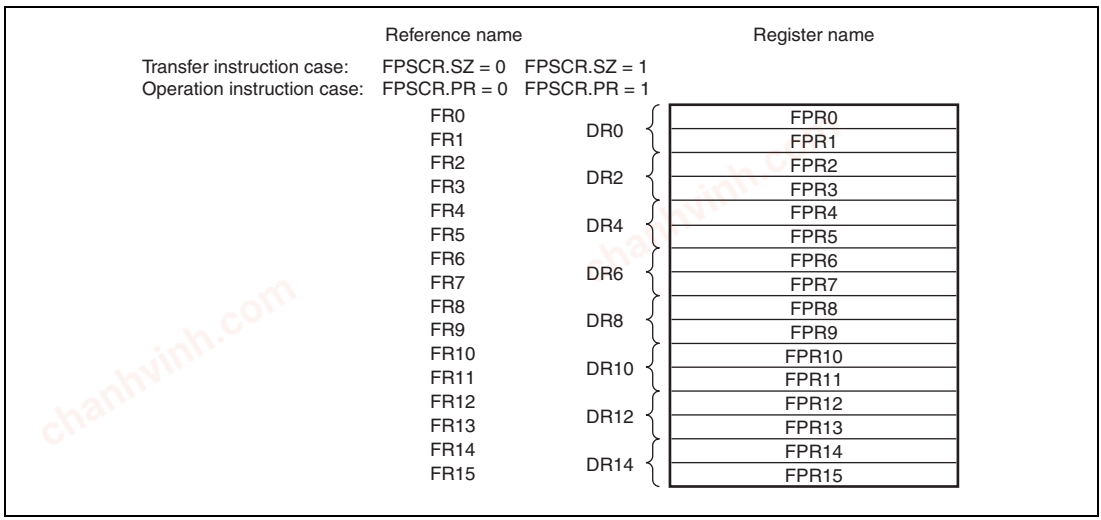

Figure 3.4 Floating-Point Registers

chanhvinh.com

3.3.2 Floating-Point Status/Control Register (FPSCR)

FPSCR is a 32-bit register that controls floating-point instructions, sets FPU exceptions, and selects the rounding mode.

Bit:	31	30	29	28	27	26	25	24	23	22	21	20	19	18	17	16
	-	-	-	-	-	-	-	-	-	QIS	-	SZ	PR	DN	Cause	
Initial value:	0	0	0	0	0	0	0	0	0	0	0	0	0	1	0	0
R/W:	R	R	R	R	R	R	R	R	R	R/W	R	R/W	R/W	R	R/W	R/W

Bit:	15	14	13	12	11	10	9	8	7	6	5	4	3	2	1	0
	Cause				Enable					Flag					RM1	RM0
Initial value:	0	0	0	0	0	0	0	0	0	0	0	0	0	0	0	1
R/W:	R/W	R/W	R/W	R/W	R/W	R/W	R/W	R/W	R/W	R/W	R/W	R/W	R/W	R/W	R/W	R/W

Bit	Bit Name	Initial Value	R/W	Description
31 to 23	—	All 0	R	Reserved These bits are always read as 0. The write value should always be 0.
22	QIS	0	R/W	Nonnunerical Processing Mode 0: Processes qNaN or ±∞ as such 1: Treats qNaN or ±∞ as the same as sNaN (valid only when FPSCR.Enable.V = 1)
21	—	0	R	Reserved This bit is always read as 0. The write value should always be 0.
20	SZ	0	R/W	Transfer Size Mode 0: Data size of FMOV instruction is 32-bits 1: Data size of FMOV instruction is a 32-bit register pair (64 bits)
19	PR	0	R/W	Precision Mode 0: Floating-point instructions are executed as single-precision operations 1: Floating-point instructions are executed as double-precision operations (graphics support instructions are undefined)
18	DN	1	R	Denormalization Mode (Always fixed to 1 in SH2A-FPU) 1: Denormalized number is treated as zero

chanhvinh.com

Bit	Bit Name	Initial Value	R/W	Description
17 to 12	Cause	H'00	R/W	FPU Exception Cause Field
11 to 7	Enable	H'00	R/W	FPU Exception Enable Field
6 to 2	Flag	H'00	R/W	FPU Exception Flag Field Each time floating-point operation instruction is executed, the FPU exception cause field is cleared to 0 first. When an FPU exception on floating-point operation occurs, the bits corresponding to the FPU exception cause field and FPU exception flag field are set to 1. The FPU exception flag field remains set to 1 until it is cleared to 0 by software. As the bits corresponding to FPU exception enable filed are sets to 1, FPU exception processing occurs. For bit allocations of each field, see table 3.3.
1	RM1	0	R/W	Rounding Mode
0	RM0	1	R/W	These bits select the rounding mode. 00: Round to Nearest 01: Round to Zero 10: Reserved 11: Reserved

Table 3.3 Bit Allocation for FPU Exception Handling

Field Name		FPU Error (E)	Invalid Operation (V)	Division by Zero (Z)	Overflow (O)	Underflow (U)	Inexact (I)
Cause	FPU exception cause field	Bit 17	Bit 16	Bit 15	Bit 14	Bit 13	Bit 12
Enable	FPU exception enable field	None	Bit 11	Bit 10	Bit 9	Bit 8	Bit 7
Flag	FPU exception flag field	None	Bit 6	Bit 5	Bit 4	Bit 3	Bit 2

Note: No FPU error occurs in the SH2A-FPU.

chanhvinh.com

3.3.3 Floating-Point Communication Register (FPUL)

Information is transferred between the FPU and CPU via FPUL. FPUL is a 32-bit system register that is accessed from the CPU side by means of LDS and STS instructions. For example, to convert the integer stored in general register R1 to a single-precision floating-point number, the processing flow is as follows:

R1 → (LDS instruction) → FPUL → (single-precision FLOAT instruction) → FR1

chanhvinh.com

3.4 Rounding

In a floating-point instruction, rounding is performed when generating the final operation result from the intermediate result. Therefore, the result of combination instructions such as FMAC will differ from the result when using a basic instruction such as FADD, FSUB, or FMUL. Rounding is performed once in FMAC, but twice in FADD, FSUB, and FMUL.

Which of the two rounding methods is to be used is determined by the RM bits in FPSCR.

FPSCR.RM[1:0] = 00: Round to Nearest
FPSCR.RM[1:0] = 01: Round to Zero

(1) Round to Nearest

The operation result is rounded to the nearest expressible value. If there are two nearest expressible values, the one with an LSB of 0 is selected.

If the unrounded value is $2^{Emax} (2 - 2^{-P})$ or more, the result will be infinity with the same sign as the unrounded value. The values of Emax and P, respectively, are 127 and 24 for single-precision, and 1023 and 53 for double-precision.

(2) Round to Zero

The digits below the round bit of the unrounded value are discarded.

If the unrounded value is larger than the maximum expressible absolute value, the value will become the maximum expressible absolute value.

chanhvinh.com

3.5 FPU Exceptions

3.5.1 FPU Exception Sources

FPU exceptions may occur on floating-point operation instruction and the exception sources are as follows:

- FPU error (E): When FPSCR.DN = 0 and a denormalized number is input (No error occurs in the SH2A-FPU)
- Invalid operation (V): In case of an invalid operation, such as NaN input
- Division by zero (Z): Division with a zero divisor
- Overflow (O): When the operation result overflows
- Underflow (U): When the operation result underflows
- Inexact exception (I): When overflow, underflow, or rounding occurs

The FPU exception cause field in FPSCR contains bits corresponding to all of above sources E, V, Z, O, U, and I, and the FPU exception flag and enable fields in FPSCR contain bits corresponding to sources V, Z, O, U, and I, but not E. Thus, FPU errors cannot be disabled.

When an FPU exception occurs, the corresponding bit in the FPU exception cause field is set to 1, and 1 is added to the corresponding bit in the FPU exception flag field. When an FPU exception does not occur, the corresponding bit in the FPU exception cause field is cleared to 0, but the corresponding bit in the FPU exception flag field remains unchanged.

3.5.2 FPU Exception Handling

FPU exception handling is initiated in the following cases:

- FPU error (E): FPSCR.DN = 0 and a denormalized number is input (No error occurs in the SH2A-FPU)
- Invalid operation (V): FPSCR.Enable.V = 1 and invalid operation
- Division by zero (Z): FPSCR.Enable.Z = 1 and division with a zero divisor
- Overflow (O): FPSCR.Enable.O = 1 and instruction with possibility of operation result overflow
- Underflow (U): FPSCR.Enable.U = 1 and instruction with possibility of operation result underflow
- Inexact exception (I): FPSCR.Enable.I = 1 and instruction with possibility of inexact operation result

chanhvinh.com

These possibilities of each exceptional handling on floating-point operation are shown in the individual instruction descriptions. All exception events that originate in the floating-point operation are assigned as the same FPU exceptional handling event. The meaning of an exception generated by floating-point operation is determined by software by reading from FPSCR and interpreting the information it contains. Also, the destination register is not changed when FPU exception handling operation occurs.

Except for the above, the FPU disables exception handling. In every processing, the bit corresponding to source V, Z, O, U, or I is set to 1, and a default value is generated as the operation result.

- Invalid operation (V): qNaN is generated as the result.
- Division by zero (Z): Infinity with the same sign as the unrounded value is generated.
- Overflow (O):
  When rounding mode = RZ, the maximum normalized number, with the same sign as the unrounded value, is generated.
  When rounding mode = RN, infinity with the same sign as the unrounded value is generated.
- Underflow (U):
  Zero with the same sign as the unrounded value is generated.
- Inexact exception (I): An inexact result is generated.

chanhvinh.com

chanhvinh.com
chanhvinh.com
chanhvinh.com

chanhvinh.com

Section 4 Boot Mode

This LSI can be booted from the memory connected to the CS0 space, the NAND flash memory, the serial flash memory, the NAND flash memory with an SD controller, and the NAND flash memory with an MMC controller.

4.1 Features

- Six boot modes
  Boot mode 0: Boots the LSI from the memory (bus width: 16 bits) connected to the CS0 space
  Boot mode 1: Boots the LSI from the memory (bus width: 32 bits) connected to the CS0 space
  Boot mode 2: Boots the LSI from the NAND flash memory
  Boot mode 3: Boots the LSI from the serial flash memory
  Boot mode 4: Boots the LSI from the NAND flash memory with the SD controller*[1]
  Boot mode 5: Boots the LSI from the NAND flash memory with the MMC controller*[2]

Notes: 1. It is possible to boot the LSI from the embedded SD (eSD) defined by the SD specification part 1 eSD addendum version 2.10 standard.
2. It is possible to boot the LSI from the eMMC device corresponding to the boot operating mode of the JEDEC standard JESD84 A44 (MMCA 4.4) Standard. (It is not possible to boot the LSI from the MMC card.)

chanhvinh.com

4.2 Boot Mode and Pin Function Setting

This LSI can determine the boot mode using external pins when $\overline{\text{RES}}$ is low. The external pin settings for selecting the boot mode are shown in table 4.1.

Table 4.1 External Pin (MD_BOOT2 to MD_BOOT0) Settings and Corresponding Boot Modes

MD_BOOT2	MD_BOOT1	MD_BOOT0	Boot Mode
*	0	0	Boot Mode 0 Boots the LSI from the memory (bus width: 16 bits) connected to the CS0 space.
*	1	0	Boot Mode 1 Boots the LSI from the memory (bus width: 32 bits) connected to the CS0 space.
0	0	1	Boot Mode 2 Boots the LSI from the NAND flash memory connected to the NAND flash memory controller.
1	0	1	Boot Mode 3 Boots the LSI from the serial flash memory connected to channel 0 (PB20 to PB17) of the Renesas serial peripheral interface. Booting this LSI chip over the channel 0 (PJ19 to PJ16) of the Renesas serial peripheral interface is impossible.
0	1	1	Boot Mode 4 Boots the LSI from the flash memory with the SD controller connected to channel 0 of the SD host interface.
1	1	1	Boot Mode 5 Boots the LSI from the flash memory with the MMC controller connected to the MMC host interface.

chanhvinh.com

4.3 Operation

4.3.1 Boot Modes 0 and 1

In boot modes 0 and 1, this LSI is booted from the memory connected to the CS0 space. In this mode, this LSI operates as follows:

After the power-on reset is canceled, the initial value (execution start address) of the program counter (PC) and the initial value of the stack pointer (SP) are fetched from the exception handling vector table located in the memory connected to the CS0 space, then program execution is started.

4.3.2 Boot Mode 2

In boot mode 2, booting up is from NAND flash memory, which is connected to the NAND flash memory controller. Suitable NAND flash memory has a large block size (2048 + 64) and takes five-byte addresses (has a capacity of 2 GB or greater). The flow of initiation in boot mode 2 is as described below.

(1) Execution from on-Chip ROM of the Program for Boot Initiation

After release from the power-on reset state, the CPU executes the boot initiation program that has been stored in on-chip ROM (and is not publicly disclosed).

(2) Transfer of the Loader Program

The 8-KB loader program is transferred from NAND flash memory, which is connected to the NAND flash memory controller, to the first location of the high-speed on-chip RAM. Transfer and checking by the loader program proceed as follows.

(a) A search is conducted to find the block which holds the loader program. Block addresses 0 to 1023 (max.)

(b) The 8-KB (16-sector) loader program is read out and transferred to high-speed on-chip RAM.

Once transfer of the loader program has been completed, execution by the CPU jumps to high-speed on-chip RAM so that it can start executing the transferred loader program.

chanhvinh.com

(3) Transfer of an Application Program (as Desired)

The loader program employs the NAND flash memory controller to transfer the data to be deployed from NAND flash memory to on-chip RAM or external RAM.

Figure 4.1 is a schematic view of the specifications for boot mode 2.

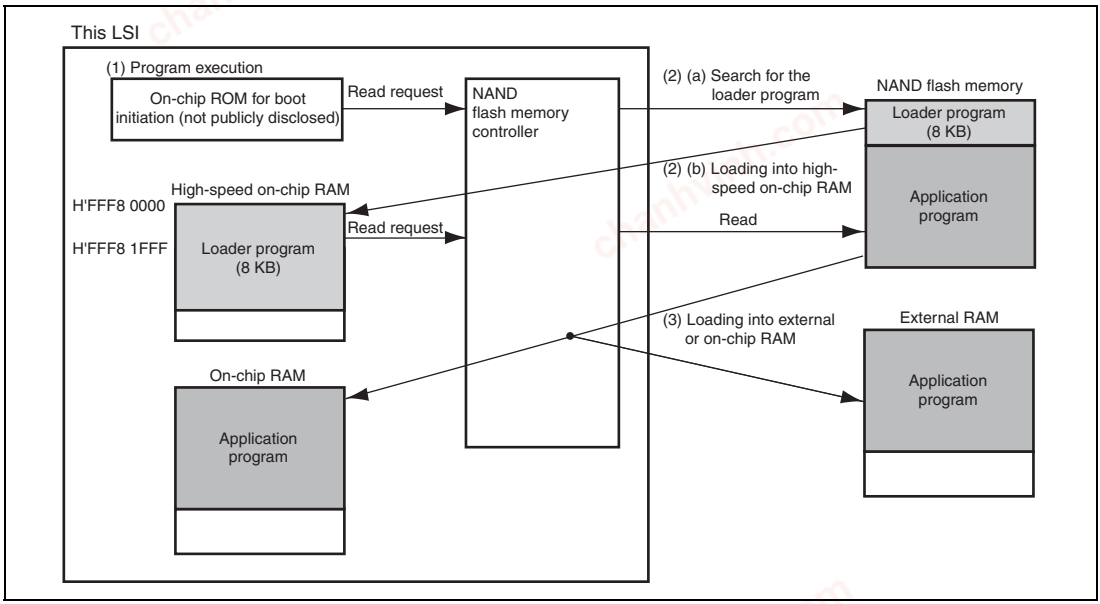

Figure 4.1 Schematic View of Specification for Boot Mode 2

chanhvinh.com

Figure 4.2 shows the locations where the loader program is stored.

Store the loader program in sectors 0 to 15 of the loader block. Read out the loader program in sectors.

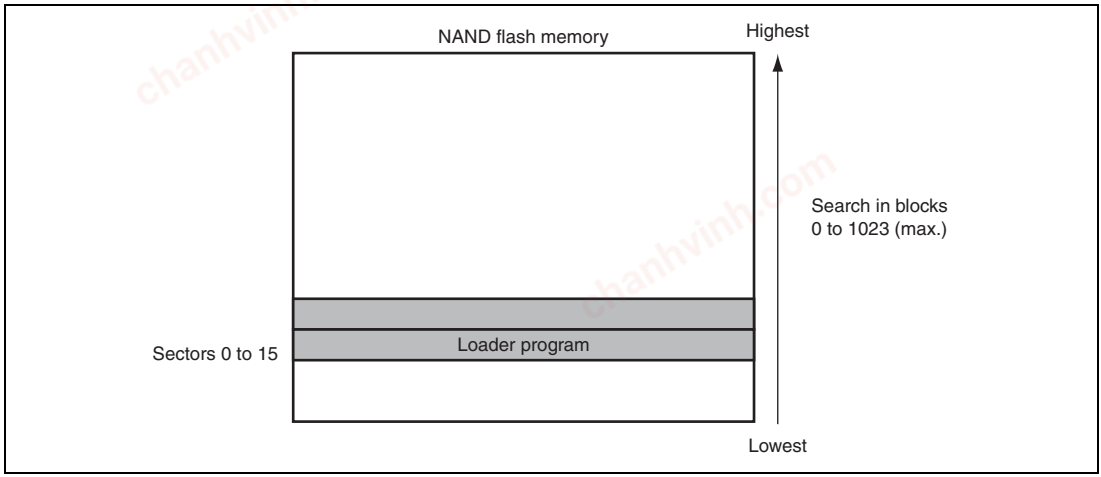

Figure 4.2 Locations where the Loader Program is Stored

4.3.3 Boot Mode 3

In boot mode 3, booting up is from serial flash memory, which is connected to channel 0 of the Renesas serial peripheral interface. The flow of initiation in boot mode 3 is as described below.

(1) Execution from on-Chip ROM of the Program for Boot Initiation

After release from the power-on reset state, the CPU executes the boot initiation program that has been stored in on-chip ROM (and is not publicly disclosed).

(2) Transfer of the Loader Program

Starting with transfer from the respective first locations, the 8-KB loader program is transferred from serial flash memory, which is connected to channel 0 of the Renesas serial peripheral interface, to high-speed on-chip RAM.

Once transfer of the loader program has been completed, execution by the CPU jumps to high-speed on-chip RAM so that it can start executing the transferred loader program.

chanhvinh.com

(3) Transfer of an Application Program (as Desired)

The loader program employs the Renesas serial peripheral interface to transfer the data to be deployed from serial flash memory to on-chip RAM or external RAM.

Figure 4.3 is a schematic view of the specification for boot mode 3.

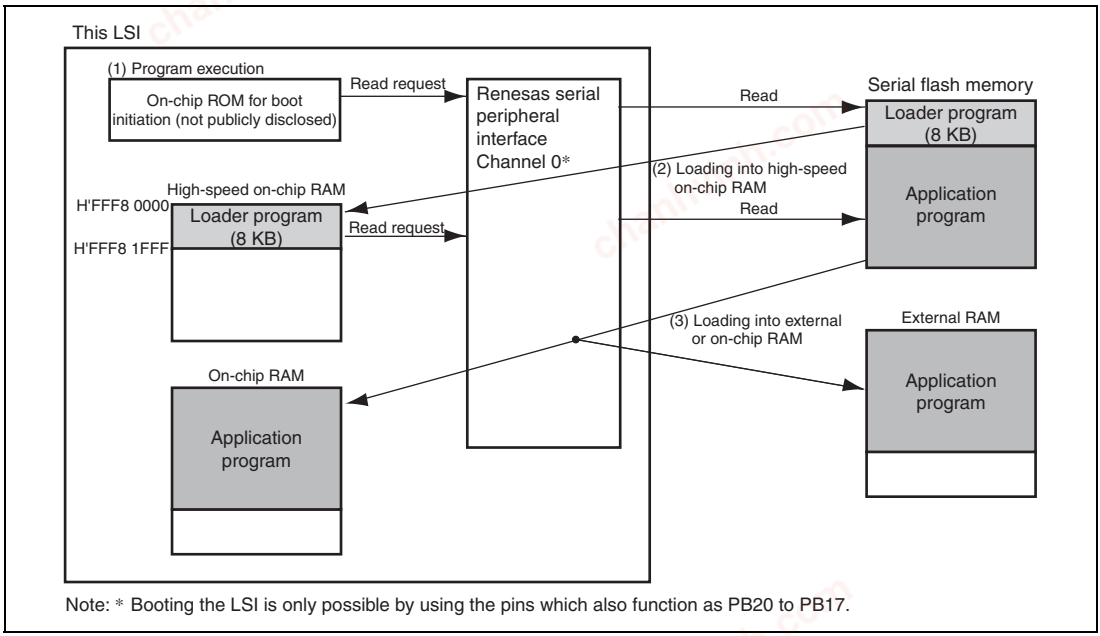

Figure 4.3 Schematic View of Specification for Boot Mode 3

chanhvinh.com

4.3.4 Boot Mode 4

In boot mode 4, booting up is from flash memory with the SD controller, which is connected to channel 0 of the SD host interface. The flow of initiation in boot mode 4 is as described below.

(1) Execution from on-Chip ROM of the Program for Boot Initiation

After release from the power-on reset state, the CPU executes the boot initiation program that has been stored in on-chip ROM (and is not publicly disclosed).

(2) Transfer of the Loader Program

The 16-KB loader program is transferred from flash memory with the SD controller, which is connected to channel 0 of the SD host interface, to the first location (page 0) of the high-speed on-chip RAM. Page 1 of the high-speed on-chip RAM is also used as the work memory for boot process.

Once transfer of the loader program has been completed, execution by the CPU jumps to page 0 of the high-speed on-chip RAM so that it can start executing the transferred loader program.

(3) Transfer of an Application Program (as Desired)

The loader program employs the SD host interface to transfer the data to be deployed from flash memory with the SD controller to on-chip RAM or external RAM.

chanhvinh.com

Figure 4.4 is a schematic view of the specification for boot mode 4.

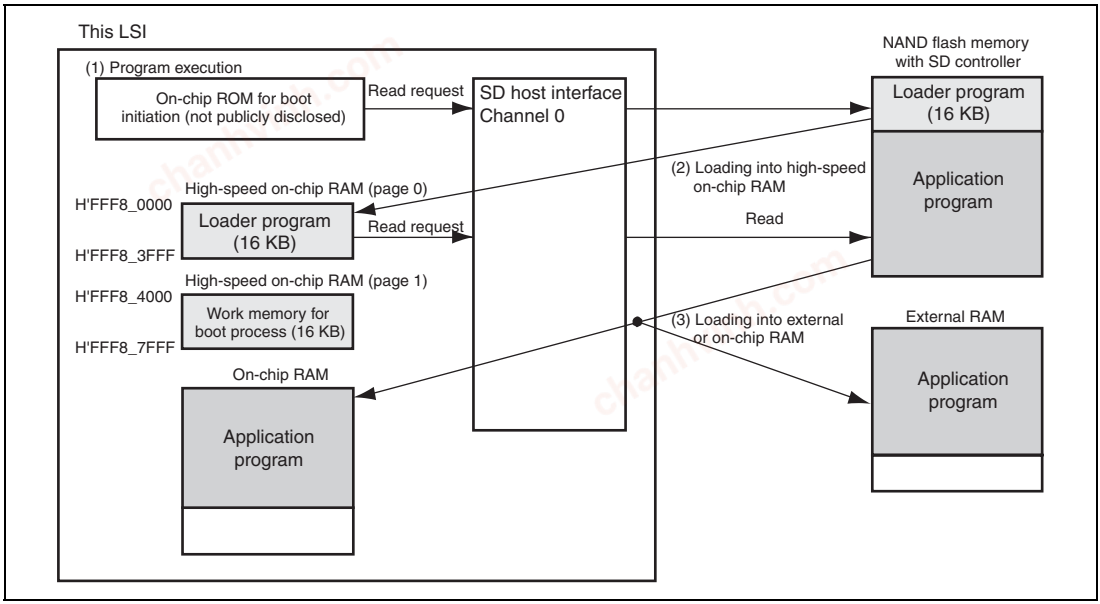

Figure 4.4 Schematic View of Specification for Boot Mode 4

4.3.5 Boot Mode 5

In boot mode 5, booting up is from flash memory with the MMC controller, which is connected to the MMC host interface. The flow of initiation in boot mode 5 is as described below.

(1) Execution from on-Chip ROM of the Program for Boot Initiation

After release from the power-on reset state, the CPU executes the boot initiation program that has been stored in on-chip ROM (and is not publicly disclosed).

(2) Transfer of the Loader Program

The 16-KB loader program is transferred from flash memory with the MMC controller, which is connected to the MMC host interface, to the first location (page 0) of the high-speed on-chip RAM with the MMC data bus width of 4 bits. Page 1 of the high-speed on-chip RAM is also used as the work memory for boot process.

Once transfer of the loader program has been completed, execution by the CPU jumps to page 0 of the high-speed on-chip RAM so that it can start executing the transferred loader program.

chanhvinh.com

(3) Transfer of an Application Program (as Desired)

The loader program employs the MMC host interface to transfer the data to be deployed from flash memory with the MMC controller to on-chip RAM or external RAM.

Figure 4.5 is a schematic view of the specification for boot mode 5.

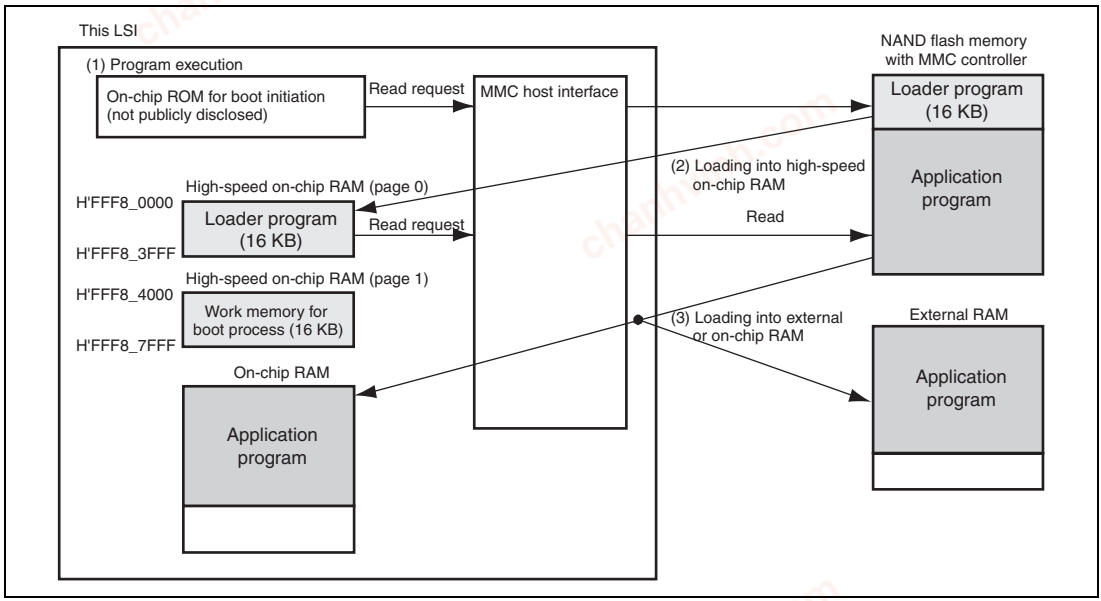

Figure 4.5 Schematic View of Specification for Boot Mode 5

chanhvinh.com

4.4 Notes

4.4.1 Boot Related Pins

The initial states and output states in deep standby mode of the pins related to CS0 space memory read, NAND flash memory controller, channel 0 of the Renesas serial peripheral interface, channel 0 of the SD host interface, and the MMC host interface are different in each boot mode.

For details, refer to section 10, Bus State Controller, section 48, General Purpose I/O Ports, and section 49, Power-Down Modes.

chanhvinh.com

Section 5 Clock Pulse Generator

This LSI has a clock pulse generator that generates a CPU clock (Iϕ), internal bus clock (Bϕ), peripheral clock 0 (P0ϕ), and peripheral clock 1 (P1ϕ). The clock pulse generator consists of a crystal oscillator, PLL circuits, and divider circuits.

5.1 Features

- Four clocks generated independently

  A CPU clock (Iϕ) for the CPU and cache; an internal bus clock (Bϕ) for the I-Bus; peripheral clock 0 (P0ϕ) for the on-chip peripheral modules; peripheral clock 1 (P1ϕ = CKIO) for the external bus interface
- Frequency change function

  CPU and internal bus clock frequencies can be changed independently using the PLL (phase locked loop) circuits and divider circuits within this module. Frequencies are changed by software using frequency control register (FRQCR) settings.
- Power-down mode control

  The clock can be stopped in sleep mode, software standby mode, and deep standby mode, and specific modules can be stopped using the module standby function. For details on clock control in the power-down modes, see section 49, Power-Down Modes.
- SSCG function

  The CPU's internal PLL (phase locked loop) circuit includes an SSCG (spread spectrum clock generator).

  The SSCG can be used to decrease the peak value of EMI (electromagnetic interference) noise by frequency modulation, that is, by slightly modulating the output frequency.

  The specification of the SSCG for this LSI is as follows.

  — Specification of SSCG

  (1) Modulation waveform (modulation profile) : Triangle wave

  (2) Type of spreading : Down-spreading

  (3) Modulation rate : -2.5% (fixed)

  (4) Modulation frequency : 20.00 to 26.67 KHz (frequency on the EXTAL pin ÷ 500)

chanhvinh.com

Figure 5.1 shows a block diagram of the clock pulse generator.

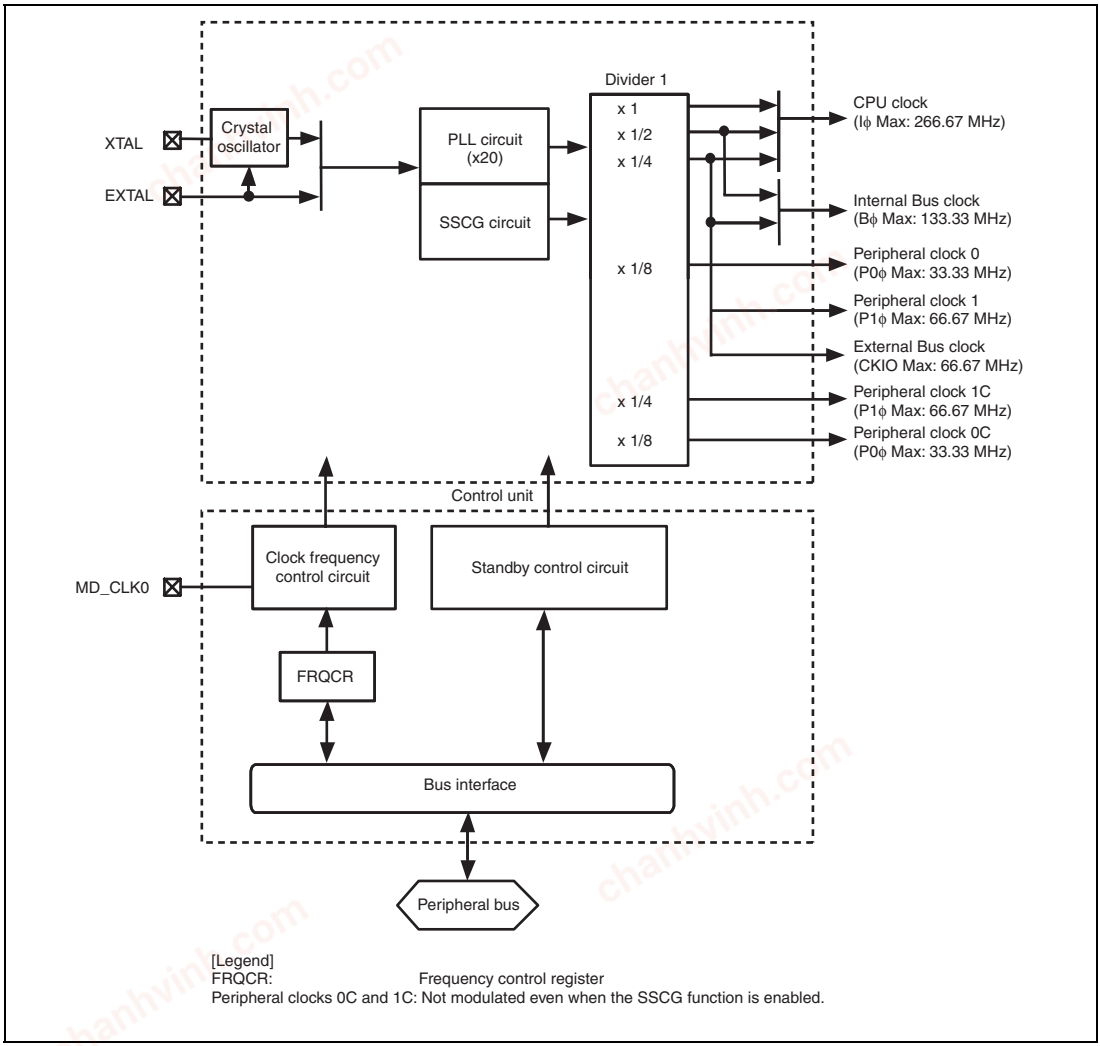

Figure 5.1 Block Diagram

chanhvinh.com

The blocks of this module function as follows:

(1) Crystal Oscillator

The crystal oscillator is used in which the crystal resonator is connected to the XTAL/EXTAL pin.

(2) PLL Circuit

The PLL circuit is capable of multiplying the frequency of the input clock signal from the crystal oscillator or EXTAL pin by 20.

(3) Divider 1

Divider 1 generates a clock signal whose operating frequency can be used for the CPU clock, internal bus clock, peripheral clock 0, and peripheral clock 1. The division ratio of the CPU clock and the internal bus clock is set by the frequency control register. The division ratios for peripheral clocks 1 and 0 are fixed to 1/4 and 1/8, respectively.

(4) Clock Frequency Control Circuit

The clock frequency control circuit controls the clock frequency using the frequency control register (FRQCR).

(5) Standby Control Circuit

The standby control circuit controls the states of the on-chip oscillation circuit and other modules during clock switching, or sleep, software standby or deep standby mode.

In addition, the standby control register is provided to control the power-down mode of other modules. For details on the standby control register, see section 49, Power-Down Modes.

(6) Frequency Control Register (FRQCR)

The frequency control register (FRQCR) has control bits assigned for the following functions: clock output/non-output from the CKIO pin during software standby mode and the frequency division ratio of the CPU clock (Iϕ) and the internal bus clock (Bϕ).

chanhvinh.com

(7) SSCG Circuit

Operation of the SSCG circuit is switched on or off (enabled or disabled) by the MD_CLK0 pin. When the SSCG function is disabled, all of the internal clock frequencies are fixed, i.e. not modulated. When the SSCG function is enabled, the frequencies of clock signals supplied to peripheral modules other than those listed below are modulated.

Peripheral modules to which non-modulated clock signals are supplied:
IEBus controller, multi-function timer pulse unit 2, serial communications interface with FIFO, controller area network, compare match timer, motor control PWM timer, and sound generator.

chanhvinh.com

5.2 Input/Output Pins

Table 5.1 lists the clock pulse generator pins and their functions.

Table 5.1 Pin Configuration and Functions of the Clock Pulse Generator

Pin Name	Symbol	I/O	Function
Mode control pin	MD_CLK0	Input	Enables or disables the SSCG circuit.
Crystal input/output pins (clock input pins)	XTAL	Output	Connected to the crystal resonator. (Leave this pin open when the crystal resonator is not in use.)
	EXTAL	Input	Connected to the crystal resonator or used to input external clock.
Clock output pin	CKIO	Output	Clock output pin.

chanhvinh.com

5.3 Clock Mode

Table 5.2 indicates the input/output clock frequency. Table 5.3 shows the usable frequency ranges.

Table 5.2 Input/Output Clock Frequency

Clock I/O		PLL Circuit	
Source	**Output**	**On/Off**	**CKIO Frequency**
EXTAL or crystal resonator	CKIO	ON (×20)	(EXTAL or crystal resonator) × 5

Clock is input from the EXTAL pin or the crystal oscillator. The PLL circuit shapes waveforms and multiples the frequency, and then supplies the clock to the LSI. The oscillating frequency for the crystal resonator and EXTAL pin input clock ranges from 10 to 13.333 MHz. The frequency range of CKIO is from 50 to 66.67 MHz.

chanhvinh.com

Table 5.3 Settable Frequency Ranges

FRQCR Setting*1	PLL Frequency Multiplier: PLL Circuit	Ratio of Internal Clock Frequencies (I : B : P1 : P0)*2	Selectable Frequency Range (MHz): Input Clock*3	Output Clock (CKIO Pin)	CPU Clock (Iϕ)	Internal Bus Clock (Bϕ)	Peripheral Clock 1 (P1ϕ)	Peripheral Clock 0 (P0ϕ)
H'x015	ON (×20)	20 : 10 : 5 : 5/2	10 to 13.333	50 to 66.67	200 to 266.66	100 to 133.33	50 to 66.67	25 to 33.33
H'x035	ON (×20)	20 : 5 : 5 : 5/2	10 to 13.333	50 to 66.67	200 to 266.66	50 to 66.67	50 to 66.67	25 to 33.33
H'x115	ON (×20)	10 : 10 : 5 : 5/2	10 to 13.333	50 to 66.67	100 to 133.33	100 to 133.33	50 to 66.67	25 to 33.33
H'x135	ON (×20)	10 : 5 : 5 : 5/2	10 to 13.333	50 to 66.67	100 to 133.33	50 to 66.67	50 to 66.67	25 to 33.33
H'x335	ON (×20)	5 : 5 : 5 : 5/2	10 to 13.333	50 to 66.67	50 to 66.67	50 to 66.67	50 to 66.67	25 to 33.33

Notes: 1. x in the FRQCR register setting depends on the set value in bits 12, 13, and 14.
2. The ratio of clock frequencies, where the input clock frequency is assumed to be 1.
3. The frequency of the EXTAL pin input clock or the crystal resonator

Caution: Do not use this LSI for frequency settings other than those in table 5.3.

The SSCG function of the chip is switched on or off by the setting of the MD_CLK0 pin while the $\overline{\text{RES}}$ pin is being held low. The following table shows the correspondence between SSCG operation and pin settings. Note that the pin setting does not affect the PLL frequency multipliers and division ratios for individual clock signals.

Table 5.4 SSCG Operation Setting

MD_CLK0 Pin Setting	SSCG Operation
0	Off
1	On

chanhvinh.com

5.4 Register Descriptions

Table 5.5 shows the register configuration of the clock pulse generator.

Table 5.5 Register Configuration

Register Name	Abbreviation	R/W	Initial Value	Address	Access Size
Frequency control register	FRQCR	R/W	H'0335	H'FFFE0010	16

5.4.1 Frequency Control Register (FRQCR)

FRQCR is a 16-bit readable/writable register used to specify whether a clock is output from the CKIO pin during normal operation mode, release of bus mastership, change of gain of crystal oscillator for the XTAL pin, software standby mode, and standby mode cancellation. The register specifies the frequency division ratio for the CPU clock (Iϕ) and internal bus clock (Bϕ). FRQCR is accessed by word.

Bit:	15	14	13	12	11	10	9	8	7	6	5	4	3	2	1	0
	-	CKOEN2	CKOEN[1:0]		-	-	IFC[1:0]		-	-	BFC[1:0]		-	-	-	-
Initial value:	0	0	0	0	0	0	1	1	0	0	1	1	0	1	0	1
R/W:	R	R/W	R/W	R/W	R	R	R/W	R/W	R	R	R/W	R/W	R	R	R	R

Bit	Bit Name	Initial Value	R/W	Description
15	—	0	R	Reserved This bit is always read as 0. The write value should always be 0.
14	CKOEN2	0	R/W	Clock Output Enable 2 Specifies whether the CKIO pin outputs clock signals or is fixed to the low level when the gain of the crystal oscillator for the XTAL pin is changed. If this bit is set to 1, the CKIO pin is fixed to the low level when the gain of the crystal oscillator for the XTAL pin is changed. Therefore, the malfunction of an external circuit caused by an unstable CKIO clock while changing the gain of the crystal oscillator for the XTAL pin can be prevented. 0: Unstable clock output 1: Low-level output

chanhvinh.com

Bit	Bit Name	Initial Value	R/W	Description
13, 12	CKOEN[1:0]	00	R/W	Clock Output Enable These bits specify whether the CKIO pin outputs clock signals, or is set to a fixed level or high impedance (Hi-Z) during normal operation mode, release of bus mastership, deep standby mode, standby mode, or cancellation of standby mode. If these bits are set to 01, the CKIO pin is fixed at low during deep standby mode, software standby mode, or cancellation of software standby mode. Therefore, the malfunction of an external circuit caused by an unstable CKIO clock during cancellation of software standby mode can be prevented. Table 5.6 lists CKOEN[1:0] settings.
11, 10	—	All 0	R	Reserved These bits are always read as 0. The write value should always be 0.
9, 8	IFC[1:0]	11	R/W	CPU Clock Frequency Division Ratio These bits specify the frequency division ratio of the CPU clock with respect to the output frequency of PLL circuit. 00: 1 time 01: 1/2 time 10: Reserved (setting prohibited) 11: 1/4 time
7, 6	—	0	R	Reserved These bits are always read as 0. The write value should always be 0.
5, 4	BFC[1:0]	11	R/W	Internal Bus Clock Frequency Division Ratio These bits specify the frequency division ratio of the internal bus clock with respect to the output frequency of PLL circuit. 00: Reserved (setting prohibited) 01: 1/2 time 10: Reserved (setting prohibited) 11: 1/4 time
3	—	0	R	Reserved This bit is always read as 0. The write value should always be 0.

chanhvinh.com

Bit	Bit Name	Initial Value	R/W	Description
2	—	1	R	Reserved This bit is always read as 1. The write value should always be 1.
1	—	0	R	Reserved This bit is always read as 0. The write value should always be 0.
0	—	1	R	Reserved This bit is always read as 1. The write value should always be 1.

Table 5.6 CKOEN[1:0] Settings

Setting	Normal Operation	Release of Bus Mastership	Software Standby Mode	Deep Standby Mode*
00	Output	Output off (Hi-Z)	Output off (Hi-Z)	Output off (Hi-Z)
01	Output	Output	Low-level output	Low-level output
10	Output	Output	Output (unstable clock output)	Low-level or high-level output
11	Output off (Hi-Z)	Output off (Hi-Z)	Output off (Hi-Z)	Output off (Hi-Z)

Note: * Note that the first cycle of the output CKIO clock may be missing after release from deep standby.

chanhvinh.com

5.5 Changing the Frequency

The frequency of the CPU clock (Iϕ) and internal bus clock (Bϕ) can be changed by changing the division rate of divider. The division rate can be changed by software through the frequency control register (FRQCR).

5.5.1 Changing the Division Ratio

The division rate of divider can be changed by the following operation.

1. In the initial state, IFC[1:0] = B'11 and BFC[1:0] = B'11.
2. Set the desired value in the IFC[1:0] and BFC[1:0] bits. Note that if the wrong value is set, this LSI will malfunction.
3. After the register bits (IFC[1:0] and BFC[1:0]) have been set, the clock is supplied of the new division ratio.

Note: When executing the SLEEP instruction after the frequency has been changed, be sure to read the frequency control register (FRQCR) three times before executing the SLEEP instruction.

chanhvinh.com

5.6 Usage of the Clock Pins

For the connection of a crystal resonator or the input of a clock signal, this LSI circuit has the pins listed in table 5.7. With regard to these pins, take care on the following points. Furthermore, Xin pin and Xout pin are used in this section to refer to the pins listed in the table.

Table 5.7 Clock Pins

Xin Pins (Used for Connection of a Crystal Resonator and Input of External Clock Signals)	Xout Pins (Used for Connection of a Crystal Resonator)
EXTAL	XTAL
USB_X1	USB_X2
AUDIO_X1	AUDIO_X2
RTC_X1	RTC_X2
VIDEO_X1	VIDEO_X2

5.6.1 In the Case of Inputting an External Clock

An example of the connection of an external clock is shown in figure 5.2. In cases where the Xout pin is left open state, take the parasitic capacitance as less than 10 pF.

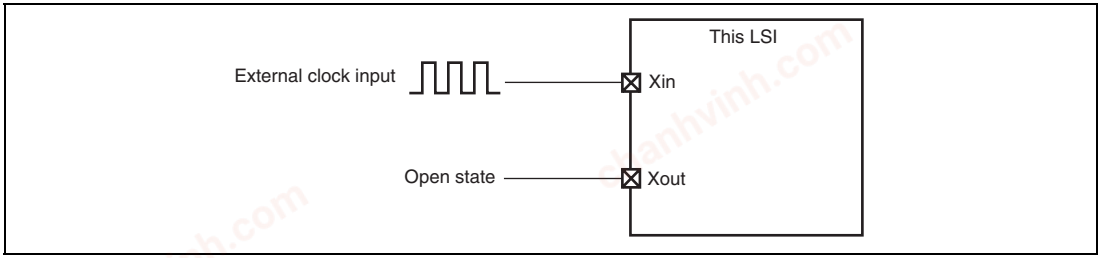

Figure 5.2 Example of the Connection of an External Clock

chanhvinh.com

5.6.2 In the Case of Using a Crystal Resonator

An example of the connection of crystal resonator is shown in figure 5.3.

Place the crystal resonator and capacitors (CL1 and CL2) as close to pins Xin and Xout as possible. Furthermore, to avoid inductance so that oscillation is correct, use the points where the capacitors are connected to the crystal resonator in common and do not place wiring patterns close to these components.

Since the design of the user board is closely connected with the effective characteristics of the crystal resonator, refer to the example of connection of the crystal resonator that is introduced in this section and perform thorough evaluation on the user side as well. The rated value of the crystal resonator will vary with the floating capacitances and so on of the crystal resonator and mounted circuit, so proceed with decisions on the basis of full discussions with the maker of the crystal resonator. Ensure that voltages applied to the clock pins do not exceed the maximum rated values.

Although the feedback resistor is included in this LSI, an external feedback resistor may be required in some cases. This depends on the characteristics of the crystal resonator.

Set the parameters (of resistors and capacitors) with thorough evaluation on the user side.

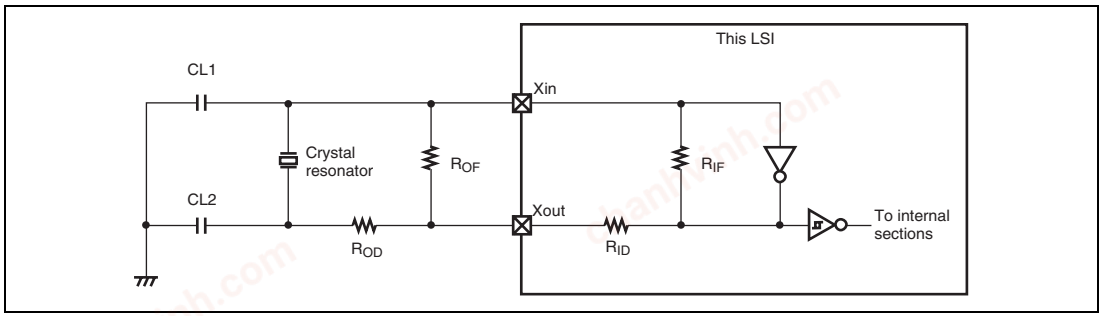

Figure 5.3 Example of the Connection of a Crystal Resonator

5.6.3 In the Case of Not Using the Clock Pin

In cases where the pins are not in use, fix the level on the Xin pin (pull it up or down, or connect it to the power-supply or ground level), and leave the Xout pin open state.

chanhvinh.com

5.7 Oscillation Stabilizing Time

5.7.1 Oscillation Stabilizing Time of the On-chip Crystal Oscillator

In the case of using a crystal resonator, please wait longer than the oscillation stabilizing time at the following cases, to keep the oscillation stabilizing time of the on-chip crystal oscillator (In the case of inputting an external clock input, it is not necessary).

- Power on
- Releasing the software standby mode or deep standby mode by $\overline{\text{RES}}$ pin
- Changing from halting oscillation to running oscillation by power-on reset or register setting (AUDIO_X1, RTC_X1)
- Changing the gain of the on-chip crystal oscillator by $\overline{\text{RES}}$ pin (EXTAL)

5.7.2 Oscillation Stabilizing Time of the PLL circuit

The clock from EXTAL is supplied to the PLL circuit. So, regardless of whether using a crystal resonator or inputting an external clock from EXTAL, please wait longer than the oscillation stabilizing time at the following cases, to keep the oscillation stabilizing time of the PLL circuit.

- Power on (in the case of using the crystal resonator)/start inputting external clock (in the case of inputting the external clock)
- Releasing the software standby mode or deep standby mode by $\overline{\text{RES}}$ pin

[Remarks]

The oscillation stabilizing time is kept by the counter running in the LSI at the following cases.

- Releasing the software standby mode or deep standby mode by the other than $\overline{\text{RES}}$ pin
- Changing the gain of the on-chip crystal oscillator by the register setting (EXTAL)

chanhvinh.com

5.8 Notes on Board Design

5.8.1 Note on Using a PLL Oscillation Circuit

In the PLLVcc connection pattern for the PLL, signal lines from the board power supply pins must be as short as possible and pattern width must be as wide as possible to reduce inductive interferences.

Since the analog power supply pins of the PLL are sensitive to the noise, the system may malfunction due to inductive interference at the other power supply pins. To prevent such malfunction, the analog power supply pins and the digital power supply pins Vcc and PVcc should not supply the same resources on the board if at all possible.

Ensure that PLLVcc has the same electric potential as PVcc.

chanhvinh.com

5.9 Definition of Modulation Rate and Frequency in the SSCG Specification

The SSCG circuit can be used to decrease the peak value of electromagnetic interference noise by frequency modulation, i.e. by slightly modulating the output frequency. In this case, the rate of change in the frequency and the size of the change to the input clock frequency are defined as the modulation rate and modulation frequency, respectively. Figure 5.4 shows the modulation rate and modulation frequency.

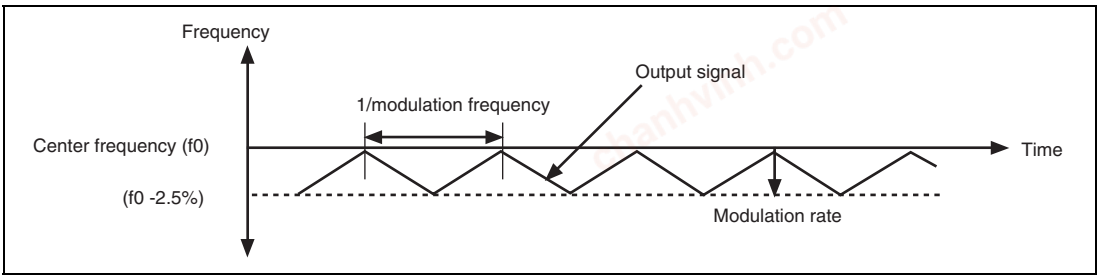

Figure 5.4 Definition of SSCG Modulation Rate and Frequency

chanhvinh.com

Section 6 Exception Handling

6.1 Overview

6.1.1 Types of Exception Handling and Priority

Exception handling is started by sources, such as resets, address errors, register bank errors, interrupts, and instructions. Table 6.1 shows their priorities. When several exception handling sources occur at once, they are processed according to the priority shown.

Table 6.1 Types of Exception Handling and Priority Order

Type	Exception Handling	Priority
Reset	Power-on reset	High
	Manual reset	
Address error	CPU address error	
	DMA address error	
Instruction	FPU exception	
	Integer division exception (division by zero)	
	Integer division exception (overflow)	
Register bank error	Bank underflow	
	Bank overflow	
Interrupt	NMI	
	User break	
	User debugging interface	
	IRQ	
	PINT	Low

chanhvinh.com

Type	Exception Handling	Priority
Instruction	Trap instruction (TRAPA instruction)	High
	General illegal instructions (undefined code)	
	Slot illegal instructions (undefined code placed directly after a delayed branch instruction*1 (including FPU instructions and FPU-related CPU instructions in FPU module standby state), instructions that rewrite the PC*2, 32-bit instructions*3, RESBANK instruction, DIVS instruction, and DIVU instruction)	Low

Notes: 1. Delayed branch instructions: JMP, JSR, BRA, BSR, RTS, RTE, BF/S, BT/S, BSRF, BRAF.
2. Instructions that rewrite the PC: JMP, JSR, BRA, BSR, RTS, RTE, BT, BF, TRAPA, BF/S, BT/S, BSRF, BRAF, JSR/N, RTV/N.
3. 32-bit instructions: BAND.B, BANDNOT.B, BCLR.B, BLD.B, BLDNOT.B, BOR.B, BORNOT.B, BSET.B, BST.B, BXOR.B, MOV.B@disp12, MOV.W@disp12, MOV.L@disp12, MOVI20, MOVI20S, MOVU.B, MOVU.W.

6.1.2 Exception Handling Operations

The exception handling sources are detected and start processing according to the timing shown in table 6.2.

Table 6.2 Timing of Exception Source Detection and Start of Exception Handling

Exception	Source	Timing of Source Detection and Start of Handling
Reset	Power-on reset	Starts when the $\overline{\text{RES}}$ pin changes from low to high, when the user debugging interface reset negate command is set after the user debugging interface reset assert command has been set, or when the watchdog timer overflows.
	Manual reset	Starts when the watchdog timer overflows.
Address error		Detected when instruction is decoded and starts when the previous executing instruction finishes executing.
Interrupts		
Register bank error	Bank underflow	Starts upon attempted execution of a RESBANK instruction when saving has not been performed to register banks.
	Bank overflow	In the state where saving has been performed to all register bank areas, starts when acceptance of register bank overflow exception has been set by the interrupt controller (the BOVE bit in IBNR of the interrupt controller is 1) and an interrupt that uses a register bank has occurred and been accepted by the CPU.

chanhvinh.com

Exception	Source	Timing of Source Detection and Start of Handling
Instructions	Trap instruction	Starts from the execution of a TRAPA instruction.
	General illegal instructions	Starts from the decoding of undefined code anytime except immediately after a delayed branch instruction (delay slot) (including FPU instructions and FPU-related CPU instructions in FPU module standby state).
	Slot illegal instructions	Starts from the decoding of undefined code placed directly after a delayed branch instruction (delay slot) (including FPU instructions and FPU-related CPU instructions in FPU module standby state), of instructions that rewrite the PC, of 32-bit instructions, of the RESBANK instruction, of the DIVS instruction, or of the DIVU instruction.
	Integer division exceptions	Starts when detecting division-by-zero exception or overflow exception caused by division of the negative maximum value (H'80000000) by −1.
Instructions	FPU exceptions	Starts when detecting invalid floating point operation exception defined by IEEE standard 754, division-by-zero exception, overflow, underflow, or inexact exception. Also starts when qNaN or ±∞ is input to the source for a floating point operation instruction when the QIS bit in FPSCR is set.

When exception handling starts, the CPU operates as follows:

(1) Exception Handling Triggered by Reset

The initial values of the program counter (PC) and stack pointer (SP) are fetched from the exception handling vector table (PC and SP are respectively the H'00000000 and H'00000004 addresses for power-on resets and the H'00000008 and H'0000000C addresses for manual resets). See section 6.1.3, Exception Handling Vector Table, for more information. The vector base register (VBR) is then initialized to H'00000000, the interrupt mask level bits (I3 to I0) of the status register (SR) are initialized to H'F (B'1111), and the BO and CS bits are initialized to 0. The BN bit in IBNR of the interrupt controller is also initialized to 0. The floating point status/control register (FPSCR) is initialized to H'00040001 by a power-on reset. The program begins running from the PC address fetched from the exception handling vector table.

chanhvinh.com

(2) Exception Handling Triggered by Address Errors, Register Bank Errors, Interrupts, and Instructions

SR and PC are saved to the stack indicated by R15. In the case of interrupt exception handling other than NMI and user break with usage of the register banks enabled, general registers R0 to R14, control register GBR, system registers MACH, MACL, and PR, and the vector table address offset of the interrupt exception handling to be executed are saved to the register banks. In the case of exception handling due to address errors, register bank errors, NMI interrupts, user break interrupts, or instructions, saving to a register bank is not performed. When saving is performed to all register banks, automatic saving to the stack is performed instead of register bank saving. In this case, an interrupt controller setting must have been made so that register bank overflow exceptions are not accepted (the BOVE bit in IBNR of the interrupt controller is 0). If a setting to accept register bank overflow exceptions has been made (the BOVE bit in IBNR of the interrupt controller is 1), register bank overflow exception will be generated. In the case of interrupt exception handling, the interrupt priority level is written to the I3 to I0 bits in SR. In the case of exception handling due to an address error or instruction, the I3 to I0 bits are not affected. The exception service routine start address is then fetched from the exception handling vector table and the program begins running from that address.

6.1.3 Exception Handling Vector Table

Before exception handling begins running, the exception handling vector table must be set in memory. The exception handling vector table stores the start addresses of exception service routines. (The reset exception handling table holds the initial values of PC and SP.)

All exception sources are given different vector numbers and vector table address offsets, from which the vector table addresses are calculated. During exception handling, the start addresses of the exception service routines are fetched from the exception handling vector table, which is indicated by this vector table address.

chanhvinh.com

Table 6.3 shows the vector numbers and vector table address offsets. Table 6.4 shows how vector table addresses are calculated.

Table 6.3 Exception Handling Vector Table

Exception Sources		Vector Numbers	Vector Table Address Offset
Power-on reset	PC	0	H'00000000 to H'00000003
	SP	1	H'00000004 to H'00000007
Manual reset	PC	2	H'00000008 to H'0000000B
	SP	3	H'0000000C to H'0000000F
General illegal instruction		4	H'00000010 to H'00000013
(Reserved by system)		5	H'00000014 to H'00000017
Slot illegal instruction		6	H'00000018 to H'0000001B
(Reserved by system)		7	H'0000001C to H'0000001F
		8	H'00000020 to H'00000023
CPU address error		9	H'00000024 to H'00000027
DMA address error		10	H'00000028 to H'0000002B
Interrupts	NMI	11	H'0000002C to H'0000002F
	User break	12	H'00000030 to H'00000033
FPU exception		13	H'00000034 to H'00000037
User debugging interface		14	H'00000038 to H'0000003B
Bank overflow		15	H'0000003C to H'0000003F
Bank underflow		16	H'00000040 to H'00000043
Integer division exception (division by zero)		17	H'00000044 to H'00000047
Integer division exception (overflow)		18	H'00000048 to H'0000004B
(Reserved by system)		19	H'0000004C to H'0000004F
		:	:
		31	H'0000007C to H'0000007F
Trap instruction (user vector)		32	H'00000080 to H'00000083
		:	:
		63	H'000000FC to H'000000FF

chanhvinh.com

Exception Sources	Vector Numbers	Vector Table Address Offset
External interrupts (IRQ, PINT), on-chip peripheral module interrupts*	64	H'00000100 to H'00000103
	:	:
	511	H'000007FC to H'000007FF

Note: * The vector numbers and vector table address offsets for each external interrupt and on-chip peripheral module interrupt are given in table 7.4 in section 7, Interrupt Controller.

Table 6.4 Calculating Exception Handling Vector Table Addresses

Exception Source	Vector Table Address Calculation
Resets	Vector table address = (vector table address offset) = (vector number) × 4
Address errors, register bank errors, interrupts, instructions	Vector table address = VBR + (vector table address offset) = VBR + (vector number) × 4

Notes: 1. Vector table address offset: See table 6.3.
2. Vector number: See table 6.3.

chanhvinh.com

6.2 Resets

6.2.1 Input/Output Pins

Table 6.5 shows the pin configuration.

Table 6.5 Pin Configuration

Pin Name	Symbol	I/O	Function
Power-on reset	$\overline{\text{RES}}$	Input	When this pin is driven low, this LSI shifts to the power-on reset processing

6.2.2 Types of Reset

A reset is the highest-priority exception handling source. There are two kinds of reset, power-on and manual. As shown in table 6.6, the CPU state is initialized in both a power-on reset and a manual reset. The FPU state is initialized by a power-on reset, but not by a manual reset. On-chip peripheral module registers except a few registers are also initialized by a power-on reset, but not by a manual reset.

Table 6.6 Reset States

	Conditions for Transition to Reset State			Internal States				
Type	$\overline{\text{RES}}$	User Debugging Interface Command	Watchdog Timer Overflow	CPU	Other Modules	On-Chip High-Speed RAM	On-Chip Large-Capacity RAM (Excluding On-Chip Data Retention RAM)	On-Chip Data Retention RAM
Power-on reset	Low	—	—	Initialized	Initialized	Initialized or Retained contents*2	Initialized or Retained contents*3	Initialized or Retained contents*4, *5
	High	User debugging interface reset assert command is set	—	Initialized	Initialized	Initialized or Retained contents*2	Initialized or Retained contents*3	Initialized or Retained contents*4
	High	Command other than user debugging interface reset assert is set	Power-on reset	Initialized	*1	Initialized or Retained contents*2	Initialized or Retained contents*3	Initialized or Retained contents*4
Manual reset	High	Command other than user debugging interface reset assert is set	Manual reset	Initialized	*1	Retained contents	Retained contents	Retained contents

chanhvinh.com

Notes: 1. See section 51.3, Register States in Each Operating Mode.
2. Data are retained when the setting of either the RAME or RAMWE bit is disabled.
3. Data are retained when the setting of either the VRAME or VRAMWE bit is disabled.
4. Data are retained when the setting of any of the VRAME, VRAMWE, or RRAMWE bits is disabled.
5. When the deep standby mode is canceled by a power-on reset, the data cannot be retained.

chanhvinh.com

6.2.3 Power-On Reset

(1) Power-On Reset by Means of $\overline{\text{RES}}$ Pin

When the $\overline{\text{RES}}$ pin is driven low, this LSI enters the power-on reset state. To reliably reset this LSI, the $\overline{\text{RES}}$ pin should be kept at the low level for the duration of the oscillation settling time at power-on or when in software standby mode (when the clock is halted), or at least 20-tcyc when the clock is running. In the power-on reset state, the internal state of the CPU and all the on-chip peripheral module registers are initialized. See section 53.1, Pin States, for the status of individual pins during the power-on reset state.

In the power-on reset state, power-on reset exception handling starts when the $\overline{\text{RES}}$ pin is first driven low for a fixed period and then returned to high. The CPU operates as follows:

1. The initial value (execution start address) of the program counter (PC) is fetched from the exception handling vector table.
2. The initial value of the stack pointer (SP) is fetched from the exception handling vector table.
3. The vector base register (VBR) is cleared to H'00000000, the interrupt mask level bits (I3 to I0) of the status register (SR) are initialized to H'F (B'1111), and the BO and CS bits are initialized to 0. The BN bit in IBNR of the interrupt controller is also initialized to 0. FPSCR is initialized to H'00040001
4. The values fetched from the exception handling vector table are set in the PC and SP, and the program begins executing.

Be certain to always perform power-on reset processing when turning the system power on.

(2) Power-On Reset by Means of User Debugging Interface Reset Assert Command

When the user debugging interface reset assert command is set, this LSI enters the power-on reset state. Power-on reset by means of the user debugging interface reset assert command is equivalent to power-on reset by means of the $\overline{\text{RES}}$ pin. Setting the user debugging interface reset negate command cancels the power-on reset state. The time required between the user debugging interface reset assert command and the user debugging interface reset negate command is the same as the time to keep the $\overline{\text{RES}}$ pin low to initiate a power-on reset. In the power-on reset state generated by the user debugging interface reset assert command, setting the user debugging interface reset negate command starts power-on reset exception handling. The CPU operates in the same way as when a power-on reset was caused by the $\overline{\text{RES}}$ pin.

chanhvinh.com

(3) Power-On Reset Initiated by Watchdog Timer

When a setting is made for a power-on reset to be generated in watchdog timer mode of the watchdog timer, and WTCNT of the watchdog timer overflows, this LSI enters the power-on reset state.

In this case, WRCSR of the watchdog timer and FRQCR of the clock pulse generator are not initialized by the reset signal generated by the watchdog timer.

If a reset caused by the $\overline{\text{RES}}$ pin or the user debugging interface reset assert command occurs simultaneously with a reset caused by watchdog timer overflow, the reset caused by the $\overline{\text{RES}}$ pin or the user debugging interface reset assert command has priority, and the WOVF bit in WRCSR is cleared to 0. When power-on reset exception processing is started by the watchdog timer, the CPU operates in the same way as when a power-on reset was caused by the $\overline{\text{RES}}$ pin.

6.2.4 Manual Reset

(1) Manual Reset Initiated by Watchdog Timer

When a setting is made for a manual reset to be generated in watchdog timer mode of the watchdog timer, and WTCNT of the watchdog timer overflows, this LSI enters the manual reset state.

When manual reset exception processing is started by the watchdog timer, the CPU operates as follows:

1. The initial value (execution start address) of the program counter (PC) is fetched from the exception handling vector table.
2. The initial value of the stack pointer (SP) is fetched from the exception handling vector table.
3. The vector base register (VBR) is cleared to H'00000000, the interrupt mask level bits (I3 to I0) of the status register (SR) are initialized to H'F (B'1111), and the BO and CS bits are initialized to 0. The BN bit in IBNR of interrupt controller is also initialized to 0.
4. The values fetched from the exception handling vector table are set in the PC and SP, and the program begins executing.

chanhvinh.com

(2) Note in Manual Reset

When a manual reset is generated, the bus cycle is retained, but if a manual reset occurs while the bus is released or during burst transfer by the direct memory access controller, manual reset exception handling will be deferred until the CPU acquires the bus. The CPU and the BN bit in IBNR of the interrupt controller are initialized by a manual reset. The FPU and other modules are not initialized.

chanhvinh.com

6.3 Address Errors

6.3.1 Address Error Sources

Address errors occur when instructions are fetched or data read or written, as shown in table 6.7.

Table 6.7 Bus Cycles and Address Errors

Bus Cycle			
Type	**Bus Master**	**Bus Cycle Description**	**Address Errors**
Instruction fetch	CPU	Instruction fetched from even address	None (normal)
		Instruction fetched from odd address	Address error occurs
		Instruction fetched from other than on-chip peripheral module space* or H'F0000000 to H'F5FFFFFF in on-chip RAM space*	None (normal)
		Instruction fetched from on-chip peripheral module space* or H'F0000000 to H'F5FFFFFF in on-chip RAM space*	Address error occurs
Data read/write	CPU or direct memory access controller	Word data accessed from even address	None (normal)
		Word data accessed from odd address	Address error occurs
		Longword data accessed from a longword boundary	None (normal)
		Longword data accessed from other than a long-word boundary	Address error occurs
		Double longword data accessed from double longword boundary	None (normal)
		Double longword data accessed from other than double longword boundary	Address error occurs
		Byte or word data accessed in on-chip peripheral module space*	None (normal)
		Longword data accessed in 16-bit on-chip peripheral module space*	None (normal)
		Longword data accessed in 8-bit on-chip peripheral module space*	None (normal)

Note: * See section 10, Bus State Controller, for details of the on-chip peripheral module space and on-chip RAM space.

chanhvinh.com

6.3.2 Address Error Exception Handling

When an address error occurs, the bus cycle in which the address error occurred ends. When the executing instruction then finishes, address error exception handling starts. The CPU operates as follows:

1. The exception service routine start address which corresponds to the address error that occurred is fetched from the exception handling vector table.
2. The status register (SR) is saved to the stack.
3. The program counter (PC) is saved to the stack. The PC value saved is the start address of the instruction to be executed after the last executed instruction.
4. After jumping to the exception service routine start address fetched from the exception handling vector table, program execution starts. The jump that occurs is not a delayed branch.

6.4 Register Bank Errors

6.4.1 Register Bank Error Sources

(1) Bank Overflow

In the state where saving has already been performed to all register bank areas, bank overflow occurs when acceptance of register bank overflow exception has been set by the interrupt controller (the BOVE bit in IBNR of the interrupt controller is set to 1) and an interrupt that uses a register bank has occurred and been accepted by the CPU.

(2) Bank Underflow

Bank underflow occurs when an attempt is made to execute a RESBANK instruction while saving has not been performed to register banks.

6.4.2 Register Bank Error Exception Handling

When a register bank error occurs, register bank error exception handling starts. The CPU operates as follows:

1. The exception service routine start address which corresponds to the register bank error that occurred is fetched from the exception handling vector table.
2. The status register (SR) is saved to the stack.
3. The program counter (PC) is saved to the stack. The PC value saved is the start address of the instruction to be executed after the last executed instruction for a bank overflow, and the start address of the executed RESBANK instruction for a bank underflow.

chanhvinh.com

To prevent multiple interrupts from occurring at a bank overflow, the priority level of the interrupt that caused the bank overflow is written to the interrupt mask level bits (I3 to I0) of the status register (SR).

4. After jumping to the exception service routine start address fetched from the exception handling vector table, program execution starts. The jump that occurs is not a delayed branch.

6.5 Interrupts

6.5.1 Interrupt Sources

The sources that start interrupt exception handling are divided into NMI, user break, user debugging interface, IRQ, PINT, and on-chip peripheral modules.

Each interrupt source is allocated a different vector number and vector table offset. See table 7.4 in section 7, Interrupt Controller, for more information on vector numbers and vector table address offsets.

chanhvinh.com

6.5.2 Interrupt Priority Level

The interrupt priority order is predetermined. When multiple interrupts occur simultaneously (overlap), the interrupt controller determines their relative priorities and starts exception handling according to the results.

The priority order of interrupts is expressed as priority levels 0 to 16, with priority 0 the lowest and priority 16 the highest. The NMI interrupt has priority 16 and cannot be masked, so it is always accepted. The priority level of user break and user debugging interface interrupts is 15. Priority levels of IRQ interrupts, PINT interrupts, and on-chip peripheral module interrupts can be set freely using the interrupt priority registers 01, 02, and 05 to 26 (IPR01, IPR02, and IPR05 to IPR26) of the interrupt controller as shown in table 6.8. The priority levels that can be set are 0 to 15. Level 16 cannot be set. See section 7.3.1, Interrupt Priority Registers 01, 02, 05 to 26 (IPR01, IPR02, IPR05 to IPR26), for details of IPR01, IPR02, and IPR05 to IPR26.

Table 6.8 Interrupt Priority Order

Type	Priority Level	Comment
NMI	16	Fixed priority level. Cannot be masked.
User break	15	Fixed priority level.
User debugging interface	15	Fixed priority level.
IRQ	0 to 15	Set with interrupt priority registers 01, 02, and 05 to 26 (IPR01, IPR02, and IPR05 to IPR26).
PINT		
On-chip peripheral module		

chanhvinh.com

6.5.3 Interrupt Exception Handling

When an interrupt occurs, its priority level is ascertained by the interrupt controller. NMI is always accepted, but other interrupts are only accepted if they have a priority level higher than the priority level set in the interrupt mask level bits (I3 to I0) of the status register (SR).

When an interrupt is accepted, interrupt exception handling begins. In interrupt exception handling, the CPU fetches the exception service routine start address which corresponds to the accepted interrupt from the exception handling vector table, and saves SR and the program counter (PC) to the stack. In the case of interrupt exception handling other than NMI and user break with usage of the register banks enabled, general registers R0 to R14, control register GBR, system registers MACH, MACL, and PR, and the vector table address offset of the interrupt exception handling to be executed are saved in the register banks. In the case of exception handling due to address errors, NMI interrupts, user break interrupts, or instructions, saving is not performed to the register banks. If saving has been performed to all register banks (0 to 14), automatic saving to the stack is performed instead of register bank saving. In this case, an interrupt controller setting must have been made so that register bank overflow exceptions are not accepted (the BOVE bit in IBNR of the interrupt controller is 0). If a setting to accept register bank overflow exceptions has been made (the BOVE bit in IBNR of the interrupt controller is 1), register bank overflow exception occurs. Next, the priority level value of the accepted interrupt is written to the I3 to I0 bits in SR. For NMI, however, the priority level is 16, but the value set in the I3 to I0 bits is H'F (level 15). Then, after jumping to the start address fetched from the exception handling vector table, program execution starts. The jump that occurs is not a delayed branch. See section 7.6, Operation, for further details of interrupt exception handling.

chanhvinh.com

6.6 Exceptions Triggered by Instructions

6.6.1 Types of Exceptions Triggered by Instructions

Exception handling can be triggered by trap instructions, general illegal instructions, slot illegal instructions, integer division exceptions, and FPU exceptions, as shown in table 6.9.

Table 6.9 Types of Exceptions Triggered by Instructions

Type	Source Instruction	Comment
Trap instruction	TRAPA	
Slot illegal instructions	Undefined code placed immediately after a delayed branch instruction (delay slot) (including FPU instructions and FPU-related CPU instructions in FPU module standby state), instructions that rewrite the PC, 32-bit instructions, RESBANK instruction, DIVS instruction, and DIVU instruction	Delayed branch instructions: JMP, JSR, BRA, BSR, RTS, RTE, BF/S, BT/S, BSRF, BRAF Instructions that rewrite the PC: JMP, JSR, BRA, BSR, RTS, RTE, BT, BF, TRAPA, BF/S, BT/S, BSRF, BRAF, JSR/N, RTV/N 32-bit instructions: BAND.B, BANDNOT.B, BCLR.B, BLD.B, BLDNOT.B, BOR.B, BORNOT.B, BSET.B, BST.B, BXOR.B, MOV.B@disp12, MOV.W@disp12, MOV.L@disp12, MOVI20, MOVI20S, MOVU.B, MOVU.W.
General illegal instructions	Undefined code anywhere besides in a delay slot (including FPU instructions and FPU-related CPU instructions in FPU module standby state)	
Integer division exceptions	Division by zero	DIVU, DIVS
	Negative maximum value ÷ (–1)	DIVS
FPU exceptions	Starts when detecting invalid operation exception defined by IEEE754, division-by-zero exception, overflow, underflow, or inexact exception.	FADD, FSUB, FMUL, FDIV, FMAC, FCMP/EQ, FCMP/GT, FLOAT, FTRC, FCNVDS, FCNVSD, FSQRT

chanhvinh.com

6.6.2 Trap Instructions

When a TRAPA instruction is executed, trap instruction exception handling starts. The CPU operates as follows:

1. The exception service routine start address which corresponds to the vector number specified in the TRAPA instruction is fetched from the exception handling vector table.
2. The status register (SR) is saved to the stack.
3. The program counter (PC) is saved to the stack. The PC value saved is the start address of the instruction to be executed after the TRAPA instruction.
4. After jumping to the exception service routine start address fetched from the exception handling vector table, program execution starts. The jump that occurs is not a delayed branch.

6.6.3 Slot Illegal Instructions

An instruction placed immediately after a delayed branch instruction is called the “instruction placed in a delay slot”. When the instruction placed in the delay slot is undefined code (including FPU instructions and FPU-related CPU instructions in FPU module standby state), an instruction that rewrites the PC, a 32-bit instruction, an RESBANK instruction, a DIVS instruction, or a DIVU instruction, slot illegal exception handling starts when such kind of instruction is decoded. When the FPU has entered a module standby state, the floating point operation instruction and FPU-related CPU instructions are handled as undefined codes. If these instructions are placed in a delay slot and then decoded, a slot illegal instruction exception handling starts.

The CPU operates as follows:

1. The exception service routine start address is fetched from the exception handling vector table.
2. The status register (SR) is saved to the stack.
3. The program counter (PC) is saved to the stack. The PC value saved is the jump address of the delayed branch instruction immediately before the undefined code, the instruction that rewrites the PC, the 32-bit instruction, the RESBANK instruction, the DIVS instruction, or the DIVU instruction.
4. After jumping to the exception service routine start address fetched from the exception handling vector table, program execution starts. The jump that occurs is not a delayed branch.

chanhvinh.com

6.6.4 General Illegal Instructions

When an undefined code, including FPU instructions and FPU-related CPU instructions in FPU module standby state, placed anywhere other than immediately after a delayed branch instruction, i.e., in a delay slot, is decoded, general illegal instruction exception handling starts. When the FPU has entered a module standby state, the floating point instruction and FPU-related CPU instructions are handled as undefined codes. If these instructions are placed anywhere other than immediately after a delayed branch instruction (i.e., in a delay slot) and then decoded, general illegal instruction exception handling starts.

In general illegal instruction exception handling, the CPU handles general illegal instructions in the same way as slot illegal instructions. Unlike processing of slot illegal instructions, however, the program counter value stored is the start address of the undefined code.

6.6.5 Integer Division Exceptions

When an integer division instruction performs division by zero or the result of integer division overflows, integer division instruction exception handling starts. The instructions that may become the source of division-by-zero exception are DIVU and DIVS. The only source instruction of overflow exception is DIVS, and overflow exception occurs only when the negative maximum value is divided by −1. The CPU operates as follows:

1. The exception service routine start address which corresponds to the integer division exception that occurred is fetched from the exception handling vector table.
2. The status register (SR) is saved to the stack.
3. The program counter (PC) is saved to the stack. The PC value saved is the start address of the integer division instruction at which the exception occurred.
4. After jumping to the exception service routine start address fetched from the exception handling vector table, program execution starts. The jump that occurs is not a delayed branch.

chanhvinh.com

6.6.6 FPU Exceptions

An FPU exception handling is generated when the V, Z, O, U or I bit in the FPU exception enable field (Enable) of the floating point status/control register (FPSCR) is set. This indicates the occurrence of an invalid operation exception defined by the IEEE standard 754, a division-by-zero exception, overflow (in the case of an instruction for which this is possible), underflow (in the case of an instruction for which this is possible), or inexact exception (in the case of an instruction for which this is possible).

The floating point operation instructions that may cause an FPU exception handling are FADD, FSUB, FMUL, FDIV, FMAC, FCMP/EQ, FCMP/GT, FLOAT, FTRC, FCNVDS, FCNVSD, and FSQRT.

An FPU exception handling is generated only when the corresponding FPU exception enable bit (Enable) is set. When the FPU detects an exception source in floating point operation, FPU operation is halted and generation of an FPU exception handling is reported to the CPU. When exception handling is started, the CPU operations are as follows.

1. The start address of the exception service routine which corresponds to the FPU exception handling that occurred is fetched from the exception handling vector table.
2. The status register (SR) is saved to the stack.
3. The program counter (PC) is saved to the stack. The PC value saved is the start address of the instruction to be executed after the last executed instruction.
4. After jumping to the exception service routine start address fetched from the exception handling vector table, program execution starts. This jump is not a delayed branch.

The FPU exception flag field (Flag) of FPSCR is always updated regardless of whether or not an FPU exception handling has been accepted, and remains set until explicitly cleared by the user through an instruction. The FPU exception source field (Cause) of FPSCR changes each time a floating point operation instruction is executed.

When the V bit in the FPU exception enable field (Enable) of FPSCR is set and the QIS bit in FPSCR is also set, FPU exception handling is generated when qNAN or ±∞ is input to a floating point operation instruction source.

chanhvinh.com

6.7 When Exception Sources Are Not Accepted

When an address error, FPU exception, register bank error (overflow), or interrupt is generated immediately after a delayed branch instruction, it is sometimes not accepted immediately but stored instead, as shown in table 6.10. When this happens, it will be accepted when an instruction that can accept the exception is decoded.

Table 6.10 Exception Source Generation Immediately after Delayed Branch Instruction

	Exception Source			
Point of Occurrence	Address Error	Floating-Point Unit Exception	Register Bank Error (Overflow)	Interrupt
Immediately after a delayed branch instruction*	Not accepted	Not accepted	Not accepted	Not accepted

Note: * Delayed branch instructions: JMP, JSR, BRA, BSR, RTS, RTE, BF/S, BT/S, BSRF, BRAF

6.8 Stack Status after Exception Handling Ends

The status of the stack after exception handling ends is as shown in table 6.11.

Table 6.11 Stack Status after Exception Handling Ends

Exception Type	Stack Status
Address error	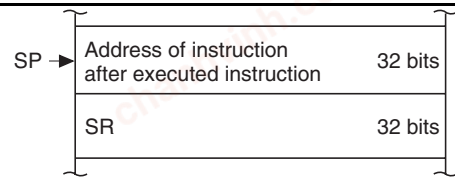
Interrupt	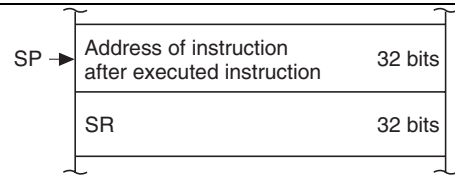

chanhvinh.com

Exception Type	Stack Status
Register bank error (overflow)	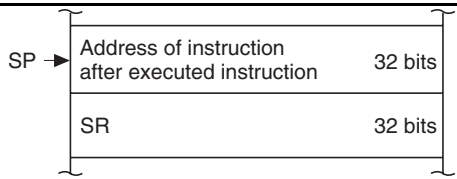
Register bank error (underflow)	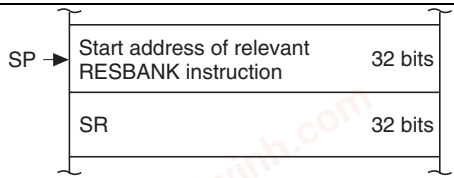
Trap instruction	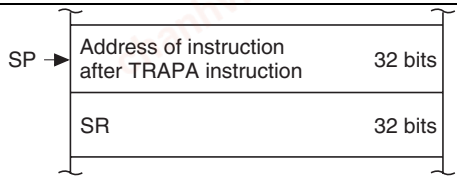
Slot illegal instruction	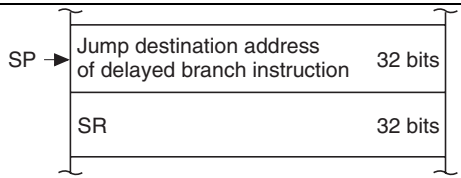
General illegal instruction	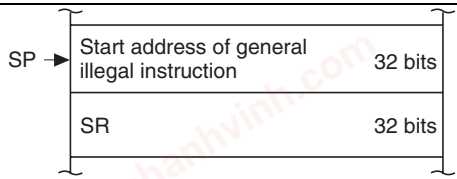
Integer division exception	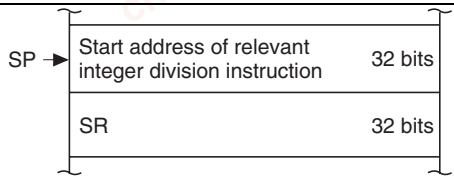
FPU exception	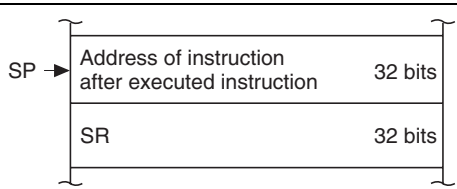

chanhvinh.com

6.9 Usage Notes

6.9.1 Value of Stack Pointer (SP)

The value of the stack pointer must always be a multiple of four. If it is not, an address error will occur when the stack is accessed during exception handling.

6.9.2 Value of Vector Base Register (VBR)

The value of the vector base register must always be a multiple of four. If it is not, an address error will occur when the stack is accessed during exception handling.

6.9.3 Address Errors Caused by Stacking of Address Error Exception Handling

When the stack pointer is not a multiple of four, an address error will occur during stacking of the exception handling (interrupts, etc.) and address error exception handling will start up as soon as the first exception handling is ended. Address errors will then also occur in the stacking for this address error exception handling. To ensure that address error exception handling does not go into an endless loop, no address errors are accepted at that point. This allows program control to be shifted to the address error exception service routine and enables error processing.

When an address error occurs during exception handling stacking, the stacking bus cycle (write) is executed. During stacking of the status register (SR) and program counter (PC), the SP is decremented by 4 for both, so the value of SP will not be a multiple of four after the stacking either. The address value output during stacking is the SP value, so the address where the error occurred is itself output. This means the write data stacked will be undefined.

6.9.4 Interrupt Control via Modification of Interrupt Mask Bits

When enabling interrupts by changing the interrupt mask bits (I3 to I0) of the status register (SR) using the LDC or LDC.L instructions, interrupts might not be accepted during the execution of the 5 instructions immediately after the LDC/LDC.L instruction.

Therefore, when enabling/disabling interrupts by changing the interrupt mask bits (I3 to I0) of the status register (SR) using LDC/LDC.L instructions, please place at least 5 instructions between the interrupt-enable instruction and the interrupt-disable instruction.

chanhvinh.com

6.9.5 Note before Exception Handling Begins Running

Before exception handling begins running, the exception handling vector table must be stored in a memory, and the CPU must be able to access the memory. So, if the exception handling is generated

- Ex. 1: when the exception handling vector table is stored in an external address space, but the settings of bus state controller and general I/O ports to access the external address space have been not completed yet, or
- Ex. 2: when the exception handling vector table is stored in the on-chip RAM, but the vector base register (VBR) has been not changed to the on-chip RAM address yet,

the CPU fetches an unintended value as the execution start address, and starts executing programs from unintended address.

(1) Manual Reset

Before the settings necessary to access the external CS0 space are completed, the manual reset should not be generated. When a manual reset is generated, the CPU fetches the execution start address from the location at the offset for the manual reset (H'00000008) in the vector table, that is, always from the external CS0 space. Additionally, in the case that no memory is connected to the external CS0 space in boot modes 2 to 5, the manual reset should not be generated.

(2) NMI Interrupt

Before the exception handling vector table is stored in a memory and the settings necessary to access the memory are completed, the settings to permit the interrupts should not be done.

Specially in boot modes 2 to 5, the VBR is kept as the initial value H'00000000 in the period of the boot operation (before the transfer of the loader program is completed and the CPU jumps to the on-chip high-speed RAM). Before the VBR is changed or the settings necessary to access the external address space are completed in the loader program, the settings to permit the interrupts should not be done.

(3) Interrupts Other Than NMI

Before the exception handling vector table is stored in a memory and the settings necessary to access the memory are completed, the settings to permit the interrupts should not be done.

chanhvinh.com

(4) The Other Exceptions

Before the exception handling vector table is stored in a memory and the settings necessary to access the memory are completed, the exception handling should not be generated.

chanhvinh.com

chanhvinh.com
chanhvinh.com
chanhvinh.com

chanhvinh.com

Section 7 Interrupt Controller

The interrupt controller ascertains the priority of interrupt sources and controls interrupt requests to the CPU. The interrupt controller registers set the order of priority of each interrupt, allowing the user to process interrupt requests according to the user-set priority.

7.1 Features

- 16 levels of interrupt priority can be set.

  By setting the 24 interrupt priority registers, the priorities of IRQ interrupts, PINT interrupts, and on-chip peripheral module interrupts can be selected from 16 levels for request sources.
- NMI noise canceler function

  An NMI input-level bit indicates the NMI pin state. By reading this bit in the interrupt exception service routine, the pin state can be checked, enabling it to be used as the noise canceler function.
- Register banks

  This LSI has register banks that enable register saving and restoration required in the interrupt processing to be performed at high speed.

chanhvinh.com

Figure 7.1 shows a block diagram.

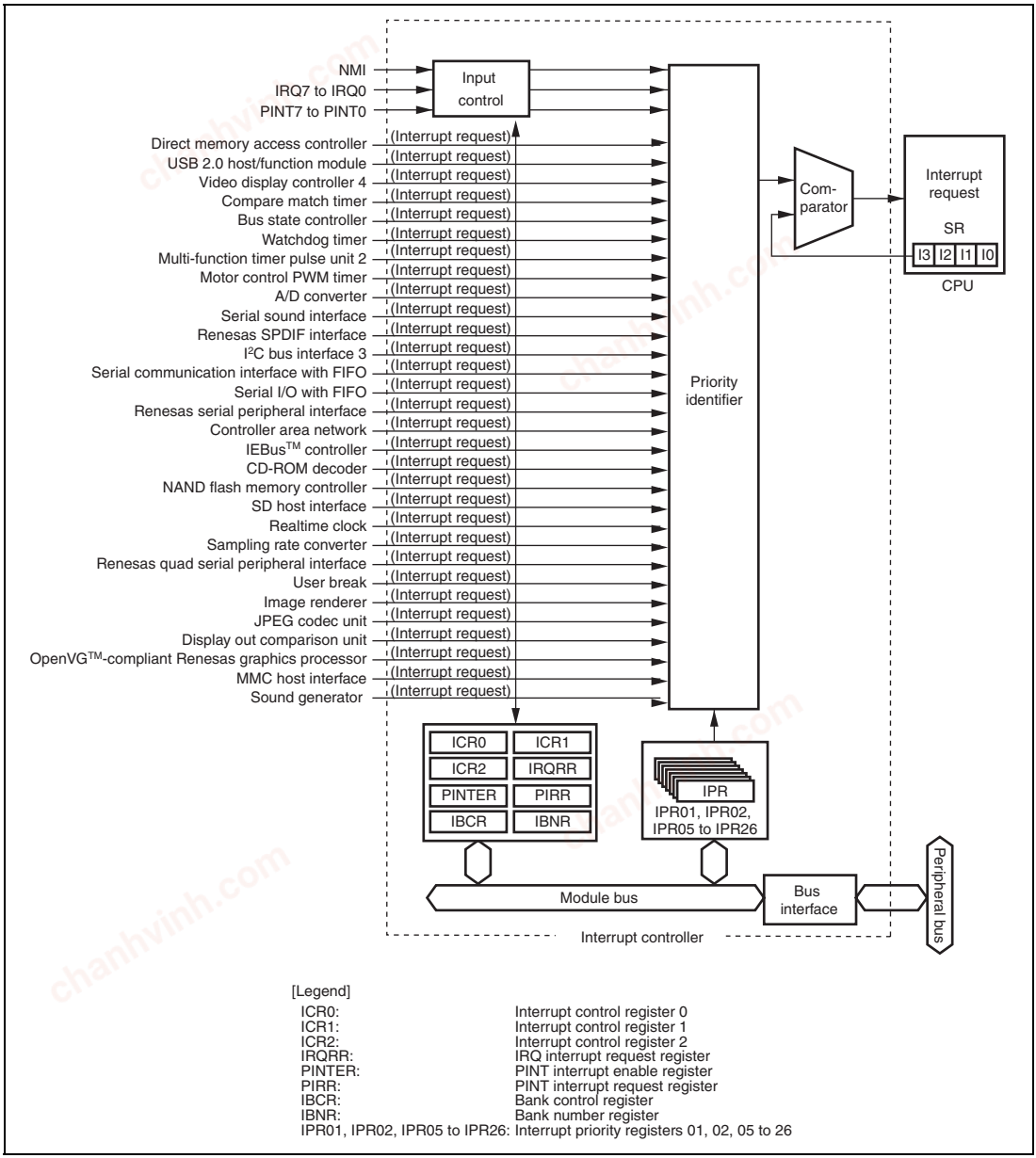

[Legend]

ICR0:	Interrupt control register 0
ICR1:	Interrupt control register 1
ICR2:	Interrupt control register 2
IRQRR:	IRQ interrupt request register
PINTER:	PINT interrupt enable register
PIRR:	PINT interrupt request register
IBCR:	Bank control register
IBNR:	Bank number register
IPR01, IPR02, IPR05 to IPR26:	Interrupt priority registers 01, 02, 05 to 26

Figure 7.1 Block Diagram

chanhvinh.com

7.2 Input/Output Pins

Table 7.1 shows the pin configuration.

Table 7.1 Pin Configuration

Pin Name	Symbol	I/O	Function
Nonmaskable interrupt input pin	NMI	Input	Input of nonmaskable interrupt request signal
Interrupt request input pins	IRQ7 to IRQ0	Input	Input of maskable interrupt request signals
	PINT7 to PINT0	Input	

chanhvinh.com

7.3 Register Descriptions

Table 7.2 shows the register configuration. These registers are used to set the interrupt priorities and control detection of the external interrupt input signal.

Table 7.2 Register Configuration

Register Name	Abbreviation	R/W	Initial Value	Address	Access Size
Interrupt control register 0	ICR0	R/W	*1	H'FFFE0800	16, 32
Interrupt control register 1	ICR1	R/W	H'0000	H'FFFE0802	16, 32
Interrupt control register 2	ICR2	R/W	H'0000	H'FFFE0804	16, 32
IRQ interrupt request register	IRQRR	R/(W)*2	H'0000	H'FFFE0806	16, 32
PINT interrupt enable register	PINTER	R/W	H'0000	H'FFFE0808	16, 32
PINT interrupt request register	PIRR	R	H'0000	H'FFFE080A	16, 32
Bank control register	IBCR	R/W	H'0000	H'FFFE080C	16, 32
Bank number register	IBNR	R/W	H'0000	H'FFFE080E	16, 32
Interrupt priority register 01	IPR01	R/W	H'0000	H'FFFE0818	16, 32
Interrupt priority register 02	IPR02	R/W	H'0000	H'FFFE081A	16, 32
Interrupt priority register 05	IPR05	R/W	H'0000	H'FFFE0820	16, 32
Interrupt priority register 06	IPR06	R/W	H'0000	H'FFFE0C00	16, 32
Interrupt priority register 07	IPR07	R/W	H'0000	H'FFFE0C02	16, 32
Interrupt priority register 08	IPR08	R/W	H'0000	H'FFFE0C04	16, 32
Interrupt priority register 09	IPR09	R/W	H'0000	H'FFFE0C06	16, 32
Interrupt priority register 10	IPR10	R/W	H'0000	H'FFFE0C08	16, 32
Interrupt priority register 11	IPR11	R/W	H'0000	H'FFFE0C0A	16, 32
Interrupt priority register 12	IPR12	R/W	H'0000	H'FFFE0C0C	16, 32
Interrupt priority register 13	IPR13	R/W	H'0000	H'FFFE0C0E	16, 32
Interrupt priority register 14	IPR14	R/W	H'0000	H'FFFE0C10	16, 32
Interrupt priority register 15	IPR15	R/W	H'0000	H'FFFE0C12	16, 32
Interrupt priority register 16	IPR16	R/W	H'0000	H'FFFE0C14	16, 32
Interrupt priority register 17	IPR17	R/W	H'0000	H'FFFE0C16	16, 32
Interrupt priority register 18	IPR18	R/W	H'0000	H'FFFE0C18	16, 32
Interrupt priority register 19	IPR19	R/W	H'0000	H'FFFE0C1A	16, 32
Interrupt priority register 20	IPR20	R/W	H'0000	H'FFFE0C1C	16, 32

chanhvinh.com

Register Name	Abbreviation	R/W	Initial Value	Address	Access Size
Interrupt priority register 21	IPR21	R/W	H'0000	H'FFFE0C1E	16, 32
Interrupt priority register 22	IPR22	R/W	H'0000	H'FFFE0C20	16, 32
Interrupt priority register 23	IPR23	R/W	H'0000	H'FFFE0C22	16, 32
Interrupt priority register 24	IPR24	R/W	H'0000	H'FFFE0C24	16, 32
Interrupt priority register 25	IPR25	R/W	H'0000	H'FFFE0C26	16, 32
Interrupt priority register 26	IPR26	R/W	H'0000	H'FFFE0C28	16, 32

Notes: 1. When the NMI pin is high, becomes H'8001; when low, becomes H'0001.
2. Only 0 can be written after reading 1, to clear the flag.

chanhvinh.com

7.3.1 Interrupt Priority Registers 01, 02, 05 to 26 (IPR01, IPR02, IPR05 to IPR26)

IPR01, IPR02, and IPR05 to IPR26 are 16-bit readable/writable registers in which priority levels from 0 to 15 are set for IRQ interrupts, PINT interrupts, and on-chip peripheral module interrupts. Table 7.3 shows the correspondence between the interrupt request sources and the bits in IPR01, IPR02, and IPR05 to IPR26.

Bit:	15	14	13	12	11	10	9	8	7	6	5	4	3	2	1	0
Initial value:	0	0	0	0	0	0	0	0	0	0	0	0	0	0	0	0
R/W:	R/W	R/W	R/W	R/W	R/W	R/W	R/W	R/W	R/W	R/W	R/W	R/W	R/W	R/W	R/W	R/W

Table 7.3 Interrupt Request Sources and IPR01, IPR02, and IPR05 to IPR26

Register Name	Bits 15 to 12	Bits 11 to 8	Bits 7 to 4	Bits 3 to 0
IPR01	IRQ0	IRQ1	IRQ2	IRQ3
IPR02	IRQ4	IRQ5	IRQ6	IRQ7
IPR05	PINT7 to PINT0	Reserved	Reserved	Reserved
IPR06	Direct memory access controller channel 0	Direct memory access controller channel 1	Direct memory access controller channel 2	Direct memory access controller channel 3
IPR07	Direct memory access controller channel 4	Direct memory access controller channel 5	Direct memory access controller channel 6	Direct memory access controller channel 7
IPR08	Direct memory access controller channel 8	Direct memory access controller channel 9	Direct memory access controller channel 10	Direct memory access controller channel 11
IPR09	Direct memory access controller channel 12	Direct memory access controller channel 13	Direct memory access controller channel 14	Direct memory access controller channel 15
IPR10	USB 2.0 host/function module	Video display controller 4	Video display controller 4	Video display controller 4
IPR11	Image renderer	JPEG codec unit	Display out comparison unit	OpenVG™-compliant Renesas graphics processor

chanhvinh.com

Register Name	Bits 15 to 12	Bits 11 to 8	Bits 7 to 4	Bits 3 to 0
IPR12	Compare match timer channel 0	Compare match timer channel 1	Bus state controller	Watchdog timer
IPR13	Multi-function timer pulse unit 2 channel 0 (TGI0A to TGI0D)	Multi-function timer pulse unit 2 channel 0 (TCI0V, TGI0E, TGI0F)	Multi-function timer pulse unit 2 channel 1 (TGI1A, TGI1B)	Multi-function timer pulse unit 2 channel 1 (TGI1V, TGI1U)
IPR14	Multi-function timer pulse unit 2 channel 2 (TGI2A, TGI2B)	Multi-function timer pulse unit 2 channel 2 (TGI2V, TGI2U)	Multi-function timer pulse unit 2 channel 3 (TGI3A to TGI3D)	Multi-function timer pulse unit 2 channel 3 (TGI3V)
IPR15	Multi-function timer pulse unit 2 channel 4 (TGI4A to TGI4D)	Multi-function timer pulse unit 2 channel 4 (TGI4V)	Motor control PWM timer channel 1	Motor control PWM timer channel 2
IPR16	Sound generator channel 0	Sound generator channel 1	Sound generator channel 2	Sound generator channel 0
IPR17	A/D converter	Serial sound interface channel 0	Serial sound interface channel 1	Serial sound interface channel 2
IPR18	Serial sound interface channel 3	Serial sound interface channel 4	Serial sound interface channel 5	Renesas SPDIF interface
IPR19	I^2C bus interface 3 channel 0	I^2C bus interface 3 channel 1	I^2C bus interface 3 channel 2	I^2C bus interface 3 channel 3
IPR20	Channel 0 for serial communication interface with FIFO	Channel 1 for serial communication interface with FIFO	Channel 2 for serial communication interface with FIFO	Channel 3 for serial communication interface with FIFO
IPR21	Channel 4 for serial communication interface with FIFO	Channel 5 for serial communication interface with FIFO	Channel 6 for serial communication interface with FIFO	Channel 7 for serial communication interface with FIFO
IPR22	Clock-synchronized serial I/O module with FIFO	Controller area network channel 0	Controller area network channel 1	Controller area network channel 2

chanhvinh.com

Register Name	Bits 15 to 12	Bits 11 to 8	Bits 7 to 4	Bits 3 to 0
IPR23	Renesas serial peripheral interface channel 0	Renesas serial peripheral interface channel 1	Renesas quad serial peripheral interface channel 0	Renesas quad serial peripheral interface channel 1
IPR24	IEBus™ controller	CD-ROM decoder	NAND flash memory controller	MMC host interface
IPR25	SD host interface channel 0	SD host interface channel 1	Realtime clock	Reserved
IPR26	Sampling rate converter channel 0	Sampling rate converter channel 1	Sampling rate converter channel 2	Reserved

chanhvinh.com

As shown in table 7.3, by setting the 4-bit groups (bits 15 to 12, bits 11 to 8, bits 7 to 4, and bits 3 to 0) with values from H'0 (0000) to H'F (1111), the priority of each corresponding interrupt is set. Setting of H'0 means priority level 0 (the lowest level) and H'F means priority level 15 (the highest level).

7.3.2 Interrupt Control Register 0 (ICR0)

ICR0 is a 16-bit register that sets the input signal detection mode for the external interrupt input pin NMI, and indicates the input level at the NMI pin.

Bit:	15	14	13	12	11	10	9	8	7	6	5	4	3	2	1	0
	NMIL	-	-	-	-	-	-	NMIE	-	-	-	-	-	-	NMIF	NMIM
Initial value:	*1	0	0	0	0	0	0	0	0	0	0	0	0	0	0	1
R/W:	R	R	R	R	R	R	R	R/W	R	R	R	R	R	R	R	R/(W)*2

Notes: 1. 1 when the NMI pin is high, and 0 when the NMI pin is low.
2. Only 0 can be written to this bit.

Bit	Bit Name	Initial Value	R/W	Description
15	NMIL	*	R	NMI Input Level Sets the level of the signal input at the NMI pin. The NMI pin level can be obtained by reading this bit. This bit cannot be modified. 0: Low level is input to NMI pin 1: High level is input to NMI pin
14 to 9	—	All 0	R	Reserved These bits are always read as 0. The write value should always be 0.
8	NMIE	0	R/W	NMI Edge Select Selects whether the falling or rising edge of the interrupt request signal on the NMI pin is detected. 0: Interrupt request is detected on falling edge of NMI input 1: Interrupt request is detected on rising edge of NMI input
7 to 2	—	All 0	R	Reserved These bits are always read as 0. The write value should always be 0.

chanhvinh.com

Bit	Bit Name	Initial Value	R/W	Description
1	NMIF	0	R	NMI Interrupt Request This bit indicates the status of the NMI interrupt request. This bit cannot be modified. 0: NMI interrupt request has not occurred [Clearing conditions] • Cleared by changing NMIE of ICR0 • Cleared by executing NMI interrupt exception handling 1: NMI interrupt request is detected [Setting condition] • Edge corresponding to NMIE of ICR0 has occurred at NMI pin
0	NMIM	1	R/(W) *2	NMI Mask Selects whether to enable interrupt request input to external interrupt input pin NMI. 0: NMI input interrupt request is enabled 1: NMI input interrupt request is masked

chanhvinh.com

7.3.3 Interrupt Control Register 1 (ICR1)

ICR1 is a 16-bit register that specifies the detection mode for external interrupt input pins IRQ7 to IRQ0 individually: low level, falling edge, rising edge, or both edges.

Bit:	15	14	13	12	11	10	9	8	7	6	5	4	3	2	1	0
	IRQ71S	IRQ70S	IRQ61S	IRQ60S	IRQ51S	IRQ50S	IRQ41S	IRQ40S	IRQ31S	IRQ30S	IRQ21S	IRQ20S	IRQ11S	IRQ10S	IRQ01S	IRQ00S
Initial value:	0	0	0	0	0	0	0	0	0	0	0	0	0	0	0	0
R/W:	R/W	R/W	R/W	R/W	R/W	R/W	R/W	R/W	R/W	R/W	R/W	R/W	R/W	R/W	R/W	R/W

Bit	Bit Name	Initial Value	R/W	Description
15	IRQ71S	0	R/W	IRQ Sense Select These bits select whether interrupt signals corresponding to pins IRQ7 to IRQ0 are detected by a low level, falling edge, rising edge, or both edges. 00: Interrupt request is detected on low level of IRQn input 01: Interrupt request is detected on falling edge of IRQn input 10: Interrupt request is detected on rising edge of IRQn input 11: Interrupt request is detected on both edges of IRQn input
14	IRQ70S	0	R/W	
13	IRQ61S	0	R/W	
12	IRQ60S	0	R/W	
11	IRQ51S	0	R/W	
10	IRQ50S	0	R/W	
9	IRQ41S	0	R/W	
8	IRQ40S	0	R/W	
7	IRQ31S	0	R/W	
6	IRQ30S	0	R/W	
5	IRQ21S	0	R/W	
4	IRQ20S	0	R/W	
3	IRQ11S	0	R/W	
2	IRQ10S	0	R/W	
1	IRQ01S	0	R/W	
0	IRQ00S	0	R/W	

[Legend]
n = 7 to 0

chanhvinh.com

7.3.4 Interrupt Control Register 2 (ICR2)

ICR2 is a 16-bit register that specifies the detection mode for external interrupt input pins PINT7 to PINT0 individually: low level or high level.

Bit:	15	14	13	12	11	10	9	8	7	6	5	4	3	2	1	0
	-	-	-	-	-	-	-	-	PINT7S	PINT6S	PINT5S	PINT4S	PINT3S	PINT2S	PINT1S	PINT0S
Initial value:	0	0	0	0	0	0	0	0	0	0	0	0	0	0	0	0
R/W:	R	R	R	R	R	R	R	R	R/W	R/W	R/W	R/W	R/W	R/W	R/W	R/W

Bit	Bit Name	Initial Value	R/W	Description
15 to 8	—	All 0	R	Reserved These bits are always read as 0. The write value should always be 0.
7	PINT7S	0	R/W	PINT Sense Select These bits select whether interrupt signals corresponding to pins PINT7 to PINT0 are detected by a low level or high level. 0: Interrupt request is detected on low level of PINTn input 1: Interrupt request is detected on high level of PINTn input
6	PINT6S	0	R/W	
5	PINT5S	0	R/W	
4	PINT4S	0	R/W	
3	PINT3S	0	R/W	
2	PINT2S	0	R/W	
1	PINT1S	0	R/W	
0	PINT0S	0	R/W	

[Legend]

n = 7 to 0

chanhvinh.com

7.3.5 IRQ Interrupt Request Register (IRQRR)

IRQRR is a 16-bit register that indicates interrupt requests from external input pins IRQ7 to IRQ0. If edge detection is set for the IRQ7 to IRQ0 interrupts, writing 0 to the IRQ7F to IRQ0F bits after reading IRQ7F to IRQ0F = 1 cancels the retained interrupts.

Bit:	15	14	13	12	11	10	9	8	7	6	5	4	3	2	1	0
	-	-	-	-	-	-	-	-	IRQ7F	IRQ6F	IRQ5F	IRQ4F	IRQ3F	IRQ2F	IRQ1F	IRQ0F
Initial value:	0	0	0	0	0	0	0	0	0	0	0	0	0	0	0	0
R/W:	R	R	R	R	R	R	R	R	R/(W)*	R/(W)*	R/(W)*	R/(W)*	R/(W)*	R/(W)*	R/(W)*	R/(W)*

Note: * Only 0 can be written to clear the flag after 1 is read.

Bit	Bit Name	Initial Value	R/W	Description
15 to 8	—	All 0	R	Reserved These bits are always read as 0. The write value should always be 0.
7	IRQ7F	0	R/(W)*	IRQ Interrupt Request These bits indicate the status of the IRQ7 to IRQ0 interrupt requests. Level detection: 0: IRQn interrupt request has not occurred [Clearing condition] • IRQn input is high 1: IRQn interrupt has occurred [Setting condition] • IRQn input is low Edge detection: 0: IRQn interrupt request is not detected [Clearing conditions] • Cleared by reading IRQnF while IRQnF = 1, then writing 0 to IRQnF • Cleared by executing IRQn interrupt exception handling 1: IRQn interrupt request is detected [Setting condition] • Edge corresponding to IRQn1S or IRQn0S of ICR1 has occurred at IRQn pin
6	IRQ6F	0	R/(W)*	
5	IRQ5F	0	R/(W)*	
4	IRQ4F	0	R/(W)*	
3	IRQ3F	0	R/(W)*	
2	IRQ2F	0	R/(W)*	
1	IRQ1F	0	R/(W)*	
0	IRQ0F	0	R/(W)*	

[Legend]
n = 7 to 0

chanhvinh.com

7.3.6 PINT Interrupt Enable Register (PINTER)

PINTER is a 16-bit register that enables interrupt request inputs to external interrupt input pins PINT7 to PINT0.

Bit:	15	14	13	12	11	10	9	8	7	6	5	4	3	2	1	0
	-	-	-	-	-	-	-	-	PINT7E	PINT6E	PINT5E	PINT4E	PINT3E	PINT2E	PINT1E	PINT0E
Initial value:	0	0	0	0	0	0	0	0	0	0	0	0	0	0	0	0
R/W:	R	R	R	R	R	R	R	R	R/W	R/W	R/W	R/W	R/W	R/W	R/W	R/W

Bit	Bit Name	Initial Value	R/W	Description
15 to 8	—	All 0	R	Reserved These bits are always read as 0. The write value should always be 0.
7	PINT7E	0	R/W	PINT Enable These bits select whether to enable interrupt request inputs to external interrupt input pins PINT7 to PINT0. 0: PINTn input interrupt request is disabled 1: PINTn input interrupt request is enabled
6	PINT6E	0	R/W	
5	PINT5E	0	R/W	
4	PINT4E	0	R/W	
3	PINT3E	0	R/W	
2	PINT2E	0	R/W	
1	PINT1E	0	R/W	
0	PINT0E	0	R/W	

[Legend]
n = 7 to 0

chanhvinh.com

7.3.7 PINT Interrupt Request Register (PIRR)

PIRR is a 16-bit register that indicates interrupt requests from external input pins PINT7 to PINT0.

Bit:	15	14	13	12	11	10	9	8	7	6	5	4	3	2	1	0
	-	-	-	-	-	-	-	-	PINT7R	PINT6R	PINT5R	PINT4R	PINT3R	PINT2R	PINT1R	PINT0R
Initial value:	0	0	0	0	0	0	0	0	0	0	0	0	0	0	0	0
R/W:	R	R	R	R	R	R	R	R	R	R	R	R	R	R	R	R

Bit	Bit Name	Initial Value	R/W	Description
15 to 8	—	All 0	R	Reserved These bits are always read as 0. The write value should always be 0.
7	PINT7R	0	R	PINT Interrupt Request These bits indicate the status of the PINT7 to PINT0 interrupt requests. 0: No interrupt request at PINTn pin 1: Interrupt request at PINTn pin
6	PINT6R	0	R	
5	PINT5R	0	R	
4	PINT4R	0	R	
3	PINT3R	0	R	
2	PINT2R	0	R	
1	PINT1R	0	R	
0	PINT0R	0	R	

[Legend]

n = 7 to 0

chanhvinh.com

7.3.8 Bank Control Register (IBCR)

IBCR is a 16-bit register that enables or disables use of register banks for each interrupt priority level.

Bit:	15	14	13	12	11	10	9	8	7	6	5	4	3	2	1	0
	E15	E14	E13	E12	E11	E10	E9	E8	E7	E6	E5	E4	E3	E2	E1	-
Initial value:	0	0	0	0	0	0	0	0	0	0	0	0	0	0	0	0
R/W:	R/W	R/W	R/W	R/W	R/W	R/W	R/W	R/W	R/W	R/W	R/W	R/W	R/W	R/W	R/W	R

Bit	Bit Name	Initial Value	R/W	Description
15	E15	0	R/W	Enable
14	E14	0	R/W	These bits enable or disable use of register banks for interrupt priority levels 15 to 1. However, use of the register bank is always disabled by a user break interrupt. 0: Use of register banks is disabled 1: Use of register banks is enabled
13	E13	0	R/W	
12	E12	0	R/W	
11	E11	0	R/W	
10	E10	0	R/W	
9	E9	0	R/W	
8	E8	0	R/W	
7	E7	0	R/W	
6	E6	0	R/W	
5	E5	0	R/W	
4	E4	0	R/W	
3	E3	0	R/W	
2	E2	0	R/W	
1	E1	0	R/W	
0	—	0	R	Reserved This bit is always read as 0. The write value should always be 0.

chanhvinh.com

7.3.9 Bank Number Register (IBNR)

IBNR is a 16-bit register that enables or disables use of register banks and register bank overflow exception. IBNR also indicates the bank number to which saving is performed next through the bits BN3 to BN0.

Bit:	15	14	13	12	11	10	9	8	7	6	5	4	3	2	1	0
	BE[1:0]		BOVE	-	-	-	-	-	-	-	-	-	BN[3:0]			
Initial value:	0	0	0	0	0	0	0	0	0	0	0	0	0	0	0	0
R/W:	R/W	R/W	R/W	R	R	R	R	R	R	R	R	R	R	R	R	R

Bit	Bit Name	Initial Value	R/W	Description
15, 14	BE[1:0]	00	R/W	Register Bank Enable These bits enable or disable use of register banks. 00: Use of register banks is disabled for all interrupts. The setting of IBCR is ignored. 01: Use of register banks is enabled for all interrupts except NMI and user break. The setting of IBCR is ignored. 10: Reserved (setting prohibited) 11: Use of register banks is controlled by the setting of IBCR.
13	BOVE	0	R/W	Register Bank Overflow Enable Enables of disables register bank overflow exception. 0: Generation of register bank overflow exception is disabled 1: Generation of register bank overflow exception is enabled
12 to 4	—	All 0	R	Reserved These bits are always read as 0. The write value should always be 0.
3 to 0	BN[3:0]	0000	R	Bank Number These bits indicate the bank number to which saving is performed next. When an interrupt using register banks is accepted, saving is performed to the register bank indicated by these bits, and BN is incremented by 1. After BN is decremented by 1 due to execution of a RESBANK (restore from register bank) instruction, restoration from the register bank is performed.

chanhvinh.com

7.4 Interrupt Sources

There are six types of interrupt sources: NMI, user break, user debugging interface, IRQ, PINT, and on-chip peripheral modules. Each interrupt has a priority level (0 to 16), with 0 the lowest and 16 the highest. When set to level 0, that interrupt is masked at all times.

7.4.1 NMI Interrupt

The NMI interrupt has a priority level of 16 and is accepted at all times when the NMI mask bit (NMIM) in interrupt control register 0 (ICR0) is enabled. NMI interrupt requests are edge-detected, and the NMI edge select bit (NMIE) in ICR0 selects whether the rising edge or falling edge is detected.

Though the priority level of the NMI interrupt is 16, the NMI interrupt exception handling sets the interrupt mask level bits (I3 to I0) in the status register (SR) to level 15.

When the NMIM bit in ICR0 is set to 1 (NMI interrupt request is masked), the NMI interrupt is not generated, however the NMI edge corresponding to NMIE bit of ICR0 is detected and the NMI interrupt request is retained until the interrupt request is accepted. The status of the interrupt request can be checked by reading the NMI interrupt request bit (NMIF) in the ICR0. If 0 is written to the NMIM bit (NMI interrupt request is enabled) when the NMIF bit is set to 1, the NMI interrupt request that is retained is accepted. Once the NMIM bit is set to 0 (NMI interrupt request is enabled), the NMIM bit cannot be set to 1 again, because only 0 can be written to the NMIM bit. When the NME bit is changed, the NMI interrupt request that is retained is cleared.

When canceling software standby mode by the NMI interrupt, set the NMIM bit to 0 to enable the NMI interrupt request after confirming that the NMI interrupt request has been cleared in the NMIF. If software standby mode is entered when the NMIM bit is 1 (NMI interrupt request is masked), the NMI interrupt cannot cancel software standby mode. In this case, the NMI edge cannot be detected in software standby mode and the NMI interrupt is not generated even if software standby mode is canceled by cancel source other than NMI. When the NMI pin keeps level (low level after the falling edge or high level after the rising edge) in software standby mode until software standby mode is canceled by cancel source other than NMI (until the clock is initiated after the oscillation settling), that edge of the NMI in software standby mode can be detected.

When deep standby mode is entered, deep standby mode is canceled by the NMI interrupt regardless of the NMI mask bit setting. NMIM bit is initialized by a power-on reset after canceling deep standby mode.

When a sleep instruction is to be executed after 0 has been written to the NMIM bit (enabling the NMI), read the value of the NMIM bit before executing the sleep instruction.

chanhvinh.com

7.4.2 User Break Interrupt

A user break interrupt which occurs when a break condition set in the user break controller matches has a priority level of 15. The user break interrupt exception handling sets the I3 to I0 bits in SR to level 15. For user break interrupts, see section 8, User Break Controller.

7.4.3 User Debugging Interface Interrupt

The user debugging interface interrupt has a priority level of 15, and occurs at serial input of a user debugging interface interrupt instruction. User debugging interface interrupt requests are edge-detected and retained until they are accepted. The user debugging interface interrupt exception handling sets the I3 to I0 bits in SR to level 15. For user debugging interface interrupts, see section 50, User Debugging Interface.

7.4.4 IRQ Interrupts

IRQ interrupts are input from pins IRQ7 to IRQ0. For the IRQ interrupts, low-level, falling-edge, rising-edge, or both-edge detection can be selected individually for each pin by the IRQ sense select bits (IRQ71S to IRQ01S and IRQ70S to IRQ00S) in interrupt control register 1 (ICR1). The priority level can be set individually in a range from 0 to 15 for each pin by interrupt priority registers 01 and 02 (IPR01 and IPR02).

When using low-level sensing for IRQ interrupts, an interrupt request signal is sent to the interrupt controller while the IRQ7 to IRQ0 pins are low. An interrupt request signal is stopped being sent to the interrupt controller when the IRQ7 to IRQ0 pins are driven high. The status of the interrupt requests can be checked by reading the IRQ interrupt request bits (IRQ7F to IRQ0F) in the IRQ interrupt request register (IRQRR).

When using edge-sensing for IRQ interrupts, an interrupt request is detected due to change of the IRQ7 to IRQ0 pin states, and an interrupt request signal is sent to the interrupt controller. The result of IRQ interrupt request detection is retained until that interrupt request is accepted. Whether IRQ interrupt requests have been detected or not can be checked by reading the IRQ7F to IRQ0F bits in IRQRR. Writing 0 to these bits after reading them as 1 clears the result of IRQ interrupt request detection.

The IRQ interrupt exception handling sets the I3 to I0 bits in SR to the priority level of the accepted IRQ interrupt.

When returning from IRQ interrupt exception service routine, execute the RTE instruction after confirming that the interrupt request has been cleared by the IRQ interrupt request register (IRQRR) so as not to accidentally receive the interrupt request again.

chanhvinh.com

7.4.5 PINT Interrupts

PINT interrupts are input from pins PINT7 to PINT0. Input of the interrupt requests is enabled by the PINT enable bits (PINT7E to PINT0E) in the PINT interrupt enable register (PINTER). For the PINT7 to PINT0 interrupts, low-level or high-level detection can be selected individually for each pin by the PINT sense select bits (PINT7S to PINT0S) in interrupt control register 2 (ICR2). A single priority level in a range from 0 to 15 can be set for all PINT7 to PINT0 interrupts by bits 15 to 12 in interrupt priority register 05 (IPR05).

When using low-level sensing for the PINT7 to PINT0 interrupts, an interrupt request signal is sent to the interrupt controller while the PINT7 to PINT0 pins are low. An interrupt request signal is stopped being sent to the interrupt controller when the PINT7 to PINT0 pins are driven high. The status of the interrupt requests can be checked by reading the PINT interrupt request bits (PINT7R to PINT0R) in the PINT interrupt request register (PIRR). The above description also applies to when using high-level sensing, except for the polarity being reversed. The PINT interrupt exception handling sets the I3 to I0 bits in SR to the priority level of the PINT interrupt.

When returning from IRQ interrupt exception service routine, execute the RTE instruction after confirming that the interrupt request has been cleared by the PINT interrupt request register (PIRR) so as not to accidentally receive the interrupt request again.

chanhvinh.com

7.4.6 On-Chip Peripheral Module Interrupts

On-chip peripheral module interrupts are generated by the following on-chip peripheral modules:

- Direct memory access controller
- USB 2.0 host/function module
- Video display controller 4
- Image renderer
- Display out comparison unit
- JPEG codec unit
- OpenVG™-compliant Renesas graphics processor
- Compare match timer
- Bus state controller
- Watchdog timer
- Multi-function timer pulse unit 2
- Motor control PWM timer
- Sound generator
- A/D converter
- Serial sound interface
- Renesas SPDIF interface
- I^2C bus interface 3
- Serial communication interface with FIFO
- Clock-synchronized serial I/O module with FIFO
- Renesas serial peripheral interface
- Renesas quad serial peripheral interface
- Controller area network
- IEBus™ controller
- CD-ROM decoder
- NAND flash memory controller
- SD host interface
- MMC host interface
- Realtime clock
- Sampling rate converter

chanhvinh.com

As every source is assigned a different interrupt vector, the source does not need to be identified in the exception service routine. A priority level in a range from 0 to 15 can be set for each module by interrupt priority registers 05 to 26 (IPR05 to IPR26). The on-chip peripheral module interrupt exception handling sets the I3 to I0 bits in SR to the priority level of the accepted on-chip peripheral module interrupt.

chanhvinh.com

7.5 Interrupt Exception Handling Vector Table and Priority

Table 7.4 lists interrupt sources and their vector numbers, vector table address offsets, and interrupt priorities.

Each interrupt source is allocated a different vector number and vector table address offset. Vector table addresses are calculated from the vector numbers and vector table address offsets. In interrupt exception handling, the interrupt exception service routine start address is fetched from the vector table indicated by the vector table address. For details of calculation of the vector table address, see table 6.4 in section 6, Exception Handling.

The priorities of IRQ interrupts, PINT interrupts, and on-chip peripheral module interrupts can be set freely between 0 and 15 for each pin or module by setting interrupt priority registers 01, 02, and 05 to 26 (IPR01, IPR02, and IPR05 to IPR26). However, if two or more interrupts specified by the same IPR among IPR05 to IPR26 occur, the priorities are defined as shown in the IPR setting unit internal priority of table 7.4, and the priorities cannot be changed. A power-on reset assigns priority level 0 to IRQ interrupts, PINT interrupts, and on-chip peripheral module interrupts. If the same priority level is assigned to two or more interrupt sources and interrupts from those sources occur simultaneously, they are processed by the default priorities indicated in table 7.4.

chanhvinh.com

Table 7.4 Interrupt Exception Handling Vectors and Priorities

Interrupt Source		Interrupt Vector: Vector	Interrupt Vector: Vector Table Address Offset	Interrupt Priority (Initial Value)	Corresponding IPR (Bit)	IPR Setting Unit Internal Priority	Default Priority
NMI		11	H'0000002C to H'0000002F	16	—	—	High
User break		12	H'00000030 to H'00000033	15	—	—	
User debug interface		14	H'00000038 to H'0000003B	15	—	—	
IRQ	IRQ0	64	H'00000100 to H'00000103	0 to 15 (0)	IPR01 (15 to 12)	—	
	IRQ1	65	H'00000104 to H'00000107	0 to 15 (0)	IPR01 (11 to 8)	—	
	IRQ2	66	H'00000108 to H'0000010B	0 to 15 (0)	IPR01 (7 to 4)	—	
	IRQ3	67	H'0000010C to H'0000010F	0 to 15 (0)	IPR01 (3 to 0)	—	
	IRQ4	68	H'00000110 to H'00000113	0 to 15 (0)	IPR02 (15 to 12)	—	
	IRQ5	69	H'00000114 to H'00000117	0 to 15 (0)	IPR02 (11 to 8)	—	
	IRQ6	70	H'00000118 to H'0000011B	0 to 15 (0)	IPR02 (7 to 4)	—	
	IRQ7	71	H'0000011C to H'0000011F	0 to 15 (0)	IPR02 (3 to 0)	—	
PINT	PINT0	80	H'00000140 to H'00000143	0 to 15 (0)	IPR05 (15 to 12)	1	
	PINT1	81	H'00000144 to H'00000147			2	
	PINT2	82	H'00000148 to H'0000014B			3	
	PINT3	83	H'0000014C to H'0000014F			4	
	PINT4	84	H'00000150 to H'00000153			5	Low

chanhvinh.com

Interrupt Source			Interrupt Vector: Vector	Interrupt Vector: Vector Table Address Offset	Interrupt Priority (Initial Value)	Corresponding IPR (Bit)	IPR Setting Unit Internal Priority	Default Priority
PINT	PINT5		85	H'00000154 to H'00000157	0 to 15 (0)	IPR05 (15 to 12)	6	High
	PINT6		86	H'00000158 to H'0000015B			7	
	PINT7		87	H'0000015C to H'0000015F			8	
Direct memory access controller	Channel 0	DEI0	108	H'000001B0 to H'000001B3	0 to 15 (0)	IPR06 (15 to 12)	1	
		HEI0	109	H'000001B4 to H'000001B7			2	
	Channel 1	DEI1	112	H'000001C0 to H'000001C3	0 to 15 (0)	IPR06 (11 to 8)	1	
		HEI1	113	H'000001C4 to H'000001C7			2	
	Channel 2	DEI2	116	H'000001D0 to H'000001D3	0 to 15 (0)	IPR06 (7 to 4)	1	
		HEI2	117	H'000001D4 to H'000001D7			2	
	Channel 3	DEI3	120	H'000001E0 to H'000001E3	0 to 15 (0)	IPR06 (3 to 0)	1	
		HEI3	121	H'000001E4 to H'000001E7			2	
	Channel 4	DEI4	124	H'000001F0 to H'000001F3	0 to 15 (0)	IPR07 (15 to 12)	1	
		HEI4	125	H'000001F4 to H'000001F7			2	
	Channel 5	DEI5	128	H'00000200 to H'00000203	0 to 15 (0)	IPR07 (11 to 8)	1	
		HEI5	129	H'00000204 to H'00000207			2	
	Channel 6	DEI6	132	H'00000210 to H'00000213	0 to 15 (0)	IPR07 (7 to 4)	1	
		HEI6	133	H'00000214 to H'00000217			2	Low

chanhvinh.com

Interrupt Source			Interrupt Vector: Vector	Interrupt Vector: Vector Table Address Offset	Interrupt Priority (Initial Value)	Corresponding IPR (Bit)	IPR Setting Unit Internal Priority	Default Priority
Direct memory access controller	Channel 7	DEI7	136	H'00000220 to H'00000223	0 to 15 (0)	IPR07 (3 to 0)	1	High
		HEI7	137	H'00000224 to H'00000227			2	
	Channel 8	DEI8	140	H'00000230 to H'00000233	0 to 15 (0)	IPR08 (15 to 12)	1	
		HEI8	141	H'00000234 to H'00000237			2	
	Channel 9	DEI9	144	H'00000240 to H'00000243	0 to 15 (0)	IPR08 (11 to 8)	1	
		HEI9	145	H'00000244 to H'00000247			2	
	Channel 10	DEI10	148	H'00000250 to H'00000253	0 to 15 (0)	IPR08 (7 to 4)	1	
		HEI10	149	H'00000254 to H'00000257			2	
	Channel 11	DEI11	152	H'00000260 to H'00000263	0 to 15 (0)	IPR08 (3 to 0)	1	
		HEI11	153	H'00000264 to H'00000267			2	
	Channel 12	DEI12	156	H'00000270 to H'00000273	0 to 15 (0)	IPR09 (15 to 12)	1	
		HEI12	157	H'00000274 to H'00000277			2	
	Channel 13	DEI13	160	H'00000280 to H'00000283	0 to 15 (0)	IPR09 (11 to 8)	1	
		HEI13	161	H'00000284 to H'00000287			2	
	Channel 14	DEI14	164	H'00000290 to H'00000293	0 to 15 (0)	IPR09 (7 to 4)	1	
		HEI14	165	H'00000294 to H'00000297			2	Low

chanhvinh.com

Interrupt Source			Interrupt Vector: Vector	Interrupt Vector: Vector Table Address Offset	Interrupt Priority (Initial Value)	Corresponding IPR (Bit)	IPR Setting Unit Internal Priority	Default Priority
Direct memory access controller	Channel 15	DEI15	168	H'000002A0 to H'000002A3	0 to 15 (0)	IPR09 (3 to 0)	1	High
		HEI15	169	H'000002A4 to H'000002A7			2	
USB 2.0 host/ function module	USBI		170	H'000002A8 to H'000002AB	0 to 15 (0)	IPR10 (15 to 12)	—	
Video display controller 4	VI_VSYNC		171	H'000002AC to H'000002AF	0 to 15 (0)	IPR10 (11 to 8)	1	
	LO_VSYNC		172	H'000002B0 to H'000002B3			2	
	VSYNCERR		173	H'000002B4 to H'000002B7			3	
	VLINE		174	H'000002B8 to H'000002BB	0 to 15 (0)	IPR10 (7 to 4)	1	
	VFIELD		175	H'000002BC to H'000002BF			2	
	VBUFERR1		176	H'000002C0 to H'000002C3	0 to 15 (0)	IPR10 (3 to 0)	1	
	VBUFERR2		177	H'000002C4 to H'000002C7			2	
	VBUFERR3		178	H'000002C8 to H'000002CB			3	
	VBUFERR4		179	H'000002CC to H'000002CF			4	
Image renderer	IMRI		180	H'000002D0 to H'000002D3	0 to 15 (0)	IPR11 (15 to 12)	—	Low

chanhvinh.com

Interrupt Source			Interrupt Vector: Vector	Interrupt Vector: Vector Table Address Offset	Interrupt Priority (Initial Value)	Corresponding IPR (Bit)	IPR Setting Unit Internal Priority	Default Priority
JPEG codec unit	JEDI		181	H'000002D4 to H'000002D7	0 to 15 (0)	IPR11 (11 to 8)	1	High
	JDTI		182	H'000002D8 to H'000002DB			2	
Display out comparison unit	CMPI		183	H'000002DC to H'000002DF	0 to 15 (0)	IPR11 (7 to 4)	—	
OpenVG™-compliant Renesas graphics processor	INT3		184	H'000002E0 to H'000002E3	0 to 15 (0)	IPR11 (3 to 0)	1	
	INT2		185	H'000002E4 to H'000002E7			2	
	INT1		186	H'000002E8 to H'000002EB			3	
	INT0		187	H'000002EC to H'000002EF			4	
Compare match timer	Channel 0	CMI0	188	H'000002F0 to H'000002F3	0 to 15 (0)	IPR12 (15 to 12)	—	
	Channel 1	CMI1	189	H'000002F4 to H'000002F7	0 to 15 (0)	IPR12 (11 to 8)	—	
Bus state controller	CMI		190	H'000002F8 to H'000002FB	0 to 15 (0)	IPR12 (7 to 4)	—	
Watchdog timer	ITI		191	H'000002FC to H'000002FF	0 to 15 (0)	IPR12 (3 to 0)	—	
Multi-function timer pulse unit 2	Channel 0	TGI0A	192	H'00000300 to H'00000303	0 to 15 (0)	IPR13 (15 to 12)	1	
		TGI0B	193	H'00000304 to H'00000307			2	
		TGI0C	194	H'00000308 to H'0000030B			3	
		TGI0D	195	H'0000030C to H'0000030F			4	Low

chanhvinh.com

Interrupt Source			Interrupt Vector: Vector	Interrupt Vector: Vector Table Address Offset	Interrupt Priority (Initial Value)	Corresponding IPR (Bit)	IPR Setting Unit Internal Priority	Default Priority
Multi-function timer pulse unit 2	Channel 0	TCI0V	196	H'00000310 to H'00000313	0 to 15 (0)	IPR13 (11 to 8)	1	High
		TGI0E	197	H'00000314 to H'00000317			2	
		TGI0F	198	H'00000318 to H'0000031B			3	
	Channel 1	TGI1A	199	H'0000031C to H'0000031F	0 to 15 (0)	IPR13 (7 to 4)	1	
		TGI1B	200	H'00000320 to H'00000323			2	
		TCI1V	201	H'00000324 to H'00000327	0 to 15 (0)	IPR13 (3 to 0)	1	
		TCI1U	202	H'00000328 to H'0000032B			2	
	Channel 2	TGI2A	203	H'0000032C to H'0000032F	0 to 15 (0)	IPR14 (15 to 12)	1	
		TGI2B	204	H'00000330 to H'00000333			2	
		TCI2V	205	H'00000334 to H'00000337	0 to 15 (0)	IPR14 (11 to 8)	1	
		TCI2U	206	H'00000338 to H'0000033B			2	
	Channel 3	TGI3A	207	H'0000033C to H'0000033F	0 to 15 (0)	IPR14 (7 to 4)	1	
		TGI3B	208	H'00000340 to H'00000343			2	
		TGI3C	209	H'00000344 to H'00000347			3	
		TGI3D	210	H'00000348 to H'0000034B			4	
		TCI3V	211	H'0000034C to H'0000034F	0 to 15 (0)	IPR14 (3 to 0)	—	Low

chanhvinh.com

Interrupt Source			Interrupt Vector: Vector	Interrupt Vector: Vector Table Address Offset	Interrupt Priority (Initial Value)	Corresponding IPR (Bit)	IPR Setting Unit Internal Priority	Default Priority
Multi-function timer pulse unit 2	Channel 4	TGI4A	212	H'00000350 to H'00000353	0 to 15 (0)	IPR15 (15 to 12)	1	High
		TGI4B	213	H'00000354 to H'00000357			2	
		TGI4C	214	H'00000358 to H'0000035B			3	
		TGI4D	215	H'0000035C to H'0000035F			4	
		TCI4V	216	H'00000360 to H'00000363	0 to 15 (0)	IPR15 (11 to 8)	—	
Motor control PWM timer	Channel 1		217	H'00000364 to H'00000367	0 to 15 (0)	IPR15 (7 to 4)	—	
	Channel 2		218	H'00000368 to H'0000036B	0 to 15 (0)	IPR15 (3 to 0)	—	
Sound generator	Channel 0		219	H'0000036C to H'0000036F	0 to 15 (0)	IPR16 (15 to 12)	—	
	Channel 1		220	H'00000370 to H'00000373	0 to 15 (0)	IPR16 (11 to 8)	—	
	Channel 2		221	H'00000374 to H'00000377	0 to 15 (0)	IPR16 (7 to 4)	—	
	Channel 3		222	H'00000378 to H'0000037B	0 to 15 (0)	IPR16 (3 to 0)	—	
A/D converter	ADI		223	H'0000037C to H'0000037F	0 to 15 (0)	IPR17 (15 to 12)	—	Low

chanhvinh.com

Interrupt Source			Interrupt Vector: Vector	Interrupt Vector: Vector Table Address Offset	Interrupt Priority (Initial Value)	Corresponding IPR (Bit)	IPR Setting Unit Internal Priority	Default Priority
Serial sound interface	Channel 0	SSIF0	224	H'00000380 to H'00000383	0 to 15 (0)	IPR17 (11 to 8)	1	High
		SSIRXI0	225	H'00000384 to H'00000387			2	
		SSITXI0	226	H'00000388 to H'0000038B			3	
	Channel 1	SSII1	227	H'0000038C to H'0000038F	0 to 15 (0)	IPR17 (7 to 4)	1	
		SSIRTI1	228	H'00000390 to H'00000393			2	
	Channel 2	SSII2	229	H'00000394 to H'00000397	0 to 15 (0)	IPR17 (3 to 0)	1	
		SSIRTI2	230	H'00000398 to H'0000039B			2	
	Channel 3	SSII3	231	H'0000039C to H'0000039F	0 to 15 (0)	IPR18 (15 to 12)	1	
		SSIRTI3	232	H'000003A0 to H'000003A3			2	
	Channel 4	SSII4	233	H'000003A4 to H'000003A7	0 to 15 (0)	IPR18 (11 to 8)	1	
		SSIRTI4	234	H'000003A8 to H'000003AB			2	
	Channel 5	SSII5	235	H'000003AC to H'000003AF	0 to 15 (0)	IPR18 (7 to 4)	1	
		SSIRTI5	236	H'000003B0 to H'000003B3			2	
Renesas SPDIF interface	SPDIFI		237	H'000003B4 to H'000003B7	0 to 15 (0)	IPR18 (3 to 0)	—	Low

chanhvinh.com

Interrupt Source			Interrupt Vector: Vector	Interrupt Vector: Vector Table Address Offset	Interrupt Priority (Initial Value)	Corresponding IPR (Bit)	IPR Setting Unit Internal Priority	Default Priority
I²C bus interface 3	Channel 0	STPI0	238	H'000003B8 to H'000003BB	0 to 15 (0)	IPR19 (15 to 12)	1	High
		NAKI0	239	H'000003BC to H'000003BF			2	
		RXI0	240	H'000003C0 to H'000003C3			3	
		TXI0	241	H'000003C4 to H'000003C7			4	
		TEI0	242	H'000003C8 to H'000003CB			5	
	Channel 1	STPI1	243	H'000003CC to H'000003CF	0 to 15 (0)	IPR19 (11 to 8)	1	
		NAKI1	244	H'000003D0 to H'000003D3			2	
		RXI1	245	H'000003D4 to H'000003D7			3	
		TXI1	246	H'000003D8 to H'000003DB			4	
		TEI1	247	H'000003DC to H'000003DF			5	
	Channel 2	STPI2	248	H'000003E0 to H'000003E3	0 to 15 (0)	IPR19 (7 to 4)	1	
		NAKI2	249	H'000003E4 to H'000003E7			2	
		RXI2	250	H'000003E8 to H'000003EB			3	
		TXI2	251	H'000003EC to H'000003EF			4	
		TEI2	252	H'000003F0 to H'000003F3			5	Low

chanhvinh.com

Interrupt Source			Interrupt Vector: Vector	Interrupt Vector: Vector Table Address Offset	Interrupt Priority (Initial Value)	Corresponding IPR (Bit)	IPR Setting Unit Internal Priority	Default Priority
I²C bus interface 3	Channel 3	STPI3	253	H'000003F4 to H'000003F7	0 to 15 (0)	IPR19 (3 to 0)	1	High
		NAKI3	254	H'000003F8 to H'000003FB			2	
		RXI3	255	H'000003FC to H'000003FF			3	
		TXI3	256	H'00000400 to H'00000403			4	
		TEI3	257	H'00000404 to H'00000407			5	
Serial communi-cation interface with FIFO	Channel 0	BRI0	258	H'00000408 to H'0000040B	0 to 15 (0)	IPR20 (15 to 12)	1	
		ERI0	259	H'0000040C to H'0000040F			2	
		RXI0	260	H'00000410 to H'00000413			3	
		TXI0	261	H'00000414 to H'00000417			4	
	Channel 1	BRI1	262	H'00000418 to H'0000041B	0 to 15 (0)	IPR20 (11 to 8)	1	
		ERI1	263	H'0000041C to H'0000041F			2	
		RXI1	264	H'00000420 to H'00000423			3	
		TXI1	265	H'00000424 to H'00000427			4	
	Channel 2	BRI2	266	H'00000428 to H'0000042B	0 to 15 (0)	PR20 (7 to 4)	1	
		ERI2	267	H'0000042C to H'0000042F			2	
		RXI2	268	H'00000430 to H'00000433			3	
		TXI2	269	H'00000434 to H'00000437			4	Low

chanhvinh.com

Interrupt Source			Interrupt Vector: Vector	Interrupt Vector: Vector Table Address Offset	Interrupt Priority (Initial Value)	Corresponding IPR (Bit)	IPR Setting: Unit Internal Priority	Default Priority
Serial communi-cation interface with FIFO	Channel 3	BRI3	270	H'00000438 to H'0000043B	0 to 15 (0)	PR20 (3 to 0)	1	High
		ERI3	271	H'0000043C to H'0000043F			2	
		RXI3	272	H'00000440 to H'00000443			3	
		TXI3	273	H'00000444 to H'00000447			4	
	Channel 4	BRI4	274	H'00000448 to H'0000044B	0 to 15 (0)	IPR21 (15 to 12)	1	
		ERI4	275	H'0000044C to H'0000044F			2	
		RXI4	276	H'00000450 to H'00000453			3	
		TXI4	277	H'00000454 to H'00000457			4	
	Channel 5	BRI5	278	H'00000458 to H'0000045B	0 to 15 (0)	IPR21 (11 to 8)	1	
		ERI5	279	H'0000045C to H'0000045F			2	
		RXI5	280	H'00000460 to H'00000463			3	
		TXI5	281	H'00000464 to H'00000467			4	
	Channel 6	BRI6	282	H'00000468 to H'0000046B	0 to 15 (0)	IPR21 (7 to 4)	1	
		ERI6	283	H'0000046C to H'0000046F			2	
		RXI6	284	H'00000470 to H'00000473			3	
		TXI6	285	H'00000474 to H'00000477			4	Low

chanhvinh.com

Interrupt Source			Interrupt Vector: Vector	Interrupt Vector: Vector Table Address Offset	Interrupt Priority (Initial Value)	Corresponding IPR (Bit)	IPR Setting Unit: Internal Priority	Default Priority
Serial communi-cation interface with FIFO	Channel 7	BRI7	286	H'00000478 to H'0000047B	0 to 15 (0)	IPR21 (3 to 0)	1	High
		ERI7	287	H'0000047C to H'0000047F			2	
		RXI7	288	H'00000480 to H'00000483			3	
		TXI7	289	H'00000484 to H'00000487			4	
Clock-synchronized serial I/O module with FIFO	SIOFI		290	H'00000488 to H'0000048B	0 to 15 (0)	IPR22 (15 to 12)	—	
Controller area network	Channel 0	ERS0	291	H'0000048C to H'0000048F	0 to 15 (0)	IPR22 (11 to 8)	1	
		OVR0	292	H'00000490 to H'00000493			2	
		RM00	293	H'00000494 to H'00000497			3	
		RM10	294	H'00000498 to H'0000049B			4	
		SLE0	295	H'0000049C to H'0000049F			5	
	Channel 1	ERS1	296	H'000004A0 to H'000004A3	0 to 15 (0)	IPR22 (7 to 4)	1	
		OVR1	297	H'000004A4 to H'000004A7			2	
		RM01	298	H'000004A8 to H'000004AB			3	
		RM11	299	H'000004AC to H'000004AF			4	
		SLE1	300	H'000004B0 to H'000004B3			5	Low

chanhvinh.com

Interrupt Source			Interrupt Vector: Vector	Interrupt Vector: Vector Table Address Offset	Interrupt Priority (Initial Value)	Corresponding IPR (Bit)	IPR Setting Unit Internal Priority	Default Priority
Controller area network	Channel 2	ERS2	301	H'000004B4 to H'000004B7	0 to 15 (0)	IPR22 (3 to 0)	1	High
		OVR2	302	H'000004B8 to H'000004BB			2	
		RM02	303	H'000004BC to H'000004BF			3	
		RM12	304	H'000004C0 to H'000004C3			4	
		SLE2	305	H'000004C4 to H'000004C7			5	
Renesas serial peripheral interface	Channel 0	SPEI0	306	H'000004C8 to H'000004CB	0 to 15 (0)	IPR23 (15 to 12)	1	
		SPRI0	307	H'000004CC to H'000004CF			2	
		SPTI0	308	H'000004D0 to H'000004D3			3	
	Channel 1	SPEI1	309	H'000004D4 to H'000004D7	0 to 15 (0)	IPR23 (11 to 8)	1	
		SPRI1	310	H'000004D8 to H'000004DB			2	
		SPTI1	311	H'000004DC to H'000004DF			3	
Renesas quad serial peripheral interface	Channel 0	SPEI0	312	H'000004E0 to H'000004E3	0 to 15 (0)	IPR23 (7 to 4)	1	
		SPRI0	313	H'000004E4 to H'000004E7			2	
		SPTI0	314	H'000004E8 to H'000004EB			3	
	Channel 1	SPEI1	315	H'000004EC to H'000004EF	0 to 15 (0)	IPR23 (3 to 0)	1	
		SPRI1	316	H'000004F0 to H'000004F3			2	
		SPTI1	317	H'000004F4 to H'000004F7			3	Low

chanhvinh.com

Interrupt Source			Interrupt Vector: Vector	Interrupt Vector: Vector Table Address Offset	Interrupt Priority (Initial Value)	Corresponding IPR (Bit)	IPR Setting Unit Internal Priority	Default Priority
IEBus™ controller	IEB		318	H'000004F8 to H'000004FB	0 to 15 (0)	IPR24 (15 to 12)	—	High
CD-ROM decoder	ISY		319	H'000004FC to H'000004FF	0 to 15 (0)	IPR24 (11 to 8)	1	
	IERR		320	H'00000500 to H'00000503			2	
	ITARG		321	H'00000504 to H'00000507			3	
	ISEC		322	H'00000508 to H'0000050B			4	
	IBUF		323	H'0000050C to H'0000050F			5	
	IREADY		324	H'00000510 to H'00000513			6	
NAND flash memory controller	FLSTEI		325	H'00000514 to H'00000517	0 to 15 (0)	IPR24 (7 to 4)	1	
	FLTENDI		326	H'00000518 to H'0000051B			2	
	FLTREQ0I		327	H'0000051C to H'0000051F			3	
	FLTREQ1I		328	H'00000520 to H'00000523			4	
MMC host interface	MMC0		329	H'00000524 to H'00000527	0 to 15 (0)	IPR24 (3 to 0)	1	
	MMC1		330	H'00000528 to H'0000052B			2	
	MMC2		331	H'0000052C to H'0000052F			3	
SD host interface	Channel 0	SDHI0_3	332	H'00000530 to H'00000533	0 to 15 (0)	IPR25 (15 to 12)	1	
		SDHI0_0	333	H'00000534 to H'00000537			2	
		SDHI0_1	334	H'00000538 to H'0000053B			3	
	Channel 1	SDHI1_3	335	H'0000053C to H'0000053F	0 to 15 (0)	IPR25 (11 to 8)	1	
		SDHI1_0	336	H'00000540 to H'00000543			2	
		SDHI1_1	337	H'00000544 to H'00000547			3	
Realtime clock	ARM		338	H'00000548 to H'0000054B	0 to 15 (0)	IPR25 (7 to 4)	1	
	PRD		339	H'0000054C to H'0000054F			2	
	CUP		340	H'00000550 to H'00000553			3	Low

chanhvinh.com

Interrupt Source			Interrupt Vector: Vector	Interrupt Vector: Vector Table Address Offset	Interrupt Priority (Initial Value)	Corresponding IPR (Bit)	IPR Setting Unit Internal Priority	Default Priority
Sampling rate converter	Channel 0	OVF0	341	H'00000554 to H'00000557	0 to 15 (0)	IPR26 (15 to 12)	1	High
		UDF0	342	H'00000558 to H'0000055B			2	
		CEF0	343	H'0000055C to H'0000055F			3	
		ODFI0	344	H'00000560 to H'00000563			4	
		IDEI0	345	H'00000564 to H'00000567			5	
	Channel 1	OVF1	346	H'00000568 to H'0000056B	0 to 15 (0)	IPR26 (11 to 8)	1	
		UDF1	347	H'0000056C to H'0000056F			2	
		CEF1	348	H'00000570 to H'00000573			3	
		ODFI1	349	H'00000574 to H'00000577			4	
		IDEI1	350	H'00000578 to H'0000057B			5	
	Channel 2	OVF2	351	H'0000057C to H'0000057F	0 to 15 (0)	IPR26 (7 to 4)	1	
		UDF2	352	H'00000580 to H'00000583			2	
		CEF2	353	H'00000584 to H'00000587			3	
		ODFI2	354	H'00000588 to H'0000058B			4	
		IDEI2	355	H'0000058C to H'0000058F			5	Low

chanhvinh.com

7.6 Operation

7.6.1 Interrupt Operation Sequence

The sequence of interrupt operations is described below. Figure 7.2 shows the operation flow.

1. The interrupt request sources send interrupt request signals to the interrupt controller.
2. The interrupt controller selects the highest-priority interrupt from the interrupt requests sent, following the priority levels set in interrupt priority registers 01, 02, and 05 to 26 (IPR01, IPR02, and IPR05 to IPR26). Lower priority interrupts are ignored*. If two of these interrupts have the same priority level or if multiple interrupts occur within a single IPR, the interrupt with the highest priority is selected, according to the default priority and IPR setting unit internal priority shown in table 7.4.
3. The priority level of the interrupt selected by the interrupt controller is compared with the interrupt level mask bits (I3 to I0) in the status register (SR) of the CPU. If the interrupt request priority level is equal to or less than the level set in bits I3 to I0, the interrupt request is ignored. If the interrupt request priority level is higher than the level in bits I3 to I0, the interrupt controller accepts the interrupt and sends an interrupt request signal to the CPU.
4. The CPU detects the interrupt request sent from the interrupt controller when the CPU decodes the instruction to be executed. Instead of executing the decoded instruction, the CPU starts interrupt exception handling (figure 7.4).
5. The interrupt exception service routine start address is fetched from the exception handling vector table corresponding to the accepted interrupt.
6. The status register (SR) is saved onto the stack, and the priority level of the accepted interrupt is copied to bits I3 to I0 in SR.
7. The program counter (PC) is saved onto the stack.
8. The CPU jumps to the fetched interrupt exception service routine start address and starts executing the program. The jump that occurs is not a delayed branch.

chanhvinh.com

Notes: The interrupt source flag should be cleared in the interrupt handler. After clearing the interrupt source flag, "time from occurrence of interrupt request until interrupt controller identifies priority, compares it with mask bits in SR, and sends interrupt request signal to CPU" shown in table 7.5 is required before the interrupt source sent to the CPU is actually cancelled. To ensure that an interrupt request that should have been cleared is not inadvertently accepted again, read the interrupt source flag after it has been cleared, and then execute an RTE instruction.

* Interrupt requests that are designated as edge-sensing are held pending until the interrupt requests are accepted. IRQ interrupts, however, can be cancelled by accessing the IRQ interrupt request register (IRQRR). For details, see section 7.4.4, IRQ Interrupts.
  Interrupts held pending due to edge-sensing are cleared by a power-on reset.

chanhvinh.com

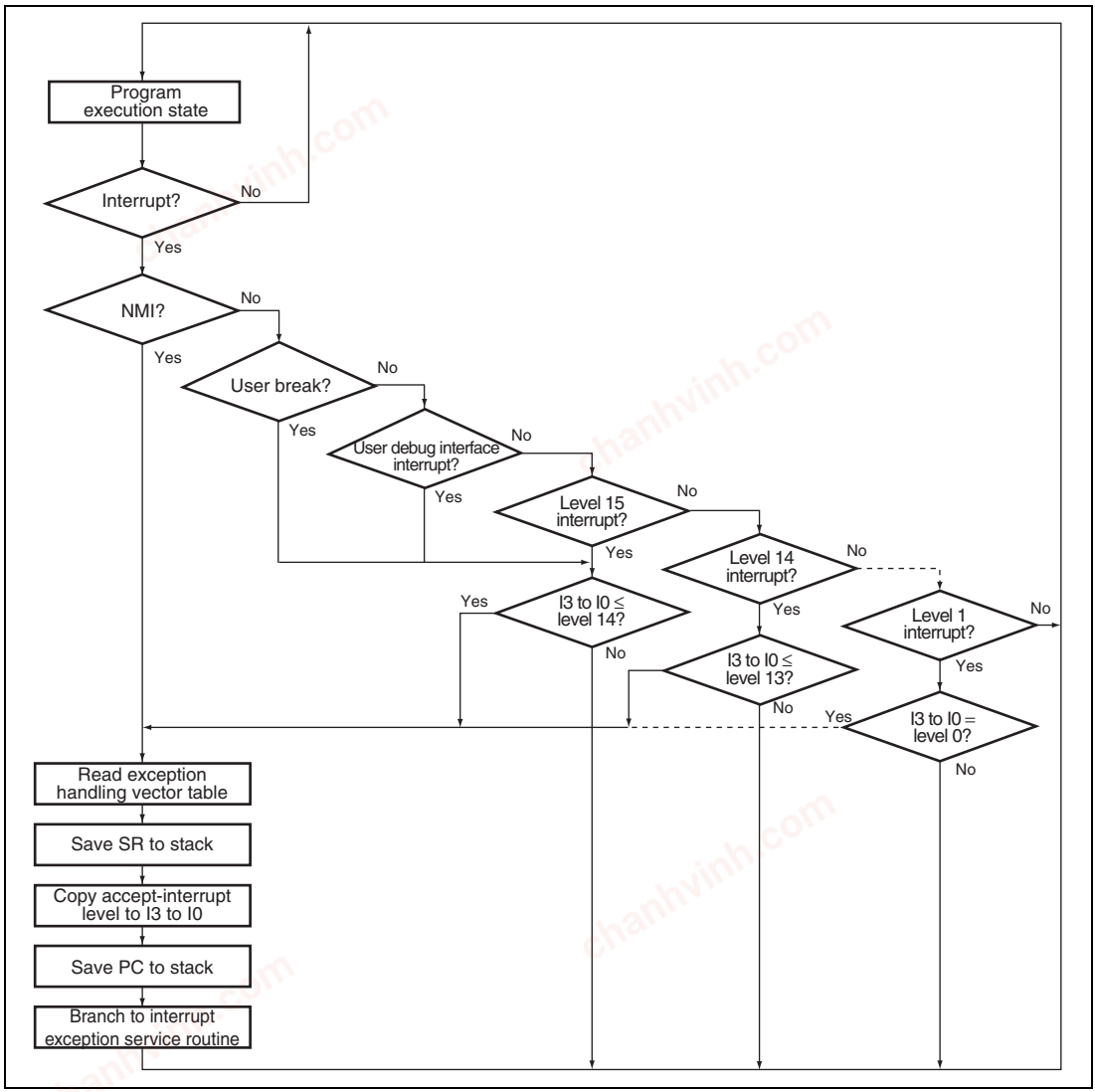

Figure 7.2 Interrupt Operation Flow

chanhvinh.com

7.6.2 Stack after Interrupt Exception Handling

Figure 7.3 shows the stack after interrupt exception handling.

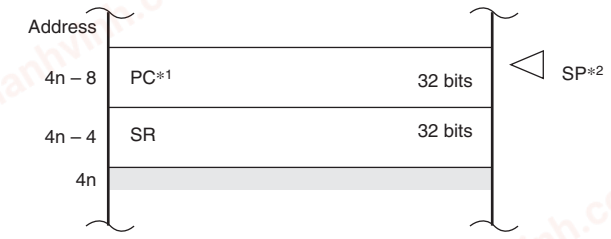

Notes: 1. PC: Start address of the next instruction (return destination instruction) after the executed instruction
2. Always make sure that SP is a multiple of 4.

Figure 7.3 Stack after Interrupt Exception Handling

chanhvinh.com

7.7 Interrupt Response Time

Table 7.5 lists the interrupt response time, which is the time from the occurrence of an interrupt request until the interrupt exception handling starts and fetching of the first instruction in the exception service routine begins. The interrupt processing operations differ in the cases when banking is disabled, when banking is enabled without register bank overflow, and when banking is enabled with register bank overflow. Figures 7.4 and 7.5 show examples of pipeline operation when banking is disabled. Figures 7.6 and 7.7 show examples of pipeline operation when banking is enabled without register bank overflow. Figures 7.8 and 7.9 show examples of pipeline operation when banking is enabled with register bank overflow.

Table 7.5 Interrupt Response Time

Item			Number of States								Remarks
			NMI	User break	User Debugging Interface	IRQ, PINT	USB 2.0 host/ function module	Serial Communi-cation Interface with FIFO	Peripheral Modules 1*3	Peripheral Modules 2*4	
Time from occurrence of interrupt request until interrupt controller identifies priority, compares it with mask bits in SR, and sends interrupt request signal to CPU			2 Icyc + 2 P1cyc + 1 P0cyc	3 Icyc	2 Icyc + 1 P0cyc	2 Icyc + 3 P1cyc + 1 P0cyc	2 Icyc + 2 Bcyc + 2 P1cyc	2 Icyc + 4 Bcyc + 1 P1cyc	2 Icyc + 4 Bcyc + 1 P0cyc	2 Icyc + 2 Bcyc	
Time from input of interrupt request signal to CPU until sequence currently being executed is completed, interrupt exception handling starts, and first instruction in interrupt exception service routine is fetched	No register banking	Min.	3 Icyc + m1 + m2								Min. is when the interrupt wait time is zero. Max. is when a higher-priority interrupt request has occurred during interrupt exception handling.
		Max.	4 Icyc + 2(m1 + m2) + m3								

chanhvinh.com

Item			Number of States								Remarks
			NMI	User break	User Debugging Interface	IRQ, PINT	USB 2.0 host/ function module	Serial Communi-cation Interface with FIFO	Peripheral Modules 1*3	Peripheral Modules 2*4	
Time from input of interrupt request signal to CPU until sequence currently being executed is completed, interrupt exception handling starts, and first instruction in interrupt exception service routine is fetched	Register banking without register bank overflow	Min.	—		3 Icyc + m1 + m2						Min. is when the interrupt wait time is zero. Max. is when an interrupt request has occurred during execution of the RESBANK instruction.
		Max.	—		12 Icyc + m1 + m2						
	Register banking with register bank overflow	Min.	—		3 Icyc + m1 + m2						Min. is when the interrupt wait time is zero. Max. is when an interrupt request has occurred during execution of the RESBANK instruction.
		Max.	—		3 Icyc + m1 + m2 + 19(m4)						

chanhvinh.com

Item			Number of States								Remarks
			NMI	User break	User Debugging Interface	IRQ, PINT	USB 2.0 host/ function module	Serial Communi-cation Interface with FIFO	Peripheral Modules 1*3	Peripheral Modules 2*4	
Interrupt response time	No register banking	Min.	5 Icyc + 2 P1cyc + 1 P0cyc + m1 + m2	6 Icyc + m1 + m2	5 Icyc + 1 P0cyc + m1 + m2	5 Icyc + 3 P1cyc + 1 P0cyc + m1 + m2	5 Icyc + 2 Bcyc + 2 P1cyc + m1 + m2	5 Icyc + 4 Bcyc + 1 P1cyc + m1 + m2	5 Icyc + 4 Bcyc + 1 P0cyc + m1 + m2	5 Icyc + 2 Bcyc + m1 + m2	266-MHz operation*1*2: 0.029 to 0.101 µs
		Max.	6 Icyc + 2 P1cyc + 1 P0cyc + 2(m1 + m2) + m3	7 Icyc + 2(m1 + m2) + m3	6 Icyc + 1 P0cyc + 2(m1 + m2) + m3	6 Icyc + 3 P1cyc + 1 P0cyc + 2(m1 + m2) + m3	6 Icyc + 2 Bcyc + 2 P1cyc + 2(m1 + m2) + m3	6 Icyc + 4 Bcyc + 1 P1cyc + 2(m1 + m2) + m3	6 Icyc + 4 Bcyc + 1 P0cyc + 2(m1 + m2) + m3	6 Icyc + 2 Bcyc + 2(m1 + m2) + m3	266-MHz operation*1*2: 0.044 to 0.116 µs
	Register banking without register bank overflow	Min.	—		5 Icyc + 1 P0cyc + m1 + m2	5 Icyc + 3 P1cyc + 1 P0cyc + m1 + m2	5 Icyc + 2 Bcyc + 2 P1cyc + m1 + m2	5 Icyc + 4 Bcyc + 1 P1cyc + m1 + m2	5 Icyc + 4 Bcyc + 1 P0cyc + m1 + m2	5 Icyc + 2 Bcyc + m1 + m2	266-MHz operation*1*2: 0.041 to 0.101 µs
		Max.	—		14 Icyc + 1 P0cyc + m1 + m2	14 Icyc + 3 P1cyc + 1 P0cyc + m1 + m2	14 Icyc + 2 Bcyc + 2 P1cyc + m1 + m2	14 Icyc + 4 Bcyc + 1 P1cyc + m1 + m2	14 Icyc + 4 Bcyc + 1 P0cyc + m1 + m2	14 Icyc + 2 Bcyc + m1 + m2	266-MHz operation*1*2: 0.075 to 0.135 µs
	Register banking with register bank overflow	Min.	—		5 Icyc + 1 P0cyc + m1 + m2	5 Icyc + 3 P1cyc + 1 P0cyc + m1 + m2	5 Icyc + 2 Bcyc + 2 P1cyc + m1 + m2	5 Icyc + 4 Bcyc + 1 P1cyc + m1 + m2	5 Icyc + 4 Bcyc + 1 P0cyc + m1 + m2	5 Icyc + 2 Bcyc + m1 + m2	266-MHz operation*1*2: 0.041 to 0.102 µs
		Max.	—		5 Icyc + 1 P0cyc + m1 + m2 + 19(m4)	5 Icyc + 3 P1cyc + 1 P0cyc + m1 + m2 + 19(m4)	5 Icyc + 2 Bcyc + 2 P1cyc + m1 + m2 + 19(m4)	5 Icyc + 4 Bcyc + 1 P1cyc + m1 + m2 + 19(m4)	5 Icyc + 4 Bcyc + 1 P0cyc + m1 + m2 + 19(m4)	5 Icyc + 2 Bcyc + m1 + m2 + 19(m4)	266-MHz operation*1*2: 0.112 to 0.173 µs

chanhvinh.com

Notes: m1 to m4 are the number of states needed for the following memory accesses.

m1: Vector address read (longword read)

m2: SR save (longword write)

m3: PC save (longword write)

m4: Banked registers (R0 to R14, GBR, MACH, MACL, and PR) are restored from the stack.

1. In the case that m1 = m2 = m3 = m4 = 1 Icyc.
2. In the case that (Iϕ, Bϕ, P1ϕ, P0ϕ) = (266.67 MHz, 133.33 MHz, 66.67 MHz, 33.33 MHz).
3. Compare match timer, motor control PWM timer, multi-function timer pulse unit 2, controller area network, IEBus™ controller, and sound generator.
4. Peripheral modules other than USB 2.0 host/function module, serial communication interface with FIFO, and peripheral modules 1.

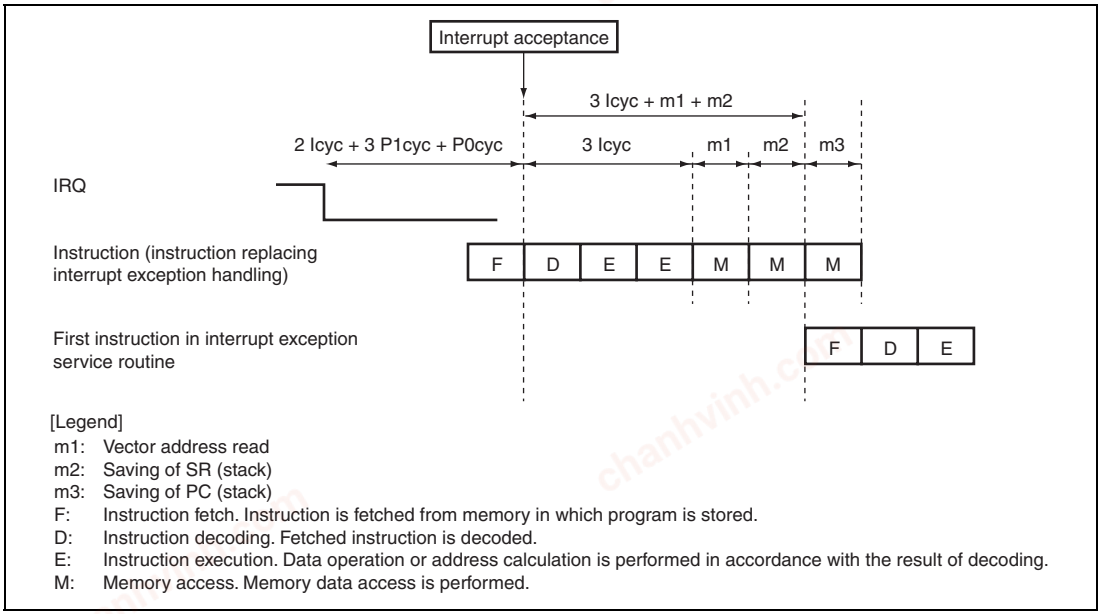

Figure 7.4 Example of Pipeline Operation when IRQ Interrupt is Accepted (No Register Banking)

chanhvinh.com

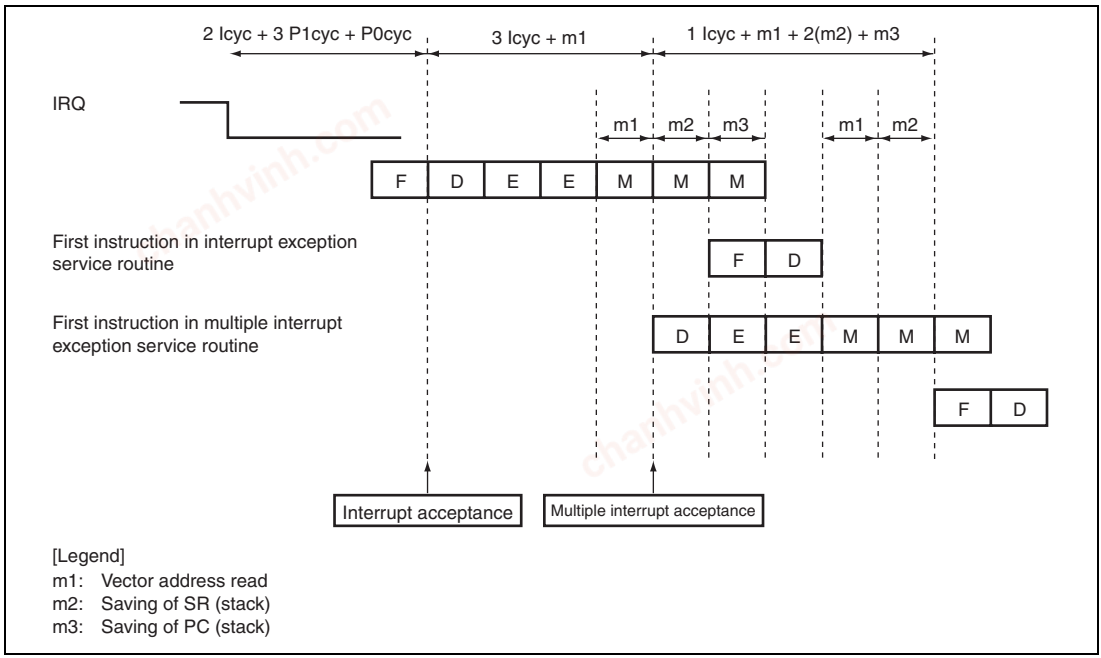

Figure 7.5 Example of Pipeline Operation for Multiple Interrupts (No Register Banking)

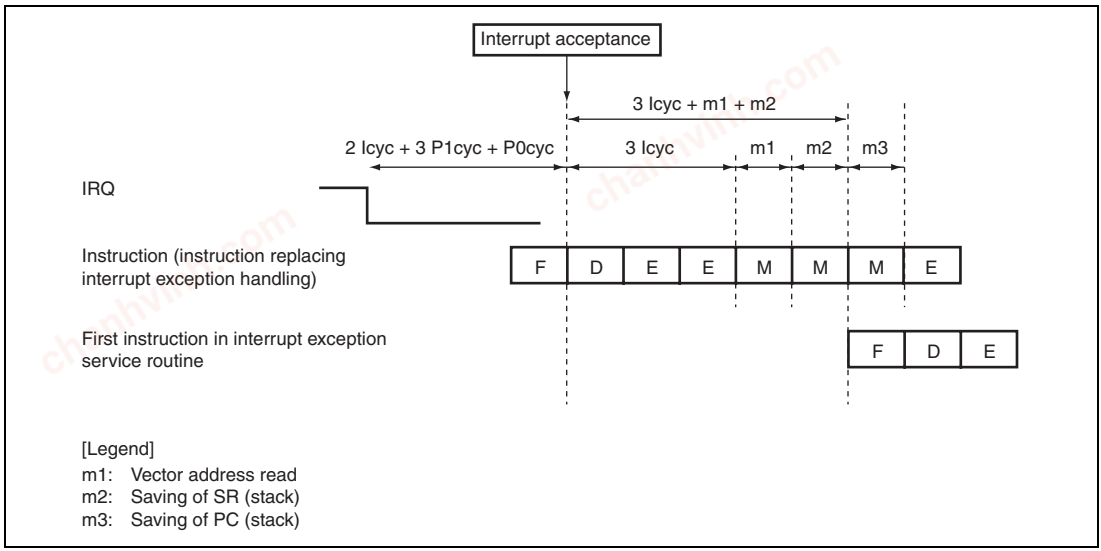

Figure 7.6 Example of Pipeline Operation when IRQ Interrupt is Accepted (Register Banking without Register Bank Overflow)

chanhvinh.com

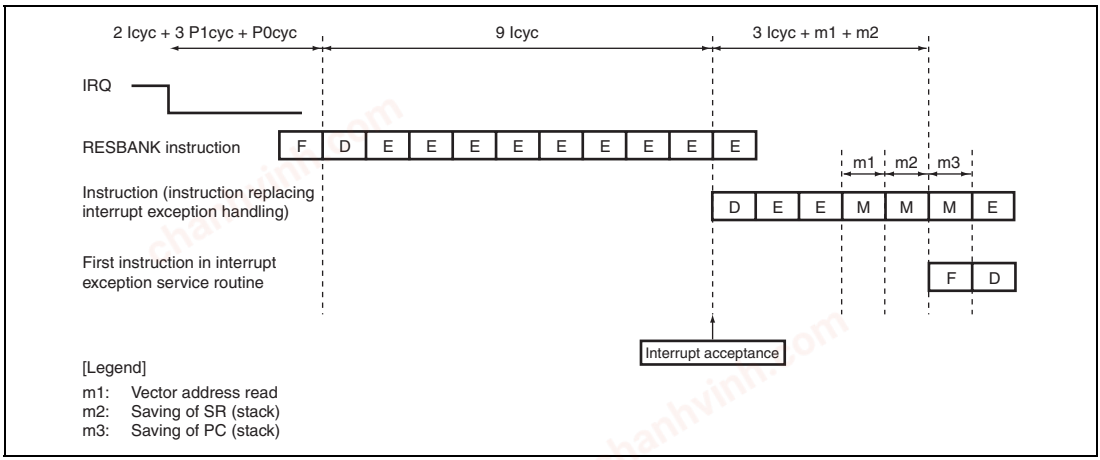

Figure 7.7 Example of Pipeline Operation when Interrupt is Accepted during RESBANK Instruction Execution (Register Banking without Register Bank Overflow)

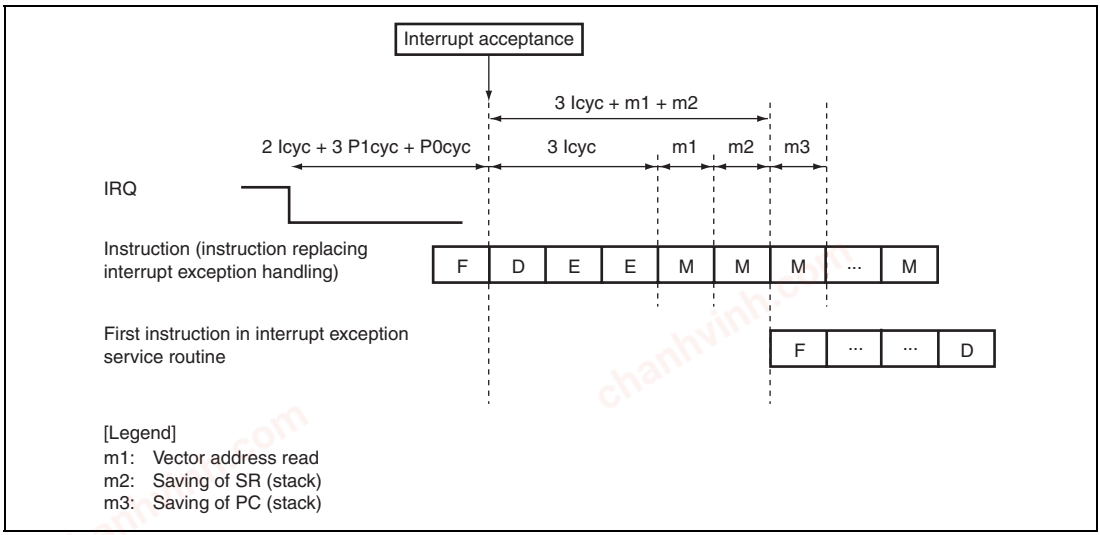

Figure 7.8 Example of Pipeline Operation when IRQ Interrupt is Accepted (Register Banking with Register Bank Overflow)

chanhvinh.com

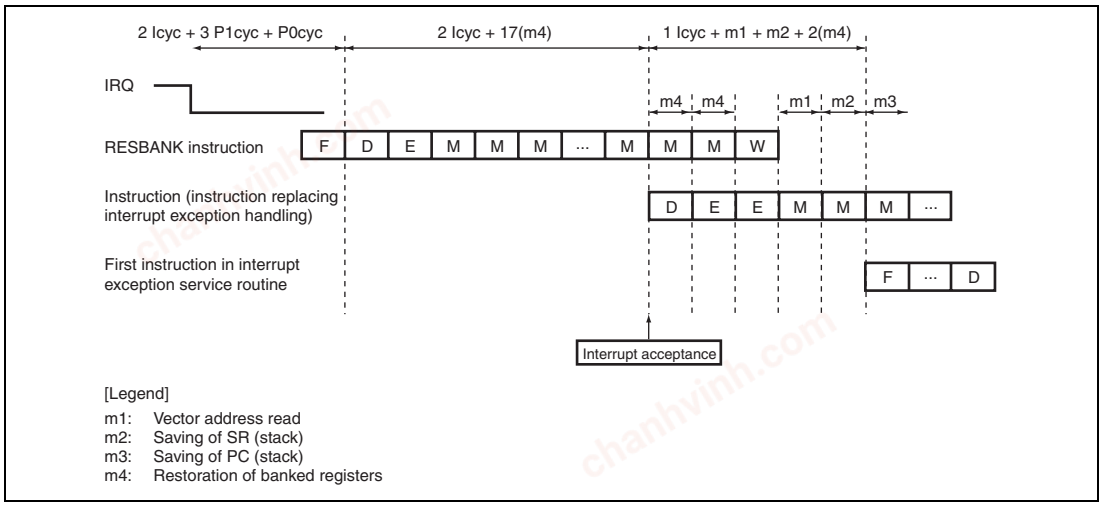

Figure 7.9 Example of Pipeline Operation when Interrupt is Accepted during RESBANK Instruction Execution (Register Banking with Register Bank Overflow)

chanhvinh.com

7.8 Register Banks

This LSI has fifteen register banks used to perform register saving and restoration required in the interrupt processing at high speed. Figure 7.10 shows the register bank configuration.

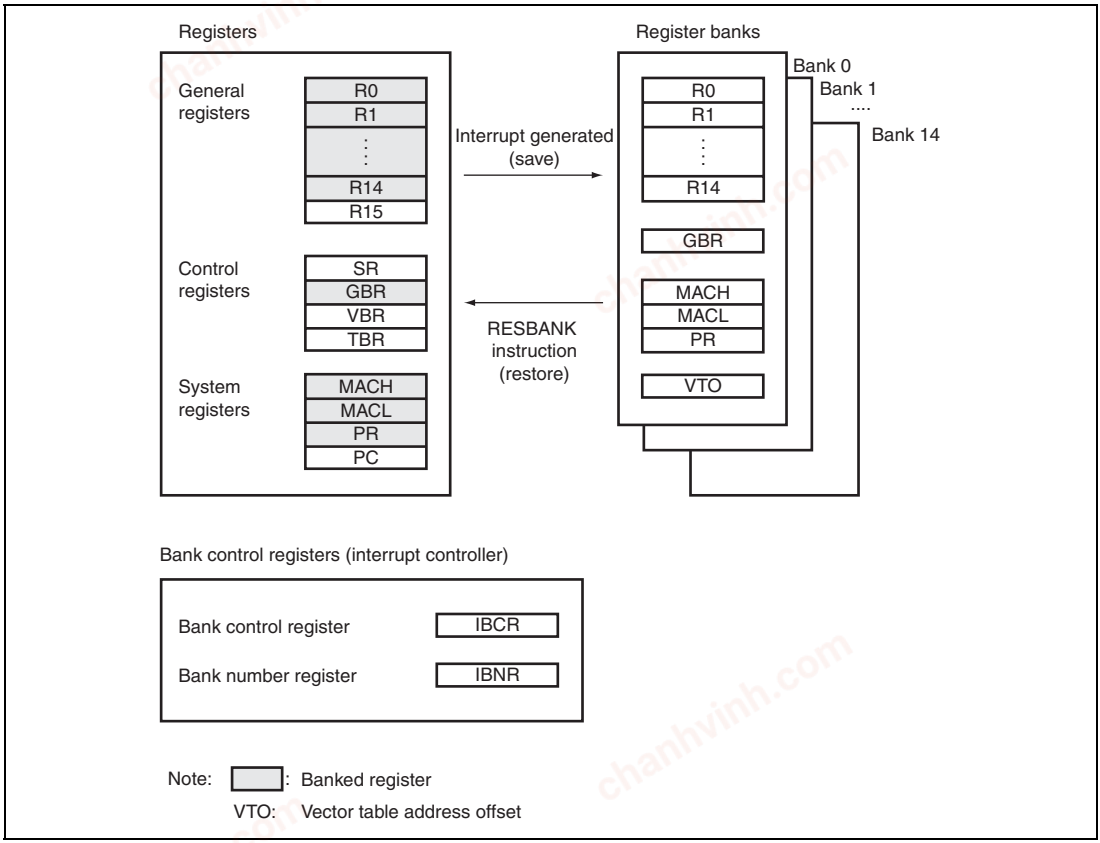

Figure 7.10 Overview of Register Bank Configuration

chanhvinh.com

7.8.1 Banked Register and Input/Output of Banks

(1) Banked Register

The contents of the general registers (R0 to R14), global base register (GBR), multiply and accumulate registers (MACH and MACL), and procedure register (PR), and the vector table address offset are banked.

(2) Input/Output of Banks

This LSI has fifteen register banks, bank 0 to bank 14. Register banks are stacked in first-in last-out (FILO) sequence. Saving takes place in order, beginning from bank 0, and restoration takes place in the reverse order, beginning from the last bank saved to.

7.8.2 Bank Save and Restore Operations

(1) Saving to Bank

Figure 7.11 shows register bank save operations. The following operations are performed when an interrupt for which usage of register banks is allowed is accepted by the CPU:

a. Assume that the bank number bit value in the bank number register (IBNR), BN, is i before the interrupt is generated.
b. The contents of registers R0 to R14, GBR, MACH, MACL, and PR, and the interrupt vector table address offset (VTO) of the accepted interrupt are saved in the bank indicated by BN, bank i.
c. The BN value is incremented by 1.

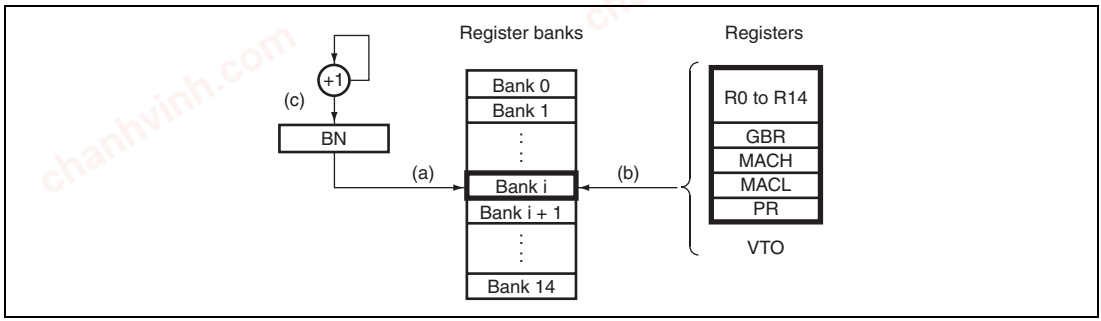

Figure 7.11 Bank Save Operations

chanhvinh.com

Figure 7.12 shows the timing for saving to a register bank. Saving to a register bank takes place between the start of interrupt exception handling and the start of fetching the first instruction in the interrupt exception service routine.

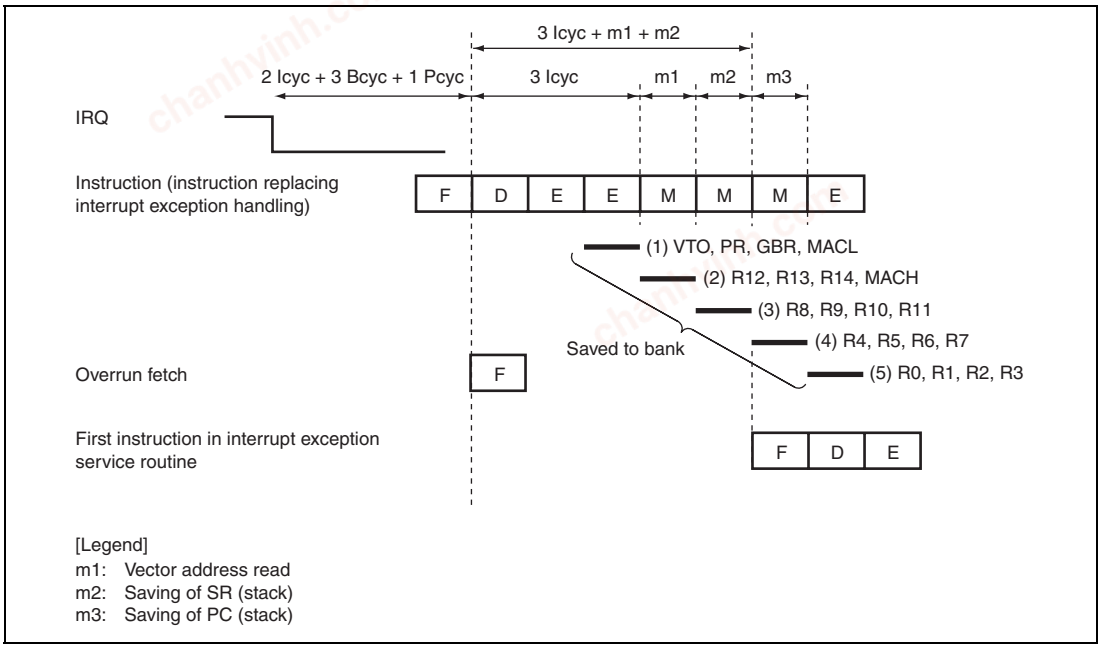

Figure 7.12 Bank Save Timing

(2) Restoration from Bank

The RESBANK (restore from register bank) instruction is used to restore data saved in a register bank. After restoring data from the register banks with the RESBANK instruction at the end of the interrupt exception service routine, execute the RTE instruction to return from interrupt exception service routine.

chanhvinh.com

7.8.3 Save and Restore Operations after Saving to All Banks

If an interrupt occurs and usage of the register banks is enabled for the interrupt accepted by the CPU in a state where saving has been performed to all register banks, automatic saving to the stack is performed instead of register bank saving if the BOVE bit in the bank number register (IBNR) is cleared to 0. If the BOVE bit in IBNR is set to 1, register bank overflow exception occurs and data is not saved to the stack.

Save and restore operations when using the stack are as follows:

(1) Saving to Stack

1. The status register (SR) and program counter (PC) are saved to the stack during interrupt exception handling.
2. The contents of the banked registers (R0 to R14, GBR, MACH, MACL, and PR) are saved to the stack. The registers are saved to the stack in the order of MACL, MACH, GBR, PR, R14, R13, …, R1, and R0.
3. The register bank overflow bit (BO) in SR is set to 1.
4. The bank number bit (BN) value in the bank number register (IBNR) remains set to the maximum value of 15.

(2) Restoration from Stack

When the RESBANK (restore from register bank) instruction is executed with the register bank overflow bit (BO) in SR set to 1, the CPU operates as follows:

1. The contents of the banked registers (R0 to R14, GBR, MACH, MACL, and PR) are restored from the stack. The registers are restored from the stack in the order of R0, R1, …, R13, R14, PR, GBR, MACH, and MACL.
2. The bank number bit (BN) value in the bank number register (IBNR) remains set to the maximum value of 15.

chanhvinh.com

7.8.4 Register Bank Exception

There are two register bank exceptions (register bank errors): register bank overflow and register bank underflow.

(1) Register Bank Overflow

This exception occurs if, after data has been saved to all of the register banks, an interrupt for which register bank use is allowed is accepted by the CPU, and the BOVE bit in the bank number register (IBNR) is set to 1. In this case, the bank number bit (BN) value in the bank number register (IBNR) remains set to the bank count of 15 and saving is not performed to the register bank.

(2) Register Bank Underflow

This exception occurs if the RESBANK (restore from register bank) instruction is executed when no data has been saved to the register banks. In this case, the values of R0 to R14, GBR, MACH, MACL, and PR do not change. In addition, the bank number bit (BN) value in the bank number register (IBNR) remains set to 0.

7.8.5 Register Bank Error Exception Handling

When a register bank error occurs, register bank error exception handling starts. When this happens, the CPU operates as follows:

1. The exception service routine start address which corresponds to the register bank error that occurred is fetched from the exception handling vector table.
2. The status register (SR) is saved to the stack.
3. The program counter (PC) is saved to the stack. The PC value saved is the start address of the instruction to be executed after the last executed instruction for a register bank overflow, and the start address of the executed RESBANK instruction for a register bank underflow. To prevent multiple interrupts from occurring at a register bank overflow, the interrupt priority level that caused the register bank overflow is written to the interrupt mask level bits (I3 to I0) of the status register (SR).
4. Program execution starts from the exception service routine start address.

chanhvinh.com

7.9 Data Transfer with Interrupt Request Signals

Interrupt request signals can be used to activate the direct memory access controller and transfer data.

Interrupt sources that are designated to activate the direct memory access controller are masked without being input to the interrupt controller. The mask condition is as follows:

Mask condition = DME • (DE0 • interrupt source select 0 + DE1 • interrupt source select 1 + DE2 • interrupt source select 2 + DE3 • interrupt source select 3 + DE4 • interrupt source select 4 + DE5 • interrupt source select 5 + DE6 • interrupt source select 6 + DE7 • interrupt source select 7 + DE8 • interrupt source select 8 + DE9 • interrupt source select 9 + DE10 • interrupt source select 10 + DE11 • interrupt source select 11 + DE12 • interrupt source select 12 + DE13 • interrupt source select 13 + DE14 • interrupt source select 14 + DE15 • interrupt source select 15)

Figure 7.13 shows a block diagram of interrupt control.

Here, DME is bit 0 in DMAOR of the direct memory access controller, and DEn (n = 0 to 15) is bit 0 in CHCR_0 to CHCR_15 of the direct memory access controller. For details, see section 11, Direct Memory Access Controller.

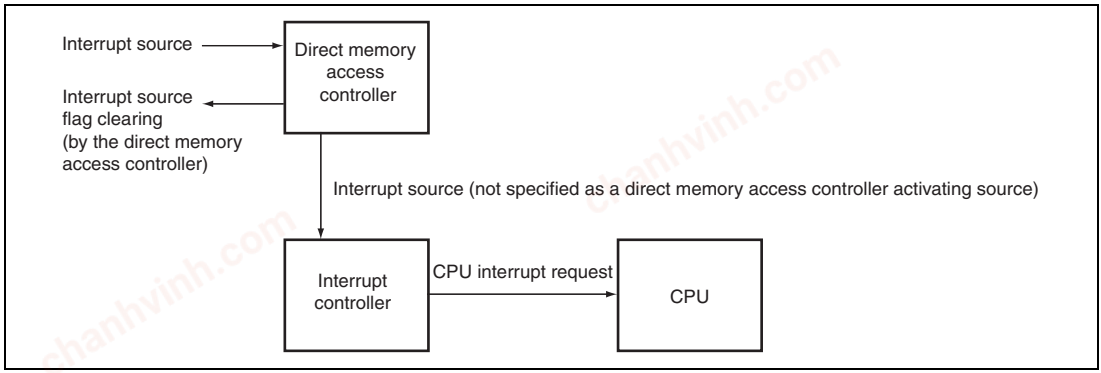

Figure 7.13 Interrupt Control Block Diagram

chanhvinh.com

7.9.1 Handling Interrupt Request Signals as Sources for CPU Interrupt but Not Direct Memory Access Controller Activating

1 Do not select direct memory access controller activating sources or clear the DME bit to 0. If, direct memory access controller activating sources are selected, clear the DE bit to 0 for the relevant channel of the direct memory access controller.
2. When interrupts occur, interrupt requests are sent to the CPU.
3. The CPU clears the interrupt source and performs the necessary processing in the interrupt exception service routine.

7.9.2 Handling Interrupt Request Signals as Sources for Activating Direct Memory Access Controller but Not CPU Interrupt

1. Select direct memory access controller activating sources and set both the DE and DME bits to 1. This masks CPU interrupt sources regardless of the interrupt priority register settings.
2. Activating sources are applied to the direct memory access controller when interrupts occur.
3. The direct memory access controller clears the interrupt sources when starting transfer.

chanhvinh.com

7.10 Usage Note

7.10.1 Timing to Clear an Interrupt Source

The interrupt source flags should be cleared in the interrupt exception service routine. After clearing the interrupt source flag, "time from occurrence of interrupt request until interrupt controller identifies priority, compares it with mask bits in SR, and sends interrupt request signal to CPU" shown in table 7.5 is required before the interrupt source sent to the CPU is actually cancelled. To ensure that an interrupt request that should have been cleared is not inadvertently accepted again, read* the interrupt source flag after it has been cleared, and then execute an RTE instruction.

Note: * When clearing the USB 2.0 host/function module interrupt source flag, read the flag three times after clearing it.

chanhvinh.com

chanhvinh.com
chanhvinh.com
chanhvinh.com

chanhvinh.com

Section 8 User Break Controller

The user break controller provides functions that simplify program debugging. These functions make it easy to design an effective self-monitoring debugger, enabling the chip to debug programs without using an in-circuit emulator. Instruction fetch or data read/write (bus cycle (CPU or direct memory access controller) selection in the case of data read/write), data size, data contents, address value, and stop timing in the case of instruction fetch are break conditions that can be set in this module. Since this LSI uses a Harvard architecture, instruction fetch on the CPU bus (C bus) is performed by issuing bus cycles on the instruction fetch bus (F bus), and data access on the C bus is performed by issuing bus cycles on the memory access bus (M bus). The internal bus (I bus) consists of the internal CPU bus, on which the CPU issues bus cycles, and the internal DMA bus, on which the direct memory access controller issues bus cycles. This module monitors the C bus and I bus.

8.1 Features

1. The following break comparison conditions can be set.
   Number of break channels: two channels (channels 0 and 1)
   User break can be requested as the independent condition on channels 0 and 1.
   — Address
     Comparison of the 32-bit address is maskable in 1-bit units.
     One of the four address buses (F address bus (FAB), M address bus (MAB), internal CPU address bus (ICAB), and internal DMA address bus (IDAB)) can be selected.
   — Data
     Comparison of the 32-bit data is maskable in 1-bit units.
     One of the three data buses (M data bus (MDB), internal CPU data bus (ICDB), and internal DMA data bus (IDDB)) can be selected.
   — Bus selection when I bus is selected
     Internal CPU bus or internal DMA bus
   — Bus cycle
     Instruction fetch (only when C bus is selected) or data access
   — Read/write
   — Operand size
     Byte, word, and longword
2. In an instruction fetch cycle, it can be selected whether the start of user break interrupt exception processing is set before or after an instruction is executed.
3. When a break condition is satisfied, a trigger signal is output from the $\overline{\text{UBCTRG}}$ pin.

chanhvinh.com

Figure 8.1 shows a block diagram.

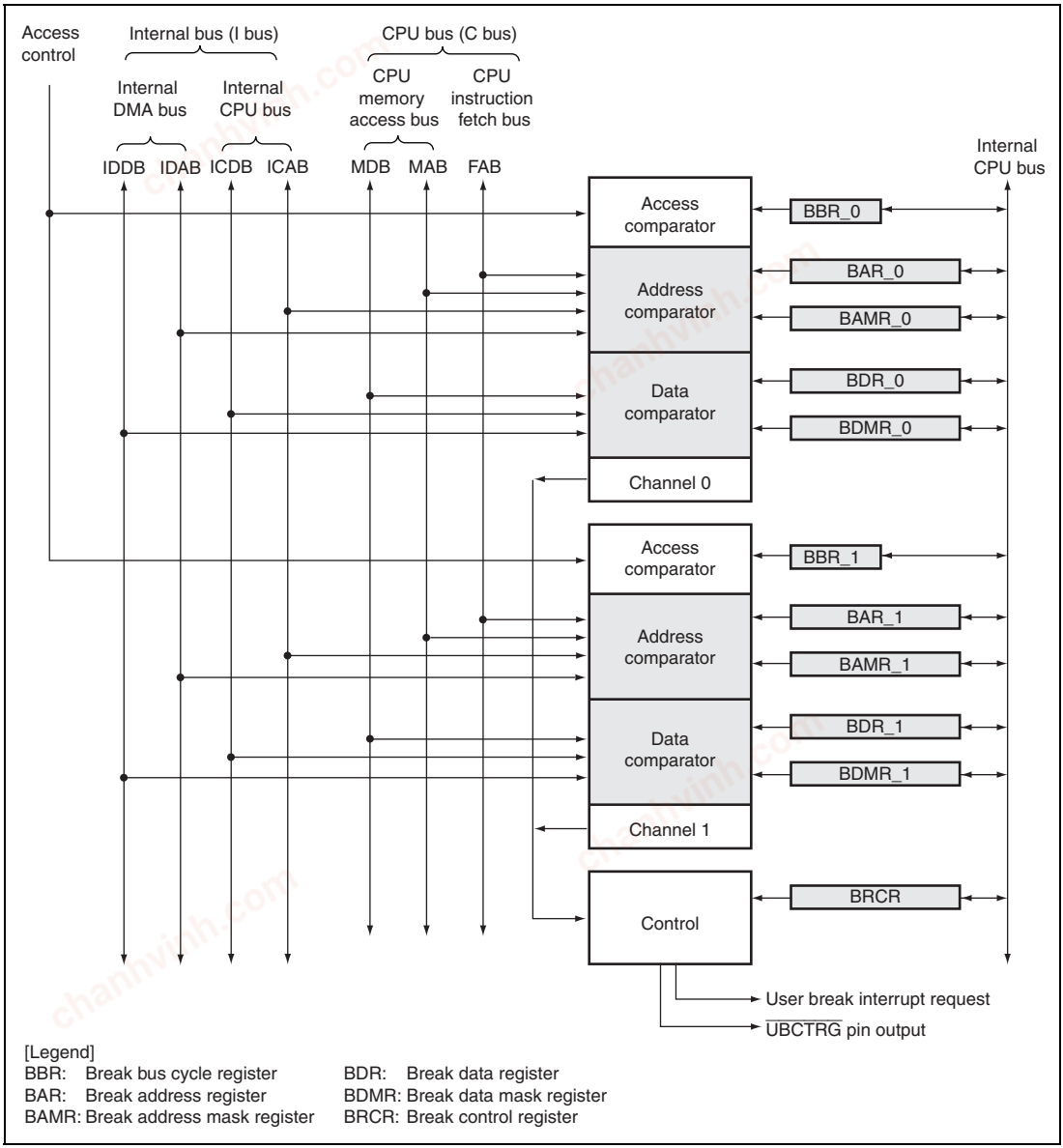

Figure 8.1 Block Diagram

chanhvinh.com

8.2 Input/Output Pin

Table 8.1 shows the pin configuration.

Table 8.1 Pin Configuration

Pin Name	Symbol	I/O	Function
User break trigger output	$\overline{\text{UBCTRG}}$	Output	Indicates that a setting condition is satisfied on either channel 0 or 1 of this module.

chanhvinh.com

8.3 Register Descriptions

Table 8.2 shows a register configuration. Five control registers for each channel and one common control register for channel 0 and channel 1 are available. A register for each channel is described as BAR_0 for the BAR register in channel 0.

Table 8.2 Register Configuration

Channel	Register Name	Abbreviation	R/W	Initial Value	Address	Access Size
0	Break address register_0	BAR_0	R/W	H'00000000	H'FFFC0400	32
	Break address mask register_0	BAMR_0	R/W	H'00000000	H'FFFC0404	32
	Break bus cycle register_0	BBR_0	R/W	H'0000	H'FFFC04A0	16
	Break data register_0	BDR_0	R/W	H'00000000	H'FFFC0408	32
	Break data mask register_0	BDMR_0	R/W	H'00000000	H'FFFC040C	32
1	Break address register_1	BAR_1	R/W	H'00000000	H'FFFC0410	32
	Break address mask register_1	BAMR_1	R/W	H'00000000	H'FFFC0414	32
	Break bus cycle register_1	BBR_1	R/W	H'0000	H'FFFC04B0	16
	Break data register_1	BDR_1	R/W	H'00000000	H'FFFC0418	32
	Break data mask register_1	BDMR_1	R/W	H'00000000	H'FFFC041C	32
Common	Break control register	BRCR	R/W	H'00000000	H'FFFC04C0	32

chanhvinh.com

8.3.1 Break Address Register (BAR)

BAR is a 32-bit readable/writable register. BAR specifies the address used as a break condition in each channel. The control bits CD[1:0] and CP[1:0] in the break bus cycle register (BBR) select one of the four address buses for a break condition.

Bit:	31	30	29	28	27	26	25	24	23	22	21	20	19	18	17	16
	BA31	BA30	BA29	BA28	BA27	BA26	BA25	BA24	BA23	BA22	BA21	BA20	BA19	BA18	BA17	BA16
Initial value:	0	0	0	0	0	0	0	0	0	0	0	0	0	0	0	0
R/W:	R/W	R/W	R/W	R/W	R/W	R/W	R/W	R/W	R/W	R/W	R/W	R/W	R/W	R/W	R/W	R/W

Bit:	15	14	13	12	11	10	9	8	7	6	5	4	3	2	1	0
	BA15	BA14	BA13	BA12	BA11	BA10	BA9	BA8	BA7	BA6	BA5	BA4	BA3	BA2	BA1	BA0
Initial value:	0	0	0	0	0	0	0	0	0	0	0	0	0	0	0	0
R/W:	R/W	R/W	R/W	R/W	R/W	R/W	R/W	R/W	R/W	R/W	R/W	R/W	R/W	R/W	R/W	R/W

Bit	Bit Name	Initial Value	R/W	Description
31 to 0	BA31 to BA0	All 0	R/W	Break Address Store an address on the CPU address bus (FAB or MAB) or internal address bus (ICAB or IDAB) specifying break conditions. When the C bus and instruction fetch cycle are selected by BBR, specify an FAB address in bits BA31 to BA0. When the C bus and data access cycle are selected by BBR, specify an MAB address in bits BA31 to BA0. When the internal CPU bus (I bus) is selected by BBR, specify an ICAB address in bits BA31 to BA0. When the internal DMA bus (I bus) is selected by BBR, specify an IDAB address in bits BA31 to BA0.

Note: When setting the instruction fetch cycle as a break condition, clear the LSB in BAR to 0.

chanhvinh.com

8.3.2 Break Address Mask Register (BAMR)

BAMR is a 32-bit readable/writable register. BAMR specifies bits masked in the break address bits specified by BAR.

Bit:	31	30	29	28	27	26	25	24	23	22	21	20	19	18	17	16
	BAM31	BAM30	BAM29	BAM28	BAM27	BAM26	BAM25	BAM24	BAM23	BAM22	BAM21	BAM20	BAM19	BAM18	BAM17	BAM16
Initial value:	0	0	0	0	0	0	0	0	0	0	0	0	0	0	0	0
R/W:	R/W	R/W	R/W	R/W	R/W	R/W	R/W	R/W	R/W	R/W	R/W	R/W	R/W	R/W	R/W	R/W

Bit:	15	14	13	12	11	10	9	8	7	6	5	4	3	2	1	0
	BAM15	BAM14	BAM13	BAM12	BAM11	BAM10	BAM9	BAM8	BAM7	BAM6	BAM5	BAM4	BAM3	BAM2	BAM1	BAM0
Initial value:	0	0	0	0	0	0	0	0	0	0	0	0	0	0	0	0
R/W:	R/W	R/W	R/W	R/W	R/W	R/W	R/W	R/W	R/W	R/W	R/W	R/W	R/W	R/W	R/W	R/W

Bit	Bit Name	Initial Value	R/W	Description
31 to 0	BAM31 to BAM0	All 0	R/W	Break Address Mask Specify bits masked in the break address bits specified by BAR (BA31 to BA0). 0: Break address bit BAn is included in the break condition 1: Break address bit BAn is masked and not included in the break condition Note: n = 31 to 0

chanhvinh.com

8.3.3 Break Data Register (BDR)

BDR is a 32-bit readable/writable register. The control bits CD[1:0] and CP[1:0] in the break bus cycle register (BBR) select one of the three data buses for a break condition.

Bit:	31	30	29	28	27	26	25	24	23	22	21	20	19	18	17	16
	BD31	BD30	BD29	BD28	BD27	BD26	BD25	BD24	BD23	BD22	BD21	BD20	BD19	BD18	BD17	BD16
Initial value:	0	0	0	0	0	0	0	0	0	0	0	0	0	0	0	0
R/W:	R/W	R/W	R/W	R/W	R/W	R/W	R/W	R/W	R/W	R/W	R/W	R/W	R/W	R/W	R/W	R/W

Bit:	15	14	13	12	11	10	9	8	7	6	5	4	3	2	1	0
	BD15	BD14	BD13	BD12	BD11	BD10	BD9	BD8	BD7	BD6	BD5	BD4	BD3	BD2	BD1	BD0
Initial value:	0	0	0	0	0	0	0	0	0	0	0	0	0	0	0	0
R/W:	R/W	R/W	R/W	R/W	R/W	R/W	R/W	R/W	R/W	R/W	R/W	R/W	R/W	R/W	R/W	R/W

Bit	Bit Name	Initial Value	R/W	Description
31 to 0	BD31 to BD0	All 0	R/W	Break Data Bits Store data which specifies a break condition. When the C bus is selected by BBR, specify the break data on MDB in bits BD31 to BD0. When the internal CPU bus (I bus) is selected by BBR, specify an ICDB address in bits BD31 to BD0. When the internal DMA bus (I bus) is selected by BBR, specify an IDDB address in bits BD31 to BD0.

Notes: 1. Set the operand size when specifying a value on a data bus as the break condition.
2. When the byte size is selected as a break condition, the same byte data must be set in bits 31 to 24, 23 to 16, 15 to 8, and 7 to 0 in BDR as the break data. Similarly, when the word size is selected, the same word data must be set in bits 31 to 16 and 15 to 0.

chanhvinh.com

8.3.4 Break Data Mask Register (BDMR)

BDMR is a 32-bit readable/writable register. BDMR specifies bits masked in the break data bits specified by BDR.

Bit:	31	30	29	28	27	26	25	24	23	22	21	20	19	18	17	16
	BDM31	BDM30	BDM29	BDM28	BDM27	BDM26	BDM25	BDM24	BDM23	BDM22	BDM21	BDM20	BDM19	BDM18	BDM17	BDM16
Initial value:	0	0	0	0	0	0	0	0	0	0	0	0	0	0	0	0
R/W:	R/W	R/W	R/W	R/W	R/W	R/W	R/W	R/W	R/W	R/W	R/W	R/W	R/W	R/W	R/W	R/W

Bit:	15	14	13	12	11	10	9	8	7	6	5	4	3	2	1	0
	BDM15	BDM14	BDM13	BDM12	BDM11	BDM10	BDM9	BDM8	BDM7	BDM6	BDM5	BDM4	BDM3	BDM2	BDM1	BDM0
Initial value:	0	0	0	0	0	0	0	0	0	0	0	0	0	0	0	0
R/W:	R/W	R/W	R/W	R/W	R/W	R/W	R/W	R/W	R/W	R/W	R/W	R/W	R/W	R/W	R/W	R/W

Bit	Bit Name	Initial Value	R/W	Description
31 to 0	BDM31 to BDM0	All 0	R/W	Break Data Mask Specify bits masked in the break data bits specified by BDR (BD31 to BD0). 0: Break data bit BDn is included in the break condition 1: Break data bit BDn is masked and not included in the break condition Note: n = 31 to 0

Notes: 1. Set the operand size when specifying a value on a data bus as the break condition.
2. When the byte size is selected as a break condition, the same byte data must be set in bits 31 to 24, 23 to 16, 15 to 8, and 7 to 0 in BDMR as the break mask data. Similarly, when the word size is selected, the same word data must be set in bits 31 to 16 and 15 to 0.

chanhvinh.com

8.3.5 Break Bus Cycle Register (BBR)

BBR is a 16-bit readable/writable register, which specifies (1) disabling or enabling of user break interrupt requests, (2) including or excluding of the data bus value, (3) internal CPU bus or internal DMA bus, (4) C bus cycle or I bus cycle, (5) instruction fetch or data access, (6) read or write, and (7) operand size as the break conditions.

Bit:	15	14	13	12	11	10	9	8	7	6	5	4	3	2	1	0
	-	-	UBID	DBE	-	-	CP[1:0]		CD[1:0]		ID[1:0]		RW[1:0]		SZ[1:0]	
Initial value:	0	0	0	0	0	0	0	0	0	0	0	0	0	0	0	0
R/W:	R	R	R/W	R/W	R	R	R/W	R/W	R/W	R/W	R/W	R/W	R/W	R/W	R/W	R/W

Bit	Bit Name	Initial Value	R/W	Description
15, 14	—	All 0	R	Reserved These bits are always read as 0. The write value should always be 0.
13	UBID	0	R/W	User Break Interrupt Disable Disables or enables user break interrupt requests when a break condition is satisfied. 0: User break interrupt requests enabled 1: User break interrupt requests disabled
12	DBE	0	R/W	Data Break Enable Selects whether the data bus condition is included in the break conditions. 0: Data bus condition is not included in break conditions 1: Data bus condition is included in break conditions
11, 10	—	All 0	R	Reserved These bits are always read as 0. The write value should always be 0.

chanhvinh.com

Bit	Bit Name	Initial Value	R/W	Description
9, 8	CP[1:0]	00	R/W	I-Bus Bus Select Select the bus when the bus cycle of the break condition is the I bus cycle. However, when the C bus cycle is selected, this bit is invalidated (only the CPU cycle). 00: Condition comparison is not performed 01: Break condition is the internal CPU bus 10: Break condition is the internal DMA bus 11: Break condition is the internal CPU bus
7, 6	CD[1:0]	00	R/W	C Bus Cycle/I Bus Cycle Select Select the C bus cycle or I bus cycle as the bus cycle of the break condition. 00: Condition comparison is not performed 01: Break condition is the C bus (F bus or M bus) cycle 10: Break condition is the I bus cycle 11: Break condition is the C bus (F bus or M bus) cycle
5, 4	ID[1:0]	00	R/W	Instruction Fetch/Data Access Select Select the instruction fetch cycle or data access cycle as the bus cycle of the break condition. If the instruction fetch cycle is selected, select the C bus cycle. 00: Condition comparison is not performed 01: Break condition is the instruction fetch cycle 10: Break condition is the data access cycle 11: Break condition is the instruction fetch cycle or data access cycle
3, 2	RW[1:0]	00	R/W	Read/Write Select Select the read cycle or write cycle as the bus cycle of the break condition. 00: Condition comparison is not performed 01: Break condition is the read cycle 10: Break condition is the write cycle 11: Break condition is the read cycle or write cycle

chanhvinh.com

Bit	Bit Name	Initial Value	R/W	Description
1, 0	SZ[1:0]	00	R/W	Operand Size Select Select the operand size of the bus cycle for the break condition. 00: Break condition does not include operand size 01: Break condition is byte access 10: Break condition is word access 11: Break condition is longword access

8.3.6 Break Control Register (BRCR)

BRCR sets the following conditions:

1. Specifies whether a start of user break interrupt exception processing by instruction fetch cycle is set before or after instruction execution.
2. Specifies the pulse width of the $\overline{\text{UBCTRG}}$ output when a break condition is satisfied.
3. Specifies whether a trigger signal is output to the $\overline{\text{UBCTRG}}$ pin when a break condition is satisfied.

BRCR is a 32-bit readable/writable register that has break condition match flags and bits for setting other break conditions. For the condition match flags of bits 15 to 12, writing 1 is invalid (previous values are retained) and writing 0 is only possible. To clear the flag, write 0 to the flag bit to be cleared and 1 to all other flag bits.

Bit:	31	30	29	28	27	26	25	24	23	22	21	20	19	18	17	16
	-	-	-	-	-	-	-	-	-	-	-	-	UTOD1	UTOD0	CKS[1:0]	
Initial value:	0	0	0	0	0	0	0	0	0	0	0	0	0	0	0	0
R/W:	R	R	R	R	R	R	R	R	R	R	R	R	R/W	R/W	R/W	R/W

Bit:	15	14	13	12	11	10	9	8	7	6	5	4	3	2	1	0
	SCMFC 0	SCMFC 1	SCMFD 0	SCMFD 1	-	-	-	-	-	PCB1	PCB0	-	-	-	-	-
Initial value:	0	0	0	0	0	0	0	0	0	0	0	0	0	0	0	0
R/W:	R/W	R/W	R/W	R/W	R	R	R	R	R	R/W	R/W	R	R	R	R	R

Bit	Bit Name	Initial Value	R/W	Description
31 to 20	—	All 0	R	Reserved These bits are always read as 0. The write value should always be 0.

chanhvinh.com

Bit	Bit Name	Initial Value	R/W	Description
19	UTOD1	0	R/W	$\overline{\text{UBCTRG}}$ Output Disable 1 Specifies whether a trigger signal is output to the $\overline{\text{UBCTRG}}$ pin when a break condition for channel 1 is satisfied. 0: Outputs a trigger signal to the $\overline{\text{UBCTRG}}$ pin when a break condition for channel 1 is satisfied 1: Does not output a trigger signal to the $\overline{\text{UBCTRG}}$ pin when a break condition for channel 1 is satisfied
18	UTOD0	0	R/W	$\overline{\text{UBCTRG}}$ Output Disable 0 Specifies whether a trigger signal is output to the $\overline{\text{UBCTRG}}$ pin when a break condition for channel 0 is satisfied. 0: Outputs a trigger signal to the $\overline{\text{UBCTRG}}$ pin when a break condition for channel 0 is satisfied 1: Does not output a trigger signal to the $\overline{\text{UBCTRG}}$ pin when a break condition for channel 0 is satisfied
17, 16	CKS[1:0]	00	R/W	Clock Select Specifies the pulse width output to the $\overline{\text{UBCTRG}}$ pin when a break condition is satisfied. 00: Pulse width of $\overline{\text{UBCTRG}}$ is one cycle of peripheral clock 1. 01: Pulse width of $\overline{\text{UBCTRG}}$ is two cycles of peripheral clock 1. 10: Pulse width of $\overline{\text{UBCTRG}}$ is four cycles of peripheral clock 1. 11: Pulse width of $\overline{\text{UBCTRG}}$ is eight cycles of peripheral clock 1.
15	SCMFC0	0	R/W	C Bus Cycle Condition Match Flag 0 When the C bus cycle condition in the break conditions set for channel 0 is satisfied, this flag is set to 1. In order to clear this flag, write 0 to this bit. 0: The C bus cycle condition for channel 0 does not match 1: The C bus cycle condition for channel 0 matches

chanhvinh.com

Bit	Bit Name	Initial Value	R/W	Description
14	SCMFC1	0	R/W	C Bus Cycle Condition Match Flag 1 When the C bus cycle condition in the break conditions set for channel 1 is satisfied, this flag is set to 1. In order to clear this flag, write 0 to this bit. 0: The C bus cycle condition for channel 1 does not match 1: The C bus cycle condition for channel 1 matches
13	SCMFD0	0	R/W	I Bus Cycle Condition Match Flag 0 When the I bus cycle condition in the break conditions set for channel 0 is satisfied, this flag is set to 1. In order to clear this flag, write 0 to this bit. 0: The I bus cycle condition for channel 0 does not match 1: The I bus cycle condition for channel 0 matches
12	SCMFD1	0	R/W	I Bus Cycle Condition Match Flag 1 When the I bus cycle condition in the break conditions set for channel 1 is satisfied, this flag is set to 1. In order to clear this flag, write 0 to this bit. 0: The I bus cycle condition for channel 1 does not match 1: The I bus cycle condition for channel 1 matches
11 to 7	—	All 0	R	Reserved These bits are always read as 0. The write value should always be 0.
6	PCB1	0	R/W	PC Break Select 1 Selects the break timing of the instruction fetch cycle for channel 1 as before or after instruction execution. 0: PC break of channel 1 is generated before instruction execution 1: PC break of channel 1 is generated after instruction execution
5	PCB0	0	R/W	PC Break Select 0 Selects the break timing of the instruction fetch cycle for channel 0 as before or after instruction execution. 0: PC break of channel 0 is generated before instruction execution 1: PC break of channel 0 is generated after instruction execution

chanhvinh.com

Bit	Bit Name	Initial Value	R/W	Description
4 to 0	—	All 0	R	Reserved These bits are always read as 0. The write value should always be 0.

chanhvinh.com

8.4 Operation

8.4.1 Flow of the User Break Operation

The flow from setting of break conditions to user break interrupt exception handling is described below:

1. The break address is set in a break address register (BAR). The masked address bits are set in a break address mask register (BAMR). The break data is set in the break data register (BDR). The masked data bits are set in the break data mask register (BDMR). The bus break conditions are set in the break bus cycle register (BBR). Three control bit groups of BBR (C bus cycle/I bus cycle select, instruction fetch/data access select, and read/write select) are each set. No user break will be generated if even one of these groups is set to 00. The relevant break control conditions are set in the bits of the break control register (BRCR). Make sure to set all registers related to breaks before setting BBR, and branch after reading from the last written register. The newly written register values become valid from the instruction at the branch destination.
2. In the case where the break conditions are satisfied and the user break interrupt request is enabled, this module sends a user break interrupt request to the interrupt controller sets the C bus condition match flag (SCMFC) or I bus condition match flag (SCMFD) for the appropriate channel, and outputs a pulse to the $\overline{\text{UBCTRG}}$ pin with the width set by the CKS[1:0] bits. Setting the UBID bit in BBR to 1 enables external monitoring of the trigger output without requesting user break interrupts.
3. On receiving a user break interrupt request signal, the interrupt controller determines its priority. Since the user break interrupt has a priority level of 15, it is accepted when the priority level set in the interrupt mask level bits (I3 to I0) of the status register (SR) is 14 or lower. If the I3 to I0 bits are set to a priority level of 15, the user break interrupt is not accepted, but the conditions are checked, and condition match flags are set if the conditions match. For details on ascertaining the priority, see section 7, Interrupt Controller.
4. Condition match flags (SCMFC and SCMFD) can be used to check which condition has been satisfied. Clear the condition match flags during the user break interrupt exception processing routine. The interrupt occurs again if this operation is not performed.
5. There is a chance that the break set in channel 0 and the break set in channel 1 occur around the same time. In this case, there will be only one user break request to the interrupt controller but these two break channel match flags may both be set.
6. When selecting the I bus as the break condition, note as follows:
   — Whether or not an access issued on the C bus by the CPU is issued on the internal CPU bus depends on the cache settings. Regarding the I bus operation under cache conditions, see table 9.8 in section 9, Cache.

chanhvinh.com

— When a break condition is specified for the I bus, only the data access cycle is monitored. The instruction fetch cycle (including the cache renewal cycle) is not monitored.
— Only data access cycles are issued for the internal DMA bus cycles.
— If a break condition is specified for the I bus, even when the condition matches in an internal CPU bus cycle resulting from an instruction executed by the CPU, at which instruction the user break interrupt request is to be accepted cannot be clearly defined.

8.4.2 Break on Instruction Fetch Cycle

1. When C bus/instruction fetch/read/word or longword is set in the break bus cycle register (BBR), the break condition is the FAB bus instruction fetch cycle. Whether a start of user break interrupt exception processing is set before or after the execution of the instruction can then be selected with the PCB0 or PCB1 bit of the break control register (BRCR) for the appropriate channel. If an instruction fetch cycle is set as a break condition, clear BA0 bit in the break address register (BAR) to 0. A break cannot be generated as long as this bit is set to 1.
2. A break for instruction fetch which is set as a break before instruction execution occurs when it is confirmed that the instruction has been fetched and will be executed. This means a break does not occur for instructions fetched by overrun (instructions fetched at a branch or during an interrupt transition, but not to be executed). When this kind of break is set for the delay slot of a delayed branch instruction, the user break interrupt request is not received until the execution of the first instruction at the branch destination.

   Note: If a branch does not occur at a delayed branch instruction, the subsequent instruction is not recognized as a delay slot.

3. When setting a break condition for break after instruction execution, the instruction set with the break condition is executed and then the break is generated prior to execution of the next instruction. As with pre-execution breaks, a break does not occur with overrun fetch instructions. When this kind of break is set for a delayed branch instruction and its delay slot, the user break interrupt request is not received until the first instruction at the branch destination.
4. When an instruction fetch cycle is set, the break data register (BDR) is ignored. Therefore, break data cannot be set for the break of the instruction fetch cycle.
5. If the I bus is set for a break of an instruction fetch cycle, the setting is invalidated.

chanhvinh.com

8.4.3 Break on Data Access Cycle

1. If the C bus is specified as a break condition for data access break, condition comparison is performed for the addresses (and data) accessed by the executed instructions, and a break occurs if the condition is satisfied. If the I bus is specified as a break condition, condition comparison is performed for the addresses (and data) of the data access cycles on the bus specified by the I bus select bits, and a break occurs if the condition is satisfied. For details on the CPU bus cycles issued on the internal CPU bus, see 6 in section 8.4.1, Flow of the User Break Operation.
2. The relationship between the data access cycle address and the comparison condition for each operand size is listed in table 8.3.

Table 8.3 Data Access Cycle Addresses and Operand Size Comparison Conditions

Access Size	Address Compared
Longword	Compares break address register bits 31 to 2 to address bus bits 31 to 2
Word	Compares break address register bits 31 to 1 to address bus bits 31 to 1
Byte	Compares break address register bits 31 to 0 to address bus bits 31 to 0

This means that when address H'00001003 is set in the break address register (BAR), for example, the bus cycle in which the break condition is satisfied is as follows (where other conditions are met).

Longword access at H'00001000

Word access at H'00001002

Byte access at H'00001003

3. When the data value is included in the break conditions:

   When the data value is included in the break conditions, either longword, word, or byte is specified as the operand size in the break bus cycle register (BBR). When data values are included in break conditions, a break is generated when the address conditions and data conditions both match. To specify byte data for this case, set the same data in the four bytes at bits 31 to 24, 23 to 16, 15 to 8, and 7 to 0 of the break data register (BDR) and break data mask register (BDMR). To specify word data for this case, set the same data in the two words at bits 31 to 16 and 15 to 0.
4. Access by a PREF instruction is handled as read access in longword units without access data. Therefore, if including the value of the data bus when a PREF instruction is specified as a break condition, a break will not occur.
5. If the data access cycle is selected, the instruction at which the break will occur cannot be determined.

chanhvinh.com

8.4.4 Value of Saved Program Counter

When a user break interrupt request is received, the address of the instruction from where execution is to be resumed is saved to the stack, and the exception handling state is entered. If the C bus (FAB)/instruction fetch cycle is specified as a break condition, the instruction at which the break should occur can be uniquely determined. If the C bus/data access cycle or I bus/data access cycle is specified as a break condition, the instruction at which the break should occur cannot be uniquely determined.

1. When C bus (FAB)/instruction fetch (before instruction execution) is specified as a break condition:

   The address of the instruction that matched the break condition is saved to the stack. The instruction that matched the condition is not executed, and the break occurs before it. However when a delay slot instruction matches the condition, the instruction is executed, and the branch destination address is saved to the stack.
2. When C bus (FAB)/instruction fetch (after instruction execution) is specified as a break condition:

   The address of the instruction following the instruction that matched the break condition is saved to the stack. The instruction that matches the condition is executed, and the break occurs before the next instruction is executed. However when a delayed branch instruction or delay slot matches the condition, the instruction is executed, and the branch destination address is saved to the stack.
3. When C bus/data access cycle or I bus/data access cycle is specified as a break condition:

   The address after executing several instructions of the instruction that matched the break condition is saved to the stack.

chanhvinh.com

8.4.5 Usage Examples

(1) Break Condition Specified for C Bus Instruction Fetch Cycle

(Example 1-1)

- Register specifications

  BAR_0 = H'00000404, BAMR_0 = H'00000000, BBR_0 = H'0054, BAR_1 = H'00008010, BAMR_1 = H'00000006, BBR_1 = H'0054, BDR_1 = H'00000000, BDMR_1 = H'00000000, BRCR = H'00000020

  <Channel 0>

  Address: H'00000404, Address mask: H'00000000

  Bus cycle: C bus/instruction fetch (after instruction execution)/read (operand size is not included in the condition)

  <Channel 1>

  Address: H'00008010, Address mask: H'00000006

  Data: H'00000000, Data mask: H'00000000

  Bus cycle: C bus/instruction fetch (before instruction execution)/read (operand size is not included in the condition)

  A user break occurs after an instruction of address H'00000404 is executed or before instructions of addresses H'00008010 to H'00008016 are executed.

(Example 1-2)

- Register specifications

  BAR_0 = H'00027128, BAMR_0 = H'00000000, BBR_0 = H'005A, BAR_1= H'00031415, BAMR_1 = H'00000000, BBR_1 = H'0054, BDR_1 = H'00000000, BDMR_1 = H'00000000, BRCR = H'00000000

  <Channel 0>

  Address: H'00027128, Address mask: H'00000000

  Bus cycle: C bus/instruction fetch (before instruction execution)/write/word

  <Channel 1>

  Address: H'00031415, Address mask: H'00000000

  Data: H'00000000, Data mask: H'00000000

  Bus cycle: C bus/instruction fetch (before instruction execution)/read (operand size is not included in the condition)

  On channel 0, a user break does not occur since instruction fetch is not a write cycle. On channel 1, a user break does not occur since instruction fetch is performed for an even address.

chanhvinh.com

(Example 1-3)

- Register specifications

  BAR_0 = H'00008404, BAMR_0 = H'00000FFF, BBR_0 = H'0054, BAR_1= H'00008010, BAMR_1 = H'00000006, BBR_1 = H'0054, BDR_1 = H'00000000, BDMR_1 = H'00000000, BRCR = H'00000020

  <Channel 0>

  Address: H'00008404, Address mask: H'00000FFF

  Bus cycle: C bus/instruction fetch (after instruction execution)/read (operand size is not included in the condition)

  <Channel 1>

  Address: H'00008010, Address mask: H'00000006

  Data: H'00000000, Data mask: H'00000000

  Bus cycle: C bus/instruction fetch (before instruction execution)/read (operand size is not included in the condition)

  A user break occurs after an instruction with addresses H'00008000 to H'00008FFE is executed or before an instruction with addresses H'00008010 to H'00008016 are executed.

(2) Break Condition Specified for C Bus Data Access Cycle

(Example 2-1)

- Register specifications

  BAR_0 = H'00123456, BAMR_0 = H'00000000, BBR_0 = H'0064, BAR_1= H'000ABCDE, BAMR_1 = H'000000FF, BBR_1 = H'106A, BDR_1 = H'A512A512, BDMR_1 = H'00000000, BRCR = H'00000000

  <Channel 0>

  Address: H'00123456, Address mask: H'00000000

  Bus cycle: C bus/data access/read (operand size is not included in the condition)

  <Channel 1>

  Address: H'000ABCDE, Address mask: H'000000FF

  Data: H'0000A512, Data mask: H'00000000

  Bus cycle: C bus/data access/write/word

  On channel 0, a user break occurs with longword read from address H'00123456, word read from address H'00123456, or byte read from address H'00123456. On channel 1, a user break occurs when word H'A512 is written in addresses H'000ABC00 to H'000ABCFE.

chanhvinh.com

(3) Break Condition Specified for I Bus Data Access Cycle

(Example 3-1)

- Register specifications

  BAR_0 = H'00314156, BAMR_0 = H'00000000, BBR_0 = H'0194, BAR_1= H'00055555, BAMR_1 = H'00000000, BBR_1 = H'12A9, BDR_1 = H'78787878, BDMR_1 = H'0F0F0F0F, BRCR = H'00000000

  <Channel 0>

  Address: H'00314156, Address mask: H'00000000

  Bus cycle: Internal CPU bus/instruction fetch/read (operand size is not included in the condition)

  <Channel 1>

  Address: H'00055555, Address mask: H'00000000

  Data: H'00000078, Data mask: H'0000000F

  Bus cycle: Internal DMA bus/data access/write/byte

  On channel 0, the setting of the internal CPU bus/instruction fetch is ignored.

  On channel 1, a user break occurs when the direct memory access controller writes byte data H'7x in address H'00055555 on the internal DMA bus (access via the internal CPU bus does not generate a user break).

chanhvinh.com

8.5 Usage Notes

1. The CPU can read from or write to this module registers via the internal CPU bus. Accordingly, during the period from executing an instruction to rewrite this module register till the new value is actually rewritten, the desired break may not occur. In order to know the timing when this module register is changed, read from the last written register. Instructions after then are valid for the newly written register value.
2. This module cannot monitor the C bus, internal CPU, and internal DMA bus cycles in the same channel.
3. When a user break interrupt request and another exception source occur at the same instruction, which has higher priority is determined according to the priority levels defined in table 6.1 in section 6, Exception Handling. If an exception source with higher priority occurs, the user break interrupt request is not received.
4. Note the following when a break occurs in a delay slot.

   If a pre-execution break is set at a delay slot instruction, the user break interrupt request is not received immediately before execution of the branch destination.
5. User breaks are disabled during module standby mode. Do not read from or write to this module registers during module standby mode; the values are not guaranteed.
6. Do not set an address within an interrupt exception handling routine whose interrupt priority level is at least 15 (including user break interrupts) as a break address.
7. Do not set break after instruction execution for the SLEEP instruction or for the delayed branch instruction where the SLEEP instruction is placed at its delay slot.
8. When setting a break for a 32-bit instruction, set the address where the upper 16 bits are placed. If the address of the lower 16 bits is set and a break before instruction execution is set as a break condition, the break is handled as a break after instruction execution.
9. Do not set a user break before instruction execution for the instruction following the DIVU or DIVS instruction. If a user break before instruction execution is set for the instruction following the DIVU or DIVS instruction and an exception or interrupt occurs during execution of the DIVU or DIVS instruction, a user break occurs before instruction execution even though execution of the DIVU or DIVS instruction is halted.

chanhvinh.com

Section 9 Cache

9.1 Features

- Capacity
  Instruction cache: 8 Kbytes
  Operand cache: 8 Kbytes
- Structure: Instructions/data separated, 4-way set associative
- Way lock function (only for operand cache): Way 2 and way 3 are lockable
- Line size: 16 bytes
- Number of entries: 128 entries/way
- Write system: Write-back/write-through selectable
- Replacement method: Least-recently-used (LRU) algorithm

9.1.1 Cache Structure

The cache separates data and instructions and uses a 4-way set associative system. It is composed of four ways (banks), each of which is divided into an address section and a data section.

In each way, each of the address and data sections is divided into 128 entries. The data section of the entry is called a line. Each line consists of 16 bytes (4 bytes × 4). The data capacity per way is 2 Kbytes (16 bytes × 128 entries), with a total of 8 Kbytes in the cache as a whole (4 ways).

Figure 9.1 shows the operand cache structure. The instruction cache structure is the same as the operand cache structure except for not having the U bit.

chanhvinh.com

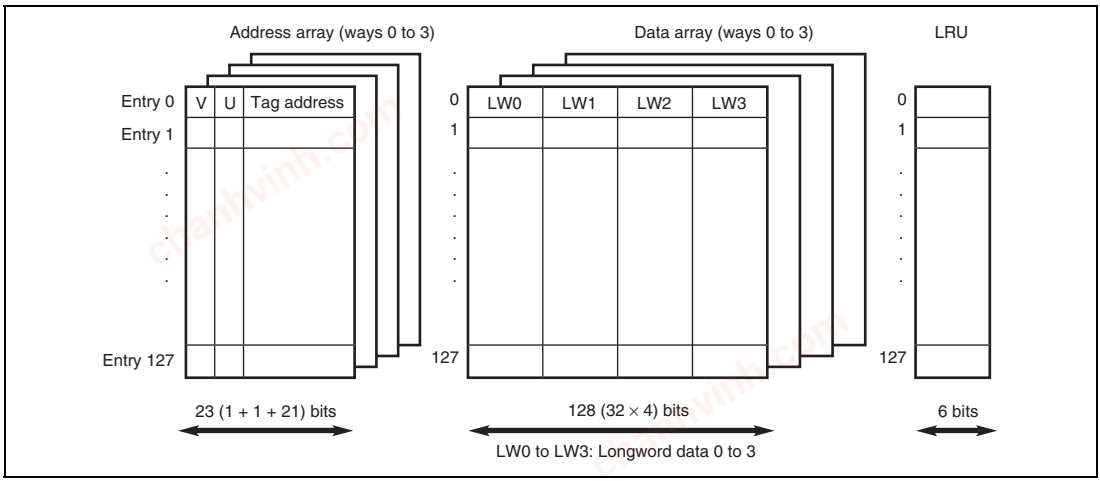

Figure 9.1 Operand Cache Structure

(1) Address Array

The V bit indicates whether the entry data is valid. When the V bit is 1, data is valid; when 0, data is not valid.

The U bit (only for operand cache) indicates whether the entry has been written to in write-back mode. When the U bit is 1, the entry has been written to; when 0, it has not.

The tag address holds the physical address used in the access to external memory or large-capacity on-chip RAM. It consists of 21 bits (address bits 31 to 11) used for comparison during cache searches. In this LSI, the addresses of the cache-enabled space are H'00000000 to H'1FFFFFFF (see section 10, Bus State Controller), and therefore the upper three bits of the tag address are cleared to 0.

The V and U bits are initialized to 0 by a power-on reset but not initialized by a manual reset or in software standby mode. The tag address is not initialized by a power-on reset or manual reset or in software standby mode.

(2) Data Array

Holds a 16-byte instruction or data. Entries are registered in the cache in line units (16 bytes).

The data array is not initialized by a power-on reset or manual reset or in software standby mode.

chanhvinh.com

(3) LRU

With the 4-way set associative system, up to four instructions or data with the same entry address can be registered in the cache. When an entry is registered, LRU shows which of the four ways it is recorded in. There are six LRU bits, controlled by hardware. A least-recently-used (LRU) algorithm is used to select the way that has been least recently accessed.

Six LRU bits indicate the way to be replaced in case of a cache miss. The relationship between LRU and way replacement is shown in table 9.1 when the cache lock function (only for operand cache) is not used (concerning the case where the cache lock function is used, see section 9.2.2, Cache Control Register 2 (CCR2)). If a bit pattern other than those listed in table 9.1 is set in the LRU bits by software, the cache will not function correctly. When modifying the LRU bits by software, set one of the patterns listed in table 9.1.

The LRU bits are initialized to B'000000 by a power-on reset but not initialized by a manual reset or in software standby mode.

Table 9.1 LRU and Way Replacement (Cache Lock Function Not Used)

LRU (Bits 5 to 0)	Way to be Replaced
000000, 000100, 010100, 100000, 110000, 110100	3
000001, 000011, 001011, 100001, 101001, 101011	2
000110, 000111, 001111, 010110, 011110, 011111	1
111000, 111001, 111011, 111100, 111110, 111111	0

chanhvinh.com

9.2 Register Descriptions

Table 9.2 shows the register configuration of the cache.

Table 9.2 Register Configuration

Register Name	Abbreviation	R/W	Initial Value	Address	Access Size
Cache control register 1	CCR1	R/W	H'00000000	H'FFFC1000	32
Cache control register 2	CCR2	R/W	H'00000000	H'FFFC1004	32

9.2.1 Cache Control Register 1 (CCR1)

The instruction cache is enabled or disabled using the ICE bit. The ICF bit controls disabling of all instruction cache entries. The operand cache is enabled or disabled using the OCE bit. The OCF bit controls disabling of all operand cache entries. The WT bit selects either write-through mode or write-back mode for operand cache.

Programs that change the contents of CCR1 should be placed in a cache-disabled space, and a cache-enabled space should be accessed after reading the contents of CCR1.

Bit:	31	30	29	28	27	26	25	24	23	22	21	20	19	18	17	16
	-	-	-	-	-	-	-	-	-	-	-	-	-	-	-	-
Initial value:	0	0	0	0	0	0	0	0	0	0	0	0	0	0	0	0
R/W:	R	R	R	R	R	R	R	R	R	R	R	R	R	R	R	R

Bit:	15	14	13	12	11	10	9	8	7	6	5	4	3	2	1	0
	-	-	-	-	ICF	-	-	ICE	-	-	-	-	OCF	-	WT	OCE
Initial value:	0	0	0	0	0	0	0	0	0	0	0	0	0	0	0	0
R/W:	R	R	R	R	R/W	R	R	R/W	R	R	R	R	R/W	R	R/W	R/W

chanhvinh.com

Bit	Bit Name	Initial Value	R/W	Description
31 to 12	—	All 0	R	Reserved These bits are always read as 0. The write value should always be 0.
11	ICF	0	R/W	Instruction Cache Flush Writing 1 flushes all instruction cache entries (clears the V and LRU bits of all instruction cache entries to 0). Always reads 0. Write-back to the external memory or the large-capacity on-chip RAM is not performed when the instruction cache is flushed.
10, 9	—	All 0	R	Reserved These bits are always read as 0. The write value should always be 0.
8	ICE	0	R/W	Instruction Cache Enable Indicates whether the instruction cache function is enabled/disabled. 0: Instruction cache disable 1: Instruction cache enable
7 to 4	—	All 0	R	Reserved These bits are always read as 0. The write value should always be 0.
3	OCF	0	R/W	Operand Cache Flush Writing 1 flushes all operand cache entries (clears the V, U, and LRU bits of all operand cache entries to 0). Always reads 0. Write-back to the external memory or the large-capacity on-chip RAM is not performed when the operand cache is flushed.
2	—	0	R	Reserved This bit is always read as 0. The write value should always be 0.
1	WT	0	R/W	Write Through Selects write-back mode or write-through mode. 0: Write-back mode 1: Write-through mode
0	OCE	0	R/W	Operand Cache Enable Indicates whether the operand cache function is enabled/disabled. 0: Operand cache disable 1: Operand cache enable

chanhvinh.com

9.2.2 Cache Control Register 2 (CCR2)

CCR2 is used to enable or disable the cache locking function for operand cache and is valid in cache locking mode only. In cache locking mode, the lock enable bit (the LE bit) in CCR2 is set to 1. In non-cache-locking mode, the cache locking function is invalid.

When a cache miss occurs in cache locking mode by executing the prefetch instruction (PREF @Rn), the line of data pointed to by Rn is loaded into the cache according to bits 9 and 8 (the W3LOAD and W3LOCK bits) and bits 1 and 0 (the W2LOAD and W2LOCK bits) in CCR2. The relationship between the setting of each bit and a way, to be replaced when the prefetch instruction is executed, are listed in table 9.3. On the other hand, when the prefetch instruction is executed and a cache hit occurs, new data is not fetched and the entry which is already enabled is held. For example, when the prefetch instruction is executed with W3LOAD = 1 and W3LOCK = 1 specified in cache locking mode while one-line data already exists in way 0 which is specified by Rn, a cache hit occurs and data is not fetched to way 3.

In the cache access other than the prefetch instruction in cache locking mode, ways to be replaced by bits W3LOCK and W2LOCK are restricted. The relationship between the setting of each bit in CCR2 and ways to be replaced are listed in table 9.4.

Programs that change the contents of CCR2 should be placed in a cache-disabled space, and a cache-enabled space should be accessed after reading the contents of CCR2.

Bit:	31	30	29	28	27	26	25	24	23	22	21	20	19	18	17	16
	-	-	-	-	-	-	-	-	-	-	-	-	-	-	-	LE
Initial value:	0	0	0	0	0	0	0	0	0	0	0	0	0	0	0	0
R/W:	R	R	R	R	R	R	R	R	R	R	R	R	R	R	R	R/W

Bit:	15	14	13	12	11	10	9	8	7	6	5	4	3	2	1	0
	-	-	-	-	-	-	W3 LOAD*	W3 LOCK	-	-	-	-	-	-	W2 LOAD*	W2 LOCK
Initial value:	0	0	0	0	0	0	0	0	0	0	0	0	0	0	0	0
R/W:	R	R	R	R	R	R	R/W	R/W	R	R	R	R	R	R	R/W	R/W

Note: * The W3LOAD and W2LOAD bits should not be set to 1 at the same time.

chanhvinh.com

Bit	Bit Name	Initial Value	R/W	Description
31 to 17	—	All 0	R	Reserved These bits are always read as 0. The write value should always be 0.
16	LE	0	R/W	Lock Enable Controls the cache locking function. 0: Not cache locking mode 1: Cache locking mode
15 to 10	—	All 0	R	Reserved These bits are always read as 0. The write value should always be 0.
9	W3LOAD*	0	R/W	Way 3 Load
8	W3LOCK	0	R/W	Way 3 Lock When a cache miss occurs by the prefetch instruction while W3LOAD = 1 and W3LOCK = 1 in cache locking mode, the data is always loaded into way 3. Under any other condition, the cache miss data is loaded into the way to which LRU points.
7 to 2	—	All 0	R	Reserved These bits are always read as 0. The write value should always be 0.
1	W2LOAD*	0	R/W	Way 2 Load
0	W2LOCK	0	R/W	Way 2 Lock When a cache miss occurs by the prefetch instruction while W2LOAD = 1 and W2LOCK =1 in cache locking mode, the data is always loaded into way 2. Under any other condition, the cache miss data is loaded into the way to which LRU points.

Note: * The W3LOAD and W2LOAD bits should not be set to 1 at the same time.

chanhvinh.com

Table 9.3 Way to be Replaced when a Cache Miss Occurs in PREF Instruction

LE	W3LOAD*	W3LOCK	W2LOAD*	W2LOCK	Way to be Replaced
0	x	x	x	x	Decided by LRU (table 9.1)
1	x	0	x	0	Decided by LRU (table 9.1)
1	x	0	0	1	Decided by LRU (table 9.5)
1	0	1	x	0	Decided by LRU (table 9.6)
1	0	1	0	1	Decided by LRU (table 9.7)
1	0	x	1	1	Way 2
1	1	1	0	x	Way 3

[Legend]

x: Don't care

Note: * The W3LOAD and W2LOAD bits should not be set to 1 at the same time.

Table 9.4 Way to be Replaced when a Cache Miss Occurs in Other than PREF Instruction

LE	W3LOAD*	W3LOCK	W2LOAD*	W2LOCK	Way to be Replaced
0	x	x	x	x	Decided by LRU (table 9.1)
1	x	0	x	0	Decided by LRU (table 9.1)
1	x	0	x	1	Decided by LRU (table 9.5)
1	x	1	x	0	Decided by LRU (table 9.6)
1	x	1	x	1	Decided by LRU (table 9.7)

[Legend]

x: Don't care

Note: * The W3LOAD and W2LOAD bits should not be set to 1 at the same time.

Table 9.5 LRU and Way Replacement (when W2LOCK = 1 and W3LOCK = 0)

LRU (Bits 5 to 0)	Way to be Replaced
000000, 000001, 000100, 010100, 100000, 100001, 110000, 110100	3
000011, 000110, 000111, 001011, 001111, 010110, 011110, 011111	1
101001, 101011, 111000, 111001, 111011, 111100, 111110, 111111	0

chanhvinh.com

Table 9.6 LRU and Way Replacement (when W2LOCK = 0 and W3LOCK = 1)

LRU (Bits 5 to 0)	Way to be Replaced
000000, 000001, 000011, 001011, 100000, 100001, 101001, 101011	2
000100, 000110, 000111, 001111, 010100, 010110, 011110, 011111	1
110000, 110100, 111000, 111001, 111011, 111100, 111110, 111111	0

Table 9.7 LRU and Way Replacement (when W2LOCK = 1 and W3LOCK = 1)

LRU (Bits 5 to 0)	Way to be Replaced
000000, 000001, 000011, 000100, 000110, 000111, 001011, 001111, 010100, 010110, 011110, 011111	1
100000, 100001, 101001, 101011, 110000, 110100, 111000, 111001, 111011, 111100, 111110, 111111	0

chanhvinh.com

9.3 Operation

Operations for the operand cache are described here. Operations for the instruction cache are similar to those for the operand cache except for the address array not having the U bit, and there being no prefetch operation or write operation, or a write-back buffer.

9.3.1 Searching Cache

If the operand cache is enabled (OCE bit in CCR1 is 1), whenever data in a cache-enabled area is accessed, the cache will be searched to see if the desired data is in the cache. Figure 9.2 illustrates the method by which the cache is searched.

Entries are selected using bits 10 to 4 of the address used to access memory and the tag address of that entry is read. At this time, the upper three bits of the tag address are always cleared to 0. Bits 31 to 11 of the address used to access memory are compared with the read tag address. The address comparison uses all four ways. When the comparison shows a match and the selected entry is valid (V = 1), a cache hit occurs. When the comparison does not show a match or the selected entry is not valid (V = 0), a cache miss occurs. Figure 9.2 shows a hit on way 1.

chanhvinh.com

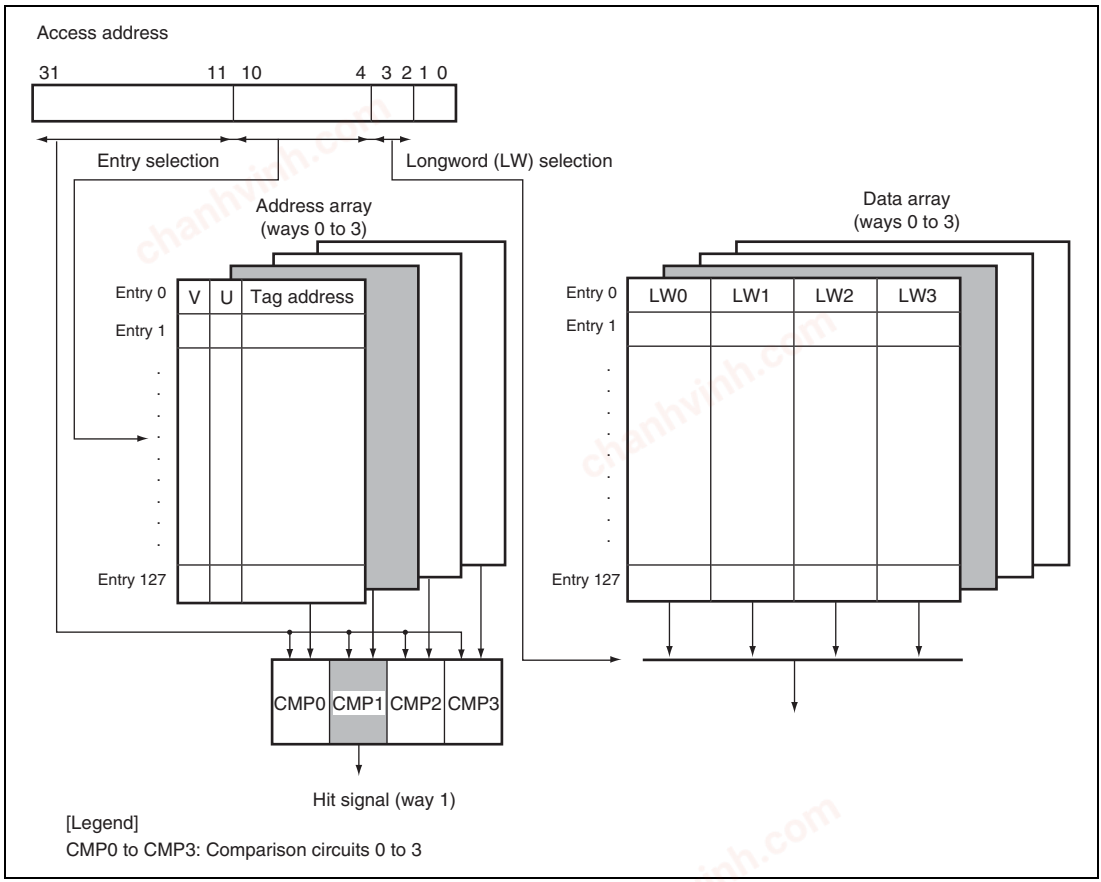

Figure 9.2 Cache Search Scheme

chanhvinh.com

9.3.2 Read Access

(1) Read Hit

In a read access, data is transferred from the cache to the CPU. LRU is updated so that the hit way is the latest.

(2) Read Miss

An internal bus cycle starts and the entry is updated. The way replaced follows table 9.4. Entries are updated in 16-byte units. When the desired data that caused the miss is loaded from the external memory or the large-capacity on-chip RAM to the cache, the data is transferred to the CPU in parallel with being loaded to the cache. When it is loaded in the cache, the V bit is set to 1, and LRU is updated so that the replaced way becomes the latest. In operand cache, the U bit is additionally cleared to 0. When the U bit of the entry to be replaced by updating the entry in write-back mode is 1, the cache update cycle starts after the entry is transferred to the write-back buffer. After the cache completes its update cycle, the write-back buffer writes the entry back to the memory. The write-back unit is 16 bytes. Cache update operation and write-back operation to the memory are performed in wrap-around mode. When the lower four bits of the address of read-miss data are H'4, for example, cache update operation and write-back operation to the memory are performed in the following order of the lower 4-bit value of address: H'4 → H'8 → H'C → H'0.

9.3.3 Prefetch Operation (Only for Operand Cache)

(1) Prefetch Hit

LRU is updated so that the hit way becomes the latest. The contents in other caches are not modified. No data is transferred to the CPU.

(2) Prefetch Miss

No data is transferred to the CPU. The way to be replaced follows table 9.3. Other operations are the same as those in the case of read miss.

chanhvinh.com

9.3.4 Write Operation (Only for Operand Cache)

(1) Write Hit

In a write access in write-back mode, the data is written to the cache and no write cycle to the external memory or the large-capacity on-chip RAM is issued. The U bit of the entry written is set to 1 and LRU is updated so that the hit way becomes the latest.

In write-through mode, the data is written to the cache and a write cycle to the external memory or the large-capacity on-chip RAM is issued. The U bit of the written entry is not updated and LRU is updated so that the replaced way becomes the latest.

(2) Write Miss

In write-back mode, an internal bus cycle starts when a write miss occurs, and the entry is updated. The way to be replaced follows table 9.4. When the U bit of the entry to be replaced is 1, the cache update cycle starts after the entry is transferred to the write-back buffer. Data is written to the cache, the U bit is set to 1, and the V bit is set to 1. LRU is updated so that the replaced way becomes the latest. After the cache completes its update cycle, the write-back buffer writes the entry back to the memory. The write-back unit is 16 bytes. Cache update operation and write-back operation to the memory are performed in wrap-around mode. When the lower four bits of the address of write-miss data are H'4, for example, cache update operation and write-back operation to the memory are performed in the following order of the lower 4-bit value of address: H'4 → H'8 → H'C → H'0.

In write-through mode, no write to cache occurs in a write miss; the write is only to the external memory or the large-capacity on-chip RAM.

9.3.5 Write-Back Buffer (Only for Operand Cache)

When the U bit of the entry to be replaced in the write-back mode is 1, it must be written back to the external memory or the large-capacity on-chip RAM. To increase performance, the entry to be replaced is first transferred to the write-back buffer and fetching of new entries to the cache takes priority over writing back to the external memory. After the cache completes to fetch the new entry, the write-back buffer writes the entry back to the external memory or the large-capacity on-chip RAM. During the write-back cycles, the cache can be accessed. The write-back buffer can hold one line of cache data (16 bytes) and its physical address. Figure 9.3 shows the configuration of the write-back buffer.

chanhvinh.com

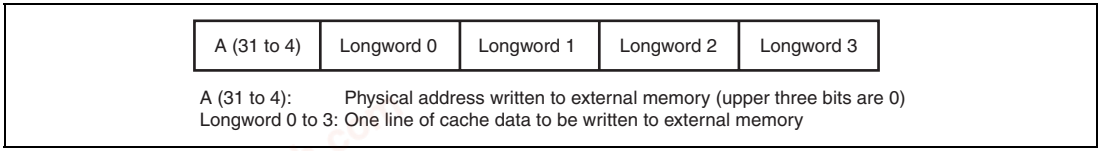

Figure 9.3 Write-Back Buffer Configuration

Operations in sections 9.3.2 to 9.3.5 are summarized in table 9.8.

Table 9.8 Cache Operations

Cache	CPU Cycle	Hit/ Miss	Write-Back Mode/ Write-Through Mode	U Bit	Access to External Memory or Large-Capacity On-Chip RAM (Through Internal Bus)	Cache Contents
Instruction cache	Instruction fetch	Hit	—	—	Not generated	Not updated
		Miss	—	—	Cache update cycle is generated	Updated to new values by cache update cycle
Operand cache	Prefetch/ read	Hit	Either mode is available	x	Not generated	Not updated
		Miss	Write-through mode	—	Cache update cycle is generated	Updated to new values by cache update cycle
			Write-back mode	0	Cache update cycle is generated	Updated to new values by cache update cycle
				1	Cache update cycle is generated. Then write-back cycle in write-back buffer is generated.	Updated to new values by cache update cycle
	Write	Hit	Write-through mode	—	Write cycle CPU issue is generated.	Updated to new values by write cycle the CPU issues
			Write-back mode	x	Not generated	Updated to new values by write cycle the CPU issues
		Miss	Write-through mode	—	Write cycle CPU issue is generated.	Not updated*
			Write-back mode	0	Cache update cycle is generated	Updated to new values by cache update cycle. Subsequently updated again to new values in write cycle CPU issues.
				1	Cache update cycle is generated. Then write-back cycle in write-back buffer is generated.	Updated to new values by cache update cycle. Subsequently updated again to new values in write cycle CPU issues.

chanhvinh.com

[Legend]

x: Don't care.

Note: Cache update cycle: 16-byte read access
Write-back cycle in write-back buffer: 16-byte write access

* Neither LRU updated. LRU is updated in all other cases.

9.3.6 Coherency of Cache and External Memory or Large-Capacity On-Chip RAM

Use software to ensure coherency between the cache and the external memory or the large-capacity on-chip RAM. When memory shared by this LSI and another device is mapped in the cache-enabled space, operate the memory-mapped cache to invalidate and write back as required. The same operation should be performed for the memory shared by the CPU and the direct memory access controller in this LSI.

chanhvinh.com

9.4 Memory-Mapped Cache

To allow software management of the cache, cache contents can be read and written by means of MOV instructions. The instruction cache address array is mapped onto addresses H'F0000000 to H'F07FFFFF, and the data array onto addresses H'F1000000 to H'F17FFFFF. The operand cache address array is mapped onto addresses H'F0800000 to H'F0FFFFFF, and the data array onto addresses H'F1800000 to H'F1FFFFFF. Only longword can be used as the access size for the address array and data array, and instruction fetches cannot be performed.

9.4.1 Address Array

To access an address array, the 32-bit address field (for read/write accesses) and 32-bit data field (for write accesses) must be specified.

In the address field, specify the entry address for selecting the entry, the W bit for selecting the way, and the A bit for specifying the existence of associative operation. In the W bit, B'00 is way 0, B'01 is way 1, B'10 is way 2, and B'11 is way 3. Since the access size of the address array is fixed at longword, specify B'00 for bits 1 and 0 of the address.

The tag address, LRU bits, U bit (only for operand cache), and V bit are specified as data. Always specify 0 for the upper three bits (bits 31 to 29) of the tag address.

For the address and data formats, see figure 9.4.

The following three operations are possible for the address array.

(1) Address Array Read

The tag address, LRU bits, U bit (only for operand cache), and V bit are read from the entry address specified by the address and the entry corresponding to the way. For the read operation, associative operation is not performed regardless of whether the associative bit (A bit) specified by the address is 1 or 0.

(2) Address-Array Write (Non-Associative Operation)

When the associative bit (A bit) in the address field is cleared to 0, write the tag address, LRU bits, U bit (only for operand cache), and V bit, specified by the data field, to the entry address specified by the address and the entry corresponding to the way. When writing to a cache line for which the U bit = 1 and the V bit = 1 in the operand cache address array, write the contents of the cache line back to memory, then write the tag address, LRU bits, U bit, and V bit specified by the data field. When 0 is written to the V bit, 0 must also be written to the U bit of that entry.

chanhvinh.com

Write-back operation to the memory is performed in the following order of the lower 4-bit value of address: H'0 → H'4 → H'8 → H'C.

(3) Address-Array Write (Associative Operation)

When writing with the associative bit (A bit) of the address field set to 1, the addresses in the four ways for the entry specified by the address field are compared with the tag address that is specified by the data field. Write the U bit (only for operand cache) and the V bit specified by the data field to the entry of the way that has a hit. However, the tag address and LRU bits remain unchanged. When there is no way that has a hit, nothing is written and there is no operation. This function is used to invalidate a specific entry in the cache.

When the U bit of the entry that has had a hit is 1 in the operand cache, writing back should be performed. However, when 0 is written to the V bit, 0 must also be written to the U bit of that entry. Write-back operation to the memory is performed in the following order of the lower 4-bit value of address: H'0 → H'4 → H'8 → H'C.

9.4.2 Data Array

To access a data array, the 32-bit address field (for read/write accesses) and 32-bit data field (for write accesses) must be specified. The address field specifies information for selecting the entry to be accessed; the data field specifies the longword data to be written to the data array.

Specify the entry address for selecting the entry, the L bit indicating the longword position within the (16-byte) line, and the W bit for selecting the way. In the L bit, B'00 is longword 0, B'01 is longword 1, B'10 is longword 2, and B'11 is longword 3. In the W bit, B'00 is way 0, B'01 is way 1, B'10 is way 2, and B'11 is way 3. Since the access size of the data array is fixed at longword, specify B'00 for bits 1 and 0 of the address.

For the address and data formats, see figure 9.4.

The following two operations are possible for the data array. Information in the address array is not modified by this operation.

(1) Data Array Read

The data specified by the L bit in the address is read from the entry address specified by the address and the entry corresponding to the way.

chanhvinh.com

(2) Data Array Write

The longword data specified by the data is written to the position specified by the L bit in the address from the entry address specified by the address and the entry corresponding to the way.

1. Instruction cache

1.1 Address array access

(a) Address specification

Read access

31 to 23	22 to 13	12	11	10 to 4	3	2	1	0
111100000	*----------*	W	Entry address		0	*	0	0

Write access

31 to 23	22 to 13	12	11	10 to 4	3	2	1	0
111100000	*----------*	W	Entry address		A	*	0	0

(b) Data specification (both read and write accesses)

31 to 29	28 to 11	10	9 to 4	3	2	1	0
0 0 0	Tag address (28 to 11)	E	LRU	X	X	X	V

1.2 Data array access (both read and write accesses)

(a) Address specification

31 to 23	22 to 13	12	11	10 to 4	3	2	1	0
111100010	*----------*	W	Entry address		L		0	0

(b) Data specification

31 to 0
Longword data

2. Operand cache

2.1 Address array access

(a) Address specification

Read access

31 to 23	22 to 13	12	11	10 to 4	3	2	1	0
111100001	*----------*	W	Entry address		0	*	0	0

Write access

31 to 23	22 to 13	12	11	10 to 4	3	2	1	0
111100001	*----------*	W	Entry address		A	*	0	0

(b) Data specification (both read and write accesses)

31 to 29	28 to 11	10	9 to 4	3	2	1	0
0 0 0	Tag address (28 to 11)	E	LRU	X	X	U	V

2.2 Data array access (both read and write accesses)

(a) Address specification

31 to 23	22 to 13	12	11	10 to 4	3	2	1	0
111100011	*----------*	W	Entry address		L		0	0

(b) Data specification

31 to 0
Longword data

[Legend]
*: Don't care
E: Bit 10 of entry address for read, don't care for write
X: 0 for read, don't care for write

Figure 9.4 Specifying Address and Data for Memory-Mapped Cache Access

chanhvinh.com

9.4.3 Usage Examples

(1) Invalidating Specific Entries

Specific cache entries can be invalidated by writing 0 to the entry's V bit in the memory mapping cache access. When the A bit is 1, the tag address specified by the write data is compared to the tag address within the cache selected by the entry address, and data is written to the bits V and U specified by the write data when a match is found. If no match is found, there is no operation. When the V bit of an entry in the address array is set to 0, the entry is written back if the entry's U bit is 1.

An example when a write data is specified in R0 and an address is specified in R1 is shown below.

```
; R0=H'0110 0010; tag address(28-11)=B'0 0001 0001 0000 0000 0, U=0, V=0
; R1=H'F080 0088; operand cache address array access, entry=B'000 1000, A=1
;
 MOV.L  R0,@R1
```

(2) Reading the Data of a Specific Entry

The data section of a specific cache entry can be read by the memory mapping cache access. The longword indicated in the data field of the data array in figure 9.4 is read into the register.

An example when an address is specified in R0 and data is read in R1 is shown below.

```
; R0=H'F100 004C; instruction cache data array access, entry=B'000 0100,
; Way=0, longword address=3
;
 MOV.L  @R0,R1
```

chanhvinh.com

9.4.4 Usage Notes

1. Programs that access memory-mapped cache of the operand cache should be placed in a cache-disabled space. Programs that access memory-mapped cache of the instruction cache should be placed in a cache-disabled space, and in each of the beginning and the end of that, two or more read accesses to on-chip peripheral modules or external address space (cache-disabled address) should be executed.
2. Rewriting the address array contents so that two or more ways are hit simultaneously is prohibited. Operation is not guaranteed if the address array contents are changed so that two or more ways are hit simultaneously.
3. Registers and memory-mapped cache can be accessed only by the CPU and not by the direct memory access controller.

chanhvinh.com

Section 10 Bus State Controller

The bus state controller outputs control signals for various types of memory and external devices that are connected to the external address space. The functions of this module enable this LSI to connect directly with SRAM, SDRAM, and other memory storage devices, and external devices.

10.1 Features

1. External address space
   - A maximum of 64 Mbytes for each of areas CS0 to CS5.
   - Can specify the normal space interface, SRAM interface with byte selection, burst ROM (clocked synchronous or asynchronous), MPX-I/O, SDRAM memory type, and PCMCIA interface for each address space.
   - Can select the data bus width (8, 16, or 32 bits) for each of address spaces.
   - Controls insertion of wait cycles for each address space.
   - Controls insertion of wait cycles for each read access and write access.
   - Can set independent idle cycles during the continuous access for five cases: read-write (in same space/different spaces), read-read (in same space/different spaces), the first cycle is a write access.
2. Normal space interface
   - Supports the interface that can directly connect to the SRAM.
3. Burst ROM interface (clocked asynchronous)
   - High-speed access to the ROM that has the page mode function.
4. MPX-I/O interface
   - Can directly connect to a peripheral LSI that needs an address/data multiplexing.
5. SDRAM interface
   - Can set the SDRAM in up to two areas.
   - Multiplex output for row address/column address.
   - Efficient access by single read/single write.
   - High-speed access in bank-active mode.
   - Supports an auto-refresh and self-refresh.
   - Supports a power-down mode.
   - Issues MRS and EMRS commands.

chanhvinh.com

6. PCMCIA direct interface
   - Supports the IC memory card and I/O card interface defined in JEIDA specifications Ver. 4.2 (PCMCIA2.1 Rev. 2.1).
   - Wait-cycle insertion controllable by program.
7. SRAM interface with byte selection
   - Can connect directly to a SRAM with byte selection.
8. Burst ROM interface (clocked synchronous)
   - Can connect directly to a burst ROM of the clocked synchronous type.
9. Bus arbitration
   - Shares all of the resources with other CPU and outputs the bus enable after receiving the bus request from external devices.
10. Refresh function
    - Supports the auto-refresh and self-refresh functions.
    - Specifies the refresh interval using the refresh counter and clock selection.
    - Can execute concentrated refresh by specifying the refresh counts (1, 2, 4, 6, or 8).
11. Usage as interval timer for refresh counter
    - Generates an interrupt request at compare match.

chanhvinh.com

Figure 10.1 shows a block diagram of this module.

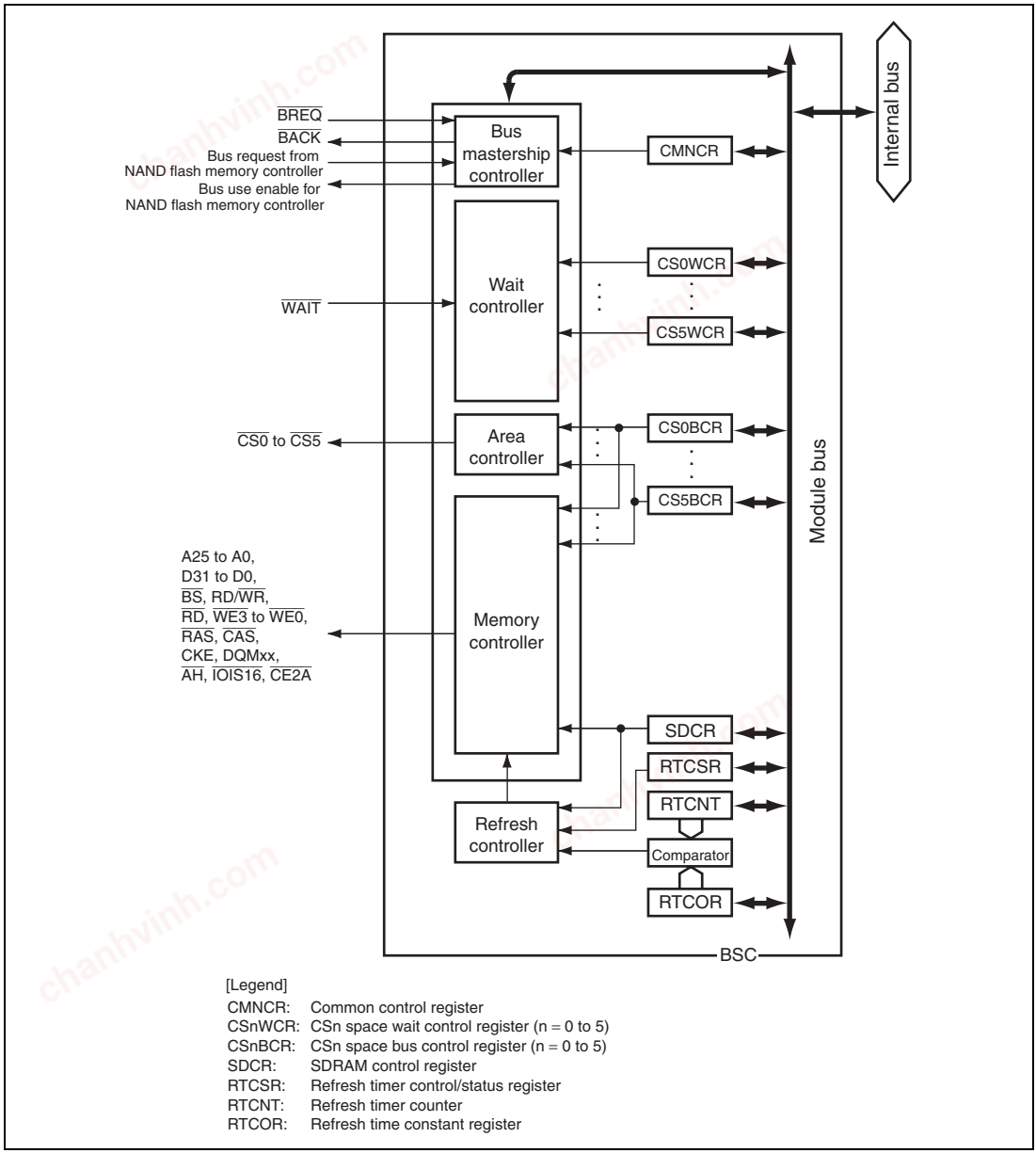

Figure 10.1 Block Diagram of Bus State Controller

chanhvinh.com

10.2 Input/Output Pins

Table 10.1 shows the pin configuration.

Table 10.1 Pin Configuration

Name	I/O	Function
A25 to A0	Output	Address bus
D31 to D0	I/O	Data bus
$\overline{BS}$	Output	Bus cycle start
$\overline{CS0}$ to $\overline{CS4}$	Output	Chip select
$\overline{CS5}$/$\overline{CE1A}$	Output	Chip select Function as PCMCIA card select signals for D7 to D0 when PCMCIA is used.
$\overline{CE2A}$	Output	Function as PCMCIA card select signals for D15 to D8.
RD/$\overline{WR}$	Output	Read/write Connects to $\overline{WE}$ pins when SDRAM or SRAM with byte selection is connected.
$\overline{RD}$	Output	Read pulse signal (read data output enable signal) Functions as a strobe signal for indicating memory read cycles when PCMCIA is used.
$\overline{WE3}$/DQMUU/$\overline{ICIOWR}$/$\overline{AH}$	Output	Indicates that D31 to D24 are being written to. Connected to the byte select signal when a SRAM with byte selection is connected. Functions as the select signals for D31 to D24 when SDRAM is connected. Functions as a strobe signal for indicating I/O write cycles when PCMCIA is used. Functions as the address hold signal when the MPX-I/O is used.
$\overline{WE2}$/DQMUL/$\overline{ICIORD}$	Output	Indicates that D23 to D16 are being written to. Connected to the byte select signal when a SRAM with byte selection is connected. Functions as the select signals for D23 to D16 when SDRAM is connected. Functions as a strobe signal for indicating I/O read cycles when PCMCIA is used.

chanhvinh.com

Name	I/O	Function
$\overline{WE1}$/DQMLU/$\overline{WE}$	Output	Indicates that D15 to D8 are being written to. Connected to the byte select signal when a SRAM with byte selection is connected. Functions as the select signals for D15 to D8 when SDRAM is connected. Functions as a strobe signal for indicating memory write cycles when PCMCIA is used.
$\overline{WE0}$/DQMLL	Output	Indicates that D7 to D0 are being written to. Connected to the byte select signal when a SRAM with byte selection is connected. Functions as the select signals for D7 to D0 when SDRAM is connected.
$\overline{RAS}$	Output	Connects to $\overline{RAS}$ pin when SDRAM is connected.
$\overline{CAS}$	Output	Connects to $\overline{CAS}$ pin when SDRAM is connected.
CKE	Output	Connects to CKE pin when SDRAM is connected.
$\overline{WAIT}$	Input	External wait input
$\overline{BREQ}$	Input	Bus request input
$\overline{BACK}$	Output	Bus enable output
$\overline{IOIS16}$	Input	Indicates 16-bit I/O of PCMIA. Enabled only in little endian mode. The pin should be driven low in big endian mode.

chanhvinh.com

10.3 Area Overview

10.3.1 Address Map

In the architecture, this LSI has a 32-bit address space, which is divided into cache-enabled, cache-disabled, and on-chip spaces (on-chip RAM, on-chip peripheral modules, and reserved areas) according to the upper bits of the address.

External address spaces CS0 to CS5 are cache-enabled when internal address A29 = 0 or cache-disabled when A29 = 1.

The kind of memory to be connected and the data bus width are specified in each partial space. The address map for the external address space is listed below.

Table 10.2 Address Map

Internal Address	Space	Memory to be Connected	Cache
H'00000000 to H'03FFFFFF	CS0	Normal space, SRAM with byte selection, burst ROM (asynchronous or synchronous)	Cache-enabled
H'04000000 to H'07FFFFFF	CS1	Normal space, SRAM with byte selection	
H'08000000 to H'0BFFFFFF	CS2	Normal space, SRAM with byte selection, SDRAM	
H'0C000000 to H'0FFFFFFF	CS3	Normal space, SRAM with byte selection, SDRAM	
H'10000000 to H'13FFFFFF	CS4	Normal space, SRAM with byte selection, burst ROM (asynchronous)	
H'14000000 to H'17FFFFFF	CS5	Normal space, SRAM with byte selection, MPX-I/O, PCMCIA	
H'18000000 to H'1FFFFFFF	Other	SPI multi I/O bus space, large-capacity on-chip RAM, reserved area*	
H'20000000 to H'23FFFFFF	CS0	Normal space, SRAM with byte selection, burst ROM (asynchronous or synchronous)	Cache-disabled
H'24000000 to H'27FFFFFF	CS1	Normal space, SRAM with byte selection	
H'28000000 to H'2BFFFFFF	CS2	Normal space, SRAM with byte selection, SDRAM	
H'2C000000 to H'2FFFFFFF	CS3	Normal space, SRAM with byte selection, SDRAM	
H'30000000 to H'33FFFFFF	CS4	Normal space, SRAM with byte selection, burst ROM (asynchronous)	
H'34000000 to H'37FFFFFF	CS5	Normal space, SRAM with byte selection, MPX-I/O, PCMCIA	

chanhvinh.com

Internal Address	Space	Memory to be Connected	Cache
H'38000000 to H'3FFFFFFF	Other	SPI multi I/O bus space, large-capacity on-chip RAM, reserved area*	Cache-disabled
H'40000000 to H'FFFFFFFF	Other	High-speed on-chip RAM, on-chip peripheral modules, reserved area*	—

Note: * For the large-capacity on-chip RAM space and high-speed on-chip RAM space, access the addresses shown in section 47, On-Chip RAM. For the on-chip peripheral module space, access the addresses shown in section 51, List of Registers. Do not access addresses which are not described in these sections. Otherwise, the correct operation cannot be guaranteed.

10.3.2 Data Bus Width, Endian Specification, and Related Pin Setting for Each Area Depending on Boot Mode

The initial state of data bus width, endian specification, and settings of the pins related to this module depends on boot mode. For boot mode, refer to section 4, Boot Mode.

In boot modes 0 and 1, the state of area 0 is fixed to the state with bus width of 16 or 32 bits and big endian, because this LSI is started up by the program stored in the ROM connected to area 0. The initial states of areas 1 to 5 are the same as that of area 0, but can be changed by the program. Immediately after a power-on reset in these modes, some of the address and data-bus signals and the $\overline{CS0}$ and $\overline{RD}$ signals are automatically selected by default as the functions of the corresponding pins, since these signals are required to read ROM data from area 0. With the exception of these pins, the general purpose pin function is selected by default, and other required pin functions must be specified by the program. Read access to area 0 is only permitted before the pin settings are completed.

In boot modes 2 to 5, the state of areas 0 to 5 can be changed from the initial state by the program, because the LSI is started by the program stored in the NAND flash memory, the serial flash memory, the NAND flash memory with the SD controller, or the NAND flash memory with the MMC controller. Since pin functions related to this module are not set automatically, they need to be set by the program. Do not access external address spaces before the pin settings are completed.

Table 10.3 shows the initial state by areas 0 to 5 in boot modes 0, 1, and 2 to 5.

The sample access waveforms shown in this section include the pins such as $\overline{BS}$, RD/$\overline{WR}$, and $\overline{WEn}$. They are the waveforms when pin functions are assigned to the general I/O ports. For example, when 16-bit bus width is used in boot mode 1, setting for pin A1 is needed. When 8-bit bus width is used, setting for pins A1 and A0 is also needed.

For details on pin function settings, see section 48, General Purpose I/O Ports.

chanhvinh.com

Table 10.3 Initial States by Areas in Boot Modes 0, 1, and 2 to 5

Boot Mode	Item	Area 0	Areas 1 to 5
0	Data bus width	Fixed to 16 bits. Not changeable.	16 bits. Can be changed by program.
	Endian specification	Fixed to big endian. Not changeable.	Big endian. Can be changed by program.
	Settings of pins related to this module	Pins A20 to A1, D15 to D0, $\overline{CS0}$, and $\overline{RD}$ are set automatically. Other pins need to be set by program.	
1	Data bus width	Fixed to 32 bits. Not changeable.	32 bits. Can be changed by program.
	Endian specification	Fixed to big endian. Not changeable.	Big endian. Can be changed by program.
	Settings of pins related to this module	Pins A20 to A2, D31 to D0, $\overline{CS0}$, and $\overline{RD}$ are set automatically. Other pins need to be set by program.	
2 to 5	Data bus width	32 bits. Can be changed by program.	
	Endian specification	Big endian. Can be changed by program.	
	Settings of pins related to this module	General I/O function. For external bus access, all the necessary pins need to be set by program.	

Notes: 1. In boot mode 0 or 1, if a boot ROM that uses higher-order address lines than A21 is connected, the circuit board must include pull-down resistors for those address lines.

2. The data-bus width may be limited by the type of memory in use. For details, section 10.4.2, CSn Space Bus Control Register (CSnBCR) (n = 0 to 5).

3. Since the $\overline{CS4}$ and A22 pin functions are assigned to the same pin, area 4 and modules requiring A22 and higher-order address lines cannot be used at the same time.

chanhvinh.com

10.4 Register Descriptions

Table 10.4 shows the register configuration of this module.

Do not access the areas until settings of the connected memory interface are completed.

Table 10.4 Register Configuration

Register Name	Abbreviation	R/W	Initial Value	Address	Access Size
Common control register	CMNCR	R/W	H'00001010	H'FFFC0000	32
CS0 space bus control register	CS0BCR	R/W	H'36DB0400*	H'FFFC0004	32
CS1 space bus control register	CS1BCR	R/W	H'36DB0400*	H'FFFC0008	32
CS2 space bus control register	CS2BCR	R/W	H'36DB0400*	H'FFFC000C	32
CS3 space bus control register	CS3BCR	R/W	H'36DB0400*	H'FFFC0010	32
CS4 space bus control register	CS4BCR	R/W	H'36DB0400*	H'FFFC0014	32
CS5 space bus control register	CS5BCR	R/W	H'36DB0400*	H'FFFC0018	32
CS0 space wait control register	CS0WCR	R/W	H'00000500	H'FFFC0028	32
CS1 space wait control register	CS1WCR	R/W	H'00000500	H'FFFC002C	32
CS2 space wait control register	CS2WCR	R/W	H'00000500	H'FFFC0030	32
CS3 space wait control register	CS3WCR	R/W	H'00000500	H'FFFC0034	32
CS4 space wait control register	CS4WCR	R/W	H'00000500	H'FFFC0038	32
CS5 space wait control register	CS5WCR	R/W	H'00000500	H'FFFC003C	32

chanhvinh.com

Register Name	Abbreviation	R/W	Initial Value	Address	Access Size
SDRAM control register	SDCR	R/W	H'00000000	H'FFFC004C	32
Refresh timer control/status register	RTCSR	R/W	H'00000000	H'FFFC0050	32
Refresh timer counter	RTCNT	R/W	H'00000000	H'FFFC0054	32
Refresh time constant register	RTCOR	R/W	H'00000000	H'FFFC0058	32

Note: * H'36DB0400 in boot mode 0; H'36DB0600 in boot modes 1 to 5

chanhvinh.com

10.4.1 Common Control Register (CMNCR)

CMNCR is a 32-bit register that controls the common items for each area.

Bit:	31	30	29	28	27	26	25	24	23	22	21	20	19	18	17	16
	-	-	-	-	-	-	-	-	-	-	-	-	-	-	-	-
Initial value:	0	0	0	0	0	0	0	0	0	0	0	0	0	0	0	0
R/W:	R	R	R	R	R	R	R	R	R	R	R	R	R	R	R	R

Bit:	15	14	13	12	11	10	9	8	7	6	5	4	3	2	1	0
	-	-	-	-	BLOCK	DPRTY[1:0]		DMAIW[2:0]			DMA IWA	-	-	-	HIZ MEM	HIZ CNT*
Initial value:	0	0	0	1	0	0	0	0	0	0	0	1	0	0	0	0
R/W:	R	R	R	R	R/W	R/W	R/W	R/W	R/W	R/W	R/W	R	R	R	R/W	R/W

Bit	Bit Name	Initial Value	R/W	Description
31 to 13	—	All 0	R	Reserved These bits are always read as 0. The write value should always be 0.
12	—	1	R	Reserved This bit is always read as 1. The write value should always be 1.
11	BLOCK	0	R/W	Bus Lock Specifies whether or not the $\overline{\text{BREQ}}$ signal is received. 0: Receives $\overline{\text{BREQ}}$. 1: Does not receive $\overline{\text{BREQ}}$.

chanhvinh.com

Bit	Bit Name	Initial Value	R/W	Description
10, 9	DPRTY[1:0]	00	R/W	DMA Burst Transfer Priority Specify the priority for a refresh request/bus mastership request during DMA burst transfer. 00: Accepts a refresh request and bus mastership request during DMA burst transfer. 01: Accepts a refresh request but does not accept a bus mastership request during DMA burst transfer. 10: Accepts neither a refresh request nor a bus mastership request during DMA burst transfer. 11: Reserved (setting prohibited)
8 to 6	DMAIW[2:0]	000	R/W	Wait states between access cycles when DMA single address transfer is performed. Specify the number of idle cycles to be inserted after an access to an external device with DACK when DMA single address transfer is performed. The method of inserting idle cycles depends on the contents of DMAIWA. 000: No idle cycle inserted 001: 1 idle cycle inserted 010: 2 idle cycles inserted 011: 4 idle cycles inserted 100: 6 idle cycles inserted 101: 8 idle cycles inserted 110: 10 idle cycles inserted 111: 12 idle cycles inserted

chanhvinh.com

Bit	Bit Name	Initial Value	R/W	Description
5	DMAIWA	0	R/W	Method of inserting wait states between access cycles when DMA single address transfer is performed. Specifies the method of inserting the idle cycles specified by the DMAIW[2:0] bit. Clearing this bit will make this LSI insert the idle cycles when another device, which includes this LSI, drives the data bus after an external device with DACK drove it. However, when the external device with DACK drives the data bus continuously, idle cycles are not inserted. Setting this bit will make this LSI insert the idle cycles after an access to an external device with DACK, even when the continuous access cycles to an external device with DACK are performed. 0: Idle cycles inserted when another device drives the data bus after an external device with DACK drove it. 1: Idle cycles always inserted after an access to an external device with DACK
4	—	1	R	Reserved This bit is always read as 1. The write value should always be 1.
3, 2	—	All 0	R	Reserved These bits are always read as 0. The write value should always be 0.
1	HIZMEM	0	R/W	High-Z Memory Control Specifies the pin state in software standby mode or deep standby mode for A25 to A0, $\overline{BS}$, $\overline{CSn}$, $\overline{CE2A}$, RD/$\overline{WR}$, $\overline{WEn}$/DQMxx/$\overline{AH}$, and $\overline{RD}$. At bus-released state, these pin are high-impedance states regardless of the setting value of the HIZMEM bit. 0: High impedance in software standby mode or deep standby mode. 1: Driven in software standby mode or deep standby mode

chanhvinh.com

Bit	Bit Name	Initial Value	R/W	Description
0	HIZCNT*	0	R/W	High-Z Control Specifies the state in software standby mode, deep standby mode, or bus-released state for CKE, $\overline{RAS}$, and $\overline{CAS}$. 0: High impedance in software standby mode, deep standby mode, or bus-released state for CKE, $\overline{RAS}$, and $\overline{CAS}$. 1: Driven in software standby mode, deep standby mode, or bus-released state for CKE, $\overline{RAS}$, and $\overline{CAS}$.

Note: * For High-Z control of CKIO, see section 5, Clock Pulse Generator.

chanhvinh.com

10.4.2 CSn Space Bus Control Register (CSnBCR) (n = 0 to 5)

CSnBCR is a 32-bit readable/writable register that specifies the memory connected to each space, the number of idle cycles between bus cycles, and the bus width.

Do not access external memory for the corresponding area until CSnBCR initial setting and pin setting are completed.

Idle cycles may be inserted even when they are not specified. For details, see section 10.5.11, Wait between Access Cycles.

Bit:	31	30	29	28	27	26	25	24	23	22	21	20	19	18	17	16
	-	IWW[2:0]			IWRWD[2:0]			IWRWS[2:0]			IWRRD[2:0]			IWRRS[2:0]		
Initial value:	0	0	1	1	0	1	1	0	1	1	0	1	1	0	1	1
R/W:	R	R/W	R/W	R/W	R/W	R/W	R/W	R/W	R/W	R/W	R/W	R/W	R/W	R/W	R/W	R/W

Bit:	15	14	13	12	11	10	9	8	7	6	5	4	3	2	1	0
	-	TYPE[2:0]			ENDIAN	BSZ[1:0]		-	-	-	-	-	-	-	-	-
Initial value:	0	0	0	0	0	1*	0*	0	0	0	0	0	0	0	0	0
R/W:	R	R/W	R/W	R/W	R/W	R/W	R/W	R	R	R	R	R	R	R	R	R

Note: * B'10 in boot mode 0; B'11 in boot mode 1 to 5.

Bit	Bit Name	Initial Value	R/W	Description
31	—	0	R	Reserved This bit is always read as 0. The write value should always be 0.
30 to 28	IWW[2:0]	011	R/W	Idle Cycles between Write-Read Cycles and Write-Write Cycles These bits specify the number of idle cycles to be inserted after the access to a memory that is connected to the space. The target access cycles are the write-read cycle and write-write cycle. 000: No idle cycle inserted 001: 1 idle cycle inserted 010: 2 idle cycles inserted 011: 4 idle cycles inserted 100: 6 idle cycles inserted 101: 8 idle cycles inserted 110: 10 idle cycles inserted 111: 12 idle cycles inserted

chanhvinh.com

Bit	Bit Name	Initial Value	R/W	Description
27 to 25	IWRWD[2:0]	011	R/W	Idle Cycles for Another Space Read-Write Specify the number of idle cycles to be inserted after the access to a memory that is connected to the space. The target access cycle is a read-write one in which continuous access cycles switch between different spaces. 000: No idle cycle inserted 001: 1 idle cycle inserted 010: 2 idle cycles inserted 011: 4 idle cycles inserted 100: 6 idle cycles inserted 101: 8 idle cycles inserted 110: 10 idle cycles inserted 111: 12 idle cycles inserted
24 to 22	IWRWS[2:0]	011	R/W	Idle Cycles for Read-Write in the Same Space Specify the number of idle cycles to be inserted after the access to a memory that is connected to the space. The target cycle is a read-write cycle of which continuous access cycles are for the same space. 000: No idle cycle inserted 001: 1 idle cycle inserted 010: 2 idle cycles inserted 011: 4 idle cycles inserted 100: 6 idle cycles inserted 101: 8 idle cycles inserted 110: 10 idle cycles inserted 111: 12 idle cycles inserted

chanhvinh.com

Bit	Bit Name	Initial Value	R/W	Description
21 to 19	IWRRD[2:0]	011	R/W	Idle Cycles for Read-Read in Another Space Specify the number of idle cycles to be inserted after the access to a memory that is connected to the space. The target cycle is a read-read cycle of which continuous access cycles switch between different space. 000: No idle cycle inserted 001: 1 idle cycle inserted 010: 2 idle cycles inserted 011: 4 idle cycles inserted 100: 6 idle cycles inserted 101: 8 idle cycles inserted 110: 10 idle cycles inserted 111: 12 idle cycles inserted
18 to 16	IWRRS[2:0]	011	R/W	Idle Cycles for Read-Read in the Same Space Specify the number of idle cycles to be inserted after the access to a memory that is connected to the space. The target cycle is a read-read cycle of which continuous access cycles are for the same space. 000: No idle cycle inserted 001: 1 idle cycle inserted 010: 2 idle cycles inserted 011: 4 idle cycles inserted 100: 6 idle cycles inserted 101: 8 idle cycles inserted 110: 10 idle cycles inserted 111: 12 idle cycles inserted
15	—	0	R	Reserved This bit is always read as 0. The write value should always be 0.

chanhvinh.com

Bit	Bit Name	Initial Value	R/W	Description
14 to 12	TYPE[2:0]	000	R/W	Specify the type of memory connected to a space. 000: Normal space 001: Burst ROM (clock asynchronous) 010: MPX-I/O 011: SRAM with byte selection 100: SDRAM 101: PCMCIA 110: Reserved (setting prohibited) 111: Burst ROM (clock synchronous) For details for memory type in each area, see table 10.2. Note: When connecting the burst ROM to the CS0 space in boot modes 0 and 1, change the CS0WCR register to the settings by the burst ROM CS0WCR uses and then set TYPE[2:0] to the burst ROM setting. In boot modes 2 to 5, memory access should be performed after setting CS0BCR and CS0WCR.
11	ENDIAN	0	R/W	Endian Setting Specifies the arrangement of data in a space. 0: Arranged in big endian 1: Arranged in little endian Note: Little endian cannot be set for area 0 in boot modes 0 and 1. In this case, this bit of CS0BCR is always read as 0. The write value should always be 0.

chanhvinh.com

Bit	Bit Name	Initial Value	R/W	Description
10, 9	BSZ[1:0]	10*	R/W	Data Bus Width Specification Specify the data bus widths of spaces. 00: Reserved (setting prohibited) 01: 8-bit size 10: 16-bit size 11: 32-bit size For MPX-I/O, selects bus width by address Notes: 1. If area 5 is specified as MPX-I/O, the bus width can be specified as 8 bits or 16 bits by the address according to the SZSEL bit in CS5WCR by specifying the BSZ[1:0] bits to 11. The fixed bus width can be specified as 8 bits or 16 bits 2. In boot modes 0 and 1, the BSZ[1:0] bits settings in CS0BCR are ignored. 3. If area 5 is specified as PCMCIA space, the bus width can be specified as either 8 bits or 16 bits. 4. If area 2 or area 3 is specified as SDRAM space, the bus width can be specified as either 16 bits or 32 bits. 5. If area 0 is specified as clocked synchronous burst ROM space, the bus width can be specified as either 16 bits or 32 bits.
8 to 0	—	All 0	R	Reserved These bits are always read as 0. The write value should always be 0.

Note: * B'10 in boot mode 0; B'11 in boot modes 1 to 5.

chanhvinh.com

10.4.3 CSn Space Wait Control Register (CSnWCR) (n = 0 to 5)

CSnWCR specifies various wait cycles for memory access. The bit configuration of this register varies as shown below according to the memory type (TYPE2 to TYPE0) specified by the CSn space bus control register (CSnBCR). Specify CSnWCR before accessing the target area. Specify CSnBCR first, then specify CSnWCR.

(1) Normal Space, SRAM with Byte Selection, and MPX-I/O

- CS0WCR

Bit:	31	30	29	28	27	26	25	24	23	22	21	20	19	18	17	16
	-	-	-	-	-	-	-	-	-	-	-*	BAS	-	-	-*	-*
Initial value:	0	0	0	0	0	0	0	0	0	0	0	0	0	0	0	0
R/W:	R	R	R	R	R	R	R	R	R	R	R/W	R/W	R	R	R/W	R/W

Bit:	15	14	13	12	11	10	9	8	7	6	5	4	3	2	1	0
	-	-	-	SW[1:0]		WR[3:0]				WM	-	-	-	-	HW[1:0]	
Initial value:	0	0	0	0	0	1	0	1	0	0	0	0	0	0	0	0
R/W:	R	R	R	R/W	R/W	R/W	R/W	R/W	R/W	R/W	R	R	R	R	R/W	R/W

Bit	Bit Name	Initial Value	R/W	Description
31 to 22	—	All 0	R	Reserved These bits are always read as 0. The write value should always be 0.
21	—*	0	R/W	Reserved Set this bit to 0 when the interfaces for normal space or for SRAM with byte selection are used.
20	BAS	0	R/W	SRAM with Byte Selection Byte Access Select Specifies the $\overline{WEn}$ and RD/$\overline{WR}$ signal timing when the SRAM interface with byte selection is used. 0: Asserts the $\overline{WEn}$ signal at the read/write timing and asserts the RD/$\overline{WR}$ signal during the write access cycle. 1: Asserts the $\overline{WEn}$ signal during the read/write access cycle and asserts the RD/$\overline{WR}$ signal at the write timing.
19, 18	—	All 0	R	Reserved These bits are always read as 0. The write value should always be 0.

chanhvinh.com

Bit	Bit Name	Initial Value	R/W	Description
17, 16	—*	All 0	R/W	Reserved Set these bits to 0 when the interfaces for normal space or for SRAM with byte selection are used.
15 to 13	—	All 0	R	Reserved These bits are always read as 0. The write value should always be 0.
12, 11	SW[1:0]	00	R/W	Number of Delay Cycles from Address, $\overline{CS0}$ Assertion to $\overline{RD}$, $\overline{WEn}$ Assertion Specify the number of delay cycles from address and $\overline{CS0}$ assertion to $\overline{RD}$ and $\overline{WEn}$ assertion. 00: 0.5 cycles 01: 1.5 cycles 10: 2.5 cycles 11: 3.5 cycles
10 to 7	WR[3:0]	1010	R/W	Number of Access Wait Cycles Specify the number of cycles that are necessary for read/write access. 0000: No cycle 0001: 1 cycle 0010: 2 cycles 0011: 3 cycles 0100: 4 cycles 0101: 5 cycles 0110: 6 cycles 0111: 8 cycles 1000: 10 cycles 1001: 12 cycles 1010: 14 cycles 1011: 18 cycles 1100: 24 cycles 1101: Reserved (setting prohibited) 1110: Reserved (setting prohibited) 1111: Reserved (setting prohibited)

chanhvinh.com

Bit	Bit Name	Initial Value	R/W	Description
6	WM	0	R/W	External Wait Mask Specification Specifies whether or not the external wait input is valid. The specification by this bit is valid even when the number of access wait cycle is 0. 0: External wait input is valid 1: External wait input is ignored
5 to 2	—	All 0	R	Reserved These bits are always read as 0. The write value should always be 0.
1, 0	HW[1:0]	00	R/W	Delay Cycles from $\overline{RD}$, $\overline{WEn}$ Negation to Address, $\overline{CS0}$ Negation Specify the number of delay cycles from $\overline{RD}$ and $\overline{WEn}$ negation to address and $\overline{CS0}$ negation. 00: 0.5 cycles 01: 1.5 cycles 10: 2.5 cycles 11: 3.5 cycles

Note: * In boot modes 0 and 1, to connect the burst ROM to the CS0 space and switch to burst ROM interface after activation, set the TYPE[2:0] bits in CS0BCR after setting the burst number by the bits 20 and 21 and the burst wait cycle number by the bits 16 and 17. Do not write 1 to the reserved bits other than above bits.

- CS1WCR

Bit:	31	30	29	28	27	26	25	24	23	22	21	20	19	18	17	16
	-	-	-	-	-	-	-	-	-	-	-	BAS	-	WW[2:0]		
Initial value:	0	0	0	0	0	0	0	0	0	0	0	0	0	0	0	0
R/W:	R	R	R	R	R	R	R	R	R	R	R	R/W	R	R/W	R/W	R/W

Bit:	15	14	13	12	11	10	9	8	7	6	5	4	3	2	1	0
	-	-	-	SW[1:0]		WR[3:0]				WM	-	-	-	-	HW[1:0]	
Initial value:	0	0	0	0	0	1	0	1	0	0	0	0	0	0	0	0
R/W:	R	R	R	R/W	R/W	R/W	R/W	R/W	R/W	R/W	R	R	R	R	R/W	R/W

Bit	Bit Name	Initial Value	R/W	Description
31 to 21	—	All 0	R	Reserved These bits are always read as 0. The write value should always be 0.

chanhvinh.com

Bit	Bit Name	Initial Value	R/W	Description
20	BAS	0	R/W	SRAM with Byte Selection Byte Access Select Specifies the $\overline{\text{WEn}}$ and RD/$\overline{\text{WR}}$ signal timing when the SRAM interface with byte selection is used. 0: Asserts the $\overline{\text{WEn}}$ signal at the read/write timing and asserts the RD/$\overline{\text{WR}}$ signal during the write access cycle. 1: Asserts the $\overline{\text{WEn}}$ signal during the read/write access cycle and asserts the RD/$\overline{\text{WR}}$ signal at the write timing.
19	—	0	R	Reserved This bit is always read as 0. The write value should always be 0.
18 to 16	WW[2:0]	000	R/W	Number of Write Access Wait Cycles Specify the number of cycles that are necessary for write access. 000: The same cycles as WR[3:0] setting (number of read access wait cycles) 001: No cycle 010: 1 cycle 011: 2 cycles 100: 3 cycles 101: 4 cycles 110: 5 cycles 111: 6 cycles
15 to 13	—	All 0	R	Reserved These bits are always read as 0. The write value should always be 0.
12, 11	SW[1:0]	00	R/W	Number of Delay Cycles from Address, $\overline{\text{CSn}}$ Assertion to $\overline{\text{RD}}$, $\overline{\text{WEn}}$ Assertion Specify the number of delay cycles from address and $\overline{\text{CSn}}$ assertion to $\overline{\text{RD}}$ and $\overline{\text{WEn}}$ assertion. 00: 0.5 cycles 01: 1.5 cycles 10: 2.5 cycles 11: 3.5 cycles

chanhvinh.com

Bit	Bit Name	Initial Value	R/W	Description
10 to 7	WR[3:0]	1010	R/W	Number of Read Access Wait Cycles Specify the number of cycles that are necessary for read access. 0000: No cycle 0001: 1 cycle 0010: 2 cycles 0011: 3 cycles 0100: 4 cycles 0101: 5 cycles 0110: 6 cycles 0111: 8 cycles 1000: 10 cycles 1001: 12 cycles 1010: 14 cycles 1011: 18 cycles 1100: 24 cycles 1101: Reserved (setting prohibited) 1110: Reserved (setting prohibited) 1111: Reserved (setting prohibited)
6	WM	0	R/W	External Wait Mask Specification Specifies whether or not the external wait input is valid. The specification by this bit is valid even when the number of access wait cycle is 0. 0: External wait input is valid 1: External wait input is ignored
5 to 2	—	All 0	R	Reserved These bits are always read as 0. The write value should always be 0.
1, 0	HW[1:0]	00	R/W	Delay Cycles from $\overline{RD}$, $\overline{WEn}$ Negation to Address, $\overline{CSn}$ Negation Specify the number of delay cycles from $\overline{RD}$ and $\overline{WEn}$ negation to address and $\overline{CSn}$ negation. 00: 0.5 cycles 01: 1.5 cycles 10: 2.5 cycles 11: 3.5 cycles

chanhvinh.com

- CS2WCR, CS3WCR

Bit:	31	30	29	28	27	26	25	24	23	22	21	20	19	18	17	16
	-	-	-	-	-	-	-	-	-	-	-	BAS	-	-	-	-
Initial value:	0	0	0	0	0	0	0	0	0	0	0	0	0	0	0	0
R/W:	R	R	R	R	R	R	R	R	R	R	R	R/W	R	R	R	R

Bit:	15	14	13	12	11	10	9	8	7	6	5	4	3	2	1	0
	-	-	-	-	-	WR[3:0]				WM	-	-	-	-	-	-
Initial value:	0	0	0	0	0	1	0	1	0	0	0	0	0	0	0	0
R/W:	R	R	R	R	R	R/W	R/W	R/W	R/W	R/W	R	R	R	R	R	R

Bit	Bit Name	Initial Value	R/W	Description
31 to 21	—	All 0	R	Reserved These bits are always read as 0. The write value should always be 0.
20	BAS	0	R/W	SRAM with Byte Selection Byte Access Select Specifies the $\overline{WEn}$ and RD/$\overline{WR}$ signal timing when the SRAM interface with byte selection is used. 0: Asserts the $\overline{WEn}$ signal at the read timing and asserts the RD/$\overline{WR}$ signal during the write access cycle. 1: Asserts the $\overline{WEn}$ signal during the read access cycle and asserts the RD/$\overline{WR}$ signal at the write timing.
19 to 11	—	All 0	R	Reserved These bits are always read as 0. The write value should always be 0.

chanhvinh.com

Bit	Bit Name	Initial Value	R/W	Description
10 to 7	WR[3:0]	1010	R/W	Number of Access Wait Cycles Specify the number of cycles that are necessary for read/write access. 0000: No cycle 0001: 1 cycle 0010: 2 cycles 0011: 3 cycles 0100: 4 cycles 0101: 5 cycles 0110: 6 cycles 0111: 8 cycles 1000: 10 cycles 1001: 12 cycles 1010: 14 cycles 1011: 18 cycles 1100: 24 cycles 1101: Reserved (setting prohibited) 1110: Reserved (setting prohibited) 1111: Reserved (setting prohibited)
6	WM	0	R/W	External Wait Mask Specification Specifies whether or not the external wait input is valid. The specification by this bit is valid even when the number of access wait cycle is 0. 0: External wait input is valid 1: External wait input is ignored
5 to 0	—	All 0	R	Reserved These bits are always read as 0. The write value should always be 0.

chanhvinh.com

- CS4WCR

Bit:	31	30	29	28	27	26	25	24	23	22	21	20	19	18	17	16
	-	-	-	-	-	-	-	-	-	-	-	BAS	-	WW[2:0]		
Initial value:	0	0	0	0	0	0	0	0	0	0	0	0	0	0	0	0
R/W:	R	R	R	R	R	R	R	R	R	R	R	R/W	R	R/W	R/W	R/W

Bit:	15	14	13	12	11	10	9	8	7	6	5	4	3	2	1	0
	-	-	-	SW[1:0]		WR[3:0]				WM	-	-	-	-	HW[1:0]	
Initial value:	0	0	0	0	0	1	0	1	0	0	0	0	0	0	0	0
R/W:	R	R	R	R/W	R/W	R/W	R/W	R/W	R/W	R/W	R	R	R	R	R/W	R/W

Bit	Bit Name	Initial Value	R/W	Description
31 to 21	—	All 0	R	Reserved These bits are always read as 0. The write value should always be 0.
20	BAS	0	R/W	SRAM with Byte Selection Byte Access Select Specifies the $\overline{WEn}$ and RD/$\overline{WR}$ signal timing when the SRAM interface with byte selection is used. 0: Asserts the $\overline{WEn}$ signal at the read timing and asserts the RD/$\overline{WR}$ signal during the write access cycle. 1: Asserts the $\overline{WEn}$ signal during the read access cycle and asserts the RD/$\overline{WR}$ signal at the write timing.
19	—	0	R	Reserved This bit is always read as 0. The write value should always be 0.

chanhvinh.com

Bit	Bit Name	Initial Value	R/W	Description
18 to 16	WW[2:0]	000	R/W	Number of Write Access Wait Cycles Specify the number of cycles that are necessary for write access. 000: The same cycles as WR[3:0] setting (number of read access wait cycles) 001: No cycle 010: 1 cycle 011: 2 cycles 100: 3 cycles 101: 4 cycles 110: 5 cycles 111: 6 cycles
15 to 13	—	All 0	R	Reserved These bits are always read as 0. The write value should always be 0.
12, 11	SW[1:0]	00	R/W	Number of Delay Cycles from Address, $\overline{CS4}$ Assertion to $\overline{RD}$, $\overline{WE}$ Assertion Specify the number of delay cycles from address and $\overline{CS4}$ assertion to $\overline{RD}$ and $\overline{WE}$ assertion. 00: 0.5 cycles 01: 1.5 cycles 10: 2.5 cycles 11: 3.5 cycles

chanhvinh.com

Bit	Bit Name	Initial Value	R/W	Description
10 to 7	WR[3:0]	1010	R/W	Number of Read Access Wait Cycles Specify the number of cycles that are necessary for read access. 0000: No cycle 0001: 1 cycle 0010: 2 cycles 0011: 3 cycles 0100: 4 cycles 0101: 5 cycles 0110: 6 cycles 0111: 8 cycles 1000: 10 cycles 1001: 12 cycles 1010: 14 cycles 1011: 18 cycles 1100: 24 cycles 1101: Reserved (setting prohibited) 1110: Reserved (setting prohibited) 1111: Reserved (setting prohibited)
6	WM	0	R/W	External Wait Mask Specification Specifies whether or not the external wait input is valid. The specification by this bit is valid even when the number of access wait cycle is 0. 0: External wait input is valid 1: External wait input is ignored
5 to 2	—	All 0	R	Reserved These bits are always read as 0. The write value should always be 0.
1, 0	HW[1:0]	00	R/W	Delay Cycles from $\overline{RD}$, $\overline{WEn}$ Negation to Address, $\overline{CS4}$ Negation Specify the number of delay cycles from $\overline{RD}$ and $\overline{WEn}$ negation to address and $\overline{CS4}$ negation. 00: 0.5 cycles 01: 1.5 cycles 10: 2.5 cycles 11: 3.5 cycles

chanhvinh.com

- CS5WCR

Bit:	31	30	29	28	27	26	25	24	23	22	21	20	19	18	17	16
	-	-	-	-	-	-	-	-	-	-	SZSEL	MPXW/ BAS	-	WW[2:0]		
Initial value:	0	0	0	0	0	0	0	0	0	0	0	0	0	0	0	0
R/W:	R	R	R	R	R	R	R	R	R	R	R/W	R/W	R	R/W	R/W	R/W

Bit:	15	14	13	12	11	10	9	8	7	6	5	4	3	2	1	0
	-	-	-	SW[1:0]		WR[3:0]				WM	-	-	-	-	HW[1:0]	
Initial value:	0	0	0	0	0	1	0	1	0	0	0	0	0	0	0	0
R/W:	R	R	R	R/W	R/W	R/W	R/W	R/W	R/W	R/W	R	R	R	R	R/W	R/W

Bit	Bit Name	Initial Value	R/W	Description
31 to 22	—	All 0	R	Reserved These bits are always read as 0. The write value should always be 0.
21	SZSEL	0	R/W	MPX-I/O Interface Bus Width Specification Specifies an address to select the bus width when the BSZ[1:0] of CS5BCR are specified as 11. This bit is valid only when area 5 is specified as MPX-I/O. 0: Selects the bus width by address A14 1: Selects the bus width by address A21 The relationship between the SZSEL bit and bus width selected by A14 or A21 are summarized below.
20	MPXW	0	R/W	MPX-I/O Interface Address Wait This bit setting is valid only when area 5 is specified as MPX-I/O. Specifies the address cycle insertion wait for MPX-I/O interface. 0: Inserts no wait cycle 1: Inserts 1 wait cycle

SZSEL	A14	A21	Bus Width
0	0	Not affected	8 bits
0	1	Not affected	16 bits
1	Not affected	0	8 bits
1	Not affected	1	16 bits

chanhvinh.com

Bit	Bit Name	Initial Value	R/W	Description
20	BAS	0	R/W	SRAM with Byte Selection Byte Access Select This bit setting is valid only when area 5 is specified as SRAM with byte selection. Specifies the $\overline{WEn}$ and RD/$\overline{WR}$ signal timing when the SRAM interface with byte selection is used. 0: Asserts the $\overline{WEn}$ signal at the read timing and asserts the RD/$\overline{WR}$ signal during the write access cycle. 1: Asserts the $\overline{WEn}$ signal during the read access cycle and asserts the RD/$\overline{WR}$ signal at the write timing.
19	—	0	R	Reserved This bit is always read as 0. The write value should always be 0.
18 to 16	WW[2:0]	000	R/W	Number of Write Access Wait Cycles Specify the number of cycles that are necessary for write access. 000: The same cycles as WR[3:0] setting (number of read access wait cycles) 001: No cycle 010: 1 cycle 011: 2 cycles 100: 3 cycles 101: 4 cycles 110: 5 cycles 111: 6 cycles
15 to 13	—	All 0	R	Reserved These bits are always read as 0. The write value should always be 0.
12, 11	SW[1:0]	00	R/W	Number of Delay Cycles from Address, $\overline{CS5}$ Assertion to $\overline{RD}$, $\overline{WE}$ Assertion These bits specify the number of delay cycles from address and $\overline{CS5}$ assertion to $\overline{RD}$ and $\overline{WEn}$ assertion when area 5 is specified as normal space or SRAM with byte selection. They specify the number of delay cycles from address cycle (Ta3) to $\overline{RD}$ and $\overline{WEn}$ assertion when area 5 is specified as MPX-I/O. 00: 0.5 cycles 01: 1.5 cycles 10: 2.5 cycles 11: 3.5 cycles

chanhvinh.com

Bit	Bit Name	Initial Value	R/W	Description
10 to 7	WR[3:0]	1010	R/W	Number of Read Access Wait Cycles Specify the number of cycles that are necessary for read access. 0000: No cycle 0001: 1 cycle 0010: 2 cycles 0011: 3 cycles 0100: 4 cycles 0101: 5 cycles 0110: 6 cycles 0111: 8 cycles 1000: 10 cycles 1001: 12 cycles 1010: 14 cycles 1011: 18 cycles 1100: 24 cycles 1101: Reserved (setting prohibited) 1110: Reserved (setting prohibited) 1111: Reserved (setting prohibited)
6	WM	0	R/W	External Wait Mask Specification Specifies whether or not the external wait input is valid. The specification by this bit is valid even when the number of access wait cycle is 0. 0: External wait input is valid 1: External wait input is ignored
5 to 2	—	All 0	R	Reserved These bits are always read as 0. The write value should always be 0.
1, 0	HW[1:0]	00	R/W	Delay Cycles from $\overline{RD}$, $\overline{WEn}$ Negation to Address, $\overline{CS5}$ Negation These bits specify the number of delay cycles from $\overline{RD}$ and $\overline{WEn}$ negation to address and $\overline{CS5}$ negation when area 5 is specified as normal space or SRAM with byte selection. They specify the number of delay cycles from $\overline{RD}$ and $\overline{WEn}$ negation to $\overline{CS5}$ negation when area 5 is specified as MPX-I/O. 00: 0.5 cycles 01: 1.5 cycles 10: 2.5 cycles 11: 3.5 cycles

chanhvinh.com

(2) Burst ROM (Clocked Asynchronous)

- CS0WCR

Bit:	31	30	29	28	27	26	25	24	23	22	21	20	19	18	17	16
	-	-	-	-	-	-	-	-	-	-	BST[1:0]		-	-	BW[1:0]	
Initial value:	0	0	0	0	0	0	0	0	0	0	0	0	0	0	0	0
R/W:	R	R	R	R	R	R	R	R	R	R	R/W	R/W	R	R	R/W	R/W

Bit:	15	14	13	12	11	10	9	8	7	6	5	4	3	2	1	0
	-	-	-	-	-	W[3:0]				WM	-	-	-	-	-	-
Initial value:	0	0	0	0	0	1	0	1	0	0	0	0	0	0	0	0
R/W:	R	R	R	R	R	R/W	R/W	R/W	R/W	R/W	R	R	R	R	R	R

Bit	Bit Name	Initial Value	R/W	Description
31 to 22	—	All 0	R	Reserved These bits are always read as 0. The write value should always be 0.
21, 20	BST[1:0]	00	R/W	Burst Count Specification Specify the burst count for 16-byte access. These bits must not be set to B'11, because B'11 setting is reserved.
19, 18	—	All 0	R	Reserved These bits are always read as 0. The write value should always be 0.

Bus Width	BST[1:0]	Burst count
8 bits	00	16 burst × one time
	01	4 burst × four times
16 bits	00	8 burst × one time
	01	2 burst × four times
	10	4-4 or 2-4-2 burst
32 bits	xx	4 burst × one time

chanhvinh.com

Bit	Bit Name	Initial Value	R/W	Description
17, 16	BW[1:0]	00	R/W	Number of Burst Wait Cycles Specify the number of wait cycles to be inserted between the second or subsequent access cycles in burst access. 00: No cycle 01: 1 cycle 10: 2 cycles 11: 3 cycles
15 to 11	—	All 0	R	Reserved These bits are always read as 0. The write value should always be 0.
10 to 7	W[3:0]	1010	R/W	Number of Access Wait Cycles Specify the number of wait cycles to be inserted in the first access cycle. 0000: No cycle 0001: 1 cycle 0010: 2 cycles 0011: 3 cycles 0100: 4 cycles 0101: 5 cycles 0110: 6 cycles 0111: 8 cycles 1000: 10 cycles 1001: 12 cycles 1010: 14 cycles 1011: 18 cycles 1100: 24 cycles 1101: Reserved (setting prohibited) 1110: Reserved (setting prohibited) 1111: Reserved (setting prohibited)

chanhvinh.com

Bit	Bit Name	Initial Value	R/W	Description
6	WM	0	R/W	External Wait Mask Specification Specifies whether or not the external wait input is valid. The specification by this bit is valid even when the number of access wait cycle is 0. 0: External wait input is valid 1: External wait input is ignored
5 to 0	—	All 0	R	Reserved These bits are always read as 0. The write value should always be 0.

chanhvinh.com

- CS4WCR

Bit:	31	30	29	28	27	26	25	24	23	22	21	20	19	18	17	16
	-	-	-	-	-	-	-	-	-	-	BST[1:0]		-	-	BW[1:0]	
Initial value:	0	0	0	0	0	0	0	0	0	0	0	0	0	0	0	0
R/W:	R	R	R	R	R	R	R	R	R	R	R/W	R/W	R	R	R/W	R/W

Bit:	15	14	13	12	11	10	9	8	7	6	5	4	3	2	1	0
	-	-	-	SW[1:0]		W[3:0]				WM	-	-	-	-	HW[1:0]	
Initial value:	0	0	0	0	0	1	0	1	0	0	0	0	0	0	0	0
R/W:	R	R	R	R/W	R/W	R/W	R/W	R/W	R/W	R/W	R	R	R	R	R/W	R/W

Bit	Bit Name	Initial Value	R/W	Description
31 to 22	—	All 0	R	Reserved These bits are always read as 0. The write value should always be 0.
21, 20	BST[1:0]	00	R/W	Burst Count Specification Specify the burst count for 16-byte access. These bits must not be set to B'11, because B'11 setting is reserved.
19, 18	—	All 0	R	Reserved These bits are always read as 0. The write value should always be 0.
17, 16	BW[1:0]	00	R/W	Number of Burst Wait Cycles Specify the number of wait cycles to be inserted between the second or subsequent access cycles in burst access. 00: No cycle 01: 1 cycle 10: 2 cycles 11: 3 cycles

Bus Width	BST[1:0]	Burst count
8 bits	00	16 burst × one time
	01	4 burst × four times
16 bits	00	8 burst × one time
	01	2 burst × four times
	10	4-4 or 2-4-2 burst
32 bits	xx	4 burst × one time

chanhvinh.com

Bit	Bit Name	Initial Value	R/W	Description
15 to 13	—	All 0	R	Reserved These bits are always read as 0. The write value should always be 0.
12, 11	SW[1:0]	00	R/W	Number of Delay Cycles from Address, $\overline{CS4}$ Assertion to $\overline{RD}$, $\overline{WEn}$ Assertion Specify the number of delay cycles from address and $\overline{CS4}$ assertion to $\overline{RD}$ and $\overline{WEn}$ assertion. 00: 0.5 cycles 01: 1.5 cycles 10: 2.5 cycles 11: 3.5 cycles
10 to 7	W[3:0]	1010	R/W	Number of Access Wait Cycles Specify the number of wait cycles to be inserted in the first access cycle. 0000: No cycle 0001: 1 cycle 0010: 2 cycles 0011: 3 cycles 0100: 4 cycles 0101: 5 cycles 0110: 6 cycles 0111: 8 cycles 1000: 10 cycles 1001: 12 cycles 1010: 14 cycles 1011: 18 cycles 1100: 24 cycles 1101: Reserved (setting prohibited) 1110: Reserved (setting prohibited) 1111: Reserved (setting prohibited)
6	WM	0	R/W	External Wait Mask Specification Specifies whether or not the external wait input is valid. The specification by this bit is valid even when the number of access wait cycle is 0. 0: External wait input is valid 1: External wait input is ignored

chanhvinh.com

Bit	Bit Name	Initial Value	R/W	Description
5 to 2	—	All 0	R	Reserved These bits are always read as 0. The write value should always be 0.
1, 0	HW[1:0]	00	R/W	Delay Cycles from $\overline{RD}$, $\overline{WEn}$ Negation to Address, $\overline{CS4}$ Negation Specify the number of delay cycles from $\overline{RD}$ and $\overline{WEn}$ negation to address and $\overline{CS4}$ negation. 00: 0.5 cycles 01: 1.5 cycles 10: 2.5 cycles 11: 3.5 cycles

(3) SDRAM*

- CS2WCR

Bit:	31	30	29	28	27	26	25	24	23	22	21	20	19	18	17	16
	-	-	-	-	-	-	-	-	-	-	-	-	-	-	-	-
Initial value:	0	0	0	0	0	0	0	0	0	0	0	0	0	0	0	0
R/W:	R	R	R	R	R	R	R	R	R	R	R	R	R	R	R	R

Bit:	15	14	13	12	11	10	9	8	7	6	5	4	3	2	1	0
	-	-	-	-	-	-	-	A2CL[1:0]		-	-	-	-	-	-	-
Initial value:	0	0	0	0	0	1	0	1	0	0	0	0	0	0	0	0
R/W:	R	R	R	R	R	R	R	R/W	R/W	R	R	R	R	R	R	R

Bit	Bit Name	Initial Value	R/W	Description
31 to 11	—	All 0	R	Reserved These bits are always read as 0. The write value should always be 0.
10	—	1	R	Reserved This bit is always read as 1. The write value should always be 1.
9	—	0	R	Reserved This bit is always read as 0. The write value should always be 0.

chanhvinh.com

Bit	Bit Name	Initial Value	R/W	Description
8, 7	A2CL[1:0]	10	R/W	CAS Latency for Area 2 Specify the CAS latency for area 2. 00: 1 cycle 01: 2 cycles 10: 3 cycles 11: 4 cycles
6 to 0	—	All 0	R	Reserved These bits are always read as 0. The write value should always be 0.

Note: * If only one area is connected to the SDRAM, specify area 3. In this case, specify area 2 as normal space or SRAM with byte selection.

- CS3WCR

Bit:	31	30	29	28	27	26	25	24	23	22	21	20	19	18	17	16
	-	-	-	-	-	-	-	-	-	-	-	-	-	-	-	-
Initial value:	0	0	0	0	0	0	0	0	0	0	0	0	0	0	0	0
R/W:	R	R	R	R	R	R	R	R	R	R	R	R	R	R	R	R

Bit:	15	14	13	12	11	10	9	8	7	6	5	4	3	2	1	0
	-	WTRP[1:0]*		-	WTRCD[1:0]*		-	A3CL[1:0]		-	-	TRWL[1:0]*		-	WTRC[1:0]*	
Initial value:	0	0	0	0	0	1	0	1	0	0	0	0	0	0	0	0
R/W:	R	R/W	R/W	R	R/W	R/W	R	R/W	R/W	R	R	R/W	R/W	R	R/W	R/W

Note: * If both areas 2 and 3 are specified as SDRAM, WTRP[1:0], WTRCD[1:0], TRWL[1:0], and WTRC[1:0] bit settings are used in both areas in common.

Bit	Bit Name	Initial Value	R/W	Description
31 to 15	—	All 0	R	Reserved These bits are always read as 0. The write value should always be 0.

chanhvinh.com

Bit	Bit Name	Initial Value	R/W	Description
14, 13	WTRP[1:0]*	00	R/W	Number of Auto-Precharge Completion Wait Cycles Specify the number of minimum precharge completion wait cycles as shown below. • From the start of auto-precharge and issuing of ACTV command for the same bank • From issuing of the PRE/PALL command to issuing of the ACTV command for the same bank • Till entering the power-down mode or deep power-down mode • From the issuing of PALL command to issuing REF command in auto refresh mode • From the issuing of PALL command to issuing SELF command in self refresh mode The setting for areas 2 and 3 is common. 00: No cycle 01: 1 cycle 10: 2 cycles 11: 3 cycles
12	—	0	R	Reserved This bit is always read as 0. The write value should always be 0.
11, 10	WTRCD[1:0]*	01	R/W	Number of Wait Cycles between ACTV Command and READ(A)/WRIT(A) Command Specify the minimum number of wait cycles from issuing the ACTV command to issuing the READ(A)/WRIT(A) command. The setting for areas 2 and 3 is common. 00: No cycle 01: 1 cycle 10: 2 cycles 11: 3 cycles
9	—	0	R	Reserved This bit is always read as 0. The write value should always be 0.

chanhvinh.com

Bit	Bit Name	Initial Value	R/W	Description
8, 7	A3CL[1:0]	10	R/W	CAS Latency for Area 3 Specify the CAS latency for area 3. 00: 1 cycle 01: 2 cycles 10: 3 cycles 11: 4 cycles
6, 5	—	All 0	R	Reserved These bits are always read as 0. The write value should always be 0.
4, 3	TRWL[1:0]*	00	R/W	Number of Auto-Precharge Startup Wait Cycles Specify the number of minimum auto-precharge startup wait cycles as shown below. • Cycle number from the issuance of the WRITA command by this LSI until the completion of auto-precharge in the SDRAM. Equivalent to the cycle number from the issuance of the WRITA command until the issuance of the ACTV command. Confirm that how many cycles are required between the WRITA command receive in the SDRAM and the auto-precharge activation, referring to each SDRAM data sheet. And set the cycle number so as not to exceed the cycle number specified by this bit. • Cycle number from the issuance of the WRIT command until the issuance of the PRE command. This is the case when accessing another low address in the same bank in bank active mode. The setting for areas 2 and 3 is common. 00: No cycle 01: 1 cycle 10: 2 cycles 11: 3 cycles
2	—	0	R	Reserved This bit is always read as 0. The write value should always be 0.

chanhvinh.com

Bit	Bit Name	Initial Value	R/W	Description
1, 0	WTRC[1:0]*	00	R/W	Number of Idle Cycles from REF Command/Self-Refresh Release to ACTV/REF/MRS Command Specify the number of minimum idle cycles in the periods shown below. • From the issuance of the REF command until the issuance of the ACTV/REF/MRS command • From releasing self-refresh until the issuance of the ACTV/REF/MRS command. The setting for areas 2 and 3 is common. 00: 2 cycles 01: 3 cycles 10: 5 cycles 11: 8 cycles

Note: * If both areas 2 and 3 are specified as SDRAM, WTRP[1:0], WTRCD[1:0], TRWL[1:0], and WTRC[1:0] bit settings are used in both areas in common.
If only one area is connected to the SDRAM, specify area 3. In this case, specify area 2 as normal space or SRAM with byte selection.

chanhvinh.com

(4) PCMCIA

- CS5WCR

Bit:	31	30	29	28	27	26	25	24	23	22	21	20	19	18	17	16
	-	-	-	-	-	-	-	-	-	-	SA[1:0]		-	-	-	-
Initial value:	0	0	0	0	0	0	0	0	0	0	0	0	0	0	0	0
R/W:	R	R	R	R	R	R	R	R	R	R	R/W	R/W	R	R	R	R

Bit:	15	14	13	12	11	10	9	8	7	6	5	4	3	2	1	0
	-	TED[3:0]				PCW[3:0]				WM	-	-	TEH[3:0]			
Initial value:	0	0	0	0	0	1	0	1	0	0	0	0	0	0	0	0
R/W:	R	R/W	R/W	R/W	R/W	R/W	R/W	R/W	R/W	R	R	R	R/W	R/W	R/W	R/W

Bit	Bit Name	Initial Value	R/W	Description
31 to 22	—	All 0	R	Reserved These bits are always read as 0. The write value should always be 0.
21, 20	SA[1:0]	00	R/W	Space Attribute Specification Select memory card interface or I/O card interface when PCMCIA interface is selected. SA1: 0: Selects memory card interface for the space for A25 = 1. 1: Selects I/O card interface for the space for A25 = 1. SA0: 0: Selects memory card interface for the space for A25 = 0. 1: Selects I/O card interface for the space for A25 = 0.
19 to 15	—	All 0	R	Reserved These bits are always read as 0. The write value should always be 0.

chanhvinh.com

Bit	Bit Name	Initial Value	R/W	Description
14 to 11	TED[3:0]	0000	R/W	Number of Delay Cycles from Address Output to $\overline{RD}$/$\overline{WE}$ Assertion Specify the number of delay cycles from address output to $\overline{RD}$/$\overline{WE}$ assertion for the memory card or to $\overline{ICIORD}$/$\overline{ICIOWR}$ assertion for the I/O card in PCMCIA interface. 0000: 0.5 cycle 0001: 1.5 cycles 0010: 2.5 cycles 0011: 3.5 cycles 0100: 4.5 cycles 0101: 5.5 cycles 0110: 6.5 cycles 0111: 7.5 cycles 1000: 8.5 cycles 1001: 9.5 cycles 1010: 10.5 cycles 1011: 11.5 cycles 1100: 12.5 cycles 1101: 13.5 cycles 1110: 14.5 cycles 1111: 15.5 cycles

chanhvinh.com

Bit	Bit Name	Initial Value	R/W	Description
10 to 7	PCW[3:0]	1010	R/W	Number of Access Wait Cycles Specify the number of wait cycles to be inserted. 0000: 3 cycles 0001: 6 cycles 0010: 9 cycles 0011: 12 cycles 0100: 15 cycles 0101: 18 cycles 0110: 22 cycles 0111: 26 cycles 1000: 30 cycles 1001: 33 cycles 1010: 36 cycles 1011: 38 cycles 1100: 52 cycles 1101: 60 cycles 1110: 64 cycles 1111: 80 cycles
6	WM	0	R/W	External Wait Mask Specification Specifies whether or not the external wait input is valid. The specification by this bit is valid even when the number of access wait cycles is 0. 0: External wait input is valid 1: External wait input is ignored
5, 4	—	All 0	R	Reserved These bits are always read as 0. The write value should always be 0.

chanhvinh.com

Bit	Bit Name	Initial Value	R/W	Description
3 to 0	TEH[3:0]	0000	R/W	Delay Cycles from $\overline{RD}$/$\overline{WE}$ Negation to Address Specify the number of address hold cycles from $\overline{RD}$/$\overline{WE}$ negation for the memory card or those from $\overline{ICIORD}$/$\overline{ICIOWR}$ negation for the I/O card in PCMCIA interface. 0000: 0.5 cycle 0001: 1.5 cycles 0010: 2.5 cycles 0011: 3.5 cycles 0100: 4.5 cycles 0101: 5.5 cycles 0110: 6.5 cycles 0111: 7.5 cycles 1000: 8.5 cycles 1001: 9.5 cycles 1010: 10.5 cycles 1011: 11.5 cycles 1100: 12.5 cycles 1101: 13.5 cycles 1110: 14.5 cycles 1111: 15.5 cycles

chanhvinh.com

(5) Burst ROM (Clocked Synchronous)

- CS0WCR

Bit:	31	30	29	28	27	26	25	24	23	22	21	20	19	18	17	16
	-	-	-	-	-	-	-	-	-	-	-	-	-	-	BW[1:0]	
Initial value:	0	0	0	0	0	0	0	0	0	0	0	0	0	0	0	0
R/W:	R	R	R	R	R	R	R	R	R	R	R	R	R	R	R/W	R/W

Bit:	15	14	13	12	11	10	9	8	7	6	5	4	3	2	1	0
	-	-	-	-	-	W[3:0]				WM	-	-	-	-	-	-
Initial value:	0	0	0	0	0	1	0	1	0	0	0	0	0	0	0	0
R/W:	R	R	R	R	R	R/W	R/W	R/W	R/W	R/W	R	R	R	R	R	R

Bit	Bit Name	Initial Value	R/W	Description
31 to 18	—	All 0	R	Reserved These bits are always read as 0. The write value should always be 0.
17, 16	BW[1:0]	00	R/W	Number of Burst Wait Cycles Specify the number of wait cycles to be inserted between the second or subsequent access cycles in burst access. 00: No cycle 01: 1 cycle 10: 2 cycles 11: 3 cycles
15 to 11	—	All 0	R	Reserved These bits are always read as 0. The write value should always be 0.

chanhvinh.com

Bit	Bit Name	Initial Value	R/W	Description
10 to 7	W[3:0]	1010	R/W	Number of Access Wait Cycles Specify the number of wait cycles to be inserted in the first access cycle. 0000: No cycle 0001: 1 cycle 0010: 2 cycles 0011: 3 cycles 0100: 4 cycles 0101: 5 cycles 0110: 6 cycles 0111: 8 cycles 1000: 10 cycles 1001: 12 cycles 1010: 14 cycles 1011: 18 cycles 1100: 24 cycles 1101: Reserved (setting prohibited) 1110: Reserved (setting prohibited) 1111: Reserved (setting prohibited)
6	WM	0	R/W	External Wait Mask Specification Specifies whether or not the external wait input is valid. The specification by this bit is valid even when the number of access wait cycle is 0. 0: External wait input is valid 1: External wait input is ignored
5 to 0	—	All 0	R	Reserved These bits are always read as 0. The write value should always be 0.

chanhvinh.com

10.4.4 SDRAM Control Register (SDCR)

SDCR specifies the method to refresh and access SDRAM, and the types of SDRAMs to be connected.

Bit:	31	30	29	28	27	26	25	24	23	22	21	20	19	18	17	16
	-	-	-	-	-	-	-	-	-	-	-	A2ROW[1:0]		-	A2COL[1:0]	
Initial value:	0	0	0	0	0	0	0	0	0	0	0	0	0	0	0	0
R/W:	R	R	R	R	R	R	R	R	R	R	R	R/W	R/W	R	R/W	R/W

Bit:	15	14	13	12	11	10	9	8	7	6	5	4	3	2	1	0
	-	-	DEEP	-	RFSH	RMODE	PDOWN	BACTV	-	-	-	A3ROW[1:0]		-	A3COL[1:0]	
Initial value:	0	0	0	0	0	0	0	0	0	0	0	0	0	0	0	0
R/W:	R	R	R/W	R	R/W	R/W	R/W	R/W	R	R	R	R/W	R/W	R	R/W	R/W

Bit	Bit Name	Initial Value	R/W	Description
31 to 21	—	All 0	R	Reserved These bits are always read as 0. The write value should always be 0.
20, 19	A2ROW[1:0]	00	R/W	Number of Bits of Row Address for Area 2 Specify the number of bits of row address for area 2. 00: 11 bits 01: 12 bits 10: 13 bits 11: Reserved (setting prohibited)
18	—	0	R	Reserved This bit is always read as 0. The write value should always be 0.
17, 16	A2COL[1:0]	00	R/W	Number of Bits of Column Address for Area 2 Specify the number of bits of column address for area 2. 00: 8 bits 01: 9 bits 10: 10 bits 11: Reserved (setting prohibited)

chanhvinh.com

Bit	Bit Name	Initial Value	R/W	Description
15, 14	—	All 0	R	Reserved These bits are always read as 0. The write value should always be 0.
13	DEEP	0	R/W	Deep Power-Down Mode This bit is valid for low-power SDRAM. If the RFSH or RMODE bit is set to 1 while this bit is set to 1, the deep power-down entry command is issued and the low-power SDRAM enters the deep power-down mode. 0: Self-refresh mode 1: Deep power-down mode
12	—	0	R	Reserved This bit is always read as 0. The write value should always be 0.
11	RFSH	0	R/W	Refresh Control Specifies whether or not the refresh operation of the SDRAM is performed. 0: No refresh 1: Refresh
10	RMODE	0	R/W	Refresh Control Specifies whether to perform auto-refresh or self-refresh when the RFSH bit is 1. When the RFSH bit is 1 and this bit is 1, self-refresh starts immediately. When the RFSH bit is 1 and this bit is 0, auto-refresh starts according to the contents that are set in registers RTCSR, RTCNT, and RTCOR. 0: Auto-refresh is performed 1: Self-refresh is performed

chanhvinh.com

Bit	Bit Name	Initial Value	R/W	Description
9	PDOWN	0	R/W	Power-Down Mode Specifies whether the SDRAM will enter the power-down mode after the access to the SDRAM. With this bit being set to 1, after the SDRAM is accessed, the CKE signal is driven low and the SDRAM enters the power-down mode. 0: The SDRAM does not enter the power-down mode after being accessed. 1: The SDRAM enters the power-down mode after being accessed.
8	BACTV	0	R/W	Bank Active Mode Specifies to access whether in auto-precharge mode (using READA and WRITA commands) or in bank active mode (using READ and WRIT commands). 0: Auto-precharge mode (using READA and WRITA commands) 1: Bank active mode (using READ and WRIT commands) Note: Bank active mode can be set only for area 3. When both areas 2 and 3 are set to SDRAM, specify the auto-precharge mode.
7 to 5	—	All 0	R	Reserved These bits are always read as 0. The write value should always be 0.
4, 3	A3ROW[1:0]	00	R/W	Number of Bits of Row Address for Area 3 Specify the number of bits of the row address for area 3. 00: 11 bits 01: 12 bits 10: 13 bits 11: Reserved (setting prohibited)
2	—	0	R	Reserved This bit is always read as 0. The write value should always be 0.

chanhvinh.com

Bit	Bit Name	Initial Value	R/W	Description
1, 0	A3COL[1:0]	00	R/W	Number of Bits of Column Address for Area 3 Specify the number of bits of the column address for area 3. 00: 8 bits 01: 9 bits 10: 10 bits 11: Reserved (setting prohibited)

chanhvinh.com

10.4.5 Refresh Timer Control/Status Register (RTCSR)

RTCSR specifies various items about refresh for SDRAM.

When RTCSR is written, the upper 16 bits of the write data must be H'A55A to cancel write protection.

The phase of the clock for incrementing the count in the refresh timer counter (RTCNT) is adjusted only by a power-on reset. Note that there is an error in the time until the compare match flag is set for the first time after the timer is started with the CKS[2:0] bits being set to a value other than B'000.

Bit:	31	30	29	28	27	26	25	24	23	22	21	20	19	18	17	16
	-	-	-	-	-	-	-	-	-	-	-	-	-	-	-	-
Initial value:	0	0	0	0	0	0	0	0	0	0	0	0	0	0	0	0
R/W:	R	R	R	R	R	R	R	R	R	R	R	R	R	R	R	R

Bit:	15	14	13	12	11	10	9	8	7	6	5	4	3	2	1	0
	-	-	-	-	-	-	-	-	CMF	CMIE	CKS[2:0]			RRC[2:0]		
Initial value:	0	0	0	0	0	0	0	0	0	0	0	0	0	0	0	0
R/W:	R	R	R	R	R	R	R	R	R/W	R/W	R/W	R/W	R/W	R/W	R/W	R/W

Bit	Bit Name	Initial Value	R/W	Description
31 to 8	—	All 0	R	Reserved These bits are always read as 0.
7	CMF	0	R/W	Compare Match Flag Indicates that a compare match occurs between the refresh timer counter (RTCNT) and refresh time constant register (RTCOR). This bit is set or cleared in the following conditions. 0: Clearing condition: When 0 is written in CMF after reading out RTCSR during CMF = 1. 1: Setting condition: When the condition RTCNT = RTCOR is satisfied.
6	CMIE	0	R/W	Compare Match Interrupt Enable Enables or disables CMF interrupt requests when the CMF bit in RTCSR is set to 1. 0: Disables CMF interrupt requests. 1: Enables CMF interrupt requests.

chanhvinh.com

Bit	Bit Name	Initial Value	R/W	Description
5 to 3	CKS[2:0]	000	R/W	Clock Select Select the clock input to count-up the refresh timer counter (RTCNT). 000: Stop the counting-up 001: CKIOϕ/4 010: CKIOϕ/16 011: CKIOϕ/64 100: CKIOϕ/256 101: CKIOϕ/1024 110: CKIOϕ/2048 111: CKIOϕ/4096
2 to 0	RRC[2:0]	000	R/W	Refresh Count Specify the number of continuous refresh cycles, when the refresh request occurs after the coincidence of the values of the refresh timer counter (RTCNT) and the refresh time constant register (RTCOR). These bits can make the period of occurrence of refresh long. 000: 1 time 001: 2 times 010: 4 times 011: 6 times 100: 8 times 101: Reserved (setting prohibited) 110: Reserved (setting prohibited) 111: Reserved (setting prohibited)

chanhvinh.com

10.4.6 Refresh Timer Counter (RTCNT)

RTCNT is an 8-bit counter that increments using the clock selected by bits CKS[2:0] in RTCSR. When RTCNT matches RTCOR, RTCNT is cleared to 0. The value in RTCNT returns to 0 after counting up to 255. When the RTCNT is written, the upper 16 bits of the write data must be H'A55A to cancel write protection.

Bit:	31	30	29	28	27	26	25	24	23	22	21	20	19	18	17	16
	-	-	-	-	-	-	-	-	-	-	-	-	-	-	-	-
Initial value:	0	0	0	0	0	0	0	0	0	0	0	0	0	0	0	0
R/W:	R	R	R	R	R	R	R	R	R	R	R	R	R	R	R	R

Bit:	15	14	13	12	11	10	9	8	7	6	5	4	3	2	1	0
	-	-	-	-	-	-	-	-								
Initial value:	0	0	0	0	0	0	0	0	0	0	0	0	0	0	0	0
R/W:	R	R	R	R	R	R	R	R	R/W	R/W	R/W	R/W	R/W	R/W	R/W	R/W

Bit	Bit Name	Initial Value	R/W	Description
31 to 8	—	All 0	R	Reserved These bits are always read as 0.
7 to 0		All 0	R/W	8-Bit Counter

chanhvinh.com

10.4.7 Refresh Time Constant Register (RTCOR)

RTCOR is an 8-bit register. When RTCOR matches RTCNT, the CMF bit in RTCSR is set to 1 and RTCNT is cleared to 0.

When the RFSH bit in SDCR is 1, a memory refresh request is issued by this matching signal. This request is maintained until the refresh operation is performed. If the request is not processed when the next matching occurs, the previous request is ignored.

When the CMIE bit in RTCSR is set to 1, an interrupt request is issued by this matching signal. The request continues to be output until the CMF bit in RTCSR is cleared. Clearing the CMF bit only affects the interrupt request and does not clear the refresh request. Therefore, a combination of refresh request and interval timer interrupt can be specified so that the number of refresh requests are counted by using timer interrupts while refresh is performed periodically.

When RTCOR is written, the upper 16 bits of the write data must be H'A55A to cancel write protection.

Bit:	31	30	29	28	27	26	25	24	23	22	21	20	19	18	17	16
	-	-	-	-	-	-	-	-	-	-	-	-	-	-	-	-
Initial value:	0	0	0	0	0	0	0	0	0	0	0	0	0	0	0	0
R/W:	R	R	R	R	R	R	R	R	R	R	R	R	R	R	R	R

Bit:	15	14	13	12	11	10	9	8	7	6	5	4	3	2	1	0
	-	-	-	-	-	-	-	-								
Initial value:	0	0	0	0	0	0	0	0	0	0	0	0	0	0	0	0
R/W:	R	R	R	R	R	R	R	R	R/W	R/W	R/W	R/W	R/W	R/W	R/W	R/W

Bit	Bit Name	Initial Value	R/W	Description
31 to 8	—	All 0	R	Reserved These bits are always read as 0.
7 to 0		All 0	R/W	8-Bit Counter

chanhvinh.com

10.5 Operation

10.5.1 Endian/Access Size and Data Alignment

This LSI supports both big endian, in which the most significant byte (MSB) of data is that in the direction of the 0th address, and little endian, in which the least significant byte (LSB) is that in the direction of the 0th address. In the initial state after a power-on reset, all areas will be in big endian mode. Endian mode can be changed by setting the CSnBCR register as long as the target space is not being accessed.

Data bus width can be selected from 8 bits, 16 bits, and 32 bits for the normal memory and SRAM with byte selection. Data bus width can be selected from 16 bits and 32 bits for SDRAM. Two data bus widths (8 bits and 16 bits) are available for the PCMCIA interface. For MPX-I/O, the data bus width is fixed to either 8 or 16 bits, or made selectable as 8 bits or 16 bits by one of the address lines.

Endian specification and data bus width varies depending on boot mode. For details, refer to section 10.3.2, Data Bus Width, Endian Specification, and Related Pin Setting for Each Area Depending on Boot Mode.

Data alignment is performed in accordance with the data bus width selected for the device. This also means that four read operations are required to read longword data from a byte-width device. In this LSI, data alignment and conversion of data length is performed automatically between the respective interfaces.

Tables 10.5 to 10.10 show the relationship between device data width and access unit. Note that the correspondence between addresses and strobe signals for the 32-bit bus width and 16-bit bus width depends on the endian setting. For example, with big endian and a 16-bit bus width, $\overline{WE1}$ corresponds to the 0th address, which is represented by $\overline{WE0}$ when little endian has been selected.

Since instructions are fetched with both 32- and 16-bit accesses, their alignment in the little-endian area is difficult. Execute instructions from big-endian area.

chanhvinh.com

Table 10.5 32-Bit External Device Access and Data Alignment in Big Endian

	Data Bus				Strobe Signals			
Operation	**D31 to D24**	**D23 to D16**	**D15 to D8**	**D7 to D0**	**$\overline{WE3}$, DQMUU**	**$\overline{WE2}$, DQMUL**	**$\overline{WE1}$, DQMLU**	**$\overline{WE0}$, DQMLL**
Byte access at address 0	Data 7 to 0	—	—	—	Assert	—	—	—
Byte access at address 1	—	Data 7 to 0	—	—	—	Assert	—	—
Byte access at address 2	—	—	Data 7 to 0	—	—	—	Assert	—
Byte access at address 3	—	—	—	Data 7 to 0	—	—	—	Assert
Word access at address 0	Data 15 to 8	Data 7 to 0	—	—	Assert	Assert	—	—
Word access at address 2	—	—	Data 15 to 8	Data 7 to 0	—	—	Assert	Assert
Longword access at address 0	Data 31 to 24	Data 23 to 16	Data 15 to 8	Data 7 to 0	Assert	Assert	Assert	Assert

chanhvinh.com

Table 10.6 16-Bit External Device Access and Data Alignment in Big Endian

Operation		Data Bus				Strobe Signals			
		D31 to D24	D23 to D16	D15 to D8	D7 to D0	$\overline{WE3}$, DQMUU	$\overline{WE2}$, DQMUL	$\overline{WE1}$, DQMLU	$\overline{WE0}$, DQMLL
Byte access at address 0		—	—	Data 7 to 0	—	—	—	Assert	—
Byte access at address 1		—	—	—	Data 7 to 0	—	—	—	Assert
Byte access at address 2		—	—	Data 7 to 0	—	—	—	Assert	—
Byte access at address 3		—	—	—	Data 7 to 0	—	—	—	Assert
Word access at address 0		—	—	Data 15 to 8	Data 7 to 0	—	—	Assert	Assert
Word access at address 2		—	—	Data 15 to 8	Data 7 to 0	—	—	Assert	Assert
Longword access at address 0	1st access at address 0	—	—	Data 31 to 24	Data 23 to 16	—	—	Assert	Assert
	2nd access at address 0	—	—	Data 31 to 24	Data 7 to 0	—	—	Assert	Assert

chanhvinh.com

Table 10.7 8-Bit External Device Access and Data Alignment in Big Endian

		Data Bus				Strobe Signals			
Operation		**D31 to D24**	**D23 to D16**	**D15 to D8**	**D7 to D0**	**$\overline{WE3}$, DQMUU**	**$\overline{WE2}$, DQMUL**	**$\overline{WE1}$, DQMLU**	**$\overline{WE0}$, DQMLL**
Byte access at address 0		—	—	—	Data 7 to 0	—	—	—	Assert
Byte access at address 1		—	—	—	Data 7 to 0	—	—	—	Assert
Byte access at address 2		—	—	—	Data 7 to 0	—	—	—	Assert
Byte access at address 3		—	—	—	Data 7 to 0	—	—	—	Assert
Word access at address 0	1st access at address 0	—	—	—	Data 15 to 8	—	—	—	Assert
	2nd access at address 1	—	—	—	Data 7 to 0	—	—	—	Assert
Word access at address 2	1st access at address 0	—	—	—	Data 15 to 8	—	—	—	Assert
	2nd access at address 1	—	—	—	Data 7 to 0	—	—	—	Assert
Longword access at address 0	1st access at address 0	—	—	—	Data 31 to 24	—	—	—	Assert
	2nd access at address 1	—	—	—	Data 23 to 16	—	—	—	Assert
	3rd access at address 2	—	—	—	Data 15 to 8	—	—	—	Assert
	4th access at address 3	—	—	—	Data 7 to 0	—	—	—	Assert

chanhvinh.com

Table 10.8 32-Bit External Device Access and Data Alignment in Little Endian

	Data Bus				Strobe Signals			
Operation	**D31 to D24**	**D23 to D16**	**D15 to D8**	**D7 to D0**	**$\overline{WE3}$, DQMUU**	**$\overline{WE2}$, DQMUL**	**$\overline{WE1}$, DQMLU**	**$\overline{WE0}$, DQMLL**
Byte access at address 0	—	—	—	Data 7 to 0	—	—	—	Assert
Byte access at address 1	—	—	Data 7 to 0	—	—	—	Assert	—
Byte access at address 2	—	Data 7 to 0	—	—	—	Assert	—	—
Byte access at address 3	Data 7 to 0	—	—	—	Assert	—	—	—
Word access at address 0	—	—	Data 15 to 8	Data 7 to 0	—	—	Assert	Assert
Word access at address 2	Data 15 to 8	Data 7 to 0	—	—	Assert	Assert	—	—
Longword access at address 0	Data 31 to 24	Data 23 to 16	Data 15 to 8	Data 7 to 0	Assert	Assert	Assert	Assert

chanhvinh.com

Table 10.9 16-Bit External Device Access and Data Alignment in Little Endian

		Data Bus				Strobe Signals			
Operation		**D31 to D24**	**D23 to D16**	**D15 to D8**	**D7 to D0**	**$\overline{WE3}$, DQMUU**	**$\overline{WE2}$, DQMUL**	**$\overline{WE1}$, DQMLU**	**$\overline{WE0}$, DQMLL**
Byte access at address 0		—	—	—	Data 7 to 0	—	—	—	Assert
Byte access at address 1		—	—	Data 7 to 0	—	—	—	Assert	—
Byte access at address 2		—	—	—	Data 7 to 0	—	—	—	Assert
Byte access at address 3		—	—	Data 7 to 0	—	—	—	Assert	—
Word access at address 0		—	—	Data 15 to 8	Data 7 to 0	—	—	Assert	Assert
Word access at address 2		—	—	Data 15 to 8	Data 7 to 0	—	—	Assert	Assert
Longword access at address 0	1st access at address 0	—	—	Data 15 to 8	Data 7 to 0	—	—	Assert	Assert
	2nd access at address 0	—	—	Data 31 to 24	Data 23 to 16	—	—	Assert	Assert

chanhvinh.com

Table 10.10 8-Bit External Device Access and Data Alignment in Little Endian

		Data Bus				Strobe Signals			
Operation		D31 to D24	D23 to D16	D15 to D8	D7 to D0	$\overline{WE3}$, DQMUU	$\overline{WE2}$, DQMUL	$\overline{WE1}$, DQMLU	$\overline{WE0}$, DQMLL
Byte access at address 0		—	—	—	Data 7 to 0	—	—	—	Assert
Byte access at address 1		—	—	—	Data 7 to 0	—	—	—	Assert
Byte access at address 2		—	—	—	Data 7 to 0	—	—	—	Assert
Byte access at address 3		—	—	—	Data 7 to 0	—	—	—	Assert
Word access at address 0	1st access at address 0	—	—	—	Data 7 to 0	—	—	—	Assert
	2nd access at address 1	—	—	—	Data 15 to 8	—	—	—	Assert
Word access at address 2	1st access at address 0	—	—	—	Data 7 to 0	—	—	—	Assert
	2nd access at address 1	—	—	—	Data 15 to 8	—	—	—	Assert
Longword access at address 0	1st access at address 0	—	—	—	Data 7 to 0	—	—	—	Assert
	2nd access at address 1	—	—	—	Data 15 to 8	—	—	—	Assert
	3rd access at address 2	—	—	—	Data 23 to 16	—	—	—	Assert
	4th access at address 3	—	—	—	Data 31 to 24	—	—	—	Assert

chanhvinh.com

10.5.2 Normal Space Interface

(1) Basic Timing

For access to a normal space, this LSI uses strobe signal output in consideration of the fact that mainly static RAM will be directly connected. When using SRAM with a byte-selection pin, see section 10.5.8, SRAM Interface with Byte Selection. Figure 10.2 shows the basic timings of normal space access. A no-wait normal access is completed in two cycles. The $\overline{BS}$ signal is asserted for one cycle to indicate the start of a bus cycle.

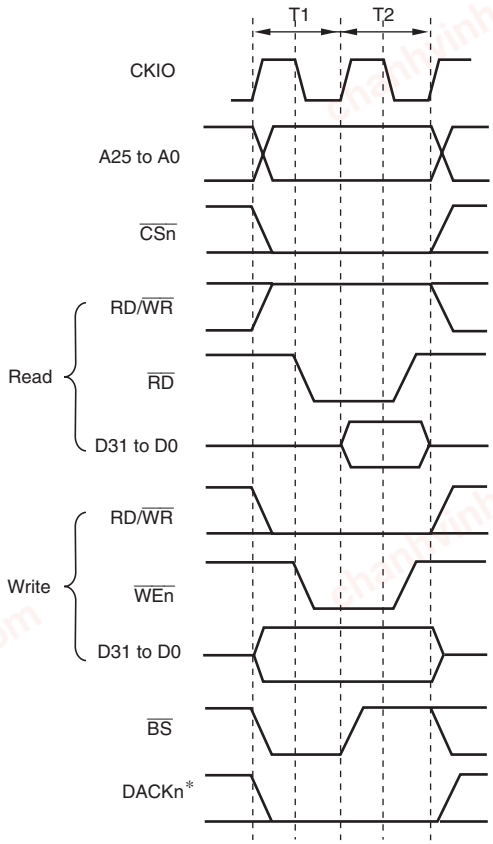

Note: * The waveform for DACKn is when active low is specified.

Figure 10.2 Normal Space Basic Access Timing (Access Wait 0)

There is no access size specification when reading. The correct access start address is output in the least significant bit of the address, but since there is no access size specification, 32 bits are always

chanhvinh.com

read in case of a 32-bit device. 16 bits are always read in case of a 16-bit device. When writing, only the $\overline{\text{WEn}}$ signal for the byte to be written is asserted.

It is necessary to output the data that has been read using $\overline{\text{RD}}$ when a buffer is established in the data bus. The RD/$\overline{\text{WR}}$ signal is in a read state (high output) when no access has been carried out. Therefore, care must be taken when controlling the external data buffer with this signal, to avoid output collision.

Figures 10.3 and 10.4 show the basic timings in continuous access to normal space. If the WM bit in CSnWCR is cleared to 0, a Tnop cycle is inserted after the CSn space access to evaluate the external wait (figure 10.3). If the WM bit in CSnWCR is set to 1, external waits are ignored and no Tnop cycle is inserted (figure 10.4).

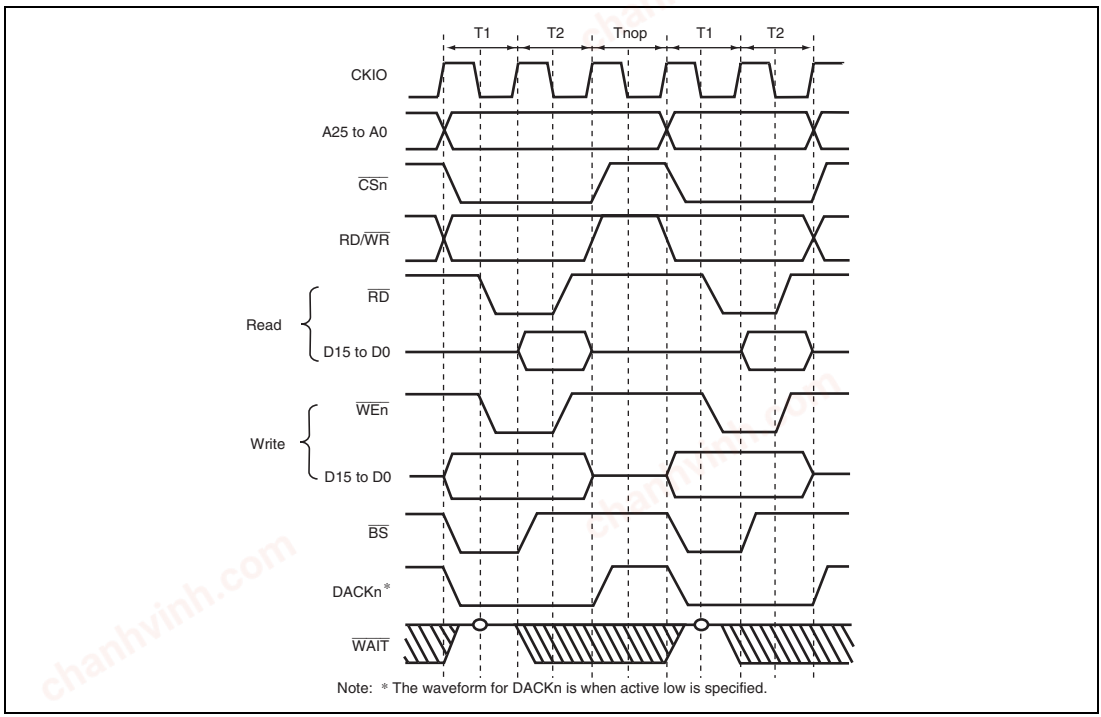

Figure 10.3 Continuous Access to Normal Space (1)
Bus Width = 16 Bits, Longword Access, CSnWCR.WM Bit = 0
(Access Wait = 0, Cycle Wait = 0)

chanhvinh.com

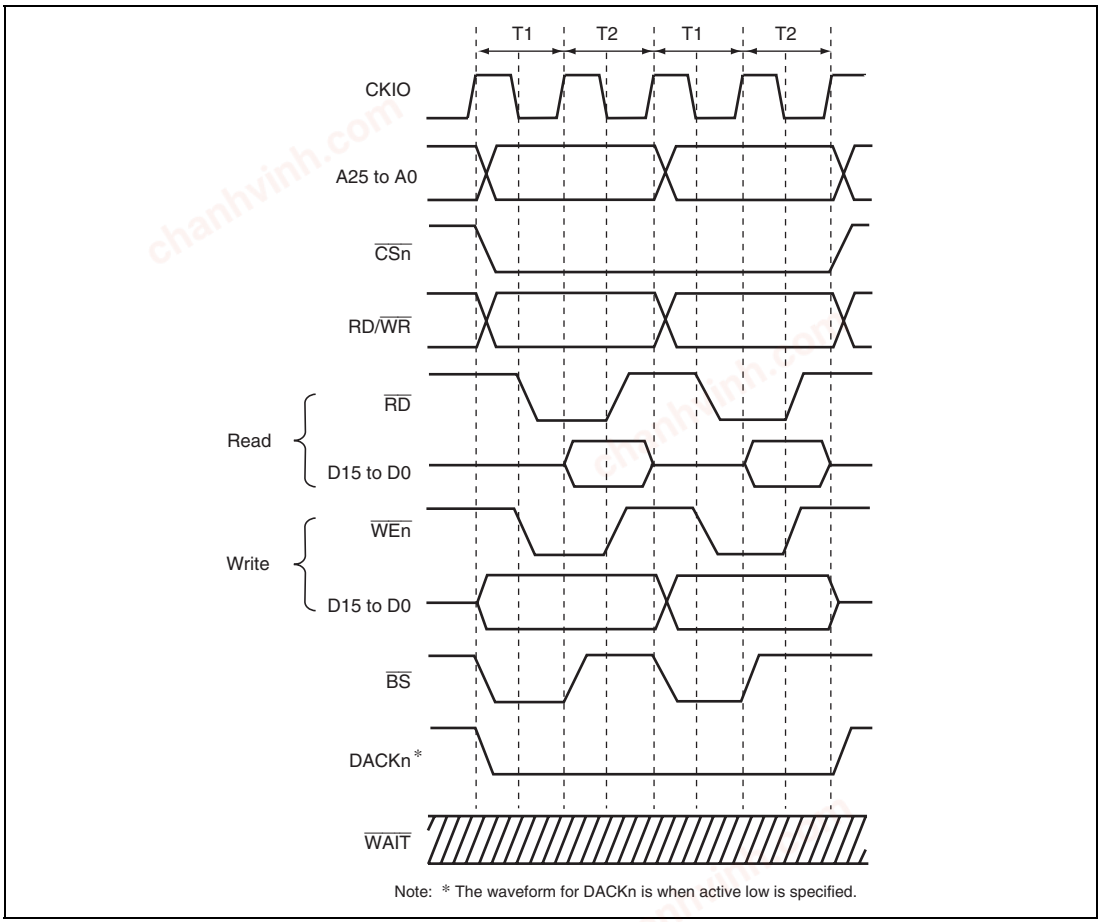

Figure 10.4 Continuous Access to Normal Space (2)
Bus Width = 16 Bits, Longword Access, CSnWCR.WM Bit = 1
(Access Wait = 0, Cycle Wait = 0)

chanhvinh.com

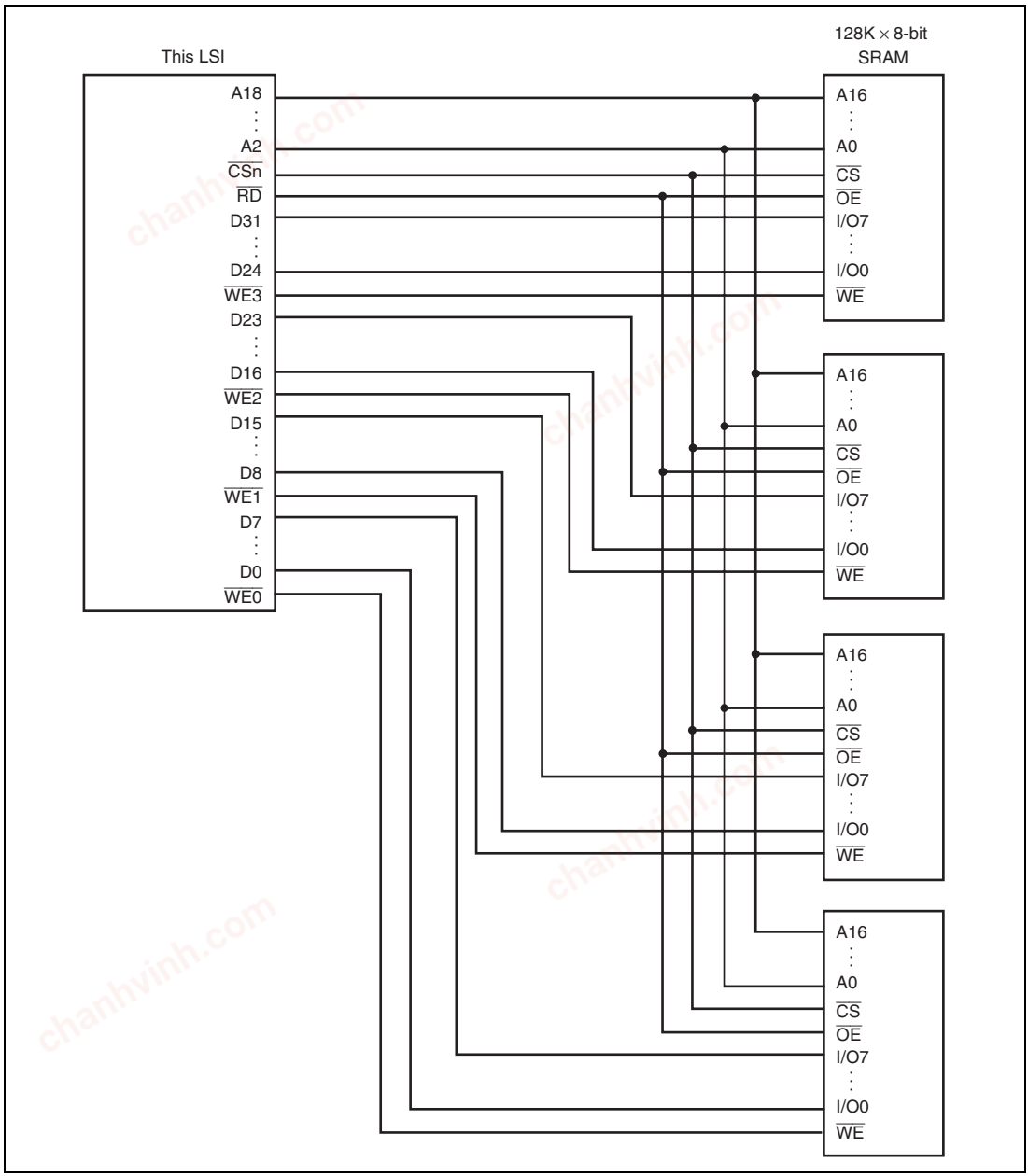

Figure 10.5 Example of 32-Bit Data-Width SRAM Connection

chanhvinh.com

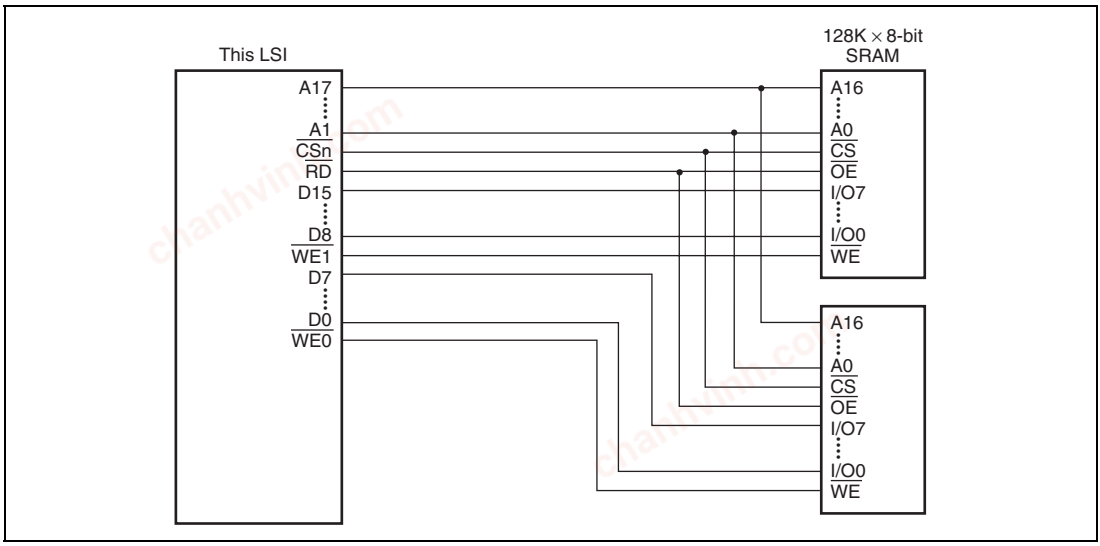

Figure 10.6 Example of 16-Bit Data-Width SRAM Connection

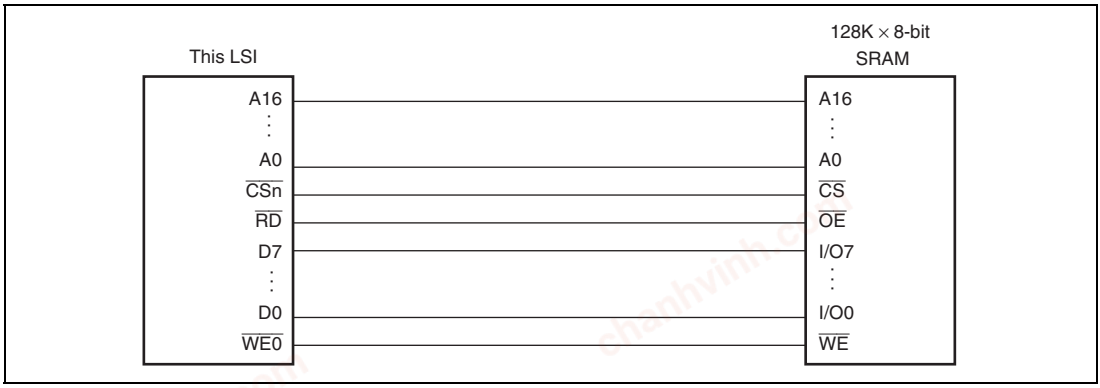

Figure 10.7 Example of 8-Bit Data-Width SRAM Connection

chanhvinh.com

10.5.3 Access Wait Control

Wait cycle insertion on a normal space access can be controlled by the settings of bits WR3 to WR0 in CSnWCR. It is possible for areas 1, 4, and 5 to insert wait cycles independently in read access and in write access. Areas 0, 2, and 3 have common access wait for read cycle and write cycle. The specified number of Tw cycles are inserted as wait cycles in a normal space access shown in figure 10.8.

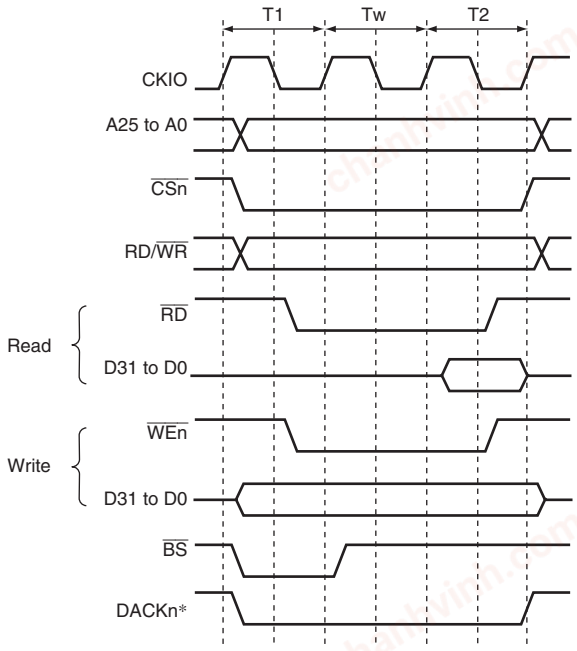

Note: * The waveform for DACKn is when active low is specified.

Figure 10.8 Wait Timing for Normal Space Access (Software Wait Only)

chanhvinh.com

When the WM bit in CSnWCR is cleared to 0, the external wait input $\overline{\text{WAIT}}$ signal is also sampled. $\overline{\text{WAIT}}$ pin sampling is shown in figure 10.9. A 2-cycle wait is specified as a software wait. The $\overline{\text{WAIT}}$ signal is sampled on the falling edge of CKIO at the transition from the T1 or Tw cycle to the T2 cycle.

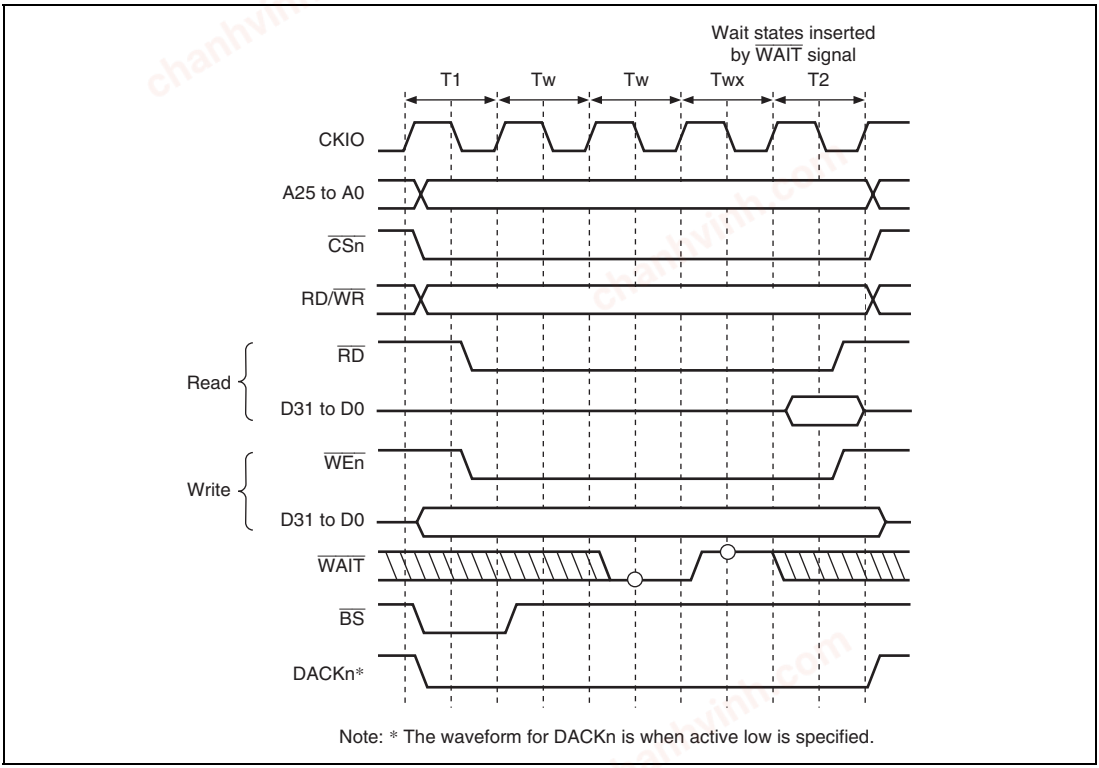

Figure 10.9 Wait Cycle Timing for Normal Space Access (Wait Cycle Insertion Using $\overline{\text{WAIT}}$ Signal)

chanhvinh.com

10.5.4 $\overline{\text{CSn}}$ Assert Period Expansion

The number of cycles from $\overline{\text{CSn}}$ assertion to $\overline{\text{RD}}$, $\overline{\text{WEn}}$ assertion can be specified by setting bits SW1 and SW0 in CSnWCR. The number of cycles from $\overline{\text{RD}}$, $\overline{\text{WEn}}$ negation to $\overline{\text{CSn}}$ negation can be specified by setting bits HW1 and HW0. Therefore, a flexible interface to an external device can be obtained. Figure 10.10 shows an example. A Th cycle and a Tf cycle are added before and after an ordinary cycle, respectively. In these cycles, $\overline{\text{RD}}$ and $\overline{\text{WEn}}$ are not asserted, while other signals are asserted. The data output is prolonged to the Tf cycle, and this prolongation is useful for devices with slow writing operations.

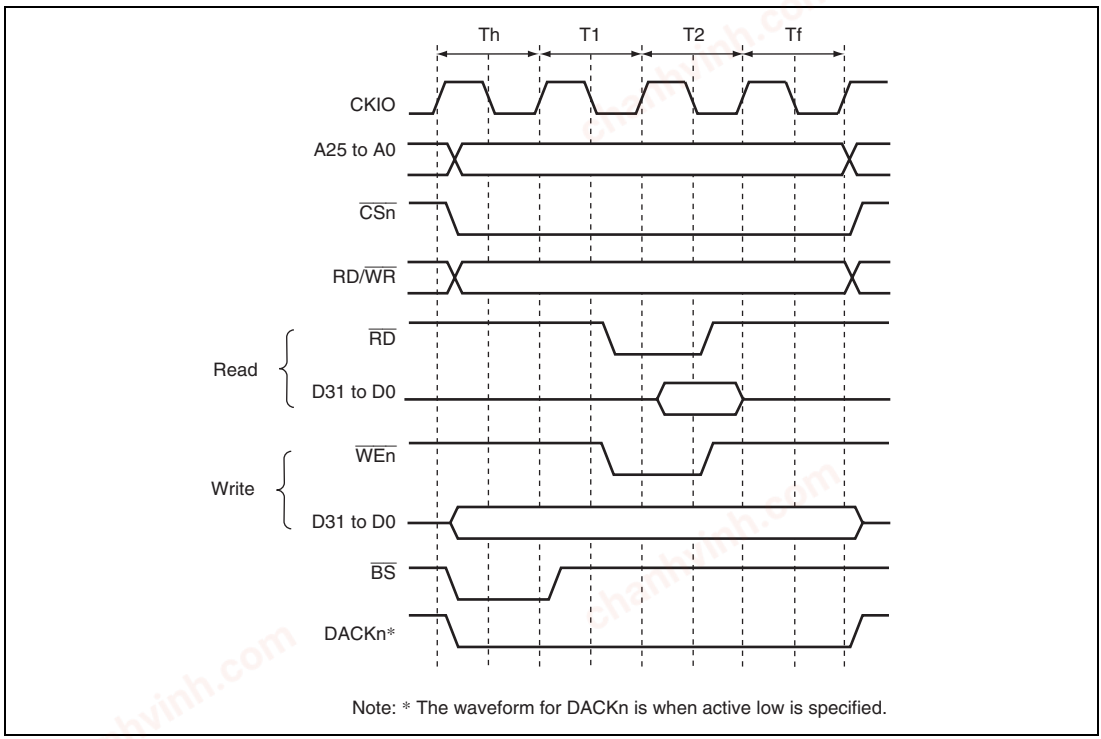

Figure 10.10 $\overline{\text{CSn}}$ Assert Period Expansion

chanhvinh.com

10.5.5 MPX-I/O Interface

Access timing for the MPX space is shown below. In the MPX space, $\overline{CS5}$, $\overline{AH}$, $\overline{RD}$, and $\overline{WEn}$ signals control the accessing. The basic access for the MPX space consists of 2 cycles of address output followed by an access to a normal space. The bus width for the address output cycle or the data input/output cycle is fixed to 8 bits or 16 bits. Alternatively, it can be 8 bits or 16 bits depending on the address to be accessed.

Output of the addresses D15 to D0 or D7 to D0 is performed from cycle Ta2 to cycle Ta3. Because cycle Ta1 has a high-impedance state, collisions of addresses and data can be avoided without inserting idle cycles, even in continuous access cycles. Address output is increased to 3 cycles by setting the MPXW bit in CS5WCR to 1.

The RD/$\overline{WR}$ signal is output at the same time as the $\overline{CS5}$ signal; it is high in the read cycle and low in the write cycle.

The data cycle is the same as that in a normal space access.

The delay cycles specified by SW[1:0] are inserted between the Ta3 and T1 cycles. The delay cycles specified by HW[1:0] are added after the T2 cycle.

Timing charts are shown in figures 10.11 to 10.13.

chanhvinh.com

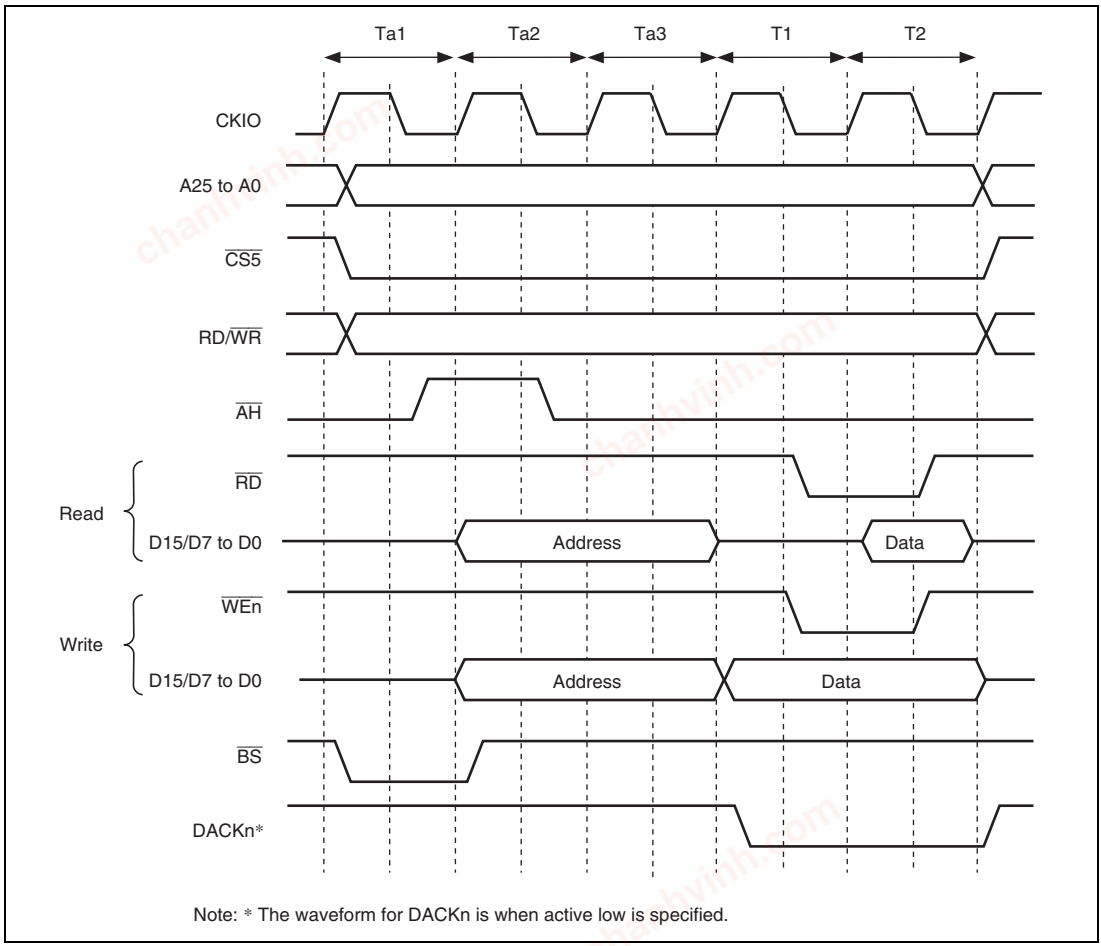

Figure 10.11 (1) Access Timing for MPX Space (Address Cycle No Wait, Data Cycle No Wait)

chanhvinh.com

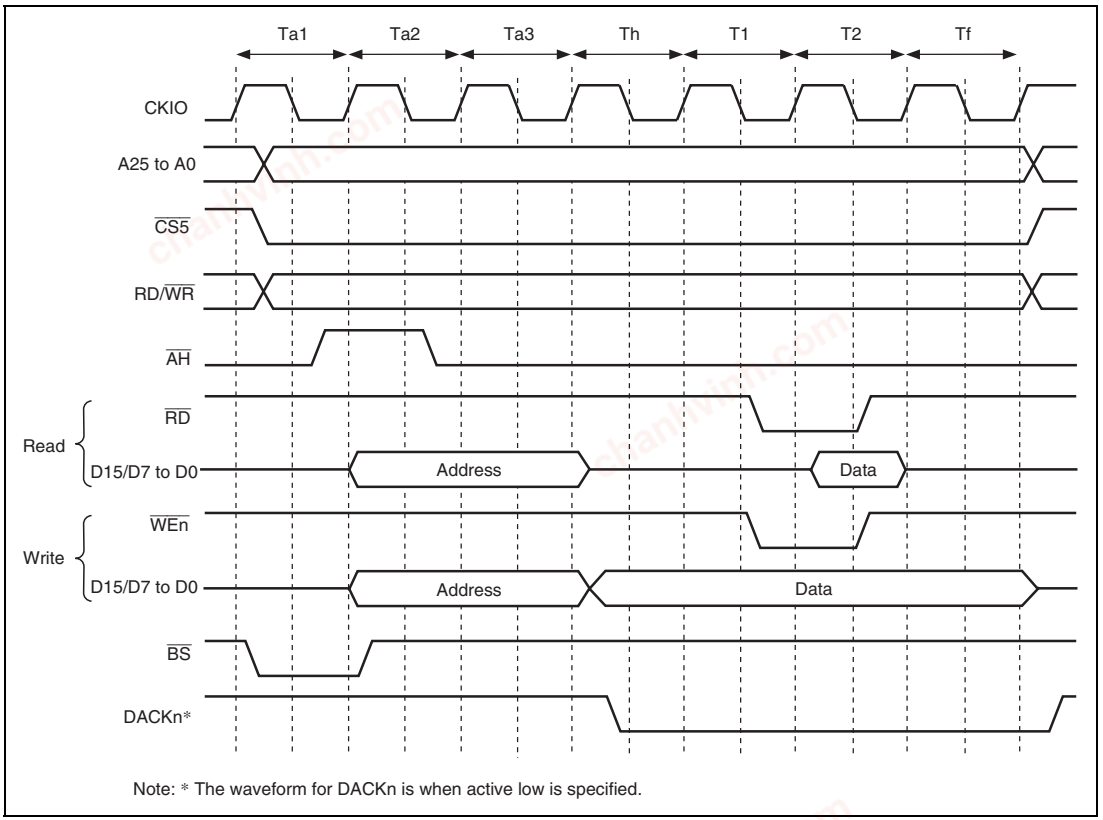

Figure 10.11 (2) Access Timing for MPX Space (Address Cycle No Wait, Assert Extension Cycle 1.5, Data Cycle No Wait, Negate Extension Cycle 1.5)

chanhvinh.com

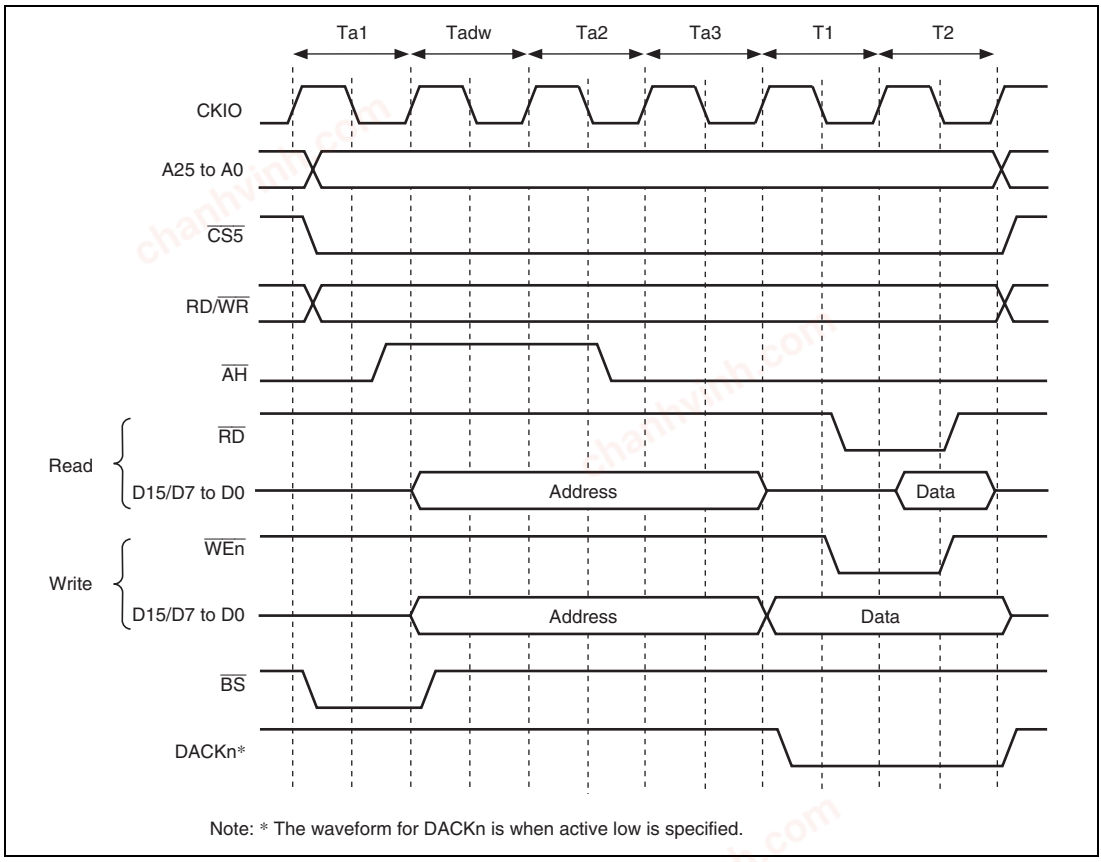

Note: * The waveform for DACKn is when active low is specified.

Figure 10.12 Access Timing for MPX Space (Address Cycle Wait 1, Data Cycle No Wait)

chanhvinh.com

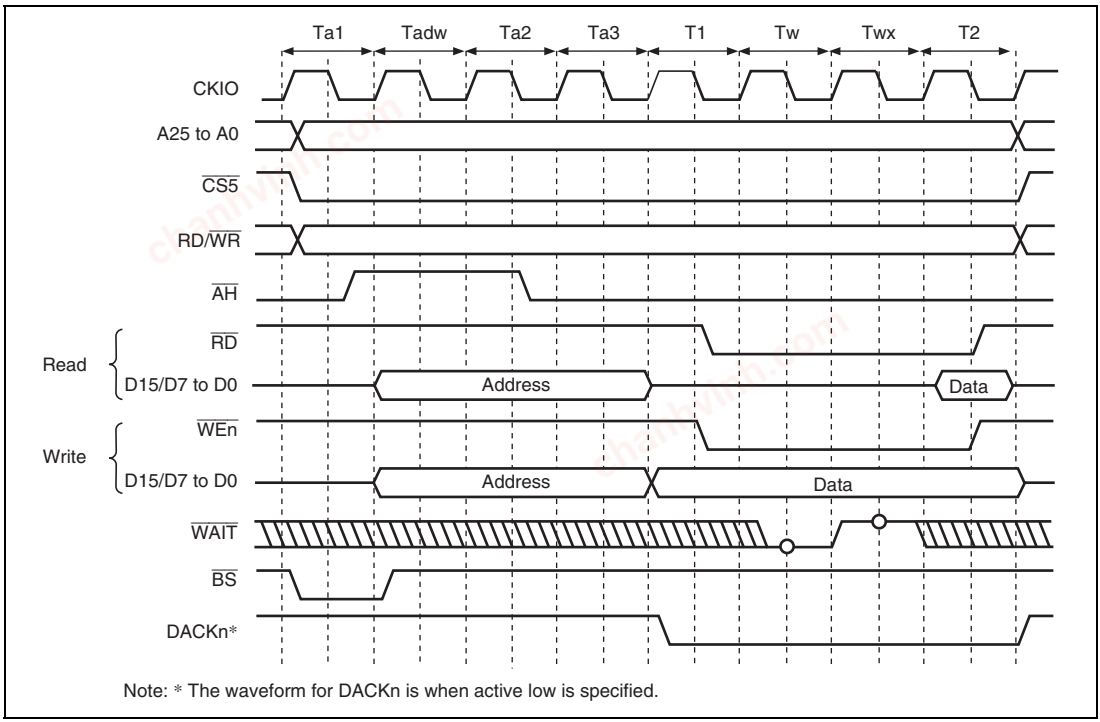

Note: * The waveform for DACKn is when active low is specified.

Figure 10.13 Access Timing for MPX Space (Address Cycle Access Wait 1, Data Cycle Wait 1, External Wait 1)

chanhvinh.com

10.5.6 SDRAM Interface

(1) SDRAM Direct Connection

The SDRAM that can be connected to this LSI is a product that has 11/12/13 bits of row address, 8/9/10 bits of column address, 4 or less banks, and uses the A10 pin for setting precharge mode in read and write command cycles.

The control signals for direct connection of SDRAM are $\overline{RAS}$, $\overline{CAS}$, RD/$\overline{WR}$, DQMUU, DQMUL, DQMLU, DQMLL, CKE, $\overline{CS2}$, and $\overline{CS3}$. All the signals other than $\overline{CS2}$ and $\overline{CS3}$ are common to all areas, and signals other than CKE are valid only when $\overline{CS2}$ or $\overline{CS3}$ is asserted. SDRAM can be connected to up to 2 spaces. The data bus width of the area that is connected to SDRAM is 16 bits or 32 bits.

Burst read/single write (burst length 1) and burst read/burst write (burst length 1) are supported as the SDRAM operating mode.

Commands for SDRAM can be specified by $\overline{RAS}$, $\overline{CAS}$, RD/$\overline{WR}$, and specific address signals. These commands supports:

- NOP
- Auto-refresh (REF)
- Self-refresh (SELF)
- All banks pre-charge (PALL)
- Specified bank pre-charge (PRE)
- Bank active (ACTV)
- Read (READ)
- Read with pre-charge (READA)
- Write (WRIT)
- Write with pre-charge (WRITA)
- Write mode register (MRS, EMRS)

The byte to be accessed is specified by DQMUU, DQMUL, DQMLU, and DQMLL. Reading or writing is performed for a byte whose corresponding DQMxx is low. For details on the relationship between DQMxx and the byte to be accessed, see section 10.5.1, Endian/Access Size and Data Alignment.

chanhvinh.com

Figures 10.14 and 10.15 show examples of the connection of the SDRAM with the LSI.

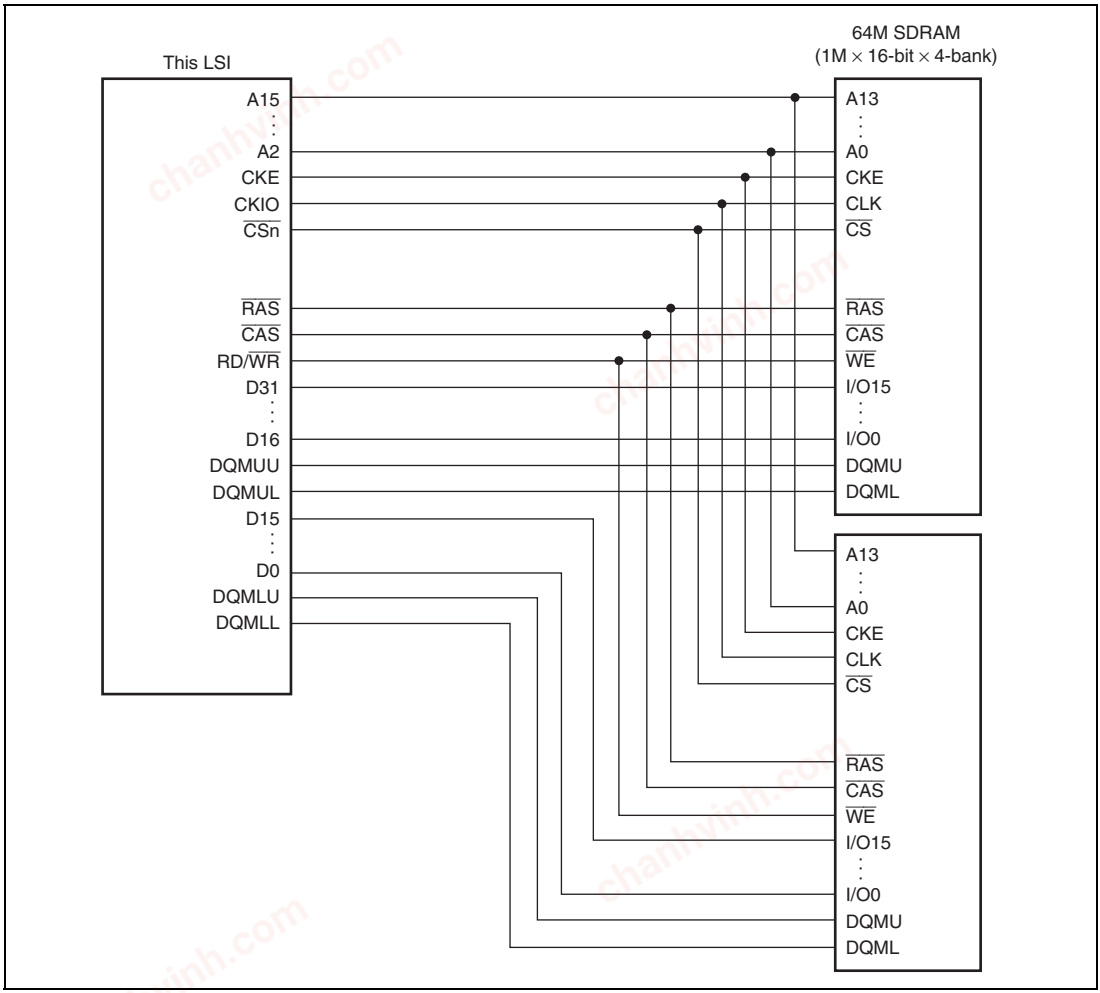

Figure 10.14 Example of 32-Bit Data Width SDRAM Connection

chanhvinh.com

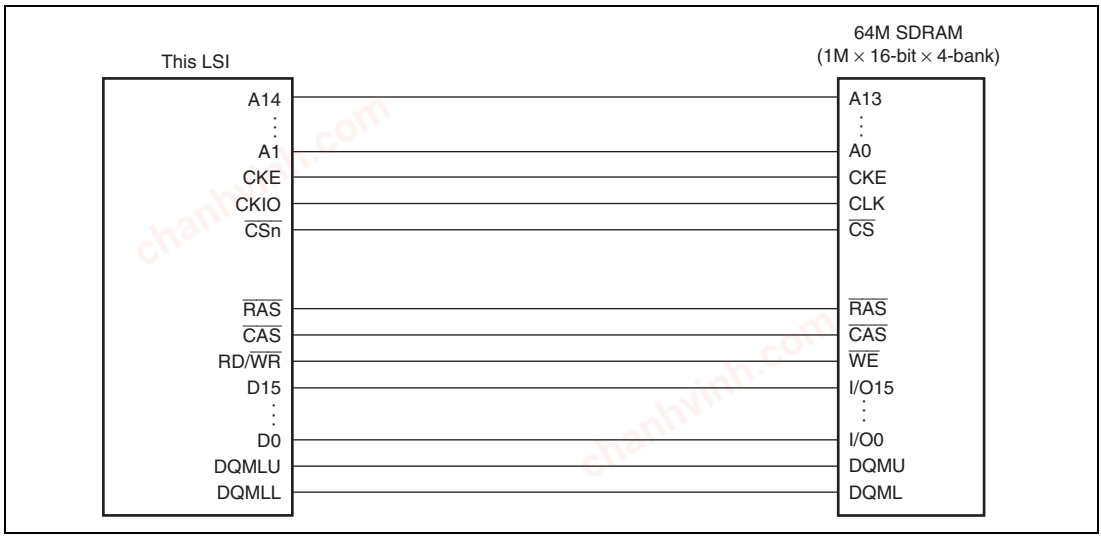

Figure 10.15 Example of 16-Bit Data Width SDRAM Connection

chanhvinh.com

(2) Address Multiplexing

An address multiplexing is specified so that SDRAM can be connected without external multiplexing circuitry according to the setting of bits BSZ[1:0] in CSnBCR and bits A2ROW[1:0], A2COL[1:0], A3ROW[1:0], and A3COL[1:0] in SDCR. Tables 10.11 to 10.16 show the relationship between the settings of bits BSZ[1:0], A2ROW[1:0], A2COL[1:0], A3ROW[1:0], and A3COL[1:0] and the bits output at the address pins. Do not specify those bits in the manner other than this table, otherwise the operation of this LSI is not guaranteed. A25 to A18 are not multiplexed and the original values of address are always output at these pins.

When the data bus width is 16 bits (BSZ1 and BSZ0 = B'10), A0 of SDRAM specifies a word address. Therefore, connect this A0 pin of SDRAM to the A1 pin of the LSI; the A1 pin of SDRAM to the A2 pin of the LSI, and so on. When the data bus width is 32 bits (BSZ1 and BSZ0 = B'11), A0 of SDRAM specifies a longword address. Therefore, connect this A0 pin of SDRAM to the A2 pin of the LSI; the A1 pin of SDRAM to the A3 pin of the LSI, and so on.

chanhvinh.com

Table 10.11 Relationship between BSZ[1:0], A2/3ROW[1:0], A2/3COL[1:0], and Address Multiplex Output (1)-1

Setting				
BSZ [1:0]	**A2/3 ROW [1:0]**	**A2/3 COL [1:0]**		
11 (32 bits)	**00 (11 bits)**	**00 (8 bits)**		
Output Pin of This LSI	**Row Address Output Cycle**	**Column Address Output Cycle**	**SDRAM Pin**	**Function**
A17	A25	A17		Unused
A16	A24	A16		
A15	A23	A15		
A14	A22*2	A22*2	A12 (BA1)	Specifies bank
A13	A21*2	A21*2	A11 (BA0)	
A12	A20	L/H*1	A10/AP	Specifies address/precharge
A11	A19	A11	A9	Address
A10	A18	A10	A8	
A9	A17	A9	A7	
A8	A16	A8	A6	
A7	A15	A7	A5	
A6	A14	A6	A4	
A5	A13	A5	A3	
A4	A12	A4	A2	
A3	A11	A3	A1	
A2	A10	A2	A0	
A1	A9	A1		Unused
A0	A8	A0		
Example of connected memory				
64-Mbit product (512 Kwords × 32 bits × 4 banks, column 8 bits product): 1				
16-Mbit product (512 Kwords × 16 bits × 2 banks, column 8 bits product): 2				

Notes: 1. L/H is a bit used in the command specification; it is fixed at L or H according to the access mode.
2. Bank address specification

chanhvinh.com

Table 10.11 Relationship between BSZ[1:0], A2/3ROW[1:0], A2/3COL[1:0], and Address Multiplex Output (1)-2

Setting				
BSZ [1:0]	A2/3 ROW [1:0]	A2/3 COL [1:0]		
11 (32 bits)	01 (12 bits)	00 (8 bits)		
Output Pin of This LSI	Row Address Output Cycle	Column Address Output Cycle	SDRAM Pin	Function
A17	A25	A17		Unused
A16	A24	A16		
A15	A23*2	A23*2	A13 (BA1)	Specifies bank
A14	A22*2	A22*2	A12 (BA0)	
A13	A21	A13	A11	Address
A12	A20	L/H*1	A10/AP	Specifies address/precharge
A11	A19	A11	A9	Address
A10	A18	A10	A8	
A9	A17	A9	A7	
A8	A16	A8	A6	
A7	A15	A7	A5	
A6	A14	A6	A4	
A5	A13	A5	A3	
A4	A12	A4	A2	
A3	A11	A3	A1	
A2	A10	A2	A0	
A1	A9	A1		Unused
A0	A8	A0		
Example of connected memory				
128-Mbit product (1 Mwords × 32 bits × 4 banks, column 8 bits product): 1				
64-Mbit product (1 Mwords × 16 bits × 4 banks, column 8 bits product): 2				

Notes: 1. L/H is a bit used in the command specification; it is fixed at L or H according to the access mode.
2. Bank address specification

chanhvinh.com

Table 10.12 Relationship between BSZ[1:0], A2/3ROW[1:0], A2/3COL[1:0], and Address Multiplex Output (2)-1

Setting				
BSZ [1:0]	**A2/3 ROW [1:0]**	**A2/3 COL [1:0]**		
11 (32 bits)	**01 (12 bits)**	**01 (9 bits)**		
Output Pin of This LSI	**Row Address Output Cycle**	**Column Address Output Cycle**	**SDRAM Pin**	**Function**
A17	A26	A17		Unused
A16	A25	A16		
A15	A24*2	A24*2	A13 (BA1)	Specifies bank
A14	A23*2	A23*2	A12 (BA0)	
A13	A22	A13	A11	Address
A12	A21	L/H*1	A10/AP	Specifies address/precharge
A11	A20	A11	A9	Address
A10	A19	A10	A8	
A9	A18	A9	A7	
A8	A17	A8	A6	
A7	A16	A7	A5	
A6	A15	A6	A4	
A5	A14	A5	A3	
A4	A13	A4	A2	
A3	A12	A3	A1	
A2	A11	A2	A0	
A1	A10	A1		Unused
A0	A9	A0		
Example of connected memory				
256-Mbit product (2 Mwords × 32 bits × 4 banks, column 9 bits product): 1				
128-Mbit product (2 Mwords × 16 bits × 4 banks, column 9 bits product): 2				

Notes: 1. L/H is a bit used in the command specification; it is fixed at L or H according to the access mode.
2. Bank address specification

chanhvinh.com

Table 10.12 Relationship between BSZ[1:0], A2/3ROW[1:0], A2/3COL[1:0], and Address Multiplex Output (2)-2

Setting				
BSZ [1:0]	**A2/3 ROW [1:0]**	**A2/3 COL [1:0]**		
11 (32 bits)	**01 (12 bits)**	**10 (10 bits)**		
Output Pin of This LSI	**Row Address Output Cycle**	**Column Address Output Cycle**	**SDRAM Pin**	**Function**
A17	A27	A17		Unused
A16	A26	A16		
A15	A25*2	A25*2	A13 (BA1)	Specifies bank
A14	A24*2	A24*2	A12 (BA0)	
A13	A23	A13	A11	Address
A12	A22	L/H*1	A10/AP	Specifies address/precharge
A11	A21	A11	A9	Address
A10	A20	A10	A8	
A9	A19	A9	A7	
A8	A18	A8	A6	
A7	A17	A7	A5	
A6	A16	A6	A4	
A5	A15	A5	A3	
A4	A14	A4	A2	
A3	A13	A3	A1	
A2	A12	A2	A0	
A1	A11	A1		Unused
A0	A10	A0		
Example of connected memory				
512-Mbit product (4 Mwords × 32 bits × 4 banks, column 10 bits product): 1				
256-Mbit product (4 Mwords × 16 bits × 4 banks, column 10 bits product): 2				

Notes: 1. L/H is a bit used in the command specification; it is fixed at L or H according to the access mode.
2. Bank address specification

chanhvinh.com

Table 10.13 Relationship between BSZ[1:0], A2/3ROW[1:0], A2/3COL[1:0], and Address Multiplex Output (3)

Setting				
BSZ [1:0]	**A2/3 ROW [1:0]**	**A2/3 COL [1:0]**		
11 (32 bits)	**10 (13 bits)**	**01 (9 bits)**		
Output Pin of This LSI	**Row Address Output Cycle**	**Column Address Output Cycle**	**SDRAM Pin**	**Function**
A17	A26	A17		Unused
A16	A25*[2]	A25*[2]	A14 (BA1)	Specifies bank
A15	A24*[2]	A24*[2]	A13 (BA0)	
A14	A23	A14	A12	Address
A13	A22	A13	A11	
A12	A21	L/H*[1]	A10/AP	Specifies address/precharge
A11	A20	A11	A9	Address
A10	A19	A10	A8	
A9	A18	A9	A7	
A8	A17	A8	A6	
A7	A16	A7	A5	
A6	A15	A6	A4	
A5	A14	A5	A3	
A4	A13	A4	A2	
A3	A12	A3	A1	
A2	A11	A2	A0	
A1	A10	A1		Unused
A0	A9	A0		
Example of connected memory				
512-Mbit product (4 Mwords × 32 bits × 4 banks, column 9 bits product): 1				
256-Mbit product (4 Mwords × 16 bits × 4 banks, column 9 bits product): 2				

Notes: 1. L/H is a bit used in the command specification; it is fixed at L or H according to the access mode.
2. Bank address specification

chanhvinh.com

Table 10.14 Relationship between BSZ[1:0], A2/3ROW[1:0], A2/3COL[1:0], and Address Multiplex Output (4)-1

Setting				
BSZ [1:0]	**A2/3 ROW [1:0]**	**A2/3 COL [1:0]**		
10 (16 bits)	**00 (11 bits)**	**00 (8 bits)**		
Output Pin of This LSI	**Row Address Output Cycle**	**Column Address Output Cycle**	**SDRAM Pin**	**Function**
A17	A25	A17		Unused
A16	A24	A16		
A15	A23	A15		
A14	A22	A14		
A13	A21	A21		
A12	A20*2	A20*2	A11 (BA0)	Specifies bank
A11	A19	L/H*1	A10/AP	Specifies address/precharge
A10	A18	A10	A9	Address
A9	A17	A9	A8	
A8	A16	A8	A7	
A7	A15	A7	A6	
A6	A14	A6	A5	
A5	A13	A5	A4	
A4	A12	A4	A3	
A3	A11	A3	A2	
A2	A10	A2	A1	
A1	A9	A1	A0	
A0	A8	A0		Unused
Example of connected memory				
16-Mbit product (512 Kwords × 16 bits × 2 banks, column 8 bits product): 1				

Notes: 1. L/H is a bit used in the command specification; it is fixed at L or H according to the access mode.
2. Bank address specification

chanhvinh.com

Table 10.14 Relationship between BSZ[1:0], A2/3ROW[1:0], A2/3COL[1:0], and Address Multiplex Output (4)-2

Setting				
BSZ [1:0]	**A2/3 ROW [1:0]**	**A2/3 COL [1:0]**		
10 (16 bits)	**01 (12 bits)**	**00 (8 bits)**		
Output Pin of This LSI	**Row Address Output Cycle**	**Column Address Output Cycle**	**SDRAM Pin**	**Function**
A17	A25	A17		Unused
A16	A24	A16		
A15	A23	A15		
A14	A22*[2]	A22*[2]	A13 (BA1)	Specifies bank
A13	A21*[2]	A21*[2]	A12 (BA0)	
A12	A20	A12	A11	Address
A11	A19	L/H*[1]	A10/AP	Specifies address/precharge
A10	A18	A10	A9	Address
A9	A17	A9	A8	
A8	A16	A8	A7	
A7	A15	A7	A6	
A6	A14	A6	A5	
A5	A13	A5	A4	
A4	A12	A4	A3	
A3	A11	A3	A2	
A2	A10	A2	A1	
A1	A9	A1	A0	
A0	A8	A0		Unused
Example of connected memory				
64-Mbit product (1 Mwords × 16 bits × 4 banks, column 8 bits product): 1				

Notes: 1. L/H is a bit used in the command specification; it is fixed at L or H according to the access mode.
2. Bank address specification

chanhvinh.com

Table 10.15 Relationship between BSZ[1:0], A2/3ROW[1:0], A2/3COL[1:0], and Address Multiplex Output (5)-1

Setting				
BSZ [1:0]	**A2/3 ROW [1:0]**	**A2/3 COL [1:0]**		
10 (16 bits)	**01 (12 bits)**	**01 (9 bits)**		
Output Pin of This LSI	**Row Address Output Cycle**	**Column Address Output Cycle**	**SDRAM Pin**	**Function**
A17	A26	A17		Unused
A16	A25	A16		
A15	A24	A15		
A14	A23*2	A23*2	A13 (BA1)	Specifies bank
A13	A22*2	A22*2	A12 (BA0)	
A12	A21	A12	A11	Address
A11	A20	L/H*1	A10/AP	Specifies address/precharge
A10	A19	A10	A9	Address
A9	A18	A9	A8	
A8	A17	A8	A7	
A7	A16	A7	A6	
A6	A15	A6	A5	
A5	A14	A5	A4	
A4	A13	A4	A3	
A3	A12	A3	A2	
A2	A11	A2	A1	
A1	A10	A1	A0	
A0	A9	A0		Unused
Example of connected memory				
128-Mbit product (2 Mwords × 16 bits × 4 banks, column 9 bits product): 1				

Notes: 1. L/H is a bit used in the command specification; it is fixed at L or H according to the access mode.
2. Bank address specification

chanhvinh.com

Table 10.15 Relationship between BSZ[1:0], A2/3ROW[1:0], A2/3COL[1:0], and Address Multiplex Output (5)-2

Setting				
BSZ [1:0]	**A2/3 ROW [1:0]**	**A2/3 COL [1:0]**		
10 (16 bits)	**01 (12 bits)**	**10 (10 bits)**		
Output Pin of This LSI	**Row Address Output Cycle**	**Column Address Output Cycle**	**SDRAM Pin**	**Function**
A17	A27	A17		Unused
A16	A26	A16		
A15	A25	A15		
A14	A24*[2]	A24*[2]	A13 (BA1)	Specifies bank
A13	A23*[2]	A23*[2]	A12 (BA0)	
A12	A22	A12	A11	Address
A11	A21	L/H*[1]	A10/AP	Specifies address/precharge
A10	A20	A10	A9	Address
A9	A19	A9	A8	
A8	A18	A8	A7	
A7	A17	A7	A6	
A6	A16	A6	A5	
A5	A15	A5	A4	
A4	A14	A4	A3	
A3	A13	A3	A2	
A2	A12	A2	A1	
A1	A11	A1	A0	
A0	A10	A0		Unused
Example of connected memory				
256-Mbit product (4 Mwords × 16 bits × 4 banks, column 10 bits product): 1				

Notes: 1. L/H is a bit used in the command specification; it is fixed at L or H according to the access mode.
2. Bank address specification

chanhvinh.com

Table 10.16 Relationship between BSZ[1:0], A2/3ROW[1:0], A2/3COL[1:0], and Address Multiplex Output (6)-1

Setting				
BSZ [1:0]	**A2/3 ROW [1:0]**	**A2/3 COL [1:0]**		
10 (16 bits)	**10 (13 bits)**	**01 (9 bits)**		
Output Pin of This LSI	**Row Address Output Cycle**	**Column Address Output Cycle**	**SDRAM Pin**	**Function**
A17	A26	A17		Unused
A16	A25	A16		
A15	A24*2	A24*2	A14 (BA1)	Specifies bank
A14	A23*2	A23*2	A13 (BA0)	
A13	A22	A13	A12	Address
A12	A21	A12	A11	
A11	A20	L/H*1	A10/AP	Specifies address/precharge
A10	A19	A10	A9	Address
A9	A18	A9	A8	
A8	A17	A8	A7	
A7	A16	A7	A6	
A6	A15	A6	A5	
A5	A14	A5	A4	
A4	A13	A4	A3	
A3	A12	A3	A2	
A2	A11	A2	A1	
A1	A10	A1	A0	
A0	A9	A0		Unused
Example of connected memory				
256-Mbit product (4 Mwords × 16 bits × 4 banks, column 9 bits product): 1				

Notes: 1. L/H is a bit used in the command specification; it is fixed at L or H according to the access mode.
2. Bank address specification

chanhvinh.com

Table 10.16 Relationship between BSZ[1:0], A2/3ROW[1:0], A2/3COL[1:0], and Address Multiplex Output (6)-2

Setting				
BSZ [1:0]	**A2/3 ROW [1:0]**	**A2/3 COL [1:0]**		
10 (16 bits)	**10 (13 bits)**	**10 (10 bits)**		
Output Pin of This LSI	**Row Address Output Cycle**	**Column Address Output Cycle**	**SDRAM Pin**	**Function**
A17	A27	A17		Unused
A16	A26	A16		
A15	A25*2	A25*2	A14 (BA1)	Specifies bank
A14	A24*2	A24*2	A13 (BA0)	
A13	A23	A13	A12	Address
A12	A22	A12	A11	
A11	A21	L/H*1	A10/AP	Specifies address/precharge
A10	A20	A10	A9	Address
A9	A19	A9	A8	
A8	A18	A8	A7	
A7	A17	A7	A6	
A6	A16	A6	A5	
A5	A15	A5	A4	
A4	A14	A4	A3	
A3	A13	A3	A2	
A2	A12	A2	A1	
A1	A11	A1	A0	
A0	A10	A0		Unused
Example of connected memory				
512-Mbit product (8 Mwords × 16 bits × 4 banks, column 10 bits product): 1				

Notes: 1. L/H is a bit used in the command specification; it is fixed at L or H according to the access mode.
2. Bank address specification

chanhvinh.com

(3) Burst Read

A burst read occurs in the following cases with this LSI.

- Access size in reading is larger than data bus width.
- 16-byte transfer in cache miss.
- 16-byte transfer in the direct memory access controller
- 32-byte transfer in the OpenVG™-compliant Renesas graphics processor, image renderer, and video display controller 4
- 128-byte transfer in the video display controller 4

This LSI always accesses the SDRAM with burst length 1. For example, read access of burst length 1 is performed consecutively 8 times to read 16-byte continuous data from the SDRAM that is connected to a 16-bit data bus. This access is called the burst read with the burst number 8. Table 10.17 shows the relationship between the access size and the number of bursts.

Table 10.17 Relationship between Access Size and Number of Bursts

Bus Width	Access Size	Number of Bursts
16 bits	8 bits	1
	16 bits	1
	32 bits	2
	16 bytes	8
	32 bytes	16
	128 bytes	64
32 bits	8 bits	1
	16 bits	1
	32 bits	1
	16 bytes	4
	32 bytes	8
	128 bytes	32

chanhvinh.com

Figures 10.16 and 10.17 show timing charts in burst read. In burst read, an ACTV command is output in the Tr cycle, the READ command is issued in the Tc1, Tc2, and Tc3 cycles, the READA command is issued in the Tc4 cycle, and the read data is received at the rising edge of the external clock (CKIO) in the Td1 to Td4 cycles. The Tap cycle is used to wait for the completion of an auto-precharge induced by the READA command in the SDRAM. In the Tap cycle, a new command will not be issued to the same bank. However, access to another CS space or another bank in the same SDRAM space is enabled. The number of Tap cycles is specified by the WTRP1 and WTRP0 bits in CS3WCR.

In this LSI, wait cycles can be inserted by specifying each bit in CS3WCR to connect the SDRAM in variable frequencies. Figure 10.17 shows an example in which wait cycles are inserted. The number of cycles from the Tr cycle where the ACTV command is output to the Tc1 cycle where the READ command is output can be specified using the WTRCD1 and WTRCD0 bits in CS3WCR. If the WTRCD1 and WTRCD0 bits specify one cycles or more, a Trw cycle where the NOP command is issued is inserted between the Tr cycle and Tc1 cycle. The number of cycles from the Tc1 cycle where the READ command is output to the Td1 cycle where the read data is latched can be specified for the CS2 and CS3 spaces independently, using the A2CL1 and A2CL0 bits in CS2WCR or the A3CL1 and A3CL0 bits in CS3WCR. The number of cycles from Tc1 to Td1 corresponds to the SDRAM CAS latency. The CAS latency for the SDRAM is normally defined as up to three cycles. However, the CAS latency in this LSI can be specified as 1 to 4 cycles. This CAS latency can be achieved by connecting a latch circuit between this LSI and the SDRAM.

A Tde cycle is an idle cycle required to transfer the read data into this LSI and occurs once for every burst read or every single read.

chanhvinh.com

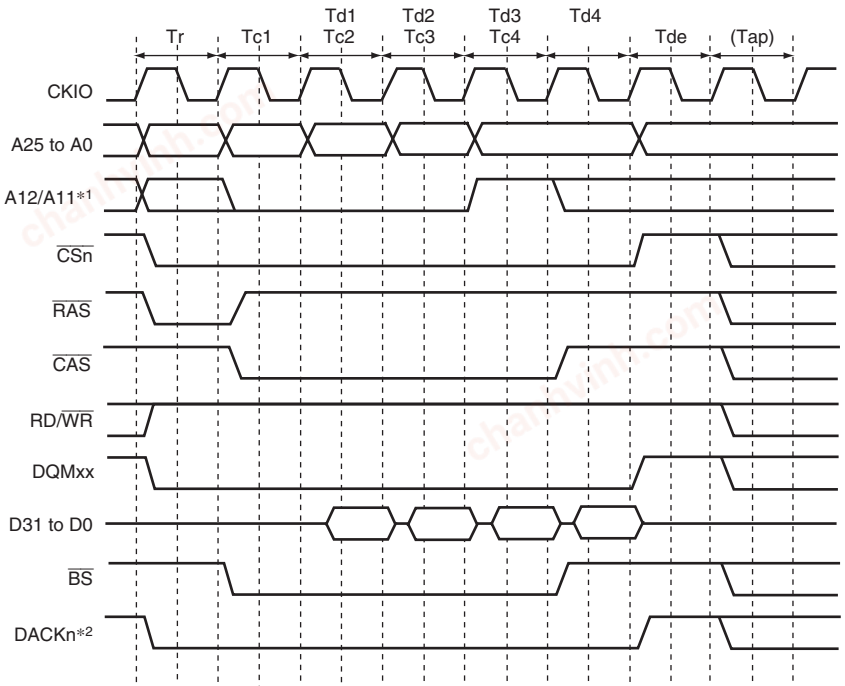

Notes: 1. Address pin to be connected to pin A10 of SDRAM.
2. The waveform for DACKn is when active low is specified.

Figure 10.16 Burst Read Basic Timing (CAS Latency 1, Auto Pre-Charge)

chanhvinh.com

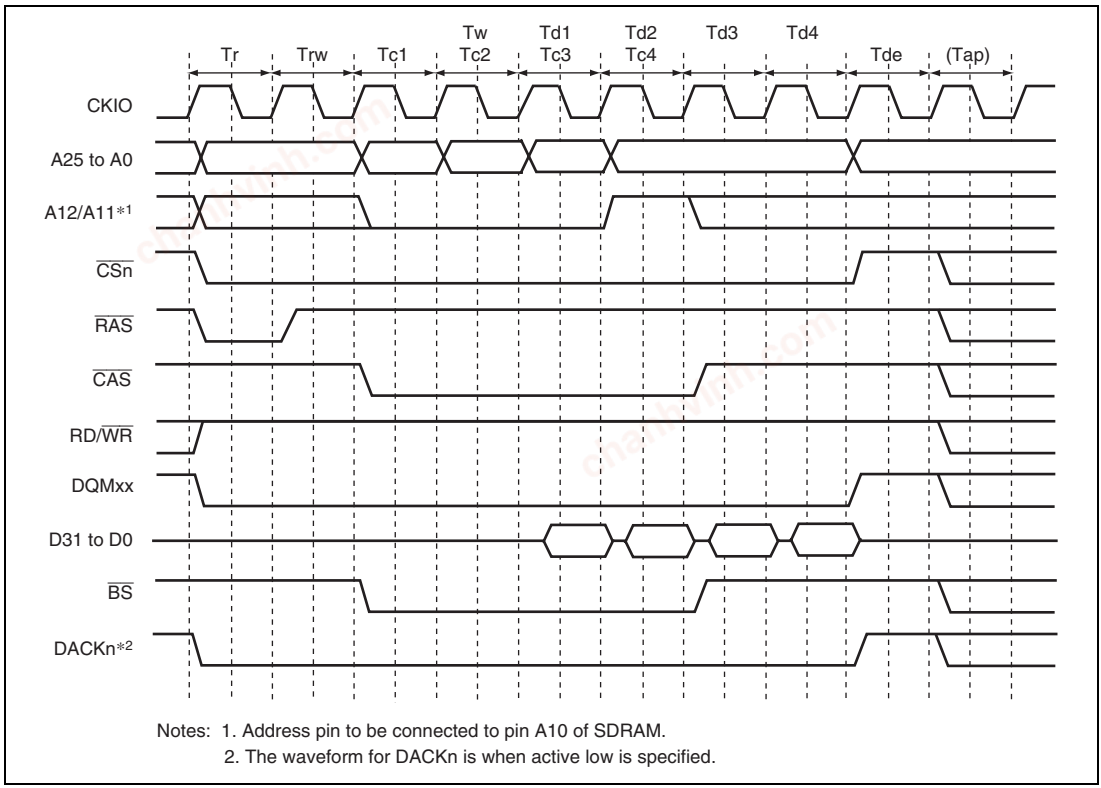

Notes: 1. Address pin to be connected to pin A10 of SDRAM.
2. The waveform for DACKn is when active low is specified.

Figure 10.17 Burst Read Wait Specification Timing (CAS Latency 2, WTRCD[1:0] = 1 Cycle, Auto Pre-Charge)

chanhvinh.com

(4) Single Read

A read access ends in one cycle when data exists in a cache-disabled space and the data bus width is larger than or equal to the access size. As the SDRAM is set to the burst read with the burst length 1, only the required data is output. A read access that ends in one cycle is called single read.

Figure 10.18 shows the single read basic timing.

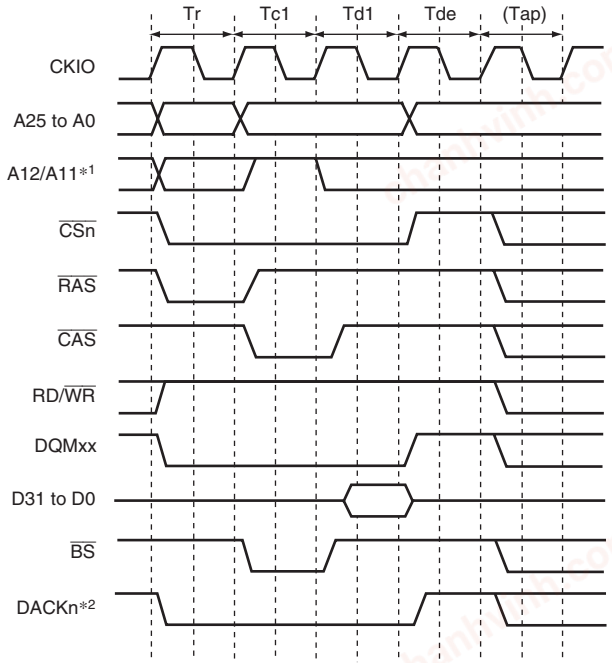

Notes: 1. Address pin to be connected to pin A10 of SDRAM.
2. The waveform for DACKn is when active low is specified.

Figure 10.18 Basic Timing for Single Read (CAS Latency 1, Auto Pre-Charge)

chanhvinh.com

(5) Burst Write

A burst write occurs in the following cases in this LSI.

- Access size in writing is larger than data bus width.
- Write-back of the cache
- 16-byte transfer in the direct memory access controller
- 32-byte transfer in the video display controller 4
- 128-byte transfer in the video display controller 4

This LSI always accesses SDRAM with burst length 1. For example, write access of burst length 1 is performed continuously 8 times to write 16-byte continuous data to the SDRAM that is connected to a 16-bit data bus. This access is called burst write with the burst number 8. The relationship between the access size and the number of bursts is shown in table 10.17. Figure 10.19 shows a timing chart for burst writes. In burst write, an ACTV command is output in the Tr cycle, the WRIT command is issued in the Tc1, Tc2, and Tc3 cycles, and the WRITA command is issued to execute an auto-precharge in the Tc4 cycle. In the write cycle, the write data is output simultaneously with the write command. After the write command with the auto-precharge is output, the Trw1 cycle that waits for the auto-precharge initiation is followed by the Tap cycle that waits for completion of the auto-precharge induced by the WRITA command in the SDRAM. Between the Trwl and the Tap cycle, a new command will not be issued to the same bank. However, access to another CS space or another bank in the same SDRAM space is enabled. The number of Trw1 cycles is specified by the TRWL1 and TRWL0 bits in CS3WCR. The number of Tap cycles is specified by the WTRP1 and WTRP0 bits in CS3WCR.

chanhvinh.com

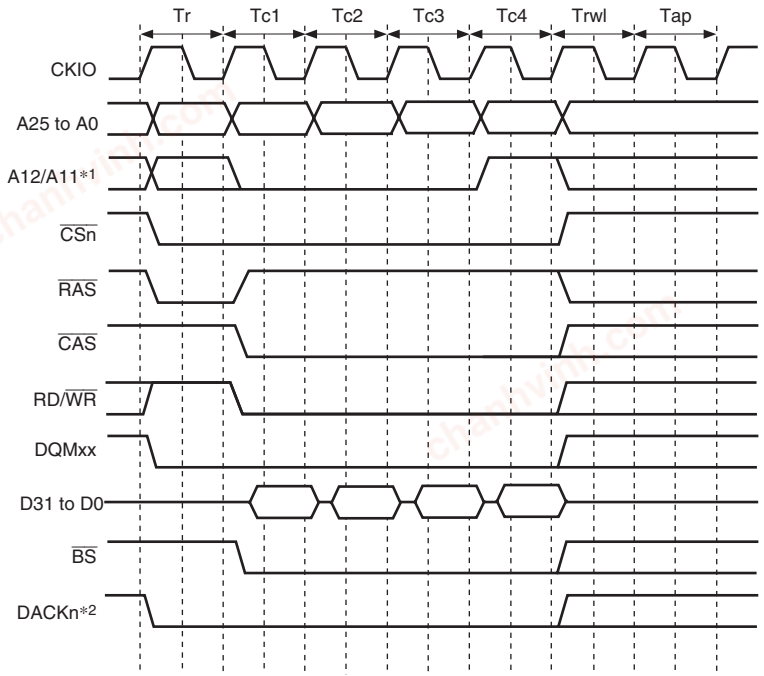

Notes: 1. Address pin to be connected to pin A10 of SDRAM.
2. The waveform for DACKn is when active low is specified.

Figure 10.19 Basic Timing for Burst Write (Auto Pre-Charge)

chanhvinh.com

(6) Single Write

A write access ends in one cycle when data is written in a cache-disabled space and the data bus width is larger than or equal to access size. As a single write or burst write with burst length 1 is set in SDRAM, only the required data is output. The write access that ends in one cycle is called single write. Figure 10.20 shows the single write basic timing.

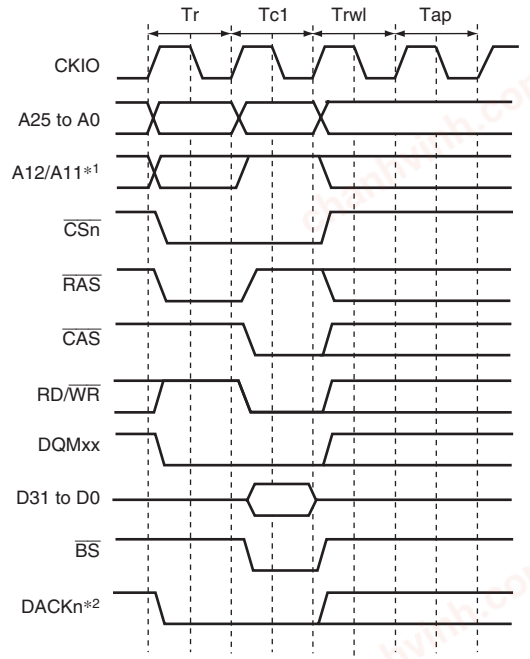

Notes: 1. Address pin to be connected to pin A10 of SDRAM.
2. The waveform for DACKn is when active low is specified.

Figure 10.20 Single Write Basic Timing (Auto-Precharge)

chanhvinh.com

(7) Bank Active

The SDRAM bank function can be used to support high-speed access to the same row address. When the BACTV bit in SDCR is 1, access is performed using commands without auto-precharge (READ or WRIT). This function is called bank-active function. This function is valid only for area 3. When area 3 is set to bank-active mode, area 2 should be set to normal space or SRAM with byte selection. When areas 2 and 3 are both set to SDRAM, auto precharge mode must be set.

When the bank-active function is used, precharging is not performed when the access ends. When accessing the same row address in the same bank, it is possible to issue the READ or WRIT command immediately, without issuing an ACTV command. As SDRAM is internally divided into several banks, it is possible to activate one row address in each bank. If the next access is to a different row address, a PRE command is first issued to precharge the relevant bank, then when precharging is completed, the access is performed by issuing an ACTV command followed by a READ or WRIT command. If this is followed by an access to a different row address, the access time will be longer because of the precharging performed after the access request is issued. The number of cycles between issuance of the PRE command and the ACTV command is determined by the WTRP1 and WTPR0 bits in CS3WCR.

In a write, when an auto-precharge is performed, a command cannot be issued to the same bank for a period of Trwl + Tap cycles after issuance of the WRITA command. When bank active mode is used, READ or WRIT commands can be issued successively if the row address is the same. The number of cycles can thus be reduced by Trwl + Tap cycles for each write.

There is a limit on tRAS, the time for placing each bank in the active state. If there is no guarantee that there will not be a cache hit and another row address will be accessed within the period in which this value is maintained by program execution, it is necessary to set auto-refresh and set the refresh cycle to no more than the maximum value of tRAS.

A burst read cycle without auto-precharge is shown in figure 10.21, a burst read cycle for the same row address in figure 10.22, and a burst read cycle for different row addresses in figure 10.23. Similarly, a single write cycle without auto-precharge is shown in figure 10.24, a single write cycle for the same row address in figure 10.25, and a single write cycle for different row addresses in figure 10.26.

In figure 10.22, a Tnop cycle in which no operation is performed is inserted before the Tc cycle that issues the READ command. The Tnop cycle is inserted to acquire two cycles of CAS latency for the DQMxx signal that specifies the read byte in the data read from the SDRAM. If the CAS latency is specified as two cycles or more, the Tnop cycle is not inserted because the two cycles of latency can be acquired even if the DQMxx signal is asserted after the Tc cycle.

chanhvinh.com

When bank active mode is set, if only access cycles to the respective banks in the area 3 space are considered, as long as access cycles to the same row address continue, the operation starts with the cycle in figure 10.21 or 10.24, followed by repetition of the cycle in figure 10.22 or 10.25. An access to a different area during this time has no effect. If there is an access to a different row address in the bank active state, the bus cycle in figure 10.23 or 10.26 is executed instead of that in figure 10.22 or 10.25. In bank active mode, too, all banks become inactive after a refresh cycle or after the bus is released as the result of bus arbitration.

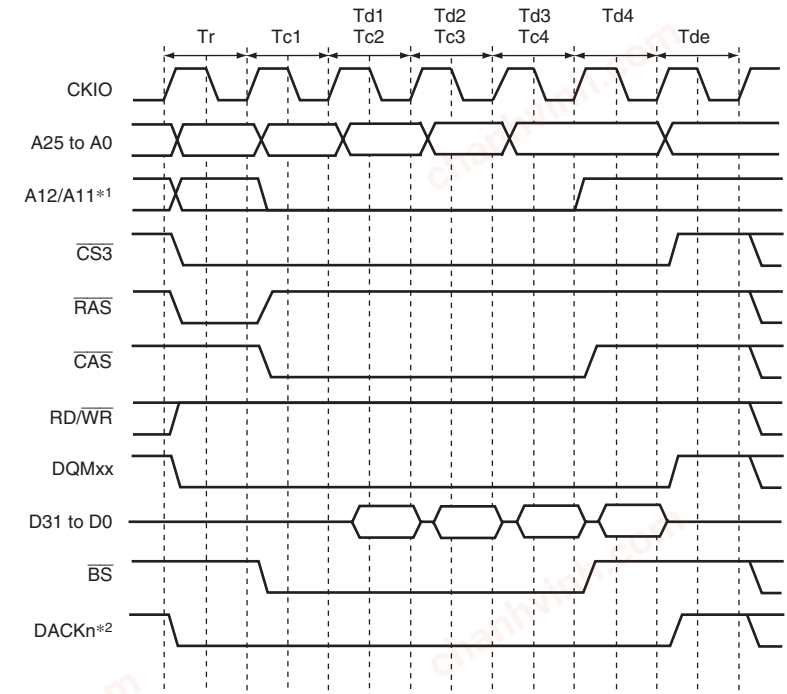

Notes: 1. Address pin to be connected to pin A10 of SDRAM.
2. The waveform for DACKn is when active low is specified.

Figure 10.21 Burst Read Timing (Bank Active, Different Bank, CAS Latency 1)

chanhvinh.com

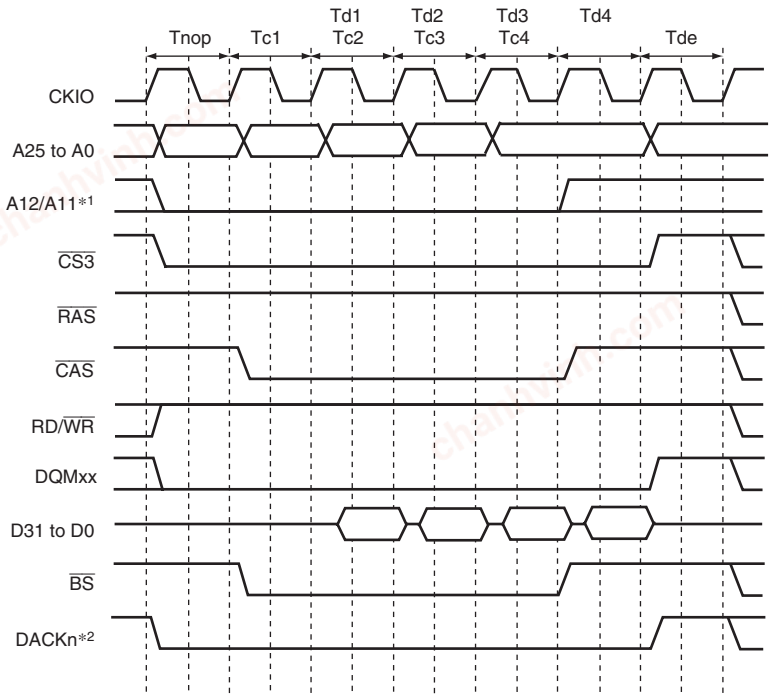

Notes: 1. Address pin to be connected to pin A10 of SDRAM.
2. The waveform for DACKn is when active low is specified.

Figure 10.22 Burst Read Timing
(Bank Active, Same Row Addresses in the Same Bank, CAS Latency 1)

chanhvinh.com

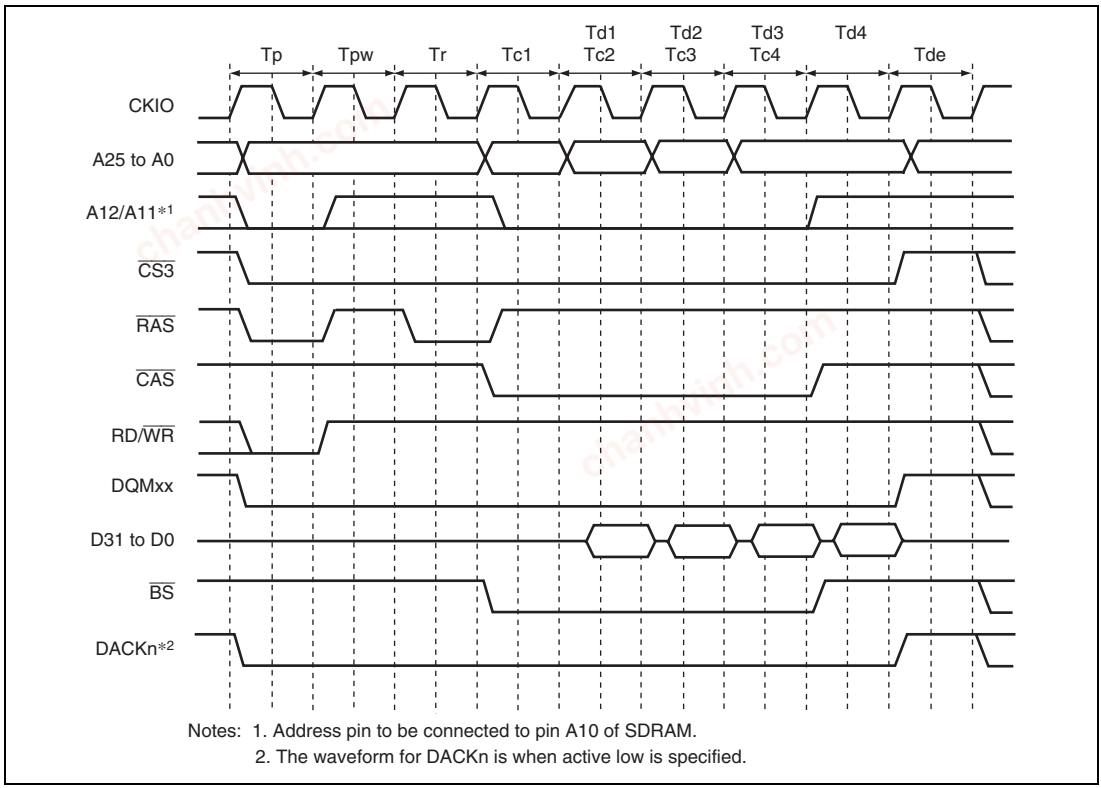

Notes: 1. Address pin to be connected to pin A10 of SDRAM.
2. The waveform for DACKn is when active low is specified.

Figure 10.23 Burst Read Timing
(Bank Active, Different Row Addresses in the Same Bank, CAS Latency 1)

chanhvinh.com

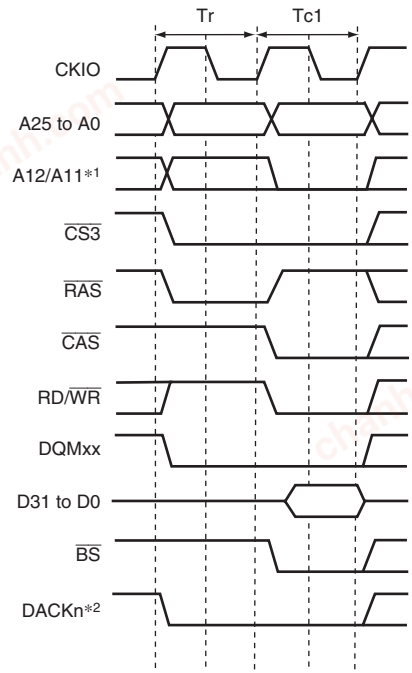

Notes: 1. Address pin to be connected to pin A10 of SDRAM.
2. The waveform for DACKn is when active low is specified.

Figure 10.24 Single Write Timing (Bank Active, Different Bank)

chanhvinh.com

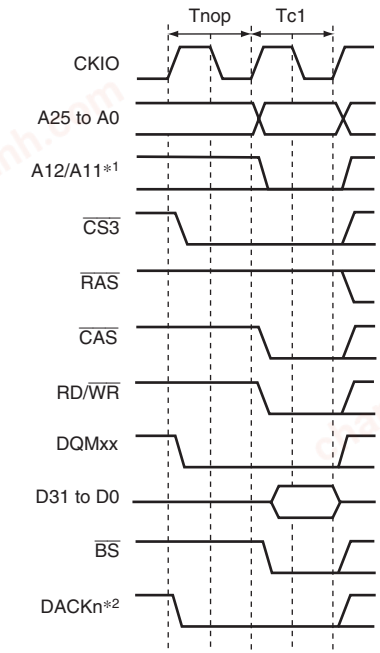

Notes: 1. Address pin to be connected to pin A10 of SDRAM.
2. The waveform for DACKn is when active low is specified.

Figure 10.25 Single Write Timing (Bank Active, Same Row Addresses in the Same Bank)

chanhvinh.com

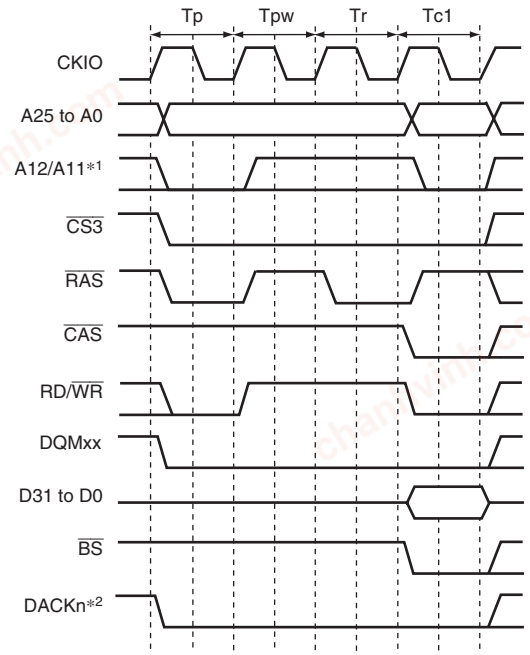

Notes: 1. Address pin to be connected to pin A10 of SDRAM.
2. The waveform for DACKn is when active low is specified.

Figure 10.26 Single Write Timing (Bank Active, Different Row Addresses in the Same Bank)

(8) Refreshing

This module has a function for controlling SDRAM refreshing. Auto-refreshing can be performed by clearing the RMODE bit to 0 and setting the RFSH bit to 1 in SDCR. A continuous refreshing can be performed by setting the RRC2 to RRC0 bits in RTCSR. If SDRAM is not accessed for a long period, self-refresh mode, in which the power consumption for data retention is low, can be activated by setting both the RMODE bit and the RFSH bit to 1.

chanhvinh.com

(a) Auto-refreshing

Refreshing is performed at intervals determined by the input clock selected by bits CKS2 to CKS0 in RTCSR, and the value set by in RTCOR. The value of bits CKS2 to CKS0 in RTCOR should be set so as to satisfy the refresh interval stipulation for the SDRAM used. First make the settings for RTCOR, RTCNT, and the RMODE and RFSH bits in SDCR, and then make the CKS2 to CKS0 and RRC2 to RRC0 settings. When the clock is selected by bits CKS2 to CKS0, RTCNT starts counting up from the value at that time. The RTCNT value is constantly compared with the RTCOR value, and if the two values are the same, a refresh request is generated and an auto-refresh is performed for the number of times specified by the RRC2 to RRC0. At the same time, RTCNT is cleared to zero and the count-up is restarted.

Figure 10.27 shows the auto-refresh cycle timing. After starting the auto refreshing, PALL command is issued in the Tp cycle to make all the banks to pre-charged state from active state when some bank is being pre-charged. Then REF command is issued in the Trr cycle after inserting idle cycles of which number is specified by the WTRP1 and WTRP0 bits in CS3WCR. A new command is not issued for the duration of the number of cycles specified by the WTRC1 and WTRC0 bits in CS3WCR after the Trr cycle. The WTRC1 and WTRC0 bits must be set so as to satisfy the SDRAM refreshing cycle time stipulation (tRC). An idle cycle is inserted between the Tp cycle and Trr cycle when the setting value of the WTRP1 and WTRP0 bits in CS3WCR is longer than or equal to 1 cycle.

chanhvinh.com

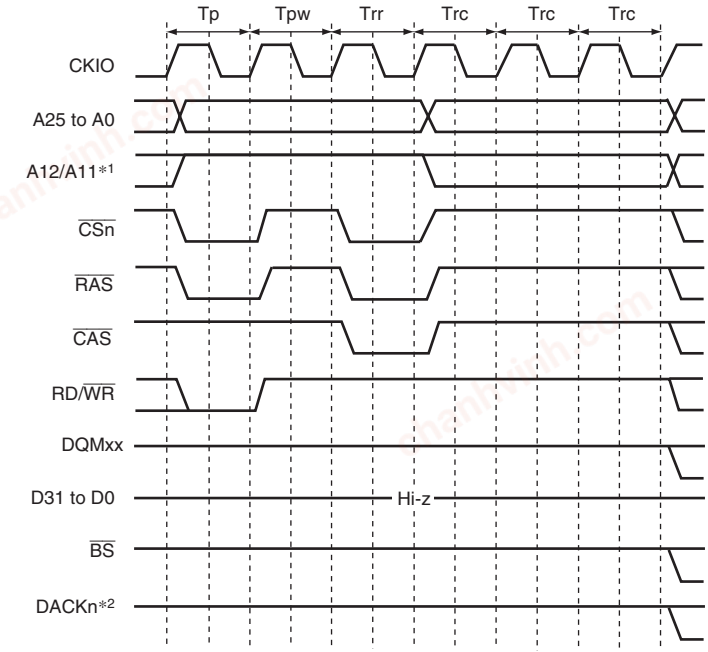

Notes: 1. Address pin to be connected to pin A10 of SDRAM.
2. The waveform for DACKn is when active low is specified.

Figure 10.27 Auto-Refresh Timing

chanhvinh.com

(b) Self-refreshing

Self-refresh mode is a kind of standby mode, in which the refresh timing and refresh addresses are generated within the SDRAM. Self-refreshing is activated by setting both the RMODE bit and the RFSH bit in SDCR to 1. After starting the self-refreshing, PALL command is issued in Tp cycle after the completion of the pre-charging bank. A SELF command is then issued after inserting idle cycles of which number is specified by the WTRP1 and WTRP0 bits in CS3WSR. SDRAM cannot be accessed while in the self-refresh state. Self-refresh mode is cleared by clearing the RMODE bit to 0. After self-refresh mode has been cleared, command issuance is disabled for the number of cycles specified by the WTRC1 and WTRC0 bits in CS3WCR.

Self-refresh timing is shown in figure 10.28. Settings must be made so that self-refresh clearing and data retention are performed correctly, and auto-refreshing is performed at the correct intervals. When self-refreshing is activated from the state in which auto-refreshing is set, auto-refreshing is restarted if the RFSH bit is set to 1 and the RMODE bit is cleared to 0 when self-refresh mode is cleared. If the transition from clearing of self-refresh mode to the start of auto-refreshing takes time, this time should be taken into consideration when setting the initial value of RTCNT. Making the RTCNT value 1 less than the RTCOR value will enable refreshing to be started immediately.

After self-refreshing has been set, the self-refresh state continues even if the chip standby state is entered using the LSI standby function, and is maintained even after recovery from standby mode due to an interrupt. Note that the necessary signals such as CKE must be driven even in standby state by setting the HIZCNT bit in CMNCR to 1.

When the multiplication rate for the PLL circuit is changed, the CKIO output will become unstable or will be fixed low. For details on the CKIO output, see section 5, Clock Pulse Generator. The contents of SDRAM can be retained by placing the SDRAM in the self-refresh state before changing the multiplication rate.

The self-refresh state is not cleared by a manual reset. In case of a power-on reset, the bus state controller's registers are initialized, and therefore the self-refresh state is cleared.

chanhvinh.com

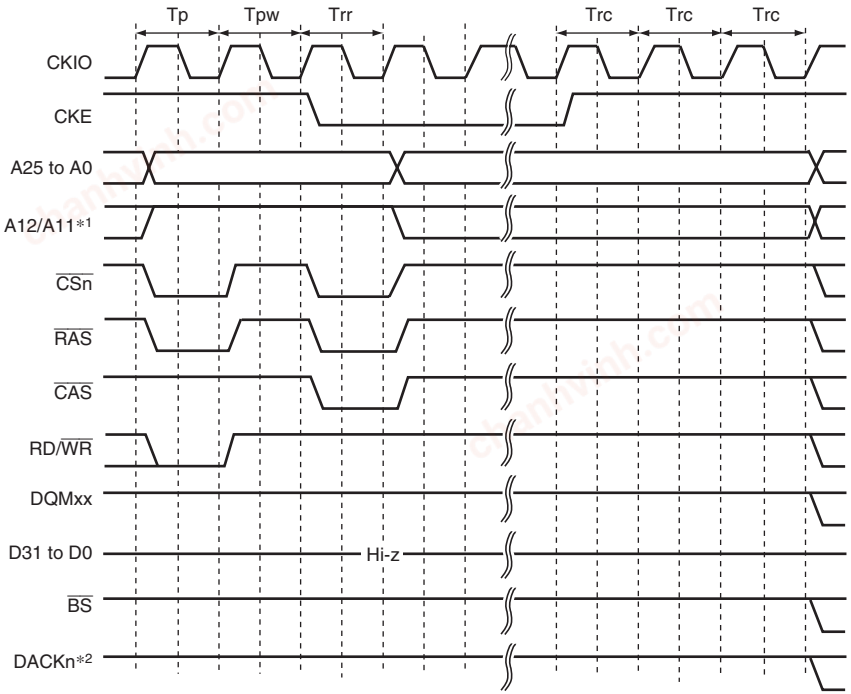

Notes: 1. Address pin to be connected to pin A10 of SDRAM.
2. The waveform for DACKn is when active low is specified.

Figure 10.28 Self-Refresh Timing

chanhvinh.com

(9) Relationship between Refresh Requests and Bus Cycles

If a refresh request occurs during bus cycle execution, the refresh cycle must wait for the bus cycle to be completed. If a refresh request occurs while the bus is released by the bus arbitration function, the refresh will not be executed until the bus mastership is acquired.

If the external bus does not return the bus for a period longer than the specified refresh interval, refresh cannot be executed and the SDRAM contents may be lost.

If a new refresh request occurs while waiting for the previous refresh request, the previous refresh request is deleted. To refresh correctly, a bus cycle longer than the refresh interval or the bus mastership occupation must be prevented from occurring.

If a bus mastership is requested during self-refresh, the bus will not be released until the refresh is completed.

chanhvinh.com

(10) Power-Down Mode

If the PDOWN bit in SDCR is set to 1, the SDRAM is placed in power-down mode by bringing the CKE signal to the low level in the non-access cycle. This power-down mode can effectively lower the power consumption in the non-access cycle. However, please note that if an access occurs in power-down mode, a cycle of overhead occurs because a cycle is needed to assert the CKE in order to cancel the power-down mode.

Figure 10.29 shows the access timing in power-down mode.

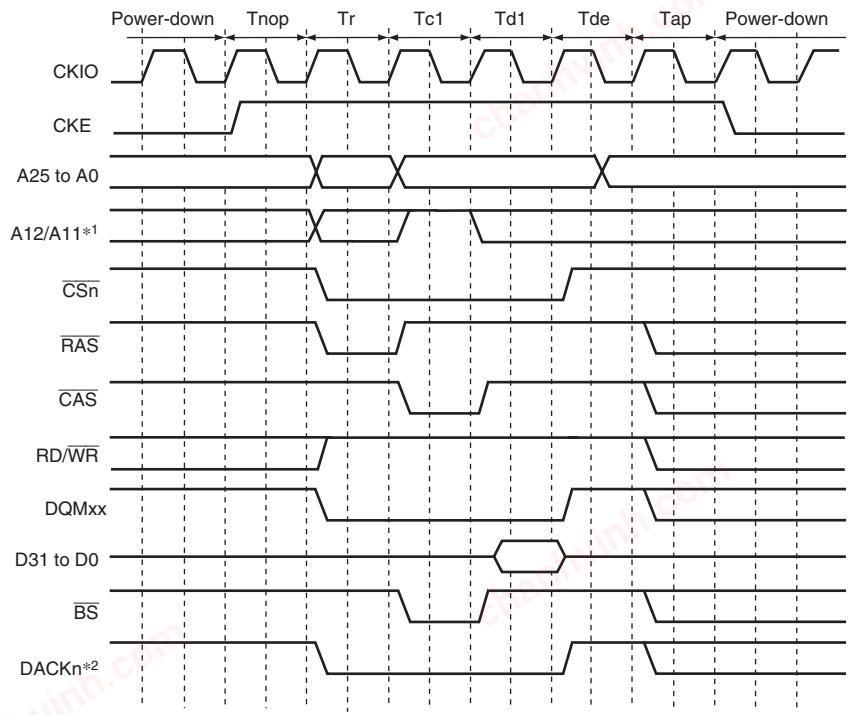

Notes: 1. Address pin to be connected to pin A10 of SDRAM.
2. The waveform for DACKn is when active low is specified.

Figure 10.29 Power-Down Mode Access Timing

chanhvinh.com

(11) Power-On Sequence

In order to use SDRAM, mode setting must first be made for SDRAM after the pose interval specified for the SDRAM to be used after powering on. The pose interval should be obtained by a power-on reset generating circuit or software.

To perform SDRAM initialization correctly, the registers of this module must first be set, followed by a write to the SDRAM mode register. In SDRAM mode register setting, the address signal value at that time is latched by a combination of the $\overline{CSn}$, $\overline{RAS}$, $\overline{CAS}$, and RD/$\overline{WR}$ signals. If the value to be set is X, the bus state controller provides for value X to be written to the SDRAM mode register by performing a word write to address H'FFFC4000 + X for area 2 SDRAM, and to address H'FFFC5000 + X for area 3 SDRAM. In this operation the data is ignored, but the mode write is performed as a byte-size access. To set burst read/single write or burst read/burst write (CAS latency 2 to 3, wrap type = sequential, and burst length 1) supported by the LSI, arbitrary data is written in a byte-size access to the addresses shown in table 10.18. In this time 0 is output at the external address pins of A12 or later.

Table 10.18 Access Address in SDRAM Mode Register Write

- Setting for Area 2

  Burst read/single write (burst length 1):

Data Bus Width	CAS Latency	Access Address	External Address Pin
16 bits	2	H'FFFC4440	H'0000440
	3	H'FFFC4460	H'0000460
32 bits	2	H'FFFC4880	H'0000880
	3	H'FFFC48C0	H'00008C0

  Burst read/burst write (burst length 1):

Data Bus Width	CAS Latency	Access Address	External Address Pin
16 bits	2	H'FFFC4040	H'0000040
	3	H'FFFC4060	H'0000060
32 bits	2	H'FFFC4080	H'0000080
	3	H'FFFC40C0	H'00000C0

chanhvinh.com

- Setting for Area 3

  Burst read/single write (burst length 1):

Data Bus Width	CAS Latency	Access Address	External Address Pin
16 bits	2	H'FFFC5440	H'0000440
	3	H'FFFC5460	H'0000460
32 bits	2	H'FFFC5880	H'0000880
	3	H'FFFC58C0	H'00008C0

  Burst read/burst write (burst length 1):

Data Bus Width	CAS Latency	Access Address	External Address Pin
16 bits	2	H'FFFC5040	H'0000040
	3	H'FFFC5060	H'0000060
32 bits	2	H'FFFC5080	H'0000080
	3	H'FFFC50C0	H'00000C0

Mode register setting timing is shown in figure 10.30. A PALL command (all bank pre-charge command) is firstly issued. A REF command (auto refresh command) is then issued 8 times. An MRS command (mode register write command) is finally issued. Idle cycles, of which number is specified by the WTRP1 and WTRP0 bits in CS3WCR, are inserted between the PALL and the first REF. Idle cycles, of which number is specified by the WTRC1 and WTRC0 bits in CS3WCR, are inserted between REF and REF, and between the 8th REF and MRS. One or more idle cycles are inserted between the MRS and a command to be issued next.

It is necessary to keep idle time of certain cycles for SDRAM before issuing PALL command after power-on. Refer to the manual of the SDRAM for the idle time to be needed. When the pulse width of the reset signal is longer than the idle time, mode register setting can be started immediately after the reset, but care should be taken when the pulse width of the reset signal is shorter than the idle time.

chanhvinh.com

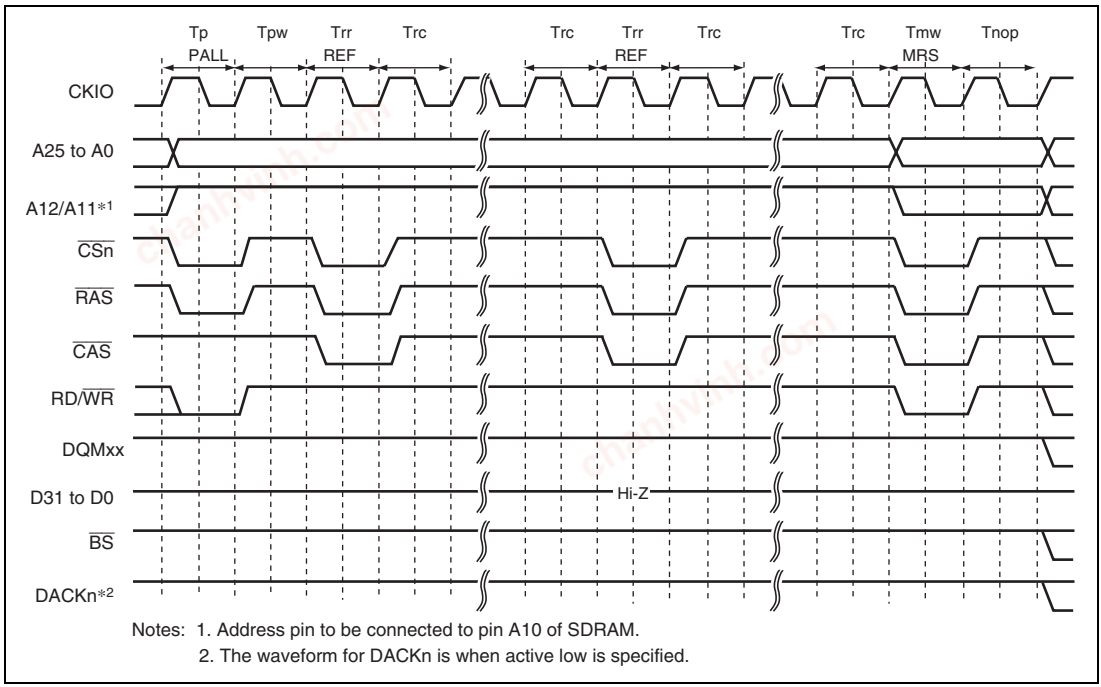

Notes: 1. Address pin to be connected to pin A10 of SDRAM.
2. The waveform for DACKn is when active low is specified.

Figure 10.30 SDRAM Mode Write Timing (Based on JEDEC)

chanhvinh.com

(12) Low-Power SDRAM

The low-power SDRAM can be accessed using the same protocol as the normal SDRAM.

The differences between the low-power SDRAM and normal SDRAM are that partial refresh takes place that puts only a part of the SDRAM in the self-refresh state during the self-refresh function, and that power consumption is low during refresh under user conditions such as the operating temperature. The partial refresh is effective in systems in which the data in a work area other than the specific area can be lost without severe repercussions. For details, please refer to the Data Sheet for the low-power SDRAM to be used.

The low-power SDRAM supports the extension mode register in addition to the mode registers as the normal SDRAM. This LSI supports issuing of the extension mode register write command (EMRS).

The EMRS command is issued according to the conditions specified in table below. For example, if data H'0YYYYYYY is written to address H'FFFC5XX0 in longword, the commands are issued to the CS3 space in the following sequence: PALL -> REF × 8 -> MRS -> EMRS. In this case, the MRS and EMRS issue addresses are H'0000XX0 and H'YYYYYYY, respectively. If data H'1YYYYYYY is written to address H'FFFC5XX0 in longword, the commands are issued to the CS3 space in the following sequence: PALL -> MRS -> EMRS.

Table 10.19 Output Addresses when EMRS Command Is Issued

Command to be Issued	Access Address	Access Data	Write Access Size	MRS Command Issue Address	EMRS Command Issue Address
CS2 MRS	H'FFFC4XX0	H'********	16 bits	H'0000XX0	—
CS3 MRS	H'FFFC5XX0	H'********	16 bits	H'0000XX0	—
CS2 MRS + EMRS (with refresh)	H'FFFC4XX0	H'0YYYYYYY	32 bits	H'0000XX0	H'YYYYYYY
CS3 MRS + EMRS (with refresh)	H'FFFC5XX0	H'0YYYYYYY	32 bits	H'0000XX0	H'YYYYYYY
CS2 MRS + EMRS (without refresh)	H'FFFC4XX0	H'1YYYYYYY	32 bits	H'0000XX0	H'YYYYYYY
CS3 MRS + EMRS (without refresh)	H'FFFC5XX0	H'1YYYYYYY	32 bits	H'0000XX0	H'YYYYYYY

chanhvinh.com

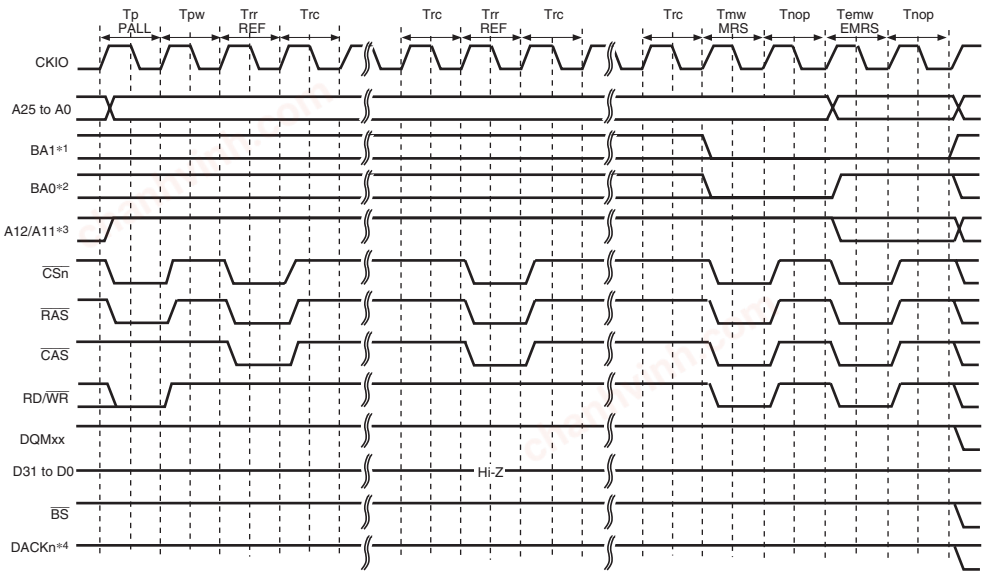

Notes: 1. Address pin to be connected to pin BA1 of SDRAM.
2. Address pin to be connected to pin BA0 of SDRAM.
3. Address pin to be connected to pin A10 of SDRAM.
4. The waveform for DACKn is when active low is specified.

Figure 10.31 EMRS Command Issue Timing

chanhvinh.com

- Deep power-down mode

  The low-power SDRAM supports the deep power-down mode as a low-power consumption mode. In the partial self-refresh function, self-refresh is performed on a specific area. In the deep power-down mode, self-refresh will not be performed on any memory area. This mode is effective in systems where all of the system memory areas are used as work areas.

If the RMODE bit in the SDCR is set to 1 while the DEEP and RFSH bits in the SDCR are set to 1, the low-power SDRAM enters the deep power-down mode. If the RMODE bit is cleared to 0, the CKE signal is pulled high to cancel the deep power-down mode. Before executing an access after returning from the deep power-down mode, the power-up sequence must be re-executed.

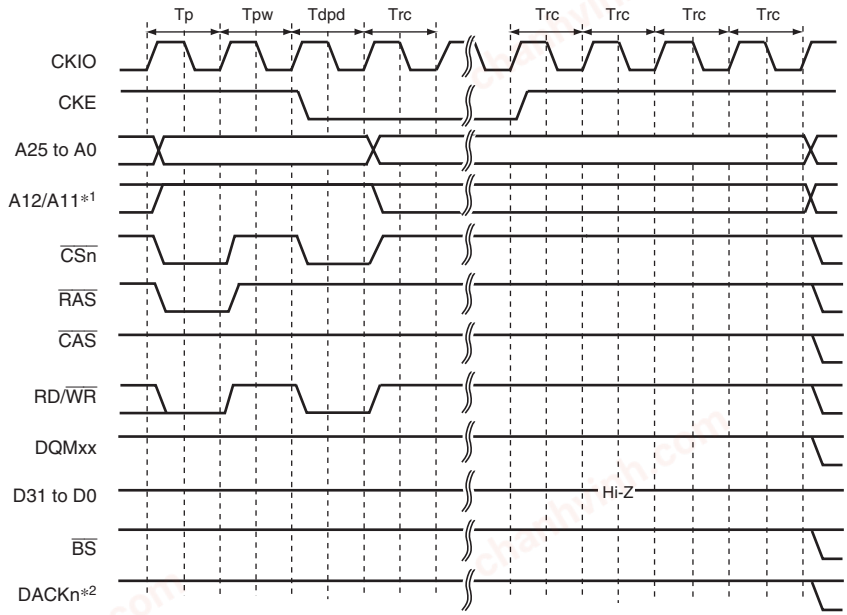

Notes: 1. Address pin to be connected to pin A10 of SDRAM.
2. The waveform for DACKn is when active low is specified.

Figure 10.32 Deep Power-Down Mode Transition Timing

chanhvinh.com

10.5.7 Burst ROM (Clocked Asynchronous) Interface

The burst ROM (clocked asynchronous) interface is used to access a memory with a high-speed read function using a method of address switching called the burst mode or page mode. In a burst ROM (clocked asynchronous) interface, basically the same access as the normal space is performed, but the 2nd and subsequent access cycles are performed only by changing the address, without negating the $\overline{RD}$ signal at the end of the 1st cycle. In the 2nd and subsequent access cycles, addresses are changed at the falling edge of the CKIO.

For the 1st access cycle, the number of wait cycles specified by the W3 to W0 bits in CSnWCR is inserted. For the 2nd and subsequent access cycles, the number of wait cycles specified by the BW1 and BW0 bits in CSnWCR is inserted.

In the access to the burst ROM (clocked asynchronous), the $\overline{BS}$ signal is asserted only to the first access cycle. An external wait input is valid only to the first access cycle.

In the single access or write access that does not perform the burst operation in the burst ROM (clocked asynchronous) interface, access timing is same as a normal space.

Table 10.20 lists a relationship between bus width, access size, and the number of bursts. Figure 10.33 shows a timing chart.

Table 10.20 Relationship between Bus Width, Access Size, and Number of Bursts

Bus Width	Access Size	CSnWCR. BST[1:0] Bits	Number of Bursts	Access Count
8 bits	8 bits	Not affected	1	1
	16 bits	Not affected	2	1
	32 bits	Not affected	4	1
	16 bytes	00	16	1
		01	4	4

chanhvinh.com

Bus Width	Access Size	CSnWCR. BST[1:0] Bits	Number of Bursts	Access Count
16 bits	8 bits	Not affected	1	1
	16 bits	Not affected	1	1
	32 bits	Not affected	2	1
	16 bytes	00	8	1
		01	2	4
		10*	4	2
			2, 4, 2	3
32 bits	8 bits	Not affected	1	1
	16 bits	Not affected	1	1
	32 bits	Not affected	1	1
	16 bytes	Not affected	4	1

Note: * When the bus width is 16 bits, the access size is 16 bits, and the BST[1:0] bits in CSnWCR are 10, the number of bursts and access count depend on the access start address. At address H'xxx0 or H'xxx8, 4-4 burst access is performed. At address H'xxx4 or H'xxxC, 2-4-2 burst access is performed.

chanhvinh.com

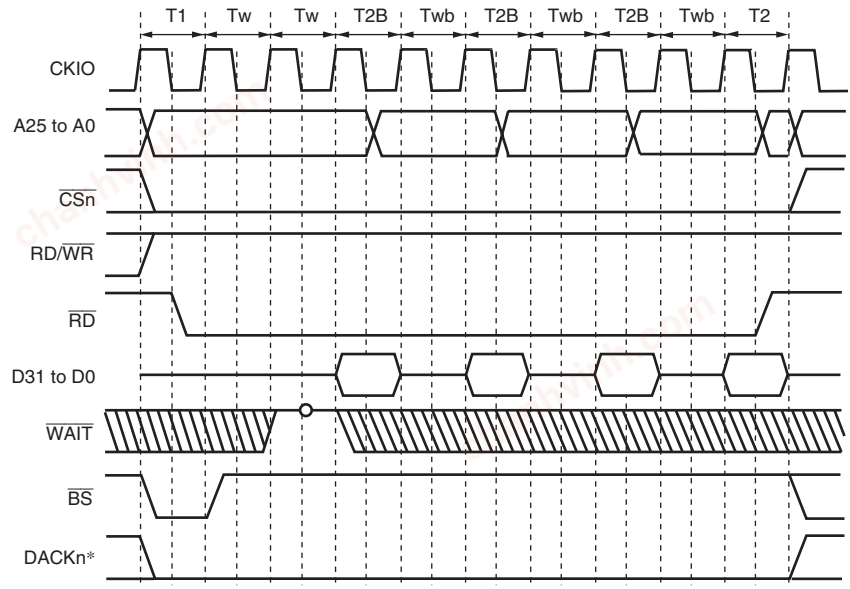

Note: * The waveform for DACKn is when active low is specified.

Figure 10.33 Burst ROM Access Timing (Clocked Asynchronous)
(Bus Width = 32 Bits, 16-Byte Transfer (Number of Burst 4), Wait Cycles Inserted in First Access = 2, Wait Cycles Inserted in Second and Subsequent Access Cycles = 1)

chanhvinh.com

10.5.8 SRAM Interface with Byte Selection

The SRAM interface with byte selection is a memory interface that outputs the byte selection signal ($\overline{\text{WEn}}$) in both read and write bus cycles. This interface has 16-bit data pins and accesses SRAMs having upper and lower byte selection pins, such as UB and LB.

When the BAS bit in CSnWCR is cleared to 0 (initial value), the write access timing of the SRAM interface with byte selection is the same as that for the normal space interface. While in read access of a byte-selection SRAM interface, the byte-selection signal is output from the $\overline{\text{WEn}}$ pin, which is different from that for the normal space interface. The basic access timing is shown in figure 10.34. In write access, data is written to the memory according to the timing of the byte-selection pin ($\overline{\text{WEn}}$). For details, please refer to the Data Sheet for the corresponding memory.

If the BAS bit in CSnWCR is set to 1, the $\overline{\text{WEn}}$ pin and RD/$\overline{\text{WR}}$ pin timings change. Figure 10.35 shows the basic access timing. In write access, data is written to the memory according to the timing of the write enable pin (RD/$\overline{\text{WR}}$). The data hold timing from RD/$\overline{\text{WR}}$ negation to data write must be acquired by setting the HW1 and HW0 bits in CSnWCR. Figure 10.36 shows the access timing when a software wait is specified.

chanhvinh.com

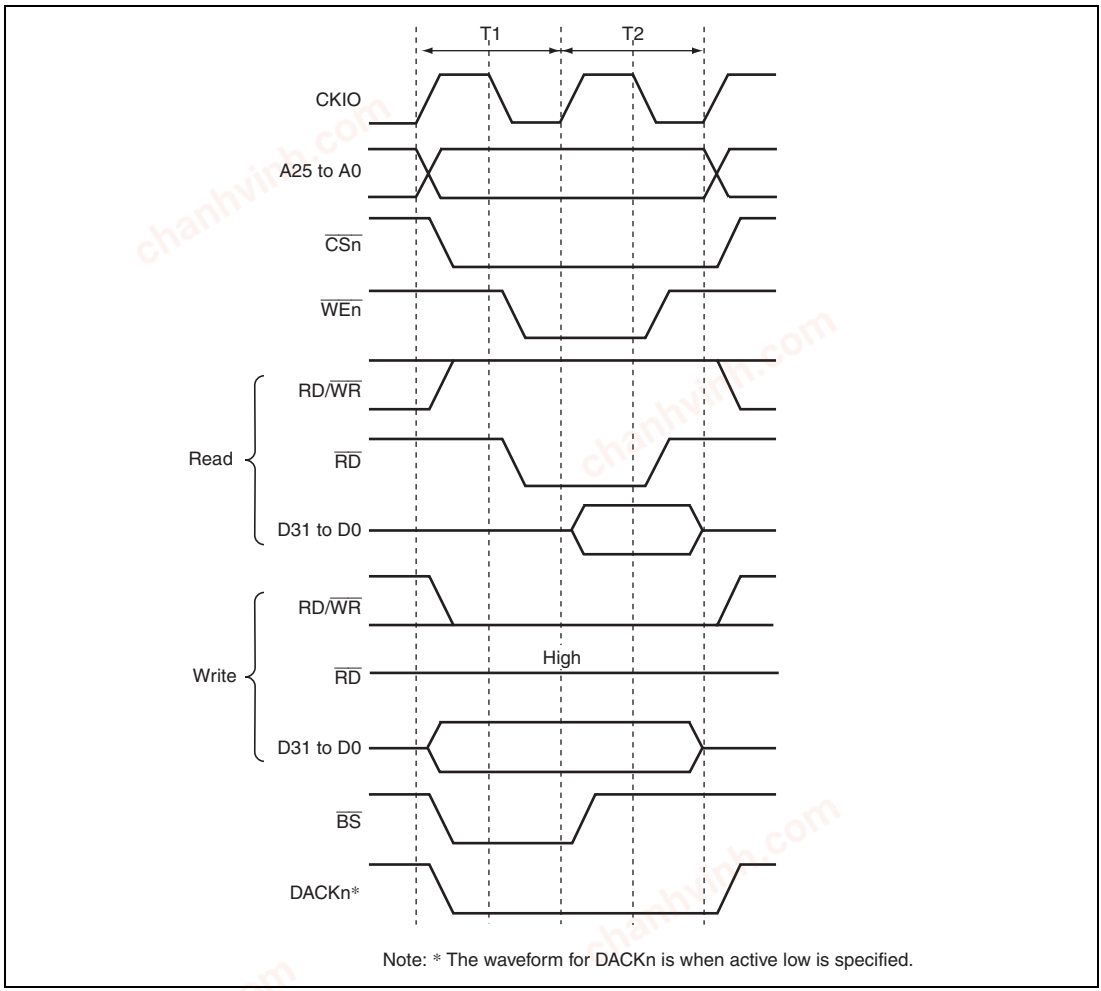

Figure 10.34 Basic Access Timing for SRAM with Byte Selection (BAS = 0)

chanhvinh.com

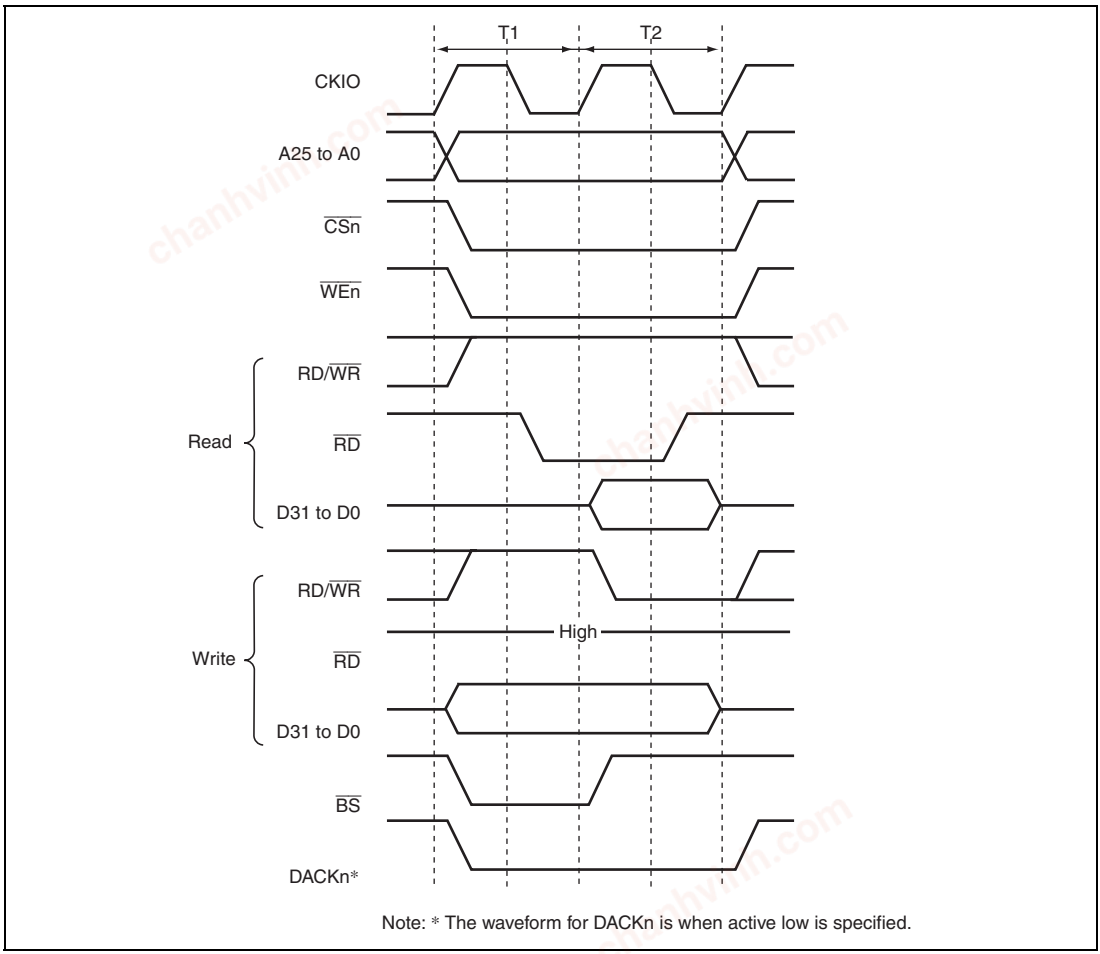

Figure 10.35 Basic Access Timing for SRAM with Byte Selection (BAS = 1)

chanhvinh.com

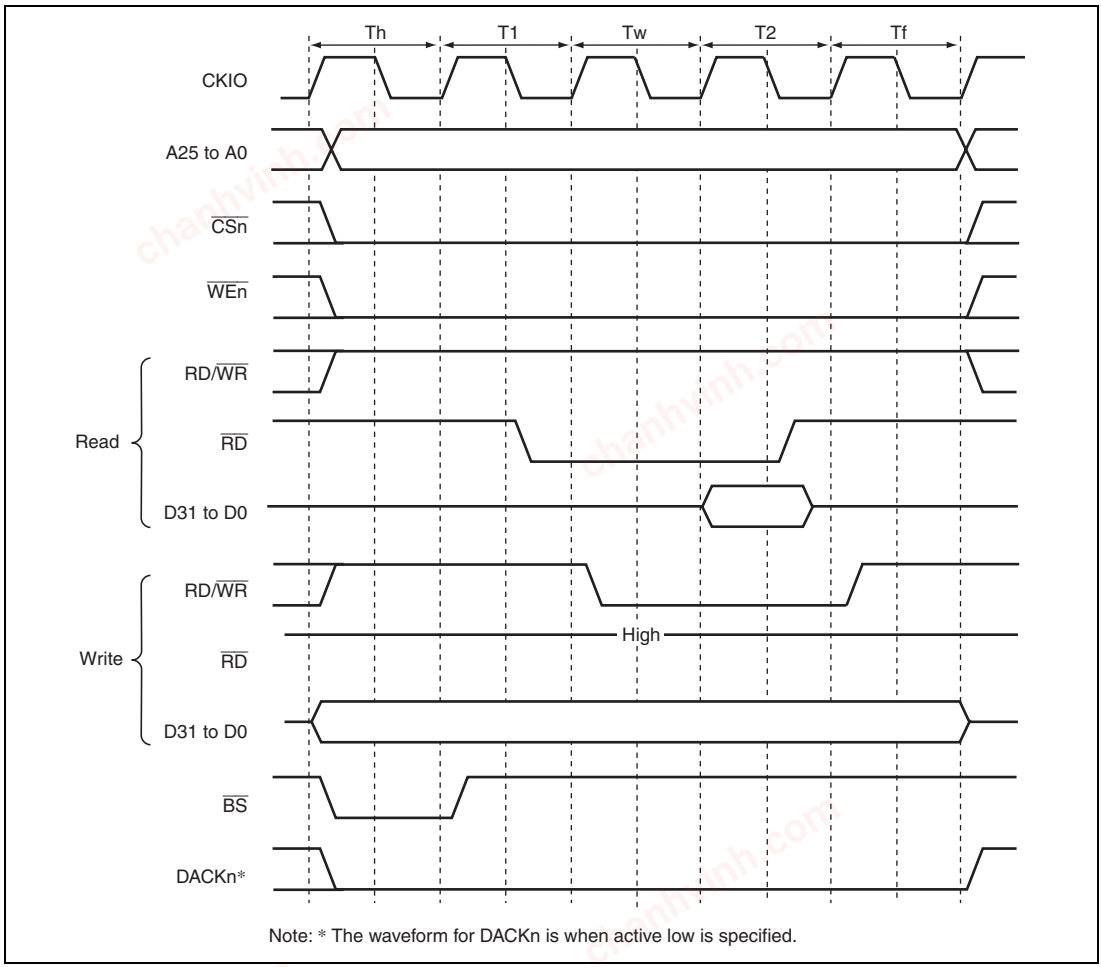

Figure 10.36 Wait Timing for SRAM with Byte Selection (BAS = 1) (SW[1:0] = 01, WR[3:0] = 0001, HW[1:0] = 01)

chanhvinh.com

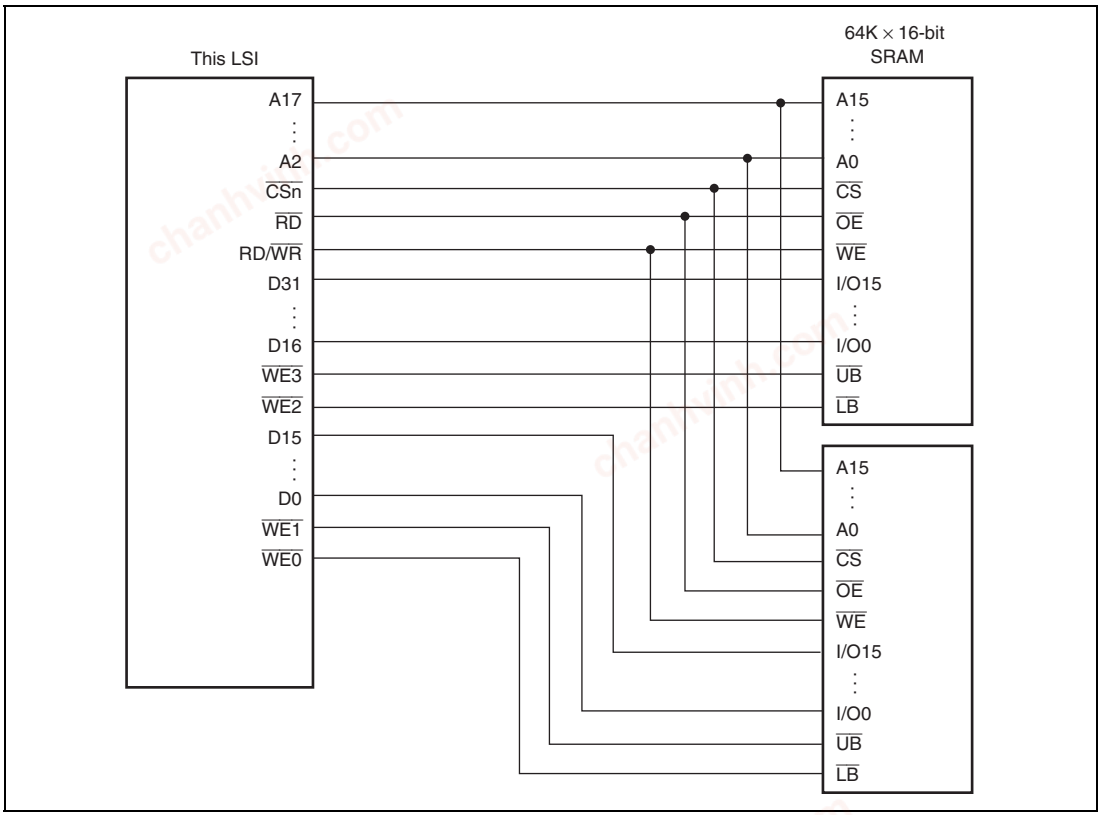

Figure 10.37 Example of Connection with 32-Bit Data-Width SRAM with Byte Selection

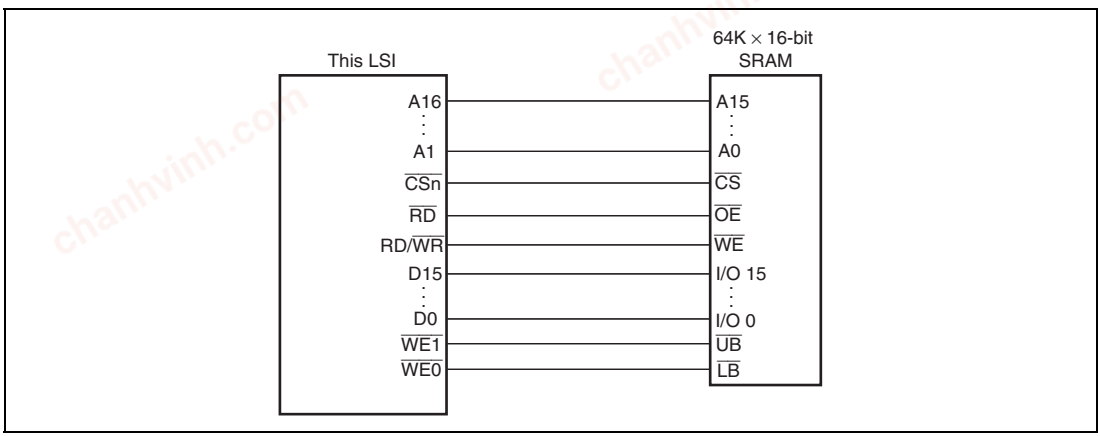

Figure 10.38 Example of Connection with 16-Bit Data-Width SRAM with Byte Selection

chanhvinh.com

10.5.9 PCMCIA Interface

With this LSI, area 5 can be used for the IC memory card and I/O card interface defined in the JEIDA specifications version 4.2 (PCMCIA2.1 Rev. 2.1) by specifying bits TYPE[2:0] in CS5BCR to B'101. In addition, the bits SA[1:0] in CS5WCR assign the upper or lower 32 Mbytes of area 5 to IC memory card or I/O card interface. For example, if the bits SA1 and SA0 in CS5WCR are set to 1 and cleared to 0, respectively, the upper 32 Mbytes of area 5 are used for IC memory card interface and the lower 32 Mbytes are used for I/O card interface.

When the PCMCIA interface is used, the bus size must be specified as 8 bits or 16 bits using the bits BSZ[1:0] in CS5BCR.

Figure 10.39 shows an example of connection between this LSI and a PCMCIA card. To enable hot swapping (insertion and removal of the PCMCIA card with the system power turned on), tri-state buffers must be connected between the bus interface of this LSI and the PCMCIA card.

In the JEIDA and PCMCIA standards, operation in big endian mode is not clearly defined. Consequently, the provided PCMCIA interface in big endian mode is available only for this LSI.

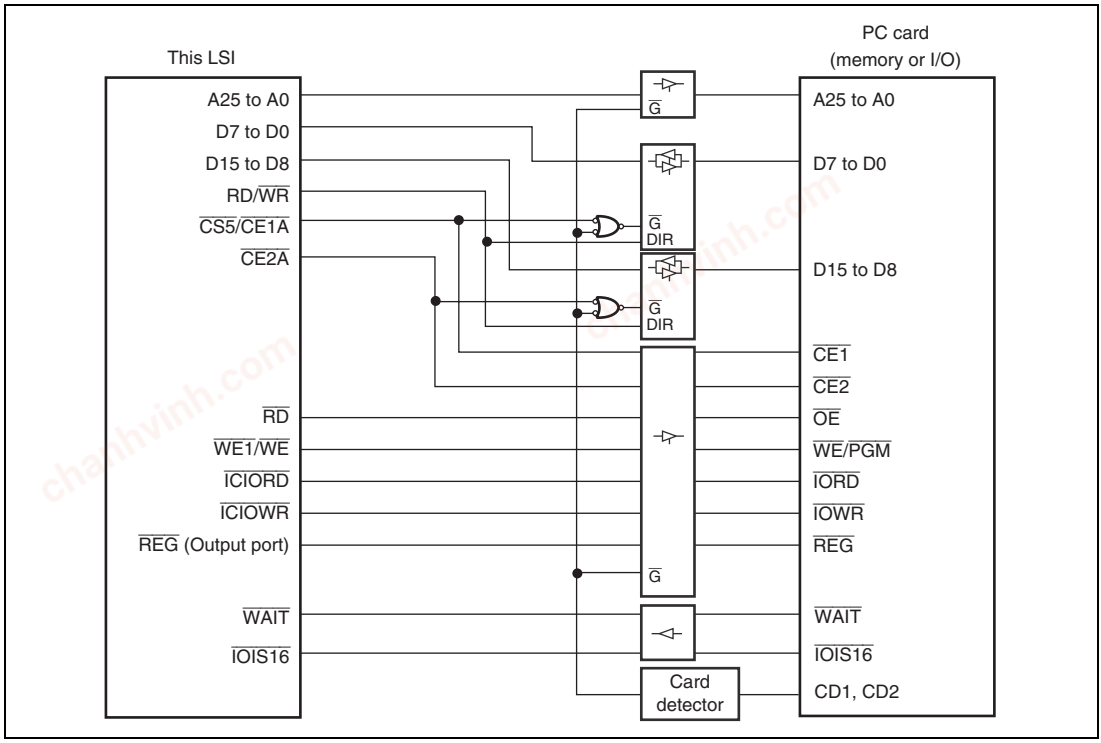

Figure 10.39 Example of PCMCIA Interface Connection

chanhvinh.com

(1) Basic Timing for Memory Card Interface

Figure 10.40 shows the basic timing of the PCMCIA IC memory card interface. When area 5 is specified as the PCMCIA interface, the bus is accessed with the IC memory card interface according to the SA[1:0] bit settings in CS5WCR. If the external bus frequency (CKIO) increases, the setup times and hold times for the address pins (A25 to A0), card enable signals ($\overline{\text{CE1A}}$, $\overline{\text{CE2A}}$), and write data (D15 to D0) to the $\overline{\text{RD}}$ and $\overline{\text{WE}}$ signals become insufficient. To prevent this error, this LSI enables the setup times and hold times for area 5 to be specified independently, using CS5WCR. In the PCMCIA interface, as in the normal space interface, a software wait or hardware wait using the $\overline{\text{WAIT}}$ pin can be inserted. Figure 10.41 shows the PCMCIA memory bus wait timing.

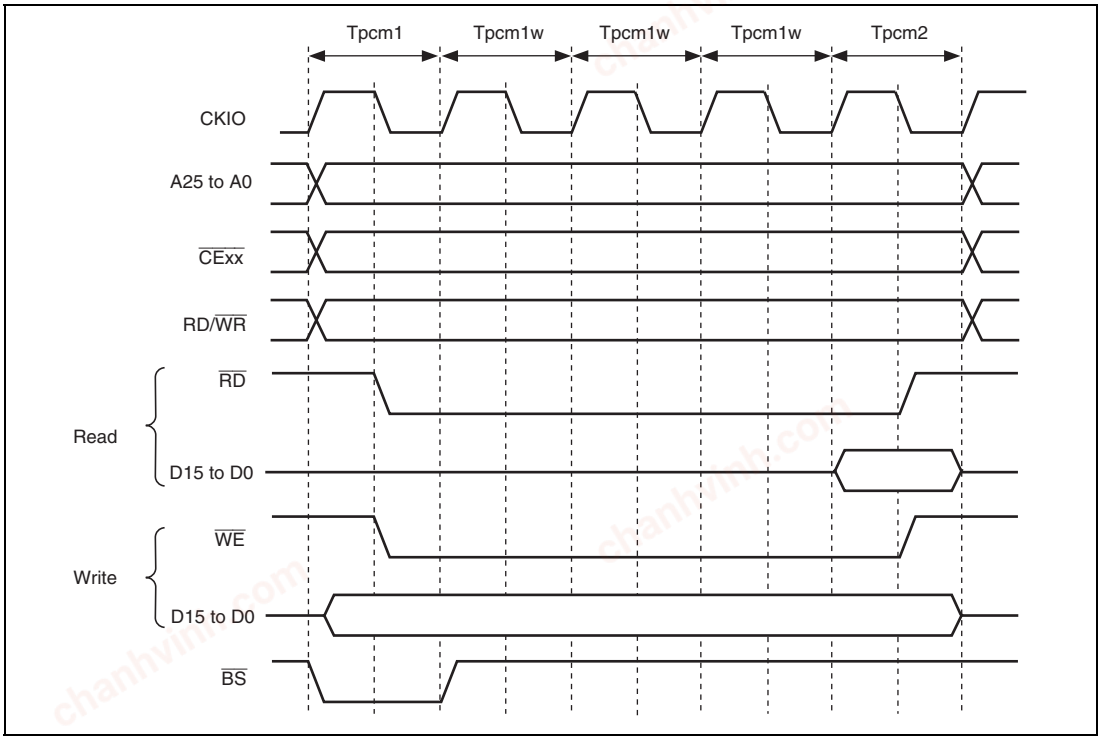

Figure 10.40 Basic Access Timing for PCMCIA Memory Card Interface

chanhvinh.com

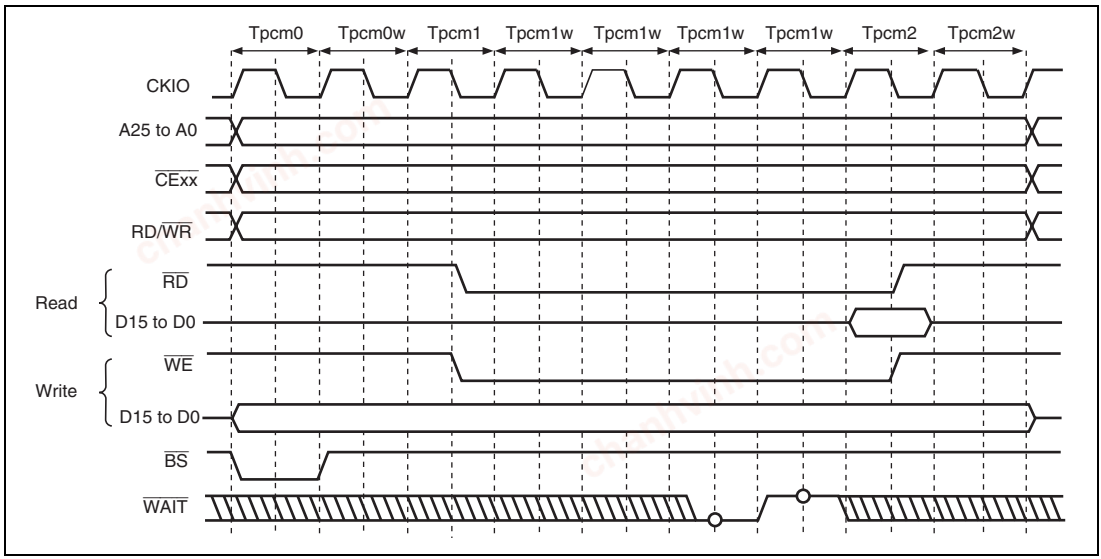

Figure 10.41 Wait Timing for PCMCIA Memory Card Interface (TED[3:0] = B'0010, PCW[3:0] = B'0000, TEH[3:0] = B'0001, Hardware Wait = 1)

A port is used to generate the $\overline{\text{REG}}$ signal that switches between the common memory and attribute memory. As shown in the example in figure 10.42, when the total memory space necessary for the common memory and attribute memory is 32 Mbytes or less, pin A24 can be used as the $\overline{\text{REG}}$ signal to allocate a 16-Mbyte common memory space and a 16-Mbyte attribute memory space.

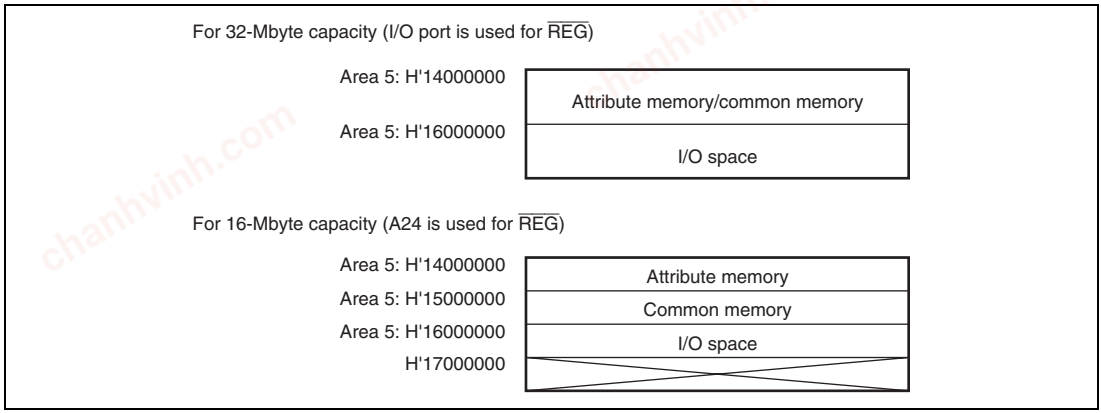

Figure 10.42 Example of PCMCIA Space Allocation (CS5WCR.SA[1:0] = B'10)

chanhvinh.com

(2) Basic Timing for I/O Card Interface

Figures 10.43 and 10.44 show the basic timing for the PCMCIA I/O card interface.

When accessing an I/O card through the PCMCIA interface, be sure to access the space as cache-disabled.

Switching between I/O card and IC memory card interfaces in the respective address spaces is accomplished by the SA[1:0] bit settings in CS5WCR.

The $\overline{\text{IOIS16}}$ pin can be used for dynamic adjustment of the width of the I/O bus in access to an I/O card via the PCMCIA interface when little endian mode has been selected. When the bus width of area 5 is set to 16 bits and the $\overline{\text{IOIS16}}$ signal is driven high during a cycle of word-unit access to the I/O card bus, the bus width will be recognized as 8 bits and only 8 bits of data will be accessed during the current cycle of the I/O card bus. Operation will automatically continue with access to the remaining 8 bits of data.

The $\overline{\text{IOIS16}}$ signal is sampled on falling edges of the CKIO in Tpci0 as well as all Tpci0w cycles for which the TED3 to TED0 bits are set to 1.5 cycles or more, and the $\overline{\text{CE2A}}$ signal is updated after 1.5 cycles of the CKIO signal from the sampling point of Tpci0. Ensure that the $\overline{\text{IOIS16}}$ signal is defined at all sampling points and does not change along the way.

Set the TED3 to TED0 bits to satisfy the requirement of the PC card in use with regard to setup timing from $\overline{\text{ICIORD}}$ or $\overline{\text{ICIOWR}}$ to $\overline{\text{CE1}}$.

The basic waveforms for dynamic bus-size adjustment are shown in figure 10.44.

Since the $\overline{\text{IOIS16}}$ signal is not supported in big endian mode, the $\overline{\text{IOIS16}}$ signal should be fixed to the low level when big endian mode has been selected.

chanhvinh.com

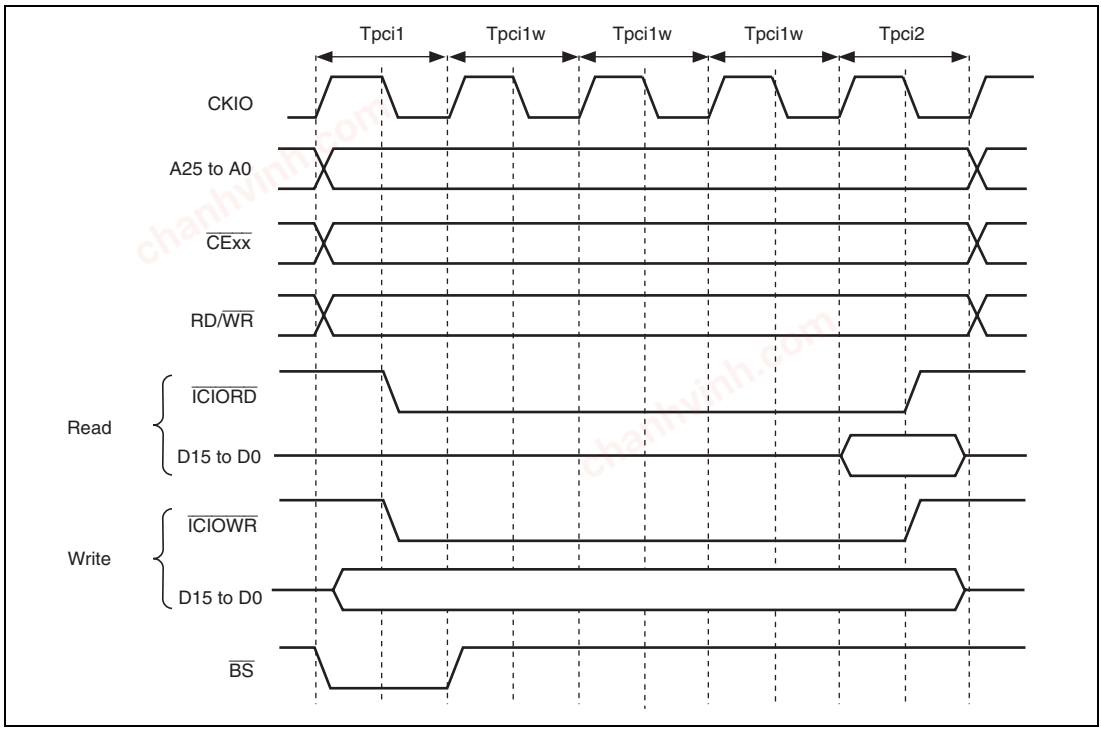

Figure 10.43 Basic Access Timing for PCMCIA I/O Card Interface

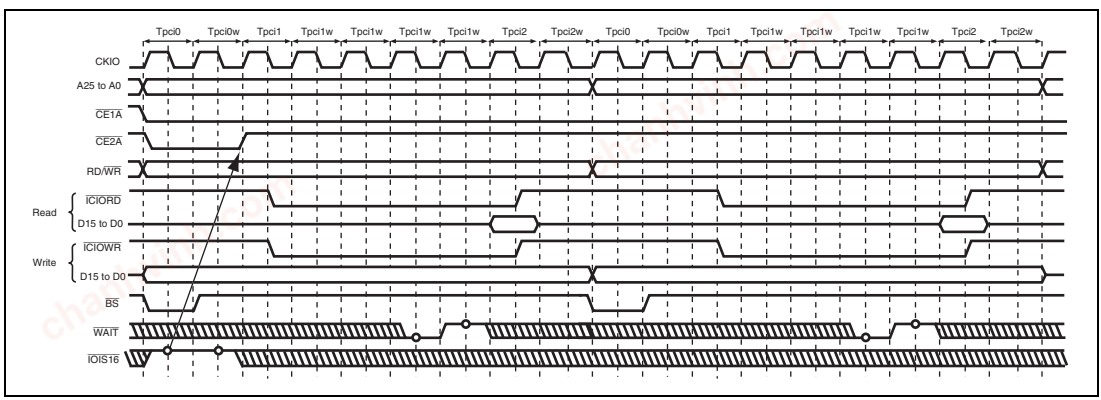

Figure 10.44 Dynamic Bus-Size Adjustment Timing for PCMCIA I/O Card Interface (TED[3:0] = B'0010, PCW[3:0] = B'0000, TEH[3:0] = B'0001, Hardware Wait = 1)

chanhvinh.com

10.5.10 Burst ROM (Clocked Synchronous) Interface

The burst ROM (clocked synchronous) interface is supported to access a ROM with a synchronous burst function at high speed. The burst ROM interface accesses the burst ROM in the same way as a normal space. This interface is valid only for area 0.

In the first access cycle, wait cycles are inserted. In this case, the number of wait cycles to be inserted is specified by the W3 to W0 bits in CS0WCR. In the second and subsequent cycles, the number of wait cycles to be inserted is specified by the BW1 and BW0 bits in CS0WCR.

While the burst ROM (clocked synchronous) is accessed, the $\overline{BS}$ signal is asserted only for the first access cycle and an external wait input is also valid for the first access cycle.

When the bus width is 16 bits, the burst length must be specified as 8. When the bus width is 32 bits, the burst length must be specified as 4. The burst ROM interface does not support the 8-bit bus width for the burst ROM.

The burst ROM interface performs burst operations for all read access. For example, in a longword access over a 16-bit bus, valid 16-bit data is read two times and invalid 16-bit data is read six times. These invalid data read cycles increase the memory access time and degrade the program execution speed and DMA transfer speed. To prevent this problem, it is recommended using a 16-byte read by cache fill in the cache-enabled spaces or 16-byte read by the DMA. The burst ROM interface performs write access in the same way as normal space access.

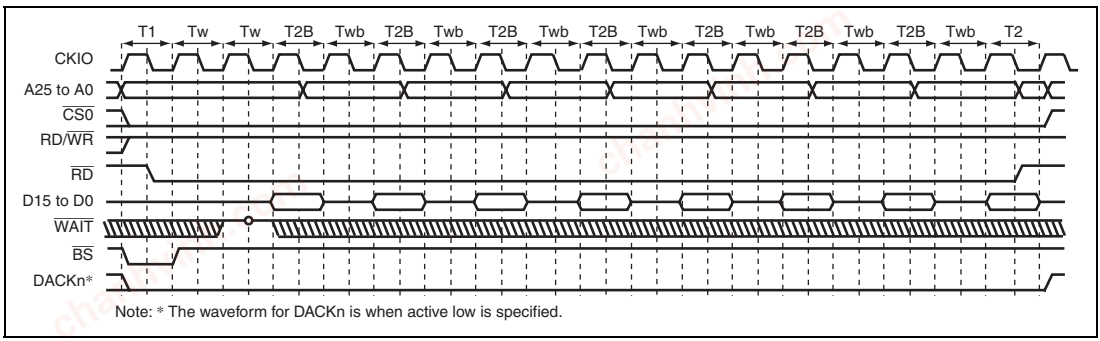

Figure 10.45 Burst ROM Access Timing (Clocked Synchronous)
(Burst Length = 8, Wait Cycles Inserted in First Access = 2,
Wait Cycles Inserted in Second and Subsequent Access Cycles = 1)

chanhvinh.com

10.5.11 Wait between Access Cycles

As the operating frequency of LSIs becomes higher, the off-operation of the data buffer often collides with the next data access when the read operation from devices with slow access speed is completed. As a result of these collisions, the reliability of the device is low and malfunctions may occur. A function that avoids data collisions by inserting idle (wait) cycles between continuous access cycles has been newly added.

The number of wait cycles between access cycles can be set by the WM bit in CSnWCR, bits IWW2 to IWW0, IWRWD2 to IWRWD0, IWRWS2 to IWRWS0, IWRRD2 to IWRRD0, and IWRRS2 to IWRRS 0 in CSnBCR, and bits DMAIW2 to DMAIW0 and DMAIWA in CMNCR. The conditions for setting the idle cycles between access cycles are shown below.

1. Continuous access cycles are write-read or write-write
2. Continuous access cycles are read-write for different spaces
3. Continuous access cycles are read-write for the same space
4. Continuous access cycles are read-read for different spaces
5. Continuous access cycles are read-read for the same space
6. Data output from an external device caused by DMA single address transfer is followed by data output from another device that includes this LSI (DMAIWA = 0)
7. Data output from an external device caused by DMA single address transfer is followed by any type of access (DMAIWA = 1)

For the specification of the number of idle cycles between access cycles described above, refer to the description of each register.

Besides the idle cycles between access cycles specified by the registers, idle cycles must be inserted to interface with the internal bus or to obtain the minimum pulse width for a multiplexed pin ($\overline{\text{WEn}}$). The following gives detailed information about the idle cycles and describes how to estimate the number of idle cycles.

The number of idle cycles on the external bus from $\overline{\text{CSn}}$ negation to $\overline{\text{CSn}}$ or $\overline{\text{CSm}}$ assertion is described below. Here, $\overline{\text{CSn}}$ and $\overline{\text{CSm}}$ also include $\overline{\text{CE2A}}$ for PCMCIA.

There are eight conditions that determine the number of idle cycles on the external bus as shown in table 10.21. The effects of these conditions are shown in figure 10.46.

chanhvinh.com

Table 10.21 Conditions for Determining Number of Idle Cycles

No.	Condition	Description	Range	Note
[1]	DMAIW[2:0] in CMNCR	These bits specify the number of idle cycles for DMA single address transfer. This condition is effective only for single address transfer and generates idle cycles after the access is completed.	0 to 12	When 0 is specified for the number of idle cycles, the DACK signal may be asserted continuously. This causes a discrepancy between the number of cycles detected by the device with DACK and the direct memory access controller transfer count, resulting in a malfunction.
[2]	IW***[2:0] in CSnBCR	These bits specify the number of idle cycles for access other than single address transfer. The number of idle cycles can be specified independently for each combination of the previous and next cycles. For example, in the case where reading CS1 space followed by reading other CS space, the bits IWRRD[2:0] in CS1BCR should be set to B'100 to specify six or more idle cycles. This condition is effective only for access cycles other than single address transfer and generates idle cycles after the access is completed.	0 to 12	Do not set 0 for the number of idle cycles between memory types which are not allowed to be accessed successively.
[3]	SDRAM-related bits in CSnWCR	These bits specify precharge completion and startup wait cycles and idle cycles between commands for SDRAM access. This condition is effective only for SDRAM access and generates idle cycles after the access is completed	0 to 3	Specify these bits in accordance with the specification of the target SDRAM.

chanhvinh.com

No.	Condition	Description	Range	Note
[4]	WM in CSnWCR	This bit enables or disables external $\overline{\text{WAIT}}$ pin input for the memory types other than SDRAM. When this bit is cleared to 0 (external $\overline{\text{WAIT}}$ enabled), one idle cycle is inserted to check the external $\overline{\text{WAIT}}$ pin input after the access is completed. When this bit is set to 1 (disabled), no idle cycle is generated.	0 or 1	
[5]	Read data transfer cycle	One idle cycle is inserted after a read access is completed. This idle cycle is not generated for the first or middle cycles in divided access cycles. This is neither generated when the HW[1:0] bits in CSnWCR are not B'00.	0 or 1	One idle cycle is always generated after a read cycle with SDRAM or PCMCIA interface.
[6]	Internal bus idle cycles, etc.	External bus access requests from the CPU or the direct memory access controller and their results are passed through the internal bus. The external bus enters idle state during internal bus idle cycles or while a bus other than the external bus is being accessed. This condition is not effective for divided access cycles, which are generated by the bus state controller when the access size is larger than the external data bus width.	0 or larger	The number of internal bus idle cycles may not become 0 depending on the Iϕ:Bϕ:CKIOϕ clock ratio. Tables 10.22 and 10.23 show the relationship between the clock ratio and the minimum number of internal bus idle cycles.

chanhvinh.com

No.	Condition	Description	Range	Note
[7]	Write data wait cycles	During write access, a write cycle is executed on the external bus only after the write data becomes ready. This write data wait period generates idle cycles before the write cycle. Note that when the previous cycle is a write cycle and the internal bus idle cycles are shorter than the previous write cycle, write data can be prepared in parallel with the previous write cycle and therefore, no idle cycle is generated (write buffer effect).	0 or 1	For write → write or write → read access cycles, successive access cycles without idle cycles are frequently available due to the write buffer effect described in the left column. If successive access cycles without idle cycles are not allowed, specify the minimum number of idle cycles between access cycles through CSnBCR.
[8]	Idle cycles between different memory types	To ensure the minimum pulse width on the signal-multiplexed pins, idle cycles may be inserted before access after memory types are switched. For some memory types, idle cycles are inserted even when memory types are not switched.	0 to 2	The number of idle cycles depends on the target memory types. See table 10.24.

In the above conditions, a total of four conditions, that is, condition [1] or [2] (either one is effective), condition [3] or [4] (either one is effective), a set of conditions [5] to [7] (these are generated successively, and therefore the sum of them should be taken as one set of idle cycles), and condition [8] are generated at the same time. The maximum number of idle cycles among these four conditions become the number of idle cycles on the external bus. To ensure the minimum idle cycles, be sure to make register settings for condition [1] or [2].

chanhvinh.com

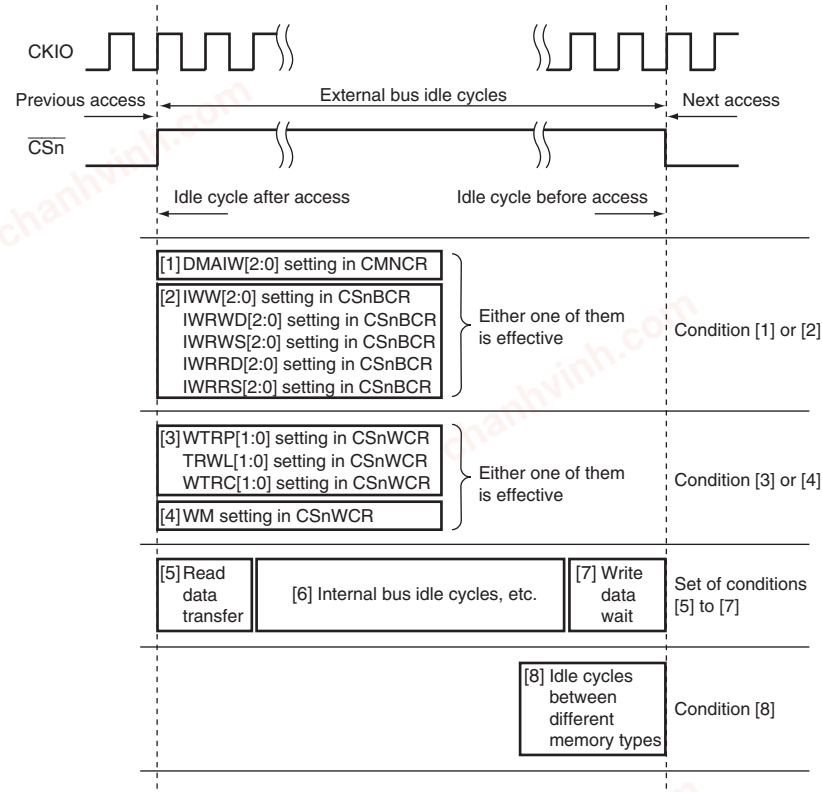

Note: A total of four conditions (condition [1] or [2], condition [3] or [4], a set of conditions [5] to [7], and condition [8]) generate idle cycle at the same time. Accordingly, the maximum number of cycles among these four conditions become the number of idle cycles.

Figure 10.46 Idle Cycle Conditions

Table 10.22 Minimum Number of Idle Cycles on Internal Bus (CPU Operation)

	Clock Ratio (Iϕ:Bϕ:CKIOϕ)				
CPU Operation	**4:2:1**	**4:1:1**	**2:2:1**	**2:1:1**	**1:1:1**
Write → write	1	2	2	2	3
Write → read	0	0	0	0	0
Read → write	1	2	2	2	3
Read → read	0	0	1	0	1

chanhvinh.com

Table 10.23 Minimum Number of Idle Cycles on Internal Bus (Direct Memory Access Controller Operation)

		Clock Ratio (Bϕ:CKIOϕ)	
Transfer Mode	**Read/Write Operation**	**2:1**	**1:1**
Dual address	Write → write*[1]	0	0
	Write → read	0	0
	Read → write	0	0
	Read → read*[1]	0	0
Single address (level detection for DREQ)*[2]	Write → write	3	6
	Read → read	2	5
Single address (edge detection for DREQ)*[2]	Write → write	0	1
	Read → read	1	2

Notes: 1. The write → write and read → read operations in dual address mode indicate that transfer is divided up into more than one transfer cycle for execution.

2. In single address mode, "write" means transfer from a device with DACK to an external memory and "read" means transfer from an external memory to a device with DACK.

Table 10.24 Number of Idle Cycles Inserted between Access Cycles to Different Memory Types

	Next Cycle							
Previous Cycle	**SRAM**	**Burst ROM (Asynchronous)**	**MPX-I/O**	**Byte SRAM (BAS = 0)**	**Byte SRAM (BAS = 1)**	**SDRAM**	**PCMCIA**	**Burst ROM (Synchronous)**
SRAM	0	0	1	0	1	1	0	0
Burst ROM (asynchronous)	0	0	1	0	1	1	0	0
MPX-I/O	1	1	0	1	1	1	1	1
Byte SRAM (BAS = 0)	0	0	1	0	1	1	0	0
Byte SRAM (BAS = 1)	1	1	2	1	0	0	1	1
SDRAM	1	1	2	1	0	0	1	1
PCMCIA	0	0	1	0	1	1	0	0
Burst ROM (synchronous)	0	0	1	0	1	1	0	0

chanhvinh.com

Figure 10.47 shows sample estimation of idle cycles between access cycles. In the actual operation, the idle cycles may become shorter than the estimated value due to the write buffer effect or may become longer due to internal bus idle cycles caused by stalling in the pipeline due to CPU instruction execution or CPU register conflicts. Please consider these errors when estimating the idle cycles.

Sample Estimation of Idle Cycles between Access Cycles

This example estimates the idle cycles for data transfer from the CS1 space to CS2 space by CPU access. Transfer is repeated in the following order: CS1 read → CS1 read → CS2 write → CS2 write → CS1 read → ...

- Conditions

  The bits for setting the idle cycles between access cycles in CS1BCR and CS2BCR are all set to 0.
  In CS1WCR and CS2WCR, the WM bit is set to 1 (external $\overline{\text{WAIT}}$ pin disabled) and the HW[1:0] bits are set to 00 (CS negation is not extended).
  Iϕ:Bϕ:CKIOϕ is set to 4:1:1, and no other processing is done during transfer.
  For both the CS1 and CS2 spaces, normal SRAM devices are connected, the bus width is 32 bits, and access size is also 32 bits.

The idle cycles generated under each condition are estimated for each pair of access cycles. In the following table, R indicates a read cycle and W indicates a write cycle.

Condition	R → R	R → W	W → W	W → R	Note
[1] or [2]	0	0	0	0	CSnBCR is set to 0.
[3] or [4]	0	0	0	0	The WM bit is set to 1.
[5]	1	1	0	0	Generated after a read cycle.
[6]	0	2	2	0	See the Iϕ:Bϕ:CKIOϕ = 4:1:1 columns in table 10.22.
[7]	0	1	0	0	No idle cycle is generated for the second time due to the write buffer effect.
[5] + [6] + [7]	1	4	2	0	
[8]	0	0	0	0	Value for SRAM → SRAM access
Estimated idle cycles	1	4	2	0	Maximum value among conditions [1] or [2], [3] or [4], [5] + [6] + [7], and [8]
Actual idle cycles	1	4	2	1	The estimated value does not match the actual value in the W → R cycles because the internal idle cycles due to condition [6] is estimated as 0 but actually an internal idle cycle is generated due to execution of a loop condition check instruction.

Figure 10.47 Comparison between Estimated Idle Cycles and Actual Value

chanhvinh.com

10.5.12 Bus Arbitration

The bus arbitration of this LSI has the bus mastership in the normal state and releases the bus mastership after receiving a bus request from another device.

Bus mastership is transferred at the boundary of bus cycles. Namely, bus mastership is released immediately after receiving a bus request when a bus cycle is not being performed. The release of bus mastership is delayed until the bus cycle is complete when a bus cycle is in progress. Even when from outside the LSI it looks like a bus cycle is not being performed, a bus cycle may be performing internally, started by inserting wait cycles between access cycles. Therefore, it cannot be immediately determined whether or not bus mastership has been released by looking at the $\overline{\text{CSn}}$ signal or other bus control signals. The states that do not allow bus mastership release are shown below.

1. 16-byte transfer because of a cache miss
2. During write-back operation for the cache
3. Between the read and write cycles of a TAS instruction
4. Multiple bus cycles generated when the data bus width is smaller than the access size (for example, between bus cycles when longword access is made to a memory with a data bus width of 8 bits)
5. 16-byte transfer by the direct memory access controller
6. 32-byte transfer by the OpenVG™-compliant Renesas graphics processor, image renderer, and video display controller 4
7. 128-byte transfer by the video display controller 4
8. Setting the BLOCK bit in CMNCR to 1
9. During access to the external flash memory by the NAND flash memory controller

Moreover, by using DPRTY bit in CMNCR, whether the bus mastership request is received or not can be selected during burst transfer by the direct memory access controller.

The LSI has the bus mastership until a bus request is received from another device. Upon acknowledging the assertion (low level) of the external bus request signal $\overline{\text{BREQ}}$, the LSI releases the bus at the completion of the current bus cycle and asserts the $\overline{\text{BACK}}$ signal. After the LSI acknowledges the negation (high level) of the $\overline{\text{BREQ}}$ signal that indicates the external device has released the bus, it negates the $\overline{\text{BACK}}$ signal and resumes the bus usage.

With the SDRAM interface, all bank pre-charge commands (PALLs) are issued when active banks exist and the bus is released after completion of a PALL command.

chanhvinh.com

The bus sequence is as follows. The address bus and data bus are placed in a high-impedance state synchronized with the rising edge of CKIO. The bus mastership enable signal is asserted 0.5 cycles after the above timing, synchronized with the falling edge of CKIO. The bus control signals ($\overline{BS}$, $\overline{CSn}$, $\overline{RAS}$, $\overline{CAS}$, CKE, DQMxx, $\overline{WEn}$, $\overline{RD}$, and RD/$\overline{WR}$) are placed in the high-impedance state at subsequent rising edges of CKIO. These bus control signals are driven high one or more cycles before they are placed in the high-impedance state. Bus request signals are sampled at the falling edge of CKIO. Note that CKE, $\overline{RAS}$, and $\overline{CAS}$ can be continued to be driven at the previous value even in the bus-released state by setting the HIZCNT bit in CMNCR.

The sequence for reclaiming the bus mastership from an external device is described below. 1.5 cycles after the negation of $\overline{BREQ}$ is detected at the falling edge of CKIO, the bus control signals are driven high. The bus acknowledge signal is negated at the next falling edge of the clock. The fastest timing at which actual bus cycles can be resumed after bus control signal assertion is at the rising edge of the CKIO where address and data signals are driven. Figure 10.48 shows the bus arbitration timing.

When it is necessary to refresh SDRAM while releasing the bus mastership, the bus mastership should be returned. If the bus mastership is not returned for a specified refreshing period or longer, the contents of SDRAM cannot be guaranteed because a refreshing cannot be executed.

While releasing the bus mastership, the SLEEP instruction (to enter sleep mode, deep standby mode, or software standby mode), as well as a manual reset, cannot be executed until the LSI obtains the bus mastership.

The $\overline{BREQ}$ input signal is ignored in software standby mode or deep standby mode and the $\overline{BACK}$ output signal is placed in the high impedance state. If the bus mastership request is required in this state, the bus mastership must be released by pulling down the $\overline{BACK}$ pin to enter software standby mode or deep standby mode.

The bus mastership release ($\overline{BREQ}$ signal for high level negation) after the bus mastership request ($\overline{BREQ}$ signal for low level assertion) must be performed after the bus usage permission ($\overline{BACK}$ signal for low level assertion). If the $\overline{BREQ}$ signal is negated before the $\overline{BACK}$ signal is asserted, only one cycle of the $\overline{BACK}$ signal is asserted depending on the timing of the $\overline{BREQ}$ signal to be negated and this may cause a bus contention between the external device and the LSI.

chanhvinh.com

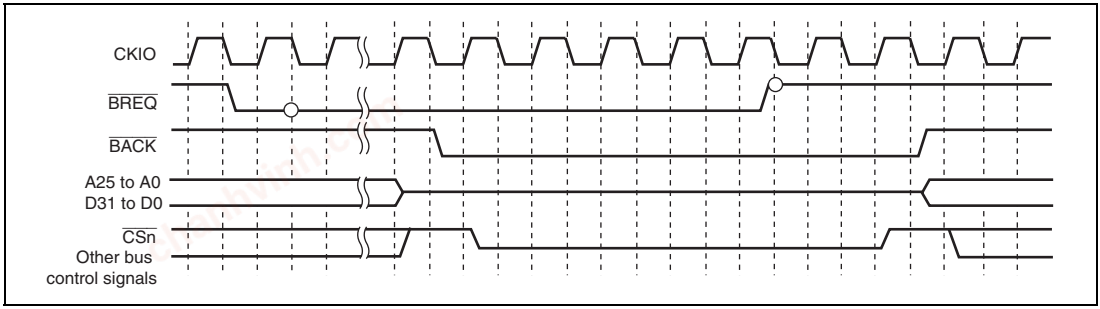

Figure 10.48 Bus Arbitration Timing

chanhvinh.com

10.5.13 Others

(1) Reset

This module can be initialized completely only at power-on reset. At power-on reset, all signals are negated and data output buffers are turned off regardless of the bus cycle state after the internal reset is synchronized with the internal clock. All control registers are initialized. In software standby, sleep, and manual reset, control registers of the bus state controller are not initialized. At manual reset, only the current bus cycle being executed is completed. Since the RTCNT continues counting up during manual reset signal assertion, a refresh request occurs to initiate the refresh cycle.

(2) Access from the Side of the LSI Internal Bus Master

There are three types of LSI internal buses: a CPU bus, internal bus, and peripheral bus. The CPU and cache memory are connected to the CPU bus. The bus state controller and internal bus masters other than the CPU are connected to the internal bus. Low-speed peripheral modules are connected to the peripheral bus. Internal memories other than the cache memory are connected bidirectionally to the CPU bus and internal bus. Access from the CPU bus to the internal bus is enabled but access from the internal bus to the CPU bus is disabled. This gives rise to the following problems.

On-chip bus masters such as the direct memory access controller other than the CPU can access internal memory other than the cache memory but cannot access the cache memory. If an on-chip bus master other than the CPU writes data to an external memory other than the cache, the contents of the external memory may differ from that of the cache memory. To prevent this problem, if the external memory whose contents is cached is written by an on-chip bus master other than the CPU, the corresponding cache memory should be purged by software.

In a cache-enabled space, if the CPU initiates read access, the cache is searched. If the cache stores data, the CPU latches the data and completes the read access. If the cache does not store data, the CPU performs four contiguous longword read cycles to perform cache fill operations via the internal bus. If a cache miss occurs in byte or word operand access or at a branch to an odd word boundary (4n + 2), the CPU performs four contiguous longword access cycles to perform a cache fill operation on the external interface. For a cache-disabled space, the CPU performs access according to the actual access addresses. For an instruction fetch to an even word boundary (4n), the CPU performs longword access. For an instruction fetch to an odd word boundary (4n + 2), the CPU performs word access.

For a read cycle of an on-chip peripheral module, the cycle is initiated through the internal bus and peripheral bus. The read data is sent to the CPU via the peripheral bus, internal bus, and CPU bus.

chanhvinh.com

In a write cycle for the cache-enabled space, the write cycle operation differs according to the cache write methods.

In write-back mode, the cache is first searched. If data is detected at the address corresponding to the cache, the data is then re-written to the cache. In the actual memory, data will not be re-written until data in the corresponding address is re-written. If data is not detected at the address corresponding to the cache, the cache is modified. In this case, data to be modified is first saved to the internal buffer, 16-byte data including the data corresponding to the address is then read, and data in the corresponding access of the cache is finally modified. Following these operations, a write-back cycle for the saved 16-byte data is executed.

In write-through mode, the cache is first searched. If data is detected at the address corresponding to the cache, the data is re-written to the cache simultaneously with the actual write via the internal bus. If data is not detected at the address corresponding to the cache, the cache is not modified but an actual write is performed via the internal bus.

Since the bus state controller incorporates a one-stage write buffer, it can execute an access via the internal bus before the previous external bus cycle is completed in a write cycle. If the on-chip module is read or written after the external low-speed memory is written, the on-chip module can be accessed before the completion of the external low-speed memory write cycle.

In read cycles, the CPU is placed in the wait state until read operation has been completed. To continue the process after the data write to the device has been completed, perform a dummy read to the same address to check for completion of the write before the next process to be executed.

The write buffer of the bus state controller functions in the same way for an access by a bus master other than the CPU such as the direct memory access controller. Accordingly, to perform dual address DMA transfers, the next read cycle is initiated before the previous write cycle is completed. Note, however, that if both the DMA source and destination addresses exist in external memory space, the next read cycle will not be initiated until the previous write cycle is completed.

Changing the registers in this module while the write buffer is operating may disrupt correct write access. Therefore, do not change the registers in this module immediately after a write access. If this change becomes necessary, do it after executing a dummy read of the write data.

chanhvinh.com

(3) On-Chip Peripheral Module Access

To access an on-chip module register, two or more peripheral module clock (P0ϕ or P1ϕ) cycles are required. Care must be taken in system design.

When the CPU writes data to the internal peripheral registers, the CPU performs the succeeding instructions without waiting for the completion of writing to registers.

For example, a case is described here in which the system is transferring to the software standby mode for power savings. To make this transition, the SLEEP instruction must be performed after setting the STBY bit in the STBCR1 register to 1. However a dummy read of the STBCR1 register is required before executing the SLEEP instruction. If a dummy read is omitted, the CPU executes the SLEEP instruction before the STBY bit is set to 1, thus the system enters sleep mode not software standby mode. A dummy read of the STBCR1 register is indispensable to complete writing to the STBY bit.

To reflect the change by internal peripheral registers while performing the succeeding instructions, execute a dummy read of registers to which write instruction is given and then perform the succeeding instructions.

(4) External Flash Memory Access by NAND Flash Memory Controller

In this product, a part of the external data bus is used also as data bus for the NAND flash memory controller. The use of the data bus is controlled by the NAND flash memory controller. Memory access by the NAND flash memory controller is started after the preceding access to the external device by this module is completed. If an access to the external device by this module occurs during the access by the NAND flash memory controller, it must wait until the completion of the access by the NAND flash memory controller.

When a memory access request by the NAND flash memory controller and an external bus release request conflict with each other, the request accepted first has higher priority. When the two requests occur at the same time, the access by the NAND flash memory controller has higher priority.

Auto-refresh operation and self-refresh operation are executed even during a memory access by the NAND flash memory controller.

chanhvinh.com

chanhvinh.com
chanhvinh.com
chanhvinh.com

chanhvinh.com

Section 11 Direct Memory Access Controller

Direct Memory Access Controller can be used in place of the CPU to perform high-speed transfers between external devices that have DACK (transfer request acknowledge signal), external memory, on-chip memory, memory-mapped external devices, and on-chip peripheral modules.

11.1 Features

- Number of channels: 16 channels (channels 0 to 15) selectable
  One channel (channel 0) can receive external requests.
- 4-Gbyte physical address space
- Data transfer unit is selectable: Byte, word (two bytes), longword (four bytes), and 16 bytes (longword × 4)
- Maximum transfer count: 16,777,216 transfers (24 bits)
- Address mode: Dual address mode and single address mode are supported.
- Transfer requests
  — External request
  — On-chip peripheral module request
  — Auto request
  The following modules can issue on-chip peripheral module requests.
  — Serial communication interface with FIFO: 16 sources
  — I^2C bus interface 3: eight sources
  — A/D converter: one source
  — Multi-function timer pulse unit 2: five sources
  — Compare match timer: two sources
  — USB 2.0 host/function module: two sources
  — NAND flash memory controller: two sources
  — Controller area network: three sources
  — Serial sound interface: seven sources
  — Sampling rate converter: six sources
  — Sound generator: four sources
  — Renesas SPDIF interface: two sources
  — CD-ROM decoder: one source
  — SD host interface: four sources
  — MMC host interface: two sources
  — Renesas serial peripheral interface: four sources

chanhvinh.com

— Renesas quad serial peripheral interface: four sources
— Clock synchronous serial I/O with FIFO: two sources
— Motor control PWM timer: two sources

- Selectable bus modes
  — Cycle steal mode (normal mode or intermittent mode)
  — Burst mode
- Selectable channel priority levels: The channel priority levels are selectable between two fixed modes.
- Interrupt request: An interrupt request can be sent to the CPU on completion of half- or full-data transfer. Through the HE and HIE bits in CHCR, an interrupt is specified to be issued to the CPU when half of the initially specified DMA transfer is completed.
- External request detection: There are following four types of DREQ input detection.
  — Low level detection
  — High level detection
  — Rising edge detection
  — Falling edge detection
- Transfer request acknowledge and transfer end signals: Active levels for DACK and TEND can be set independently.
- Support of reload functions in DMA transfer information registers: DMA transfer using the same information as the current transfer can be repeated automatically without specifying the information again. Modifying the reload registers during DMA transfer enables next DMA transfer to be done using different transfer information. The reload function can be enabled or disabled independently in each channel or reload register.

chanhvinh.com

Figure 11.1 shows the block diagram of this module.

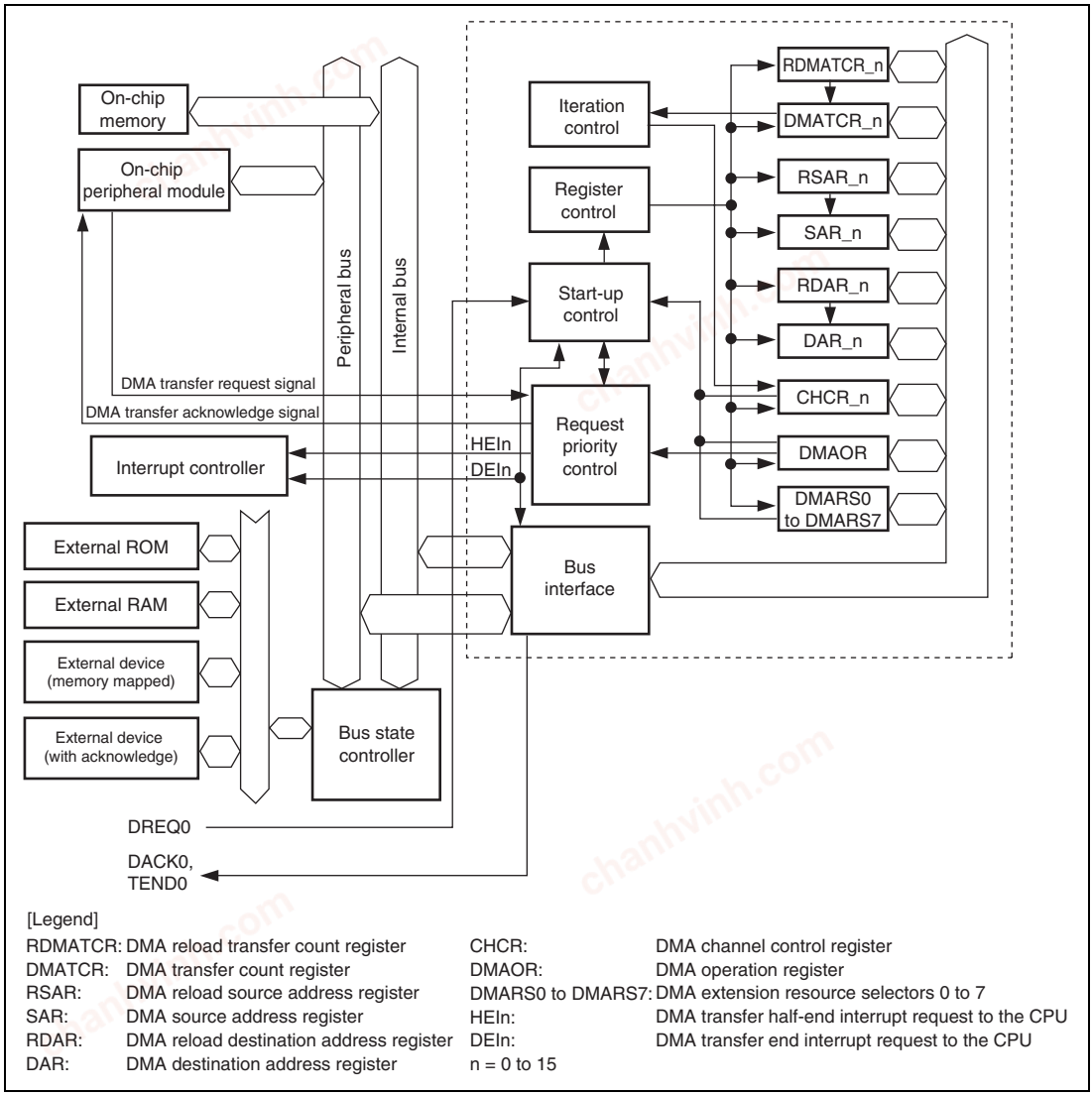

Figure 11.1 Block Diagram

chanhvinh.com

11.2 Input/Output Pins

Table 11.1 lists the pin configuration of this module. This module has pins for one channel (channel 0) for external bus use.

Table 11.1 Pin Configuration

Channel	Name	Abbreviation	I/O	Function
0	DMA transfer request	DREQ0	I	DMA transfer request input from an external device to channel 0
	DMA transfer request acknowledge	DACK0	O	DMA transfer request acknowledge output from channel 0 to an external device
	DMA transfer end	TEND0	O	DMA transfer end output for channel 0

chanhvinh.com

11.3 Register Descriptions

This module has the registers listed in table 11.2. There are four control registers and three reload registers for each channel, and one common control register is used by all channels. In addition, there is one extension resource selector per two channels. Each channel number is expressed in the register names, as in SAR_0 for SAR in channel 0.

Table 11.2 Register Configuration

Channel	Register Name	Abbreviation	R/W	Initial Value	Address	Access Size
0	DMA source address register_0	SAR_0	R/W	H'00000000	H'FFFE1000	16, 32
	DMA destination address register_0	DAR_0	R/W	H'00000000	H'FFFE1004	16, 32
	DMA transfer count register_0	DMATCR_0	R/W	H'00000000	H'FFFE1008	16, 32
	DMA channel control register_0	CHCR_0	R/W*1	H'00000000	H'FFFE100C	8, 16, 32
	DMA reload source address register_0	RSAR_0	R/W	H'00000000	H'FFFE1100	16, 32
	DMA reload destination address register_0	RDAR_0	R/W	H'00000000	H'FFFE1104	16, 32
	DMA reload transfer count register_0	RDMATCR_0	R/W	H'00000000	H'FFFE1108	16, 32
1	DMA source address register_1	SAR_1	R/W	H'00000000	H'FFFE1010	16, 32
	DMA destination address register_1	DAR_1	R/W	H'00000000	H'FFFE1014	16, 32
	DMA transfer count register_1	DMATCR_1	R/W	H'00000000	H'FFFE1018	16, 32
	DMA channel control register_1	CHCR_1	R/W*1	H'00000000	H'FFFE101C	8, 16, 32
	DMA reload source address register_1	RSAR_1	R/W	H'00000000	H'FFFE1110	16, 32
	DMA reload destination address register_1	RDAR_1	R/W	H'00000000	H'FFFE1114	16, 32
	DMA reload transfer count register_1	RDMATCR_1	R/W	H'00000000	H'FFFE1118	16, 32

chanhvinh.com

Channel	Register Name	Abbreviation	R/W	Initial Value	Address	Access Size
2	DMA source address register_2	SAR_2	R/W	H'00000000	H'FFFE1020	16, 32
	DMA destination address register_2	DAR_2	R/W	H'00000000	H'FFFE1024	16, 32
	DMA transfer count register_2	DMATCR_2	R/W	H'00000000	H'FFFE1028	16, 32
	DMA channel control register_2	CHCR_2	R/W*[1]	H'00000000	H'FFFE102C	8, 16, 32
	DMA reload source address register_2	RSAR_2	R/W	H'00000000	H'FFFE1120	16, 32
	DMA reload destination address register_2	RDAR_2	R/W	H'00000000	H'FFFE1124	16, 32
	DMA reload transfer count register_2	RDMATCR_2	R/W	H'00000000	H'FFFE1128	16, 32
3	DMA source address register_3	SAR_3	R/W	H'00000000	H'FFFE1030	16, 32
	DMA destination address register_3	DAR_3	R/W	H'00000000	H'FFFE1034	16, 32
	DMA transfer count register_3	DMATCR_3	R/W	H'00000000	H'FFFE1038	16, 32
	DMA channel control register_3	CHCR_3	R/W*[1]	H'00000000	H'FFFE103C	8, 16, 32
	DMA reload source address register_3	RSAR_3	R/W	H'00000000	H'FFFE1130	16, 32
	DMA reload destination address register_3	RDAR_3	R/W	H'00000000	H'FFFE1134	16, 32
	DMA reload transfer count register_3	RDMATCR_3	R/W	H'00000000	H'FFFE1138	16, 32

chanhvinh.com

Channel	Register Name	Abbreviation	R/W	Initial Value	Address	Access Size
4	DMA source address register_4	SAR_4	R/W	H'00000000	H'FFFE1040	16, 32
	DMA destination address register_4	DAR_4	R/W	H'00000000	H'FFFE1044	16, 32
	DMA transfer count register_4	DMATCR_4	R/W	H'00000000	H'FFFE1048	16, 32
	DMA channel control register_4	CHCR_4	R/W*1	H'00000000	H'FFFE104C	8, 16, 32
	DMA reload source address register_4	RSAR_4	R/W	H'00000000	H'FFFE1140	16, 32
	DMA reload destination address register_4	RDAR_4	R/W	H'00000000	H'FFFE1144	16, 32
	DMA reload transfer count register_4	RDMATCR_4	R/W	H'00000000	H'FFFE1148	16, 32
5	DMA source address register_5	SAR_5	R/W	H'00000000	H'FFFE1050	16, 32
	DMA destination address register_5	DAR_5	R/W	H'00000000	H'FFFE1054	16, 32
	DMA transfer count register_5	DMATCR_5	R/W	H'00000000	H'FFFE1058	16, 32
	DMA channel control register_5	CHCR_5	R/W*1	H'00000000	H'FFFE105C	8, 16, 32
	DMA reload source address register_5	RSAR_5	R/W	H'00000000	H'FFFE1150	16, 32
	DMA reload destination address register_5	RDAR_5	R/W	H'00000000	H'FFFE1154	16, 32
	DMA reload transfer count register_5	RDMATCR_5	R/W	H'00000000	H'FFFE1158	16, 32

chanhvinh.com

Channel	Register Name	Abbreviation	R/W	Initial Value	Address	Access Size
6	DMA source address register_6	SAR_6	R/W	H'00000000	H'FFFE1060	16, 32
	DMA destination address register_6	DAR_6	R/W	H'00000000	H'FFFE1064	16, 32
	DMA transfer count register_6	DMATCR_6	R/W	H'00000000	H'FFFE1068	16, 32
	DMA channel control register_6	CHCR_6	R/W*[1]	H'00000000	H'FFFE106C	8, 16, 32
	DMA reload source address register_6	RSAR_6	R/W	H'00000000	H'FFFE1160	16, 32
	DMA reload destination address register_6	RDAR_6	R/W	H'00000000	H'FFFE1164	16, 32
	DMA reload transfer count register_6	RDMATCR_6	R/W	H'00000000	H'FFFE1168	16, 32
7	DMA source address register_7	SAR_7	R/W	H'00000000	H'FFFE1070	16, 32
	DMA destination address register_7	DAR_7	R/W	H'00000000	H'FFFE1074	16, 32
	DMA transfer count register_7	DMATCR_7	R/W	H'00000000	H'FFFE1078	16, 32
	DMA channel control register_7	CHCR_7	R/W*[1]	H'00000000	H'FFFE107C	8, 16, 32
	DMA reload source address register_7	RSAR_7	R/W	H'00000000	H'FFFE1170	16, 32
	DMA reload destination address register_7	RDAR_7	R/W	H'00000000	H'FFFE1174	16, 32
	DMA reload transfer count register_7	RDMATCR_7	R/W	H'00000000	H'FFFE1178	16, 32

chanhvinh.com

Channel	Register Name	Abbreviation	R/W	Initial Value	Address	Access Size
8	DMA source address register_8	SAR_8	R/W	H'00000000	H'FFFE1080	16, 32
	DMA destination address register_8	DAR_8	R/W	H'00000000	H'FFFE1084	16, 32
	DMA transfer count register_8	DMATCR_8	R/W	H'00000000	H'FFFE1088	16, 32
	DMA channel control register_8	CHCR_8	R/W*1	H'00000000	H'FFFE108C	8, 16, 32
	DMA reload source address register_8	RSAR_8	R/W	H'00000000	H'FFFE1180	16, 32
	DMA reload destination address register_8	RDAR_8	R/W	H'00000000	H'FFFE1184	16, 32
	DMA reload transfer count register_8	RDMATCR_8	R/W	H'00000000	H'FFFE1188	16, 32
9	DMA source address register_9	SAR_9	R/W	H'00000000	H'FFFE1090	16, 32
	DMA destination address register_9	DAR_9	R/W	H'00000000	H'FFFE1094	16, 32
	DMA transfer count register_9	DMATCR_9	R/W	H'00000000	H'FFFE1098	16, 32
	DMA channel control register_9	CHCR_9	R/W*1	H'00000000	H'FFFE109C	8, 16, 32
	DMA reload source address register_9	RSAR_9	R/W	H'00000000	H'FFFE1190	16, 32
	DMA reload destination address register_9	RDAR_9	R/W	H'00000000	H'FFFE1194	16, 32
	DMA reload transfer count register_9	RDMATCR_9	R/W	H'00000000	H'FFFE1198	16, 32

chanhvinh.com

Channel	Register Name	Abbreviation	R/W	Initial Value	Address	Access Size
10	DMA source address register_10	SAR_10	R/W	H'00000000	H'FFFE10A0	16, 32
	DMA destination address register_10	DAR_10	R/W	H'00000000	H'FFFE10A4	16, 32
	DMA transfer count register_10	DMATCR_10	R/W	H'00000000	H'FFFE10A8	16, 32
	DMA channel control register_10	CHCR_10	R/W*1	H'00000000	H'FFFE10AC	8, 16, 32
	DMA reload source address register_10	RSAR_10	R/W	H'00000000	H'FFFE11A0	16, 32
	DMA reload destination address register_10	RDAR_10	R/W	H'00000000	H'FFFE11A4	16, 32
	DMA reload transfer count register_10	RDMATCR_10	R/W	H'00000000	H'FFFE11A8	16, 32
11	DMA source address register_11	SAR_11	R/W	H'00000000	H'FFFE10B0	16, 32
	DMA destination address register_11	DAR_11	R/W	H'00000000	H'FFFE10B4	16, 32
	DMA transfer count register_11	DMATCR_11	R/W	H'00000000	H'FFFE10B8	16, 32
	DMA channel control register_11	CHCR_11	R/W*1	H'00000000	H'FFFE10BC	8, 16, 32
	DMA reload source address register_11	RSAR_11	R/W	H'00000000	H'FFFE11B0	16, 32
	DMA reload destination address register_11	RDAR_11	R/W	H'00000000	H'FFFE11B4	16, 32
	DMA reload transfer count register_11	RDMATCR_11	R/W	H'00000000	H'FFFE11B8	16, 32

chanhvinh.com

Channel	Register Name	Abbreviation	R/W	Initial Value	Address	Access Size
12	DMA source address register_12	SAR_12	R/W	H'00000000	H'FFFE10C0	16, 32
	DMA destination address register_12	DAR_12	R/W	H'00000000	H'FFFE10C4	16, 32
	DMA transfer count register_12	DMATCR_12	R/W	H'00000000	H'FFFE10C8	16, 32
	DMA channel control register_12	CHCR_12	R/W*[1]	H'00000000	H'FFFE10CC	8, 16, 32
	DMA reload source address register_12	RSAR_12	R/W	H'00000000	H'FFFE11C0	16, 32
	DMA reload destination address register_12	RDAR_12	R/W	H'00000000	H'FFFE11C4	16, 32
	DMA reload transfer count register_12	RDMATCR_12	R/W	H'00000000	H'FFFE11C8	16, 32
13	DMA source address register_13	SAR_13	R/W	H'00000000	H'FFFE10D0	16, 32
	DMA destination address register_13	DAR_13	R/W	H'00000000	H'FFFE10D4	16, 32
	DMA transfer count register_13	DMATCR_13	R/W	H'00000000	H'FFFE10D8	16, 32
	DMA channel control register_13	CHCR_13	R/W*[1]	H'00000000	H'FFFE10DC	8, 16, 32
	DMA reload source address register_13	RSAR_13	R/W	H'00000000	H'FFFE11D0	16, 32
	DMA reload destination address register_13	RDAR_13	R/W	H'00000000	H'FFFE11D4	16, 32
	DMA reload transfer count register_13	RDMATCR_13	R/W	H'00000000	H'FFFE11D8	16, 32

chanhvinh.com

Channel	Register Name	Abbreviation	R/W	Initial Value	Address	Access Size
14	DMA source address register_14	SAR_14	R/W	H'00000000	H'FFFE10E0	16, 32
	DMA destination address register_14	DAR_14	R/W	H'00000000	H'FFFE10E4	16, 32
	DMA transfer count register_14	DMATCR_14	R/W	H'00000000	H'FFFE10E8	16, 32
	DMA channel control register_14	CHCR_14	R/W*[1]	H'00000000	H'FFFE10EC	8, 16, 32
	DMA reload source address register_14	RSAR_14	R/W	H'00000000	H'FFFE11E0	16, 32
	DMA reload destination address register_14	RDAR_14	R/W	H'00000000	H'FFFE11E4	16, 32
	DMA reload transfer count register_14	RDMATCR_14	R/W	H'00000000	H'FFFE11E8	16, 32
15	DMA source address register_15	SAR_15	R/W	H'00000000	H'FFFE10F0	16, 32
	DMA destination address register_15	DAR_15	R/W	H'00000000	H'FFFE10F4	16, 32
	DMA transfer count register_15	DMATCR_15	R/W	H'00000000	H'FFFE10F8	16, 32
	DMA channel control register_15	CHCR_15	R/W*[1]	H'00000000	H'FFFE10FC	8, 16, 32
	DMA reload source address register_15	RSAR_15	R/W	H'00000000	H'FFFE11F0	16, 32
	DMA reload destination address register_15	RDAR_15	R/W	H'00000000	H'FFFE11F4	16, 32
	DMA reload transfer count register_15	RDMATCR_15	R/W	H'00000000	H'FFFE11F8	16, 32

chanhvinh.com

Channel	Register Name	Abbreviation	R/W	Initial Value	Address	Access Size
Common	DMA operation register	DMAOR	R/W*[2]	H'0000	H'FFFE1200	8, 16
0 and 1	DMA extension resource selector 0	DMARS0	R/W	H'0000	H'FFFE1300	16
2 and 3	DMA extension resource selector 1	DMARS1	R/W	H'0000	H'FFFE1304	16
4 and 5	DMA extension resource selector 2	DMARS2	R/W	H'0000	H'FFFE1308	16
6 and 7	DMA extension resource selector 3	DMARS3	R/W	H'0000	H'FFFE130C	16
8 and 9	DMA extension resource selector 4	DMARS4	R/W	H'0000	H'FFFE1310	16
10 and 11	DMA extension resource selector 5	DMARS5	R/W	H'0000	H'FFFE1314	16
12 and 13	DMA extension resource selector 6	DMARS6	R/W	H'0000	H'FFFE1318	16
14 and 15	DMA extension resource selector 7	DMARS7	R/W	H'0000	H'FFFE131C	16

Notes: 1. For the HE and TE bits in CHCR_n, only 0 can be written to clear the flags after 1 is read.
2. For the AE and NMIF bits in DMAOR, only 0 can be written to clear the flags after 1 is read.

chanhvinh.com

11.3.1 DMA Source Address Registers (SAR)

The DMA source address registers (SAR) are 32-bit readable/writable registers that specify the source address of a DMA transfer. During a DMA transfer, these registers indicate the next source address. When the data of an external device with DACK is transferred in single address mode, SAR is ignored.

To transfer data in word (2-byte), longword (4-byte), or 16-byte unit, specify the address with 2-byte, 4-byte, or16-byte address boundary respectively.

Bit:	31	30	29	28	27	26	25	24	23	22	21	20	19	18	17	16
	-	-	-	-	-	-	-	-	-	-	-	-	-	-	-	-
Initial value:	0	0	0	0	0	0	0	0	0	0	0	0	0	0	0	0
R/W:	R/W	R/W	R/W	R/W	R/W	R/W	R/W	R/W	R/W	R/W	R/W	R/W	R/W	R/W	R/W	R/W

Bit:	15	14	13	12	11	10	9	8	7	6	5	4	3	2	1	0
	-	-	-	-	-	-	-	-	-	-	-	-	-	-	-	-
Initial value:	0	0	0	0	0	0	0	0	0	0	0	0	0	0	0	0
R/W:	R/W	R/W	R/W	R/W	R/W	R/W	R/W	R/W	R/W	R/W	R/W	R/W	R/W	R/W	R/W	R/W

11.3.2 DMA Destination Address Registers (DAR)

The DMA destination address registers (DAR) are 32-bit readable/writable registers that specify the destination address of a DMA transfer. During a DMA transfer, these registers indicate the next destination address. When the data of an external device with DACK is transferred in single address mode, DAR is ignored.

To transfer data in word (2-byte), longword (4-byte), or 16-byte unit, specify the address with 2-byte, 4-byte, or 16-byte address boundary respectively.

Bit:	31	30	29	28	27	26	25	24	23	22	21	20	19	18	17	16
	-	-	-	-	-	-	-	-	-	-	-	-	-	-	-	-
Initial value:	0	0	0	0	0	0	0	0	0	0	0	0	0	0	0	0
R/W:	R/W	R/W	R/W	R/W	R/W	R/W	R/W	R/W	R/W	R/W	R/W	R/W	R/W	R/W	R/W	R/W

Bit:	15	14	13	12	11	10	9	8	7	6	5	4	3	2	1	0
	-	-	-	-	-	-	-	-	-	-	-	-	-	-	-	-
Initial value:	0	0	0	0	0	0	0	0	0	0	0	0	0	0	0	0
R/W:	R/W	R/W	R/W	R/W	R/W	R/W	R/W	R/W	R/W	R/W	R/W	R/W	R/W	R/W	R/W	R/W

chanhvinh.com

11.3.3 DMA Transfer Count Registers (DMATCR)

The DMA transfer count registers (DMATCR) are 32-bit readable/writable registers that specify the number of DMA transfers. The transfer count is 1 when the setting is H'00000001, 16,777,215 when H'00FFFFFF is set, and 16,777,216 (the maximum) when H'00000000 is set. During a DMA transfer, these registers indicate the remaining transfer count.

The upper eight bits of DMATCR are always read as 0, and the write value should always be 0. To transfer data in 16 bytes, one 16-byte transfer (128 bits) counts one.

Bit:	31	30	29	28	27	26	25	24	23	22	21	20	19	18	17	16
	-	-	-	-	-	-	-	-	-	-	-	-	-	-	-	-
Initial value:	0	0	0	0	0	0	0	0	0	0	0	0	0	0	0	0
R/W:	R	R	R	R	R	R	R	R	R/W	R/W	R/W	R/W	R/W	R/W	R/W	R/W

Bit:	15	14	13	12	11	10	9	8	7	6	5	4	3	2	1	0
	-	-	-	-	-	-	-	-	-	-	-	-	-	-	-	-
Initial value:	0	0	0	0	0	0	0	0	0	0	0	0	0	0	0	0
R/W:	R/W	R/W	R/W	R/W	R/W	R/W	R/W	R/W	R/W	R/W	R/W	R/W	R/W	R/W	R/W	R/W

11.3.4 DMA Channel Control Registers (CHCR)

The DMA channel control registers (CHCR) are 32-bit readable/writable registers that control the DMA transfer mode.

The DO, AM, AL, DL, DS, and TL bits which specify the DREQ, DACK, and TEND external pin functions can be read and written to in channel 0, but they are reserved in channels 1 to 15.

Bit:	31	30	29	28	27	26	25	24	23	22	21	20	19	18	17	16
	TC	-	RLD SAR	RLD DAR	-	DAF	SAF	-	DO	TL	-	TE MASK	HE	HIE	AM	AL
Initial value:	0	0	0	0	0	0	0	0	0	0	0	0	0	0	0	0
R/W:	R/W	R	R/W	R/W	R	R/W	R/W	R	R/W	R/W	R	R/W	R/(W)*	R/W	R/W	R/W

Bit:	15	14	13	12	11	10	9	8	7	6	5	4	3	2	1	0
	DM[1:0]		SM[1:0]		RS[3:0]				DL	DS	TB	TS[1:0]		IE	TE	DE
Initial value:	0	0	0	0	0	0	0	0	0	0	0	0	0	0	0	0
R/W:	R/W	R/W	R/W	R/W	R/W	R/W	R/W	R/W	R/W	R/W	R/W	R/W	R/W	R/W	R/(W)*	R/W

Note: * Only 0 can be written to clear the flag after 1 is read.

chanhvinh.com

Bit	Bit Name	Initial Value	R/W	Description
31	TC	0	R/W	Transfer Count Mode Specifies whether to transmit data once or for the count specified in DMATCR by one transfer request. This function is valid only in on-chip peripheral module request mode. Note that when this bit is set to 0, the TB bit must not be set to 1 (burst mode). This bit (TC) must not be set to 1 if a module other than the multi-function timer pulse unit 2, the compare match timer, the controller area network, the CD-ROM decoder, or the A/D converter is selected as a source of transfer requests. 0: Transmits data once by one transfer request 1: Transmits data for the count specified in DMATCR by one transfer request
30	—	0	R	Reserved This bit is always read as 0. The write value should always be 0.
29	RLDSAR	0	R/W	SAR Reload Function ON/OFF Enables (ON) or disables (OFF) the function to reload SAR and DMATCR. 0: Disables (OFF) the function to reload SAR and DMATCR 1: Enables (ON) the function to reload SAR and DMATCR
28	RLDDAR	0	R/W	DAR Reload Function ON/OFF Enables (ON) or disables (OFF) the function to reload DAR and DMATCR. 0: Disables (OFF) the function to reload DAR and DMATCR 1: Enables (ON) the function to reload DAR and DMATCR
27	—	0	R	Reserved This bit is always read as 0. The write value should always be 0.

chanhvinh.com

Bit	Bit Name	Initial Value	R/W	Description
26	DAF	0	R/W	Fixed Destination Address 16-Byte Transfer Enabled when the transfer size (set in TS[1:0]) is 16 bytes and the destination address mode (set in DM[1:0]) is fixed address. 0: 16 bytes of data are transferred to the address. Transfer destination addresses for the writing of data are the addresses specified in the DAR, and that address plus H'0, H'4, H'8, and H'C. 1: Four bytes of data are transferred four times to the address specified in DAR. The transfer destination address for the writing of data is fixed to the address specified in the DAR. This function is only for use with the CD-ROM decoder, the USB 2.0 host/function module, the sampling rate converter, the Renesas quad serial peripheral interface, the SD host interface, and the MMC host interface.
25	SAF	0	R/W	Fixed Source Address 16-Byte Transfer Enabled when the transfer size (set in TS[1:0]) is 16 bytes and the source address mode (set in SM[1:0]) is fixed address. 0: 16 bytes of data are transferred from the address. Transfer source addresses for the reading of data are the addresses specified in the SAR, and that address plus H'0, H'4, H'8, and H'C. 1: Four bytes of data are transferred four times from the address specified in SAR. The transfer source address for the reading of data is fixed to the address specified in the SAR. This function is only for use with the CD-ROM decoder, the USB 2.0 host/function module, the sampling rate converter, the Renesas quad serial peripheral interface, the SD host interface, and the MMC host interface.
24	—	0	R	Reserved This bit is always read as 0. The write value should always be 0.

chanhvinh.com

Bit	Bit Name	Initial Value	R/W	Description
23	DO	0	R/W	DMA Overrun Selects whether DREQ is detected by overrun 0 or by overrun 1. This bit is valid only in level detection by CHCR_0. This bit is reserved in CHCR_1 to CHCR_15; it is always read as 0 and the write value should always be 0. 0: Detects DREQ by overrun 0 1: Detects DREQ by overrun 1
22	TL	0	R/W	Transfer End Level Specifies the TEND signal output is high active or low active. This bit is valid only in CHCR_0. This bit is reserved in CHCR_1 to CHCR_15; it is always read as 0 and the write value should always be 0. 0: Low-active output from TEND 1: High-active output from TEND
21	—	0	R	Reserved This bit is always read as 0. The write value should always be 0.
20	TEMASK	0	R/W	TE Set Mask Specifies that DMA transfer does not stop even if the TE bit is set to 1. If this bit is set to 1 along with the bit for SAR/DAR reload function, DMA transfer can be performed until the transfer request is cancelled. In auto request mode or when a rising/falling edge of the DREQ signal is detected in external request mode, the setting of this bit is ignored and DMA transfer stops if the TE bit is set to 1. Note that this function is enabled only when either the RLDSAR bit or the RLDDAR bit is set to 1. 0: DMA transfer stops if the TE bit is set 1: DMA transfer does not stop even if the TE bit is set

chanhvinh.com

Bit	Bit Name	Initial Value	R/W	Description
19	HE	0	R/(W)*	Half-End Flag This bit is set to 1 when the transfer count reaches half of the DMATCR value that was specified before transfer starts. If DMA transfer ends because of an NMI interrupt, a DMA address error, or clearing of the DE bit or the DME bit in DMAOR before the transfer count reaches half of the DMATCR value that was specified before transfer starts, the HE bit is not set to 1. If DMA transfer ends due to an NMI interrupt, a DMA address error, or clearing of the DE bit or the DME bit in DMAOR after the HE bit is set to 1, the bit remains set to 1. To clear the HE bit, write 0 to it after HE = 1 is read. 0: DMATCR > (DMATCR set before transfer starts)/2 during DMA transfer or after DMA transfer is terminated [Clearing condition] • Writing 0 after reading HE = 1. 1: DMATCR ≤ (DMATCR set before transfer starts)/2
18	HIE	0	R/W	Half-End Interrupt Enable Specifies whether to issue an interrupt request to the CPU when the transfer count reaches half of the DMATCR value that was specified before transfer starts. When the HIE bit is set to 1, this module requests an interrupt to the CPU when the HE bit becomes 1. 0: Disables an interrupt to be issued when DMATCR = (DMATCR set before transfer starts)/2 1: Enables an interrupt to be issued when DMATCR = (DMATCR set before transfer starts)/2

chanhvinh.com

Bit	Bit Name	Initial Value	R/W	Description
17	AM	0	R/W	Acknowledge Mode Specifies whether DACK and TEND are output in data read cycle or in data write cycle in dual address mode. In single address mode, DACK and TEND are always output regardless of the specification by this bit. This bit is valid only in CHCR_0. This bit is reserved in CHCR_1 to CHCR_15; it is always read as 0 and the write value should always be 0. 0: DACK and TEND output in read cycle (dual address mode) 1: DACK and TEND output in write cycle (dual address mode)
16	AL	0	R/W	Acknowledge Level Specifies the DACK (acknowledge) signal output is high active or low active. This bit is valid only in CHCR_0. This bit is reserved in CHCR_1 to CHCR_15; it is always read as 0 and the write value should always be 0. 0: Low-active output from DACK 1: High-active output from DACK

chanhvinh.com

Bit	Bit Name	Initial Value	R/W	Description
15, 14	DM[1:0]	00	R/W	Destination Address Mode These bits select whether the DMA destination address is incremented, decremented, or left fixed. (In single address mode, DM1 and DM0 bits are ignored when data is transferred to an external device with DACK.) 00: Fixed destination address 01: Destination address is incremented (+1 in byte-unit transfer, +2 in word-unit transfer, +4 in longword-unit transfer, +16 in 16-byte-unit transfer) 10: Destination address is decremented (–1 in byte-unit transfer, –2 in word-unit transfer, –4 in longword-unit transfer, setting prohibited in 16-byte-unit transfer) 11: Setting prohibited
13, 12	SM[1:0]	00	R/W	Source Address Mode These bits select whether the DMA source address is incremented, decremented, or left fixed. (In single address mode, SM1 and SM0 bits are ignored when data is transferred from an external device with DACK.) 00: Fixed source address 01: Source address is incremented (+1 in byte-unit transfer, +2 in word-unit transfer, +4 in longword-unit transfer, +16 in 16-byte-unit transfer) 10: Source address is decremented (–1 in byte-unit transfer, –2 in word-unit transfer, –4 in longword-unit transfer, setting prohibited in 16-byte-unit transfer) 11: Setting prohibited

chanhvinh.com

Bit	Bit Name	Initial Value	R/W	Description
11 to 8	RS[3:0]	0000	R/W	Resource Select These bits specify which transfer requests will be sent to this module. The changing of transfer request source should be done in the state when DMA enable bit (DE) is set to 0. 0000: External request, dual address mode 0001: Setting prohibited 0010: External request/single address mode External address space → External device with DACK 0011: External request/single address mode External device with DACK → External address space 0100: Auto request 0101: Setting prohibited 0110: Setting prohibited 0111: Setting prohibited 1000: DMA extension resource selector 1001: Controller area network, channel 0 1010: Controller area network, channel 1 1011: Setting prohibited 1100: Setting prohibited 1101: Setting prohibited 1110: Setting prohibited 1111: Setting prohibited Note: External request specification is valid only in CHCR_0. External request should not be specified for channels CHCR_1 to CHCR_15.

chanhvinh.com

Bit	Bit Name	Initial Value	R/W	Description
7	DL	0	R/W	DREQ Level
6	DS	0	R/W	DREQ Edge Select These bits specify the sampling method of the DREQ pin input and the sampling level. These bits are valid only in CHCR_0. These bits are reserved in CHCR_1 to CHCR_15; they are always read as 0 and the write value should always be 0. If the transfer request source is specified as an on-chip peripheral module or if an auto-request is specified, the specification by these bits is ignored. 00: DREQ detected in low level 01: DREQ detected at falling edge 10: DREQ detected in high level 11: DREQ detected at rising edge
5	TB	0	R/W	Transfer Bus Mode Specifies the bus mode at DMA transfer. Note that the burst mode must not be selected when TC = 0. 0: Cycle steal mode 1: Burst mode
4, 3	TS[1:0]	00	R/W	Transfer Size These bits specify the size of data to be transferred. Select the size of data to be transferred when the source or destination is an on-chip peripheral module register of which transfer size is specified. 00: Byte unit 01: Word unit (two bytes) 10: Longword unit (four bytes) 11: 16-byte (four longword) unit

chanhvinh.com

Bit	Bit Name	Initial Value	R/W	Description
2	IE	0	R/W	Interrupt Enable Specifies whether or not an interrupt request is generated to the CPU at the end of the DMA transfer. Setting this bit to 1 generates an interrupt request (DEI) to the CPU when TE bit is set to 1. 0: Disables an interrupt request 1: Enables an interrupt request
1	TE	0	R/(W)*	Transfer End Flag This bit is set to 1 when DMATCR becomes 0 and DMA transfer ends. The TE bit is not set to 1 in the following cases. • DMA transfer ends due to an NMI interrupt or DMA address error before DMATCR becomes 0. • DMA transfer is ended by clearing the DE bit and DME bit in DMA operation register (DMAOR). To clear the TE bit, write 0 after reading TE = 1. Even if the DE bit is set to 1 while the TEMASK bit is 0 and this bit is 1, transfer is not enabled. 0: During the DMA transfer or DMA transfer has been terminated [Clearing condition] • Writing 0 after reading TE = 1 1: DMA transfer ends by the specified count (DMATCR = 0)

chanhvinh.com

Bit	Bit Name	Initial Value	R/W	Description
0	DE	0	R/W	DMA Enable Enables or disables the DMA transfer. In auto request mode, DMA transfer starts by setting the DE bit and DME bit in DMAOR to 1. In this case, all of the bits TE, NMIF in DMAOR, and AE must be 0. In an external request or peripheral module request, DMA transfer starts if DMA transfer request is generated by the devices or peripheral modules after setting the bits DE and DME to 1. If the DREQ signal is detected by low/high level in external request mode, or in peripheral module request mode, the NMIF bit and the AE bit must be 0 if the TEMASK bit is 1. If the TEMASK bit is 0, the TE bit must also be 0. If the DREQ signal is detected by a rising/falling edge in external request mode, all of the bits TE, NMIF, and AE must be 0 as in the case of auto request mode. Clearing the DE bit to 0 can terminate the DMA transfer. 0: DMA transfer disabled 1: DMA transfer enabled

Note: * Only 0 can be written to clear the flag after 1 is read.

chanhvinh.com

11.3.5 DMA Reload Source Address Registers (RSAR)

The DMA reload source address registers (RSAR) are 32-bit readable/writable registers.

When the SAR reload function is enabled, the RSAR value is written to the source address register (SAR) at the end of the current DMA transfer. In this case, a new value for the next DMA transfer can be preset in RSAR during the current DMA transfer. When the SAR reload function is disabled, RSAR is ignored.

To transfer data in word (2-byte), longword (4-byte), or 16-byte unit, specify the address with 2-byte, 4-byte, or16-byte address boundary respectively.

Bit:	31	30	29	28	27	26	25	24	23	22	21	20	19	18	17	16
	-	-	-	-	-	-	-	-	-	-	-	-	-	-	-	-
Initial value:	0	0	0	0	0	0	0	0	0	0	0	0	0	0	0	0
R/W:	R/W	R/W	R/W	R/W	R/W	R/W	R/W	R/W	R/W	R/W	R/W	R/W	R/W	R/W	R/W	R/W

Bit:	15	14	13	12	11	10	9	8	7	6	5	4	3	2	1	0
	-	-	-	-	-	-	-	-	-	-	-	-	-	-	-	-
Initial value:	0	0	0	0	0	0	0	0	0	0	0	0	0	0	0	0
R/W:	R/W	R/W	R/W	R/W	R/W	R/W	R/W	R/W	R/W	R/W	R/W	R/W	R/W	R/W	R/W	R/W

chanhvinh.com

11.3.6 DMA Reload Destination Address Registers (RDAR)

The DMA reload destination address registers (RDAR) are 32-bit readable/writable registers.

When the DAR reload function is enabled, the RDAR value is written to the destination address register (DAR) at the end of the current DMA transfer. In this case, a new value for the next DMA transfer can be preset in RDAR during the current DMA transfer. When the DAR reload function is disabled, RDAR is ignored.

To transfer data in word (2-byte), longword (4-byte), or 16-byte unit, specify the address with 2-byte, 4-byte, or16-byte address boundary respectively.

Bit:	31	30	29	28	27	26	25	24	23	22	21	20	19	18	17	16
	-	-	-	-	-	-	-	-	-	-	-	-	-	-	-	-
Initial value:	0	0	0	0	0	0	0	0	0	0	0	0	0	0	0	0
R/W:	R/W	R/W	R/W	R/W	R/W	R/W	R/W	R/W	R/W	R/W	R/W	R/W	R/W	R/W	R/W	R/W

Bit:	15	14	13	12	11	10	9	8	7	6	5	4	3	2	1	0
	-	-	-	-	-	-	-	-	-	-	-	-	-	-	-	-
Initial value:	0	0	0	0	0	0	0	0	0	0	0	0	0	0	0	0
R/W:	R/W	R/W	R/W	R/W	R/W	R/W	R/W	R/W	R/W	R/W	R/W	R/W	R/W	R/W	R/W	R/W

chanhvinh.com

11.3.7 DMA Reload Transfer Count Registers (RDMATCR)

The DMA reload transfer count registers (RDMATCR) are 32-bit readable/writable registers.

When the SAR/DAR reload function is enabled, the RDMATCR value is written to the transfer count register (DMATCR) at the end of the current DMA transfer. In this case, a new value for the next DMA transfer can be preset in RDMATCR during the current DMA transfer. When the SAR/DAR reload function is disabled, RDMATCR is ignored.

The upper eight bits of RDMATCR are always read as 0, and the write value should always be 0.

As in DMATCR, the transfer count is 1 when the setting is H'00000001, 16,777,215 when H'00FFFFFF is set, and 16,777,216 (the maximum) when H'00000000 is set. To transfer data in 16 bytes, one 16-byte transfer (128 bits) counts one.

Bit:	31	30	29	28	27	26	25	24	23	22	21	20	19	18	17	16
	-	-	-	-	-	-	-	-	-	-	-	-	-	-	-	-
Initial value:	0	0	0	0	0	0	0	0	0	0	0	0	0	0	0	0
R/W:	R	R	R	R	R	R	R	R	R/W	R/W	R/W	R/W	R/W	R/W	R/W	R/W

Bit:	15	14	13	12	11	10	9	8	7	6	5	4	3	2	1	0
	-	-	-	-	-	-	-	-	-	-	-	-	-	-	-	-
Initial value:	0	0	0	0	0	0	0	0	0	0	0	0	0	0	0	0
R/W:	R/W	R/W	R/W	R/W	R/W	R/W	R/W	R/W	R/W	R/W	R/W	R/W	R/W	R/W	R/W	R/W

chanhvinh.com

11.3.8 DMA Operation Register (DMAOR)

The DMA operation register (DMAOR) is a 16-bit readable/writable register that specifies the priority level of channels at the DMA transfer. This register also shows the DMA transfer status.

Bit:	15	14	13	12	11	10	9	8	7	6	5	4	3	2	1	0
	-	-	CMS[1:0]		-	-	PR[1:0]		-	-	-	-	-	AE	NMIF	DME
Initial value:	0	0	0	0	0	0	0	0	0	0	0	0	0	0	0	0
R/W:	R	R	R/W	R/W	R	R	R/W	R/W	R	R	R	R	R	R/(W)*	R/(W)*	R/W

Note: * Only 0 can be written to clear the flag after 1 is read.

Bit	Bit Name	Initial Value	R/W	Description
15, 14	—	All 0	R	Reserved These bits are always read as 0. The write value should always be 0.
13, 12	CMS[1:0]	00	R/W	Cycle Steal Mode Select These bits select either normal mode or intermittent mode in cycle steal mode. It is necessary that the bus modes of all channels be set to cycle steal mode to make the intermittent mode valid. 00: Normal mode 01: Setting prohibited 10: Intermittent mode 16 Executes one DMA transfer for every 16 cycles of Bϕ clock. 11: Intermittent mode 64 Executes one DMA transfer for every 64 cycles of Bϕ clock.
11, 10	—	All 0	R	Reserved These bits are always read as 0. The write value should always be 0.

chanhvinh.com

Bit	Bit Name	Initial Value	R/W	Description
9, 8	PR[1:0]	00	R/W	Priority Mode These bits select the priority level between channels when there are transfer requests for multiple channels simultaneously. 00: Fixed mode 1: CH0 > CH1 > CH2 > CH3 > CH4 > CH5 > CH6 > CH7 > CH8 > CH9 > CH10 > CH11 > CH12 > CH13 > CH14 > CH15 01: Fixed mode 2: CH0 > CH8 > CH1 > CH9 > CH2 > CH10 > CH3 > CH11 > CH4 > CH12 > CH5 > CH13 > CH6 > CH14 > CH7 > CH15 10: Setting prohibited 11: Setting prohibited
7 to 3	—	All 0	R	Reserved These bits are always read as 0. The write value should always be 0.
2	AE	0	R/(W)*	Address Error Flag Indicates whether an address error has occurred by this module. When this bit is set, even if the DE bit in CHCR and the DME bit in DMAOR are set to 1, DMA transfer is not enabled. This bit can only be cleared by writing 0 after reading 1. 0: No address error occurred by this module 1: Address error occurred by this module [Clearing condition] • Writing 0 after reading AE = 1

chanhvinh.com

Bit	Bit Name	Initial Value	R/W	Description
1	NMIF	0	R/(W)*	NMI Flag Indicates that an NMI interrupt occurred. When this bit is set, even if the DE bit in CHCR and the DME bit in DMAOR are set to 1, DMA transfer is not enabled. This bit can only be cleared by writing 0 after reading 1. When the NMI is input, the DMA transfer in progress can be done in one transfer unit. Even if the NMI interrupt is input while this module is not in operation, the NMIF bit is set to 1. 0: No NMI interrupt 1: NMI interrupt occurred [Clearing condition] Writing 0 after reading NMIF = 1
0	DME	0	R/W	DMA Master Enable Enables or disables DMA transfer on all channels. If the DME bit and DE bit in CHCR are set to 1, DMA transfer is enabled. However, transfer is enabled only when the TE bit in CHCR of the transfer corresponding channel, the NMIF bit in DMAOR, and the AE bit are all cleared to 0. Clearing the DME bit to 0 can terminate the DMA transfer on all channels. 0: DMA transfer is disabled on all channels 1: DMA transfer is enabled on all channels

Note: * Only 0 can be written to clear the flag after 1 is read.

chanhvinh.com

If the priority mode bits are modified after a DMA transfer, the channel priority is initialized. If fixed mode 2 is specified, the channel priority is specified as CH0 > CH8 > CH1 > CH9 > CH2 > CH10 > CH3 > CH11 > CH4 > CH12 > CH5 > CH13 > CH6 > DH14 > CH7 > CH15. If fixed mode 1 is specified, the channel priority is specified as CH0 > CH1 > CH2 > CH3 > CH4 > CH5 > CH6 > CH7 > CH8 > CH9 > CH10 > CH11 > CH12 > CH13 > CH14 > CH15.

The internal operation of this module for an address error is as follows:

- No address error: Read (source to interior of this module) → Write (interior of this module to destination)
- Address error in source address: Nop → Nop
- Address error in destination address: Read → Nop

chanhvinh.com

11.3.9 DMA Extension Resource Selectors 0 to 7 (DMARS0 to DMARS7)

The DMA extension resource selectors (DMARS) are 16-bit readable/writable registers that specify the source of the DMA transfer request from peripheral modules in each channel. DMARS0 to DMARS7 are for channels 0 and 1, 2 and 3, 4 and 5, 6 and 7, 8 and 9, 10 and 11, 12 and 13, and 14 and 15, respectively. Table 11.3 shows the specifiable combinations.

DMARS can specify the following transfer request sources (The following modules can issue on-chip peripheral module requests):

- Serial communication interface with FIFO: 16 sources
- I^2C bus interface 3: eight sources
- A/D converter: one source
- Multi-function timer pulse unit 2: five sources
- Compare match timer: two sources
- USB 2.0 host/function module: two sources
- NAND flash memory controller: two sources
- Controller area network: three sources
- Serial sound interface: seven sources
- Sampling rate converter: six sources
- Sound generator: four sources
- Renesas SPDIF interface: two sources
- CD-ROM decoder: one source
- SD host interface: four sources
- MMC host interface: two sources
- Renesas serial peripheral interface: four sources
- Renesas quad serial peripheral interface: four sources
- Clock synchronous serial I/O with FIFO: two sources
- Motor control PWM timer: two sources

Three transfer request sources for the controller area network do not need to be specified by these registers, for they can be specified using the RS3 to RS0 bits in the DMA channel control register (CHCR).

chanhvinh.com

- DMARS0

Bit:	15	14	13	12	11	10	9	8	7	6	5	4	3	2	1	0
	CH1 MID[5:0]						CH1 RID[1:0]		CH0 MID[5:0]						CH0 RID[1:0]	
Initial value:	0	0	0	0	0	0	0	0	0	0	0	0	0	0	0	0
R/W:	R/W	R/W	R/W	R/W	R/W	R/W	R/W	R/W	R/W	R/W	R/W	R/W	R/W	R/W	R/W	R/W

- DMARS1

Bit:	15	14	13	12	11	10	9	8	7	6	5	4	3	2	1	0
	CH3 MID[5:0]						CH3 RID[1:0]		CH2 MID[5:0]						CH2 RID[1:0]	
Initial value:	0	0	0	0	0	0	0	0	0	0	0	0	0	0	0	0
R/W:	R/W	R/W	R/W	R/W	R/W	R/W	R/W	R/W	R/W	R/W	R/W	R/W	R/W	R/W	R/W	R/W

- DMARS2

Bit:	15	14	13	12	11	10	9	8	7	6	5	4	3	2	1	0
	CH5 MID[5:0]						CH5 RID[1:0]		CH4 MID[5:0]						CH4 RID[1:0]	
Initial value:	0	0	0	0	0	0	0	0	0	0	0	0	0	0	0	0
R/W:	R/W	R/W	R/W	R/W	R/W	R/W	R/W	R/W	R/W	R/W	R/W	R/W	R/W	R/W	R/W	R/W

- DMARS3

Bit:	15	14	13	12	11	10	9	8	7	6	5	4	3	2	1	0
	CH7 MID[5:0]						CH7 RID[1:0]		CH6 MID[5:0]						CH6 RID[1:0]	
Initial value:	0	0	0	0	0	0	0	0	0	0	0	0	0	0	0	0
R/W:	R/W	R/W	R/W	R/W	R/W	R/W	R/W	R/W	R/W	R/W	R/W	R/W	R/W	R/W	R/W	R/W

- DMARS4

Bit:	15	14	13	12	11	10	9	8	7	6	5	4	3	2	1	0
	CH9 MID[5:0]						CH9 RID[1:0]		CH8 MID[5:0]						CH8 RID[1:0]	
Initial value:	0	0	0	0	0	0	0	0	0	0	0	0	0	0	0	0
R/W:	R/W	R/W	R/W	R/W	R/W	R/W	R/W	R/W	R/W	R/W	R/W	R/W	R/W	R/W	R/W	R/W

- DMARS5

Bit:	15	14	13	12	11	10	9	8	7	6	5	4	3	2	1	0
	CH11 MID[5:0]						CH11 RID[1:0]		CH10 MID[5:0]						CH10 RID[1:0]	
Initial value:	0	0	0	0	0	0	0	0	0	0	0	0	0	0	0	0
R/W:	R/W	R/W	R/W	R/W	R/W	R/W	R/W	R/W	R/W	R/W	R/W	R/W	R/W	R/W	R/W	R/W

chanhvinh.com

- DMARS6

Bit:	15	14	13	12	11	10	9	8	7	6	5	4	3	2	1	0
	CH13 MID[5:0]						CH13 RID[1:0]		CH12 MID[5:0]						CH12 RID[1:0]	
Initial value:	0	0	0	0	0	0	0	0	0	0	0	0	0	0	0	0
R/W:	R/W	R/W	R/W	R/W	R/W	R/W	R/W	R/W	R/W	R/W	R/W	R/W	R/W	R/W	R/W	R/W

- DMARS7

Bit:	15	14	13	12	11	10	9	8	7	6	5	4	3	2	1	0
	CH15 MID[5:0]						CH15 RID[1:0]		CH14 MID[5:0]						CH14 RID[1:0]	
Initial value:	0	0	0	0	0	0	0	0	0	0	0	0	0	0	0	0
R/W:	R/W	R/W	R/W	R/W	R/W	R/W	R/W	R/W	R/W	R/W	R/W	R/W	R/W	R/W	R/W	R/W

Transfer requests from the various modules specify MID and RID as shown in table 11.3.

Table 11.3 DMARS Settings

Peripheral Module	Setting Value for One Channel ({MID, RID})	MID	RID	Function
USB 2.0 host/function module	H'03	B'000000	B'11	Channel 0 FIFO
	H'07	B'000001	B'11	Channel 1 FIFO
Renesas SPDIF interface	H'09	B'000010	B'01	Transmit
	H'0A	B'000010	B'10	Receive
SD host interface 0	H'11	B'000100	B'01	SD_BUF write
	H'12		B'10	SD_BUF read
SD host interface 1	H'A9	B'101010	B'01	SD_BUF write
	H'AA		B'10	SD_BUF read
MMC host interface	H'AD	B'101011	B'01	Transmit
	H'AE		B'10	Receive
Clock synchronous serial I/O with FIFO	H'19	B'000110	B'01	Transmit
	H'1A		B'10	Receive
Serial sound interface Channel 0	H'21	B'001000	B'01	Transmit
	H'22		B'10	Receive
Serial sound interface Channel 1	H'27	B'001001	B'11	—

chanhvinh.com

Peripheral Module	Setting Value for One Channel ({MID, RID})	MID	RID	Function
Serial sound interface Channel 2	H'2B	B'001010	B'11	—
Serial sound interface Channel 3	H'2F	B'001011	B'11	—
Serial sound interface Channel 4	H'B9	B'101110	B'01	—
Serial sound interface Channel 5	H'BD	B'101111	B'01	—
Motor control PWM timer Channel 1	H'33	B'001100	B'11	—
Motor control PWM timer Channel 2	H'37	B'001101	B'11	—
Sound generator 0	H'C5	B'110001	B'01	—
Sound generator 1	H'C9	B'110010	B'01	—
Sound generator 2	H'CD	B'110011	B'01	—
Sound generator 3	H'D5	B'110101	B'01	—
Sampling rate converter Channel 0	H'41	B'010000	B'01	Input data FIFO empty
	H'42		B'10	Output data FIFO full
Sampling rate converter Channel 1	H'45	B'010001	B'01	Input data FIFO empty
	H'46		B'10	Output data FIFO full
Sampling rate converter Channel 2	H'B5	B'101101	B'01	Input data FIFO empty
	H'B6		B'10	Output data FIFO full
Renesas serial peripheral interface Channel 0	H'51	B'010100	B'01	Transmit
	H'52		B'10	Receive
Renesas serial peripheral interface Channel 1	H'55	B'010101	B'01	Transmit
	H'56		B'10	Receive

chanhvinh.com

Peripheral Module	Setting Value for One Channel ({MID, RID})	MID	RID	Function
Renesas quad serial peripheral interface Channel 0	H'A1	B'101000	B'01	Transmit
	H'A2		B'10	Receive
Renesas quad serial peripheral interface Channel 1	H'A5	B'101001	B'01	Transmit
	H'A6		B'10	Receive
I^2C bus interface 3 Channel 0	H'61	B'011000	B'01	Transmit
	H'62		B'10	Receive
I^2C bus interface 3 Channel 0	H'61	B'011000	B'01	Transmit
	H'62		B'10	Receive
I^2C bus interface 3 Channel 1	H'65	B'011001	B'01	Transmit
	H'66		B'10	Receive
I^2C bus interface 3 Channel 2	H'69	B'011010	B'01	Transmit
	H'6A		B'10	Receive
I^2C bus interface 3 Channel 3	H'C1	B'110000	B'01	Transmit
	H'C2		B'10	Receive
CD-ROM decoder	H'73	B'011100	B'11	—
Serial communication interface with FIFO Channel 0	H'81	B'100000	B'01	Transmit
	H'82		B'10	Receive
Serial communication interface with FIFO Channel 1	H'85	B'100001	B'01	Transmit
	H'86		B'10	Receive
Serial communication interface with FIFO Channel 2	H'89	B'100010	B'01	Transmit
	H'8A		B'10	Receive
Serial communication interface with FIFO Channel 3	H'8D	B'100011	B'01	Transmit
	H'8E		B'10	Receive
Serial communication interface with FIFO Channel 4	H'91	B'100100	B'01	Transmit
	H'92		B'10	Receive
Serial communication interface with FIFO Channel 5	H'95	B'100101	B'01	Transmit
	H'96		B'10	Receive

chanhvinh.com

Peripheral Module	Setting Value for One Channel ({MID, RID})	MID	RID	Function
Serial communication interface with FIFO Channel 6	H'99	B'100110	B'01	Transmit
	H'9A		B'10	Receive
Serial communication interface with FIFO Channel 7	H'9D	B'100111	B'01	Transmit
	H'9E		B'10	Receive
A/D converter	H'B3	B'101100	B'11	—
NAND flash memory controller	H'BB	B'101110	B'11	Transmit/ receive data
	H'BF	B'101111	B'11	Transmit/ receive control code
Multi-function timer pulse unit 2 Channel 0	H'E3	B'111000	B'11	—
Multi-function timer pulse unit 2 Channel 1	H'E7	B'111001	B'11	—
Multi-function timer pulse unit 2 Channel 2	H'EB	B'111010	B'11	—
Multi-function timer pulse unit 2 Channel 3	H'EF	B'111011	B'11	—
Multi-function timer pulse unit 2 Channel 4	H'F3	B'111100	B'11	—
Compare match timer Channel 0	H'FB	B'111110	B'11	—
Compare match timer Channel 1	H'FF	B'111111	B'11	—

When MID or RID other than the values listed in table 11.3 is set, the operation of this LSI is not guaranteed. The transfer request from DMARS is valid only when the resource select bits (RS3 to RS0) in CHCR0 to CHCR15 have been set to B'1000. Otherwise, even if DMARS has been set, the transfer request source is not accepted.

chanhvinh.com

11.4 Operation

When there is a DMA transfer request, this module starts the transfer according to the predetermined channel priority order; when the transfer end conditions are satisfied, it ends the transfer. Transfers can be requested in three modes: auto request, external request, and on-chip peripheral module request. In bus mode, the burst mode or the cycle steal mode can be selected.

11.4.1 Transfer Flow

After the DMA source address registers (SAR), DMA destination address registers (DAR), DMA transfer count registers (DMATCR), DMA channel control registers (CHCR), DMA operation register (DMAOR), three reload registers (RSAR, RDAR, RDMATCR) and DMA extension resource selector (DMARS) are set for the target transfer conditions, this module transfers data according to the following procedure:

1. Checks to see if transfer is enabled (DE = 1, DME = 1, TEMASK = 0 or 1 (TE = 0 when TEMASK = 0), AE = 0, NMIF = 0).
2. When a transfer request comes and transfer is enabled, this module transfers one transfer unit of data (depending on the settings of the TS1 and TS0 bits). For an auto request, the transfer begins automatically when the DE bit and DME bit are set to 1. The DMATCR value will be decremented by 1 for each transfer. The actual transfer flows vary by address mode and bus mode.
3. When half of the specified transfer count is exceeded (when DMATCR reaches half of the initial value), an HEI interrupt is sent to the CPU if the HIE bit in CHCR is set to 1.
4. When transfer has been completed for the specified count (when DMATCR reaches 0) while the TEMASK bit is 0, the transfer ends normally. If the IE bit in CHCR is set to 1 at this time, a DEI interrupt is sent to the CPU. When DMATCR reaches 0 while the TEMASK bit is 1, the TE bit is set to 1 and then the values set in RSAR, RDAR and RDMATCR are reloaded in SAR, DAR and DMATCR, respectively to continue transfer operation until the DMA transfer request is cancelled.
5. When an address error in this module or an NMI interrupt is generated, the transfer is terminated. Transfers are also terminated when the DE bit in CHCR or the DME bit in DMAOR is cleared to 0.

chanhvinh.com

Figure 11.2 is a flowchart of this procedure.

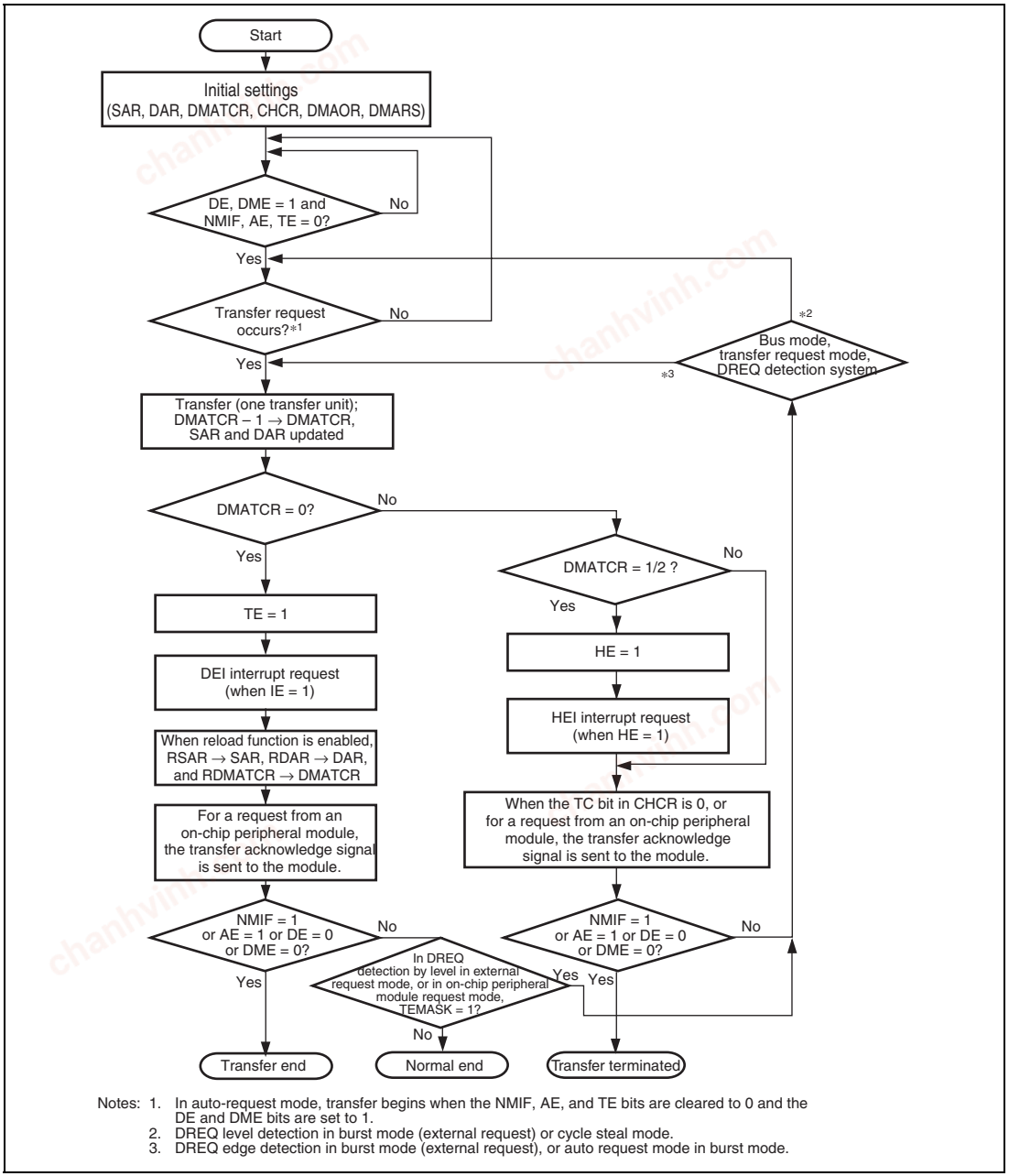

Notes: 1. In auto-request mode, transfer begins when the NMIF, AE, and TE bits are cleared to 0 and the DE and DME bits are set to 1.
2. DREQ level detection in burst mode (external request) or cycle steal mode.
3. DREQ edge detection in burst mode (external request), or auto request mode in burst mode.

Figure 11.2 DMA Transfer Flowchart

chanhvinh.com

11.4.2 DMA Transfer Requests

DMA transfer requests are basically generated in either the data transfer source or destination, but they can also be generated in external devices and on-chip peripheral modules that are neither the transfer source nor destination.

Transfers can be requested in three modes: auto request, external request, and on-chip peripheral module request. The request mode is selected by the RS[3:0] bits in CHCR_0 to CHCR_15 and DMARS0 to DMARS7.

(1) Auto-Request Mode

When there is no transfer request signal from an external source, as in a memory-to-memory transfer or a transfer between memory and an on-chip peripheral module unable to request a transfer, the auto-request mode allows this module to automatically generate a transfer request signal internally. When the DE bits in CHCR_0 to CHCR_15 and the DME bit in DMAOR are set to 1, the transfer begins so long as the TE bits in CHCR_0 to CHCR_15, and the AE and NMIF bits in DMAOR are 0.

(2) External Request Mode

In this mode a transfer is performed at the request signal (DREQ0) of an external device. Choose one of the modes shown in table 11.4 according to the application system. When the DMA transfer is enabled (DE = 1, DME = 1, TEMASK = 0 or 1 (TE = 0 when TEMASK = 0), AE = 0, NMIF = 0 for level detection; DE = 1, DME = 1, TE = 0, AE = 0, NMIF = 0 for edge detection), DMA transfer is performed upon a request at the DREQ input.

Table 11.4 Selecting External Request Modes with the RS Bits

RS[3]	RS[2]	RS[1]	RS[0]	Address Mode	Transfer Source	Transfer Destination
0	0	0	0	Dual address mode	Any	Any
0	0	1	0	Single address mode	External memory, memory-mapped external device	External device with DACK
			1		External device with DACK	External memory, memory-mapped external device

chanhvinh.com

Choose to detect DREQ by either the edge or level of the signal input with the DL and DS bits in CHCR_0 as shown in table 11.5. The source of the transfer request does not have to be the data transfer source or destination. When DREQ is detected by a rising/falling edge and DMA transfer is performed in burst mode, the transfer continues until DMATCR reaches 0 by one DMA transfer request. In cycle steal mode, one DMA transfer is performed by one request.

Table 11.5 Selecting External Request Detection with DL and DS Bits

CHCR		
DL Bit	**DS Bit**	**Detection of External Request**
0	0	Low-level detection
	1	Falling-edge detection
1	0	High-level detection
	1	Rising-edge detection

When DREQ is accepted, the DREQ pin enters the request accept disabled state (non-sensitive period). After issuing acknowledge DACK signal for the accepted DREQ, the DREQ pin again enters the request accept enabled state.

When DREQ is used by level detection, there are following two cases by the timing to detect the next DREQ after outputting DACK.

- Overrun 0: Transfer is terminated after the same number of transfer has been performed as requests.
- Overrun 1: Transfer is terminated after transfers have been performed for (the number of requests plus 1) times.

The DO bit in CHCR selects this overrun 0 or overrun 1.

Table 11.6 Selecting External Request Detection with DO Bit

CHCR	
DO Bit	**External Request**
0	Overrun 0
1	Overrun 1

chanhvinh.com

(3) On-Chip Peripheral Module Request

In this mode, the transfer is performed in response to the DMA transfer request signal from an on-chip peripheral module.

Table 11.7 lists the DMA transfer request signals sent from on-chip peripheral modules to this module.

If DMA transfer is enabled (DE = 1, DME = 1, TEMASK = 0 or 1 (TE = 0 when TEMASK = 0), AE = 0, and NMIF = 0) in on-chip peripheral module request mode, DMA transfer is started by a transfer request signal.

In on-chip peripheral module request mode, there are cases where transfer source or destination is fixed. For details, see table 11.7.

Table 11.7 Selecting On-Chip Peripheral Module Request Modes with RS3 to RS0 Bits

CHCR	DMARS		DMA Transfer Request Source	DMA Transfer Request Signal	Transfer Source	Transfer Destination	Bus Mode
RS[3:0]	MID	RID					
1001	Any	Any	Controller area network Channel 0	RM0 (reception end)	MB0	Any	Cycle steal
1010	Any	Any	Controller area network Channel 1	RM0 (reception end)	MB0	Any	
1011	Any	Any	Controller area network Channel 2	RM0 (reception end)	MB0	Any	
1000	000000	11	USB 2.0 host/function module	USB_DMA0 (receive FIFO in channel 0 full)	D0FIFO	Any	
				USB_DMA0 (transmit FIFO in channel 0 empty)	Any	D0FIFO	
	000001	11		USB_DMA1 (receive FIFO in channel 1 full)	D1FIFO	Any	
				USB_DMA1 (transmit FIFO in channel 1 empty)	Any	D1FIFO	

chanhvinh.com

CHCR	DMARS		DMA Transfer Request Source	DMA Transfer Request Signal	Transfer Source	Transfer Destination	Bus Mode
RS[3:0]	MID	RID					
1000	000010	01	Renesas SPDIF interface	SPDIFTXI (DMA transfer from transmission module)	Any	TDAD	Cycle steal
		10		SPDIFRXI (DMA transfer to reception module)	RDAD	Any	
	000100	01	SD host interface 0	SD_BUF write	Any	Data register	
		10		SD_BUF read	Data register	Any	
	101010	01	SD host interface 1	SD_BUF write	Any	Data register	
		10		SD_BUF read	Data register	Any	
	101011	01	MMC host interface	Transmit data empty	Any	Data register	
		10		Receive data full	Data register	Any	
	000110	01	Clock synchronous serial I/O with FIFO	TXI transmit data transfer)	Any	SITDR	
		10		RXI (receive data transfer)	SIRDR	Any	
	001000	01	Serial sound interface Channel 0	SSITXI0 (transmit data empty)	Any	SSIFTDR_0	
		10		SSIRXI0 (receive data full)	SSIFRDR_0	Any	
	001001	11	Serial sound interface Channel 1	SSIRTI1 (transmit data empty)	Any	SSIFTDR_1	
				SSIRTI1 (receive data full)	SSIFRDR_1	Any	
	001010	11	Serial sound interface Channel 2	SSIRTI2 (transmit data empty)	Any	SSIFTDR_2	
				SSIRTI2 (receive data full)	SSIFRDR_2	Any	
	001011	11	Serial sound interface Channel 3	SSIRTI3 (transmit data empty)	Any	SSIFTDR_3	
				SSIRTI3 (receive data full)	SSIFRDR_3	Any	

chanhvinh.com

CHCR	DMARS		DMA Transfer Request Source	DMA Transfer Request Signal	Transfer Source	Transfer Destination	Bus Mode
RS[3:0]	MID	RID					
1000	101100	01	Serial sound interface Channel 4	SSIRTI4 (transmit data empty)	Any	SSIFTDR_4	Cycle steal
				SSIRTI4 (receive data full)	SSIFRDR_4	Any	
	101111	01	Serial sound interface Channel 5	SSIRTI5 (transmit data empty)	Any	SSIFTDR_5	
				SSIRTI5 (receive data full)	SSIFRDR_5	Any	
	001100	11	Motor control PWM timer Channel 1	CMI1 (PWM compare match)	Any	PWBFR1	
	001101	11	Motor control PWM timer Channel 2	CMI2 (PWM compare match)	Any	PWBFR2	
	110001	01	Sound generator 0	SGDEI0	Any	SGLR_0	
	110010	01	Sound generator 1	SGDEI1	Any	SGLR_1	
	110011	01	Sound generator 2	SGDEI2	Any	SGLR_2	
	110101	01	Sound generator 3	SGDEI3	Any	SGLR_3	
	010000	01	Sampling rate converter Channel 0	IDEI0 (input data empty)	Any	SRCIDR_0	
		10		ODFI0 (output data full)	SRCODR_0	Any	
	010001	01	Sampling rate converter Channel 1	IDEI1 (input data empty)	Any	SRCIDR_1	
		10		ODFI1 (output data full)	SRCODR_1	Any	
	101101	01	Sampling rate converter Channel 2	IDEI2 (input data empty)	Any	SRCIDR_2	
		10		ODFI2 (output data full)	SRCODR_2	Any	
	010100	01	Renesas serial peripheral interface Channel 0	SPTI0 (transmit buffer empty)	Any	SPDR_0	
		10		SPRI0 (receive buffer full)	SPDR_0	Any	

chanhvinh.com

CHCR	DMARS		DMA Transfer Request Source	DMA Transfer Request Signal	Transfer Source	Transfer Destination	Bus Mode
RS[3:0]	MID	RID					
1000	010101	01	Renesas serial peripheral interface Channel 1	SPTI1 (transmit buffer empty)	Any	SPDR_1	Cycle steal
		10		SPRI1 (receive buffer full)	SPDR_1	Any	
	101000	01	Renesas quad serial peripheral interface Channel 0	SPTI0 (transmit buffer empty)	Any	SPDR_0	
		10		SPRI0 (receive buffer full)	SPDR_0	Any	
	101001	01	Renesas quad serial peripheral interface Channel 1	SPTI1 (transmit buffer empty)	Any	SPDR_1	
		10		SPRI1 (receive buffer full)	SPDR_1	Any	
	011000	01	I^2C bus interface 3 Channel 0	TXI0 (transmit data empty)	Any	ICDRT_0	
		10		RXI0 (receive data full)	ICDRR_0	Any	
	011001	01	I^2C bus interface 3 Channel 1	TXI1 (transmit data empty)	Any	ICDRT_1	
		10		RXI1 (receive data full)	ICDRR_1	Any	
	011010	01	I^2C bus interface 3 Channel 2	TXI2 (transmit data empty)	Any	ICDRT_2	
		10		RXI2 (receive data full)	ICDRR_2	Any	
	110000	01	I^2C bus interface 3 Channel 3	TXI3 (transmit data empty)	Any	ICDRT_3	
		10		RXI3 (receive data full)	ICDRR_3	Any	
	011100	11	CD-ROM decoder	IREADY (decode end)	STRMDOUT	Any	Cycle steal or burst
	100000	01	Serial communication interface with FIFO Channel 0	TXI0 (transmit FIFO data empty)	Any	SCFTDR_0	Cycle steal
		10		RXI0 (receive FIFO data full)	SCFRDR_0	Any	
	100001	01	Serial communication interface with FIFO Channel 1	TXI1 (transmit FIFO data empty)	Any	SCFTDR_1	
		10		RXI1 (receive FIFO data full)	SCFRDR_1	Any	

chanhvinh.com

CHCR	DMARS		DMA Transfer Request Source	DMA Transfer Request Signal	Transfer Source	Transfer Destination	Bus Mode
RS[3:0]	MID	RID					
1000	100010	01	Serial communication interface with FIFO Channel 2	TXI2 (transmit FIFO data empty)	Any	SCFTDR_2	Cycle steal
		10		RXI2 (receive FIFO data full)	SCFRDR_2	Any	
	100011	01	Serial communication interface with FIFO Channel 3	TXI3 (transmit FIFO data empty)	Any	SCFTDR_3	
		10		RXI3 (receive FIFO data full)	SCFRDR_3	Any	
	100100	01	Serial communication interface with FIFO Channel 4	TXI4 (transmit FIFO data empty)	Any	SCFTDR_4	
		10		RXI4 (receive FIFO data full)	SCFRDR_4	Any	
	100101	01	Serial communication interface with FIFO Channel 5	TXI5 (transmit FIFO data empty)	Any	SCFTDR_5	
		10		RXI5 (receive FIFO data full)	SCFRDR_5	Any	
	100110	01	Serial communication interface with FIFO Channel 6	TXI6 (transmit FIFO data empty)	Any	SCFTDR_6	
		10		RXI6 (receive FIFO data full)	SCFRDR_6	Any	
	100111	01	Serial communication interface with FIFO Channel 7	TXI7 (transmit FIFO data empty)	Any	SCFTDR_7	
		10		RXI7 (receive FIFO data full)	SCFRDR_7	Any	
	101100	11	A/D converter	ADI (A/D conversion end)	ADDR	Any	
	101110	11	NAND flash memory controller	Data part Transmission FIFO data empty	Any	FLDTFIFO	
				Data part Reception FIFO data full	FLDTFIFO	Any	
	101111	11		Control code part Transmission FIFO data empty	Any	FLECFIFO	
				Control code part Reception FIFO data full	FLECFIFO	Any	

chanhvinh.com

CHCR	DMARS		DMA Transfer Request Source	DMA Transfer Request Signal	Transfer Source	Transfer Destination	Bus Mode
RS[3:0]	MID	RID					
1000	111000	11	Multi-function timer pulse unit 2 Channel 0	TGI0A (input capture or compare match)	Any	Any	Cycle steal or burst
	111001	11	Multi-function timer pulse unit 2 Channel 1	TGI1A (input capture or compare match)	Any	Any	
	111010	11	Multi-function timer pulse unit 2 Channel 2	TGI2A (input capture or compare match)	Any	Any	
	111011	11	Multi-function timer pulse unit 2 Channel 3	TGI3A (input capture or compare match)	Any	Any	
	111100	11	Multi-function timer pulse unit 2 Channel 4	TGI4A (input capture or compare match)	Any	Any	
	111110	11	Compare match timer Channel 0	CMI0 (compare match)	Any	Any	
	111111	11	Compare match timer Channel 1	CMI1 (compare match)	Any	Any	

chanhvinh.com

11.4.3 Channel Priority

When this module receives simultaneous transfer requests on two or more channels, it selects a channel according to a predetermined priority order. Two modes (fixed mode 1 and fixed mode 2) are selected.

In these mode, the priority levels among the channels are as follows:

Fixed mode 1: CH0 > CH1 > CH2 > CH3 > CH4 > CH5 > CH6 > CH7 > CH8 > CH9 > CH10 > CH11> CH12> CH13 > CH14 > CH15

Fixed mode 2: CH0 > CH8 > CH1 > CH9 > CH2 > CH10 > CH3 > CH11> CH4 > CH12 > CH5 > CH13 > CH6> CH14 > CH7 > CH15

These are selected by the PR1 and PR0 bits in the DMA operation register (DMAOR).

11.4.4 DMA Transfer Types

DMA transfer has two types; single address mode transfer and dual address mode transfer. They depend on the number of bus cycles of access to the transfer source and destination. A data transfer timing depends on the bus mode, which is the cycle steal mode or burst mode. This module supports the transfers shown in table 11.8.

Table 11.8 Supported DMA Transfers

	Transfer Destination				
Transfer Source	**External Device with DACK**	**External Memory**	**Memory-Mapped External Device**	**On-Chip Peripheral Module**	**On-Chip Memory**
External device with DACK	Not available	Dual, single	Dual, single	Not available	Not available
External memory	Dual, single	Dual	Dual	Dual	Dual
Memory-mapped external device	Dual, single	Dual	Dual	Dual	Dual
On-chip peripheral module	Not available	Dual	Dual	Dual	Dual
On-chip memory	Not available	Dual	Dual	Dual	Dual

Notes: 1. Dual: Dual address mode
2. Single: Single address mode
3. 16-byte transfer is available only for on-chip peripheral modules that support longword access.

chanhvinh.com

(1) Address Modes

(a) Dual Address Mode

In dual address mode, both the transfer source and destination are accessed (selected) by an address. The transfer source and destination can be located externally or internally.

DMA transfer requires two bus cycles because data is read from the transfer source in a data read cycle and written to the transfer destination in a data write cycle. At this time, transfer data is temporarily stored in this module. In the transfer between external memories as shown in figure 11.3, data is read to this module from one external memory in a data read cycle, and then that data is written to the other external memory in a data write cycle.

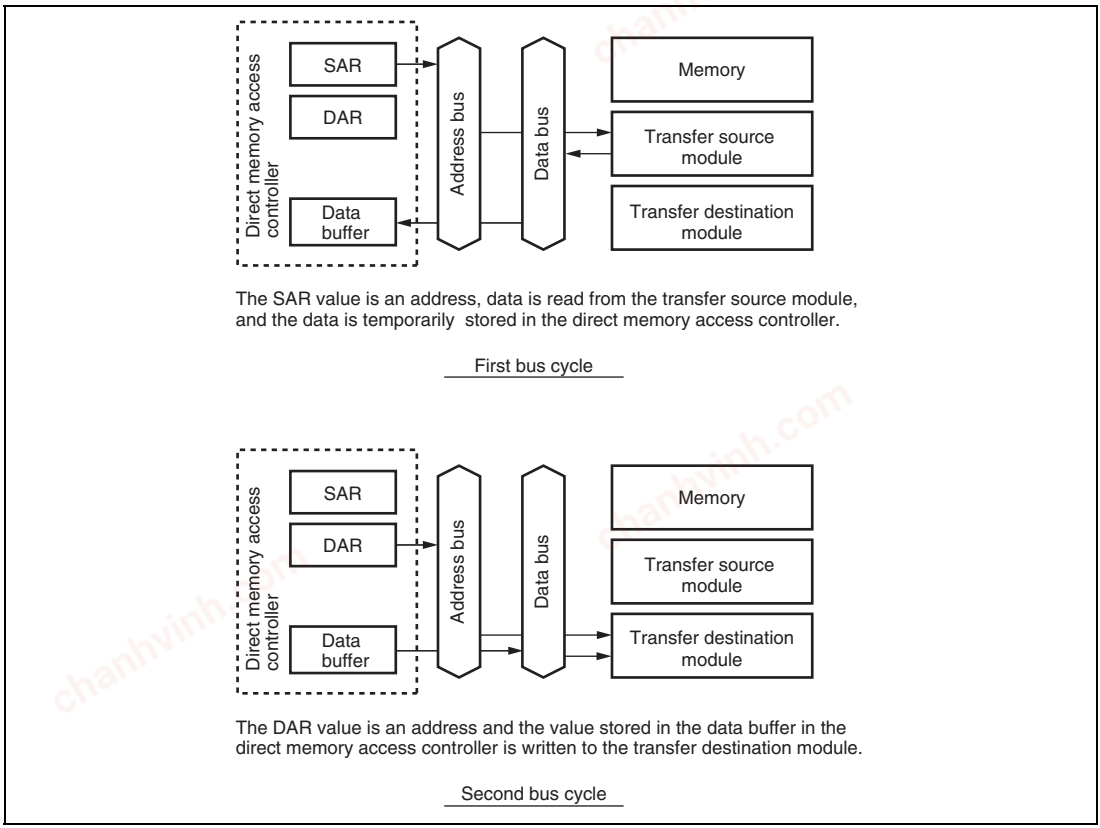

Figure 11.3 Data Flow of Dual Address Mode

chanhvinh.com

Auto request, external request, and on-chip peripheral module request are available for the transfer request. DACK can be output in read cycle or write cycle in dual address mode. The AM bit in the channel control register (CHCR) can specify whether the DACK is output in read cycle or write cycle.

Figure 11.4 shows an example of DMA transfer timing in dual address mode.

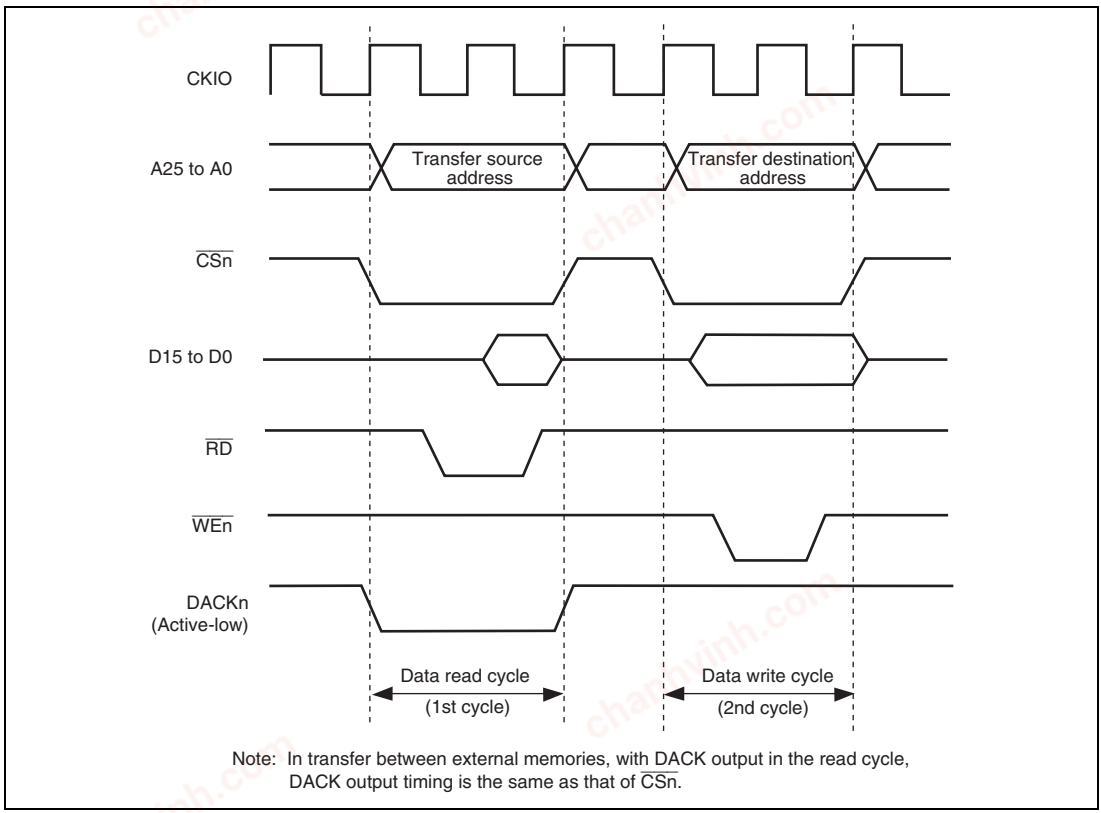

Figure 11.4 Example of DMA Transfer Timing in Dual Mode (Transfer Source: Normal Memory, Transfer Destination: Normal Memory)

chanhvinh.com

(b) Single Address Mode

In single address mode, both the transfer source and destination are external devices, either of them is accessed (selected) by the DACK signal, and the other device is accessed by an address. In this mode, this module performs one DMA transfer in one bus cycle, accessing one of the external devices by outputting the DACK transfer request acknowledge signal to it, and at the same time outputting an address to the other device involved in the transfer. For example, in the case of transfer between external memory and an external device with DACK shown in figure 11.5, when the external device outputs data to the data bus, that data is written to the external memory in the same bus cycle.

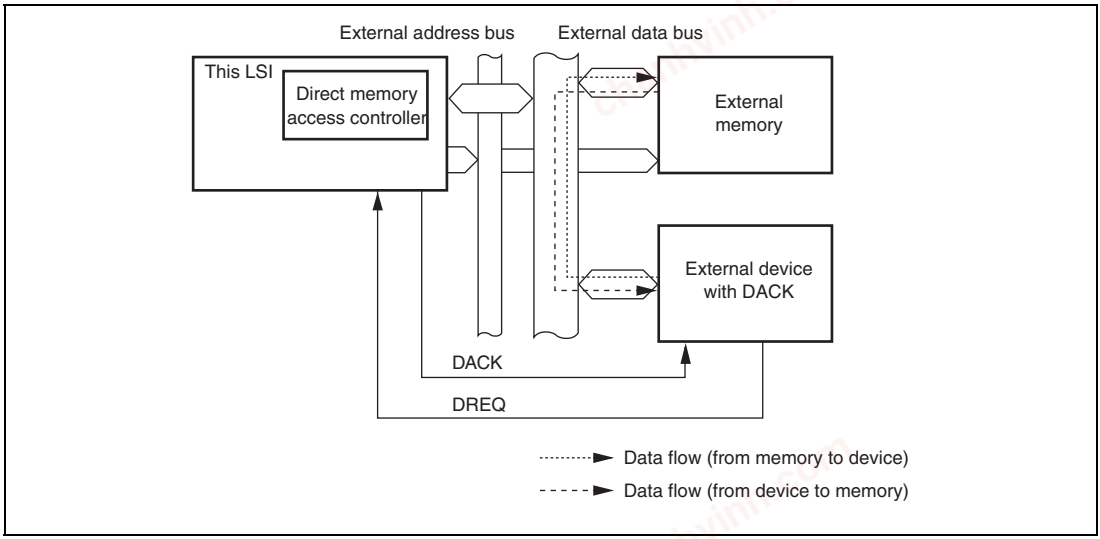

Figure 11.5 Data Flow in Single Address Mode

Two kinds of transfer are possible in single address mode: (1) transfer between an external device with DACK and a memory-mapped external device, and (2) transfer between an external device with DACK and external memory. In both cases, only the external request signal (DREQ) is used for transfer requests.

chanhvinh.com

Figure 11.6 shows an example of DMA transfer timing in single address mode.

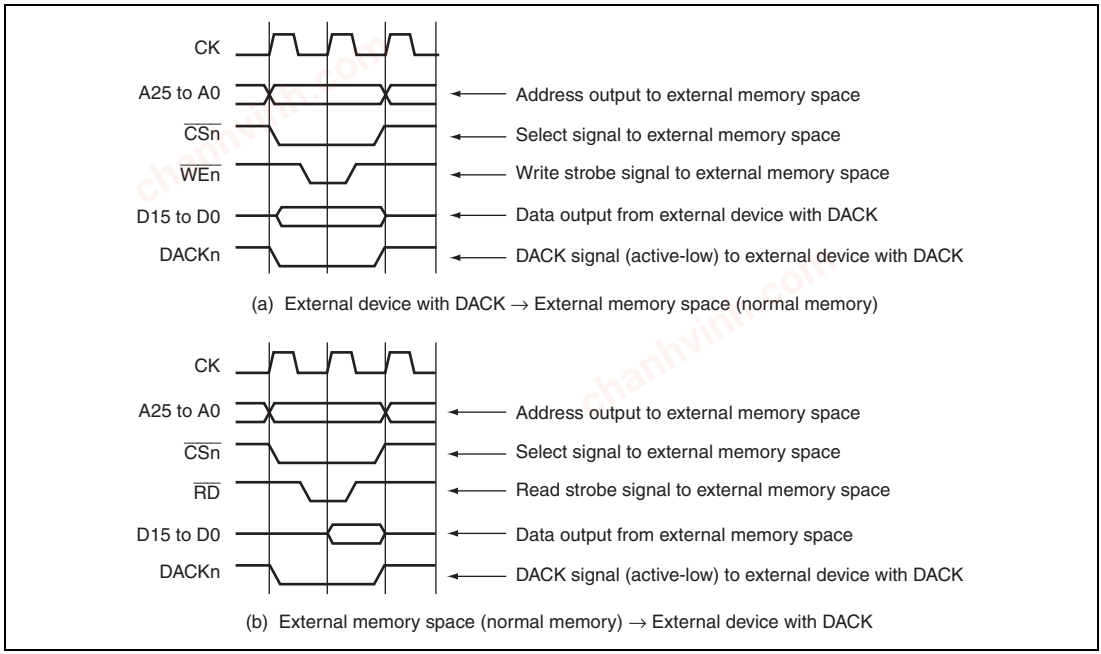

Figure 11.6 Example of DMA Transfer Timing in Single Address Mode

chanhvinh.com

(2) Bus Modes

There are two bus modes; cycle steal and burst. Select the mode by the TB bits in the channel control registers (CHCR).

(a) Cycle Steal Mode

- Normal mode

  In normal mode of cycle steal, the bus mastership is given to another bus master after a one-transfer-unit (byte, word, longword, or 16-byte unit) DMA transfer. When another transfer request occurs, the bus mastership is obtained from another bus master and a transfer is performed for one transfer unit. When that transfer ends, the bus mastership is passed to another bus master. This is repeated until the transfer end conditions are satisfied.

  The cycle-steal normal mode can be used for any transfer section; transfer request source, transfer source, and transfer destination.

  Figure 11.7 shows an example of DMA transfer timing in cycle-steal normal mode. Transfer conditions shown in the figure are;

  — Dual address mode

  — DREQ low level detection

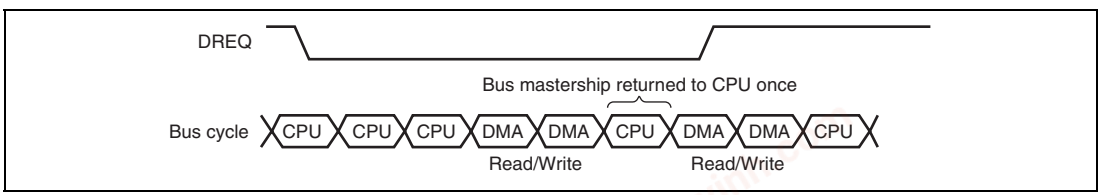

Figure 11.7 DMA Transfer Example in Cycle-Steal Normal Mode (Dual Address, DREQ Low Level Detection)

- Intermittent Mode 16 and Intermittent Mode 64

  In intermittent mode of cycle steal, this module returns the bus mastership to other bus master whenever a unit of transfer (byte, word, longword, or 16 bytes) is completed. If the next transfer request occurs after that, this module obtains the bus mastership from other bus master after waiting for 16 or 64 cycles of Bϕ clock. This module then transfers data of one unit and returns the bus mastership to other bus master. These operations are repeated until the transfer end condition is satisfied. It is thus possible to make lower the ratio of bus occupation by DMA transfer than the normal mode of cycle steal.

  When this module obtains again the bus mastership, DMA transfer may be postponed in case of entry updating due to cache miss.

chanhvinh.com

The cycle-steal intermittent mode can be used for any transfer section; transfer request source, transfer source, and transfer destination. The bus modes, however, must be cycle steal mode in all channels.

Figure 11.8 shows an example of DMA transfer timing in cycle-steal intermittent mode. Transfer conditions shown in the figure are;

— Dual address mode

— DREQ low level detection

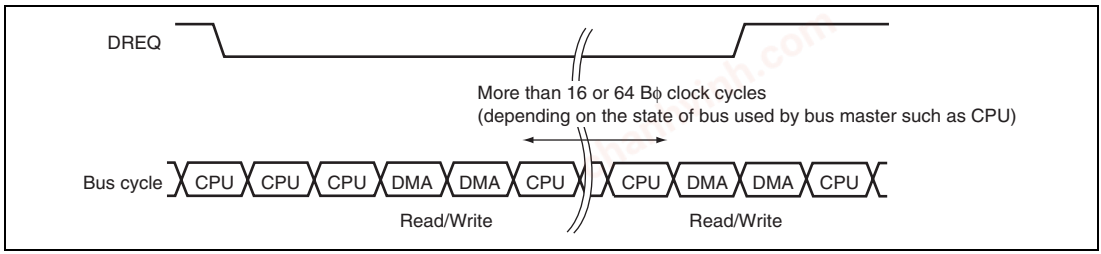

Figure 11.8 Example of DMA Transfer in Cycle-Steal Intermittent Mode (Dual Address, DREQ Low Level Detection)

(b) Burst Mode

In burst mode, once this module obtains the bus mastership, it does not release the bus mastership and continues to perform transfer until the transfer end condition is satisfied. In external request mode with low-level detection of the DREQ pin, however, when the DREQ pin is driven high, the bus mastership is passed to another bus master after the DMA transfer request that has already been accepted ends, even if the transfer end conditions have not been satisfied.

Figure 11.9 shows DMA transfer timing in burst mode.

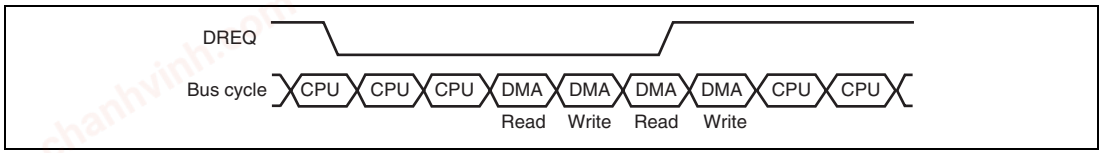

Figure 11.9 DMA Transfer Example in Burst Mode (Dual Address, DREQ Low Level Detection)

chanhvinh.com

(3) Relationship between Request Modes and Bus Modes by DMA Transfer Category

Table 11.9 shows the relationship between request modes and bus modes by DMA transfer category.

Table 11.9 Relationship of Request Modes and Bus Modes by DMA Transfer Category

Address Mode	Transfer Category	Request Mode	Bus Mode	Transfer Size (Bits)	Usable Channels
Dual	External device with DACK and external memory	External	B/C	8/16/32/128	0
	External device with DACK and memory-mapped external device	External	B/C	8/16/32/128	0
	External memory and external memory	All*4	B/C	8/16/32/128	0 to 15*3
	External memory and memory-mapped external device	All*4	B/C	8/16/32/128	0 to 15*3
	Memory-mapped external device and memory-mapped external device	All*4	B/C	8/16/32/128	0 to 15*3
	External memory and on-chip peripheral module	All*1	B/C*5	8/16/32/128*2	0 to 15*3
	Memory-mapped external device and on-chip peripheral module	All*1	B/C*5	8/16/32/128*2	0 to 15*3
	On-chip peripheral module and on-chip peripheral module	All*1	B/C*5	8/16/32/128*2	0 to 15*3
	On-chip memory and on-chip memory	All*4	B/C	8/16/32/128	0 to 15*3
	On-chip memory and memory-mapped external device	All*4	B/C	8/16/32/128	0 to 15*3
	On-chip memory and on-chip peripheral module	All*1	B/C*5	8/16/32/128*2	0 to 15*3
	On-chip memory and external memory	All*4	B/C	8/16/32/128	0 to 15*3
Single	External device with DACK and external memory	External	B/C	8/16/32/128	0
	External device with DACK and memory-mapped external device	External	B/C	8/16/32/128	0

[Legend]

B: Burst

C: Cycle steal

Notes: 1. External requests, auto requests, and on-chip peripheral module requests are all available. However, in the case of internal module request, along with the exception of the multi-function timer pulse unit 2 and the compare match timer as the transfer request source, the requesting module must be designated as the transfer source or the transfer destination.

chanhvinh.com

2. Access size permitted for the on-chip peripheral module register functioning as the transfer source or transfer destination.
3. If the transfer request is an external request, channel 0 is only available.
4. External requests, auto requests, and on-chip peripheral module requests are all available. In the case of on-chip peripheral module requests, however, the compare match timer and the multi-function timer pulse unit 2 are only available.
5. In the case of on-chip peripheral module request, only cycle steal except for the CD-ROM decoder, the multi-function timer pulse unit 2, and the compare match timer as the transfer request source.

(4) Bus Mode and Channel Priority

In priority fixed mode (CH0 > CH1), when channel 1 is transferring data in burst mode and a request arrives for transfer on channel 0, which has higher-priority, the data transfer on channel 0 will begin immediately. In this case, if the transfer on channel 0 is also in burst mode, the transfer on channel 1 will only resume on completion of the transfer on channel 0.

When channel 0 is in cycle steal mode, one transfer-unit of data on this channel, which has the higher priority, is transferred. Data is then transferred continuously to channel 1 without releasing the bus. The bus mastership will then switch between the two in this order: channel 0, channel 1, channel 0, channel 1, etc. That is, the CPU cycle after the data transfer in cycle steal mode is replaced with a burst-mode transfer cycle (priority execution of burst-mode cycle). An example of this is shown in figure 11.10.

When multiple channels are in burst mode, data transfer on the channel that has the highest priority is given precedence. When DMA transfer is being performed on multiple channels, the bus mastership is not released to another bus-master device until all of the competing burst-mode transfers have been completed.

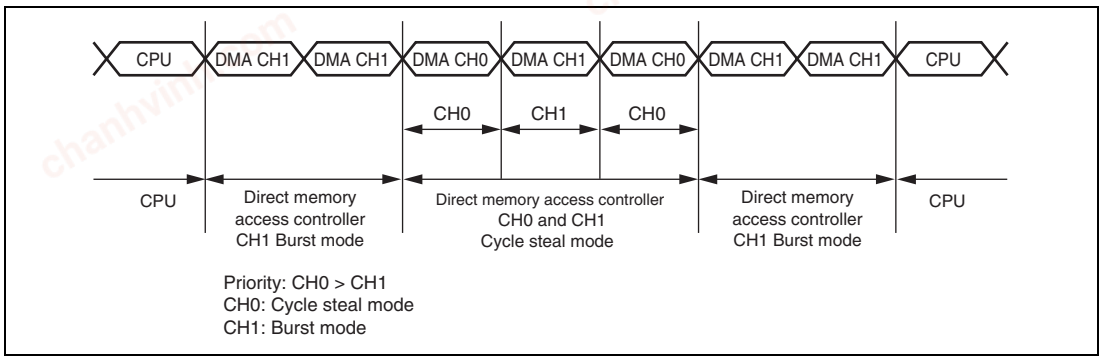

Figure 11.10 Bus State when Multiple Channels are Operating

chanhvinh.com

11.4.5 Number of Bus Cycles and DREQ Pin Sampling Timing

(1) Number of Bus Cycles

When this module is the bus master, the number of bus cycles is controlled by the bus state controller in the same way as when the CPU is the bus master. For details, see section 10, Bus State Controller.

(2) DREQ Pin Sampling Timing

Figures 11.11 to 11.14 show the DREQ input sampling timings in each bus mode.

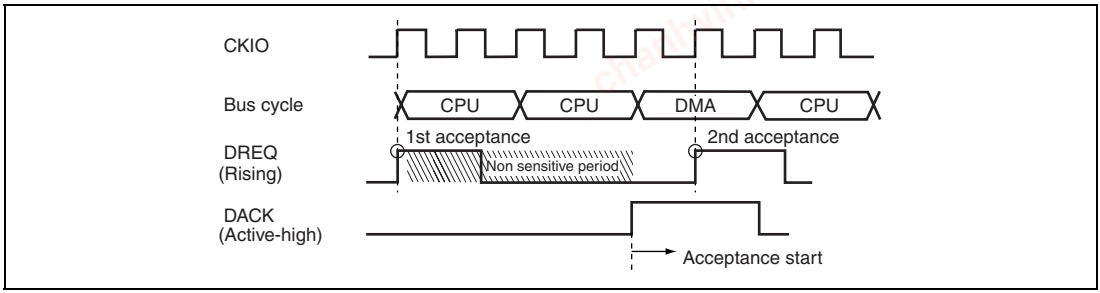

Figure 11.11 Example of DREQ Input Detection in Cycle Steal Mode Edge Detection

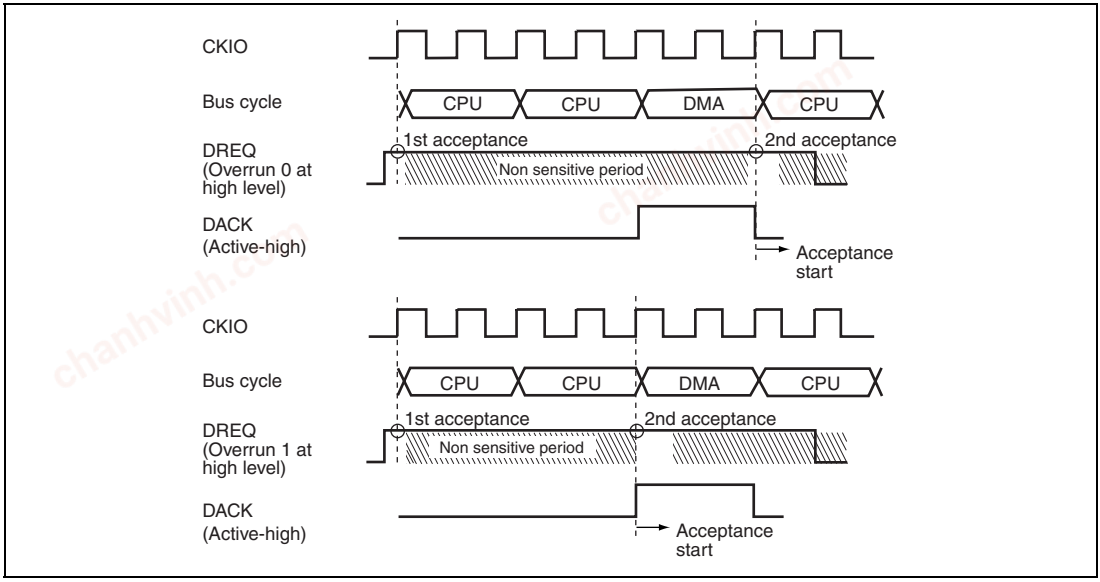

Figure 11.12 Example of DREQ Input Detection in Cycle Steal Mode Level Detection

chanhvinh.com

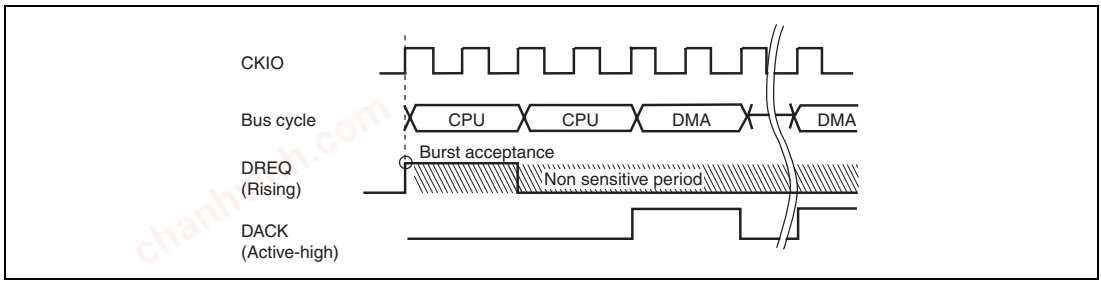

Figure 11.13 Example of DREQ Input Detection in Burst Mode Edge Detection

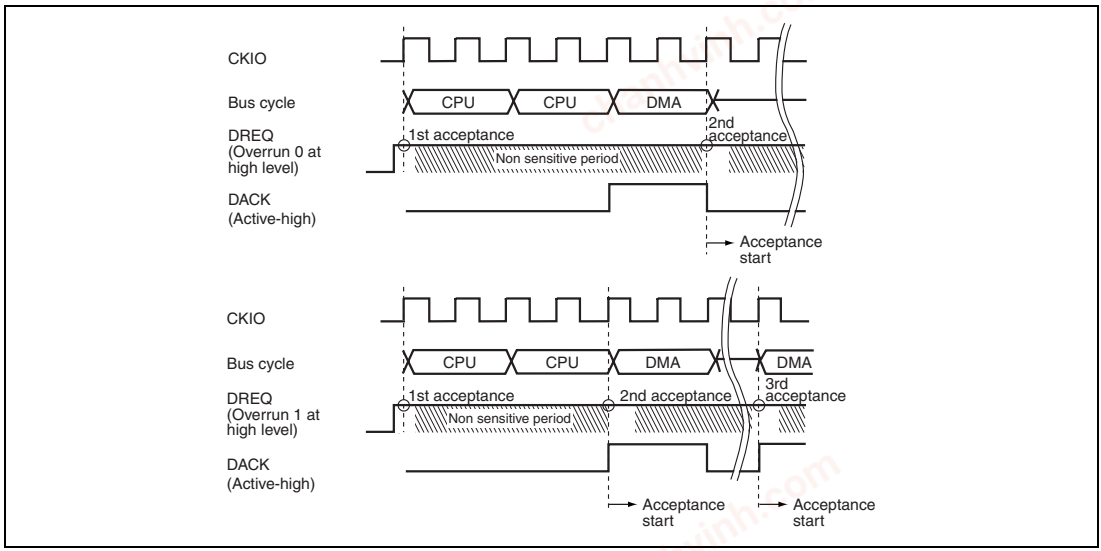

Figure 11.14 Example of DREQ Input Detection in Burst Mode Level Detection

Figure 11.15 shows the TEND output timing.

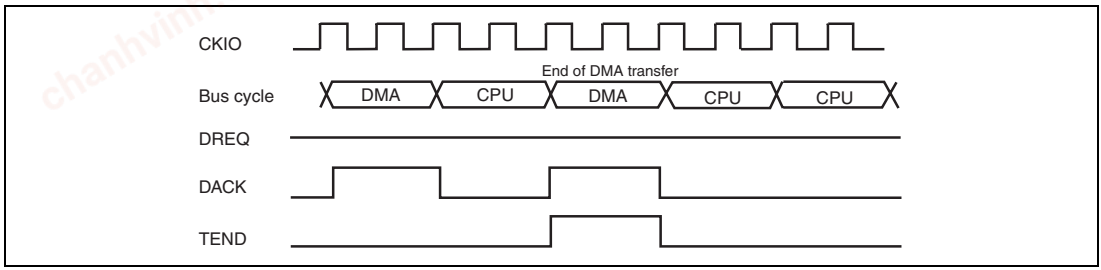

Figure 11.15 Example of DMA Transfer End Signal Timing (Cycle Steal Mode Level Detection)

chanhvinh.com

The unit of the DMA transfer is divided into multiple bus cycles when 16-byte transfer is performed for an 8-bit, 16-bit, or 32-bit external device, when longword access is made to an 8-bit or 16-bit external device, or when word access is made to an 8-bit external device. When a setting is made so that the DMA transfer size is divided into multiple bus cycles and the $\overline{CS}$ signal is negated between bus cycles, note that DACK and TEND are divided like the $\overline{CS}$ signal for data alignment as shown in figure 11.16. Figures 11.11 to 11.15 show the cases where DACK and TEND are not divided in the DMA transfer.

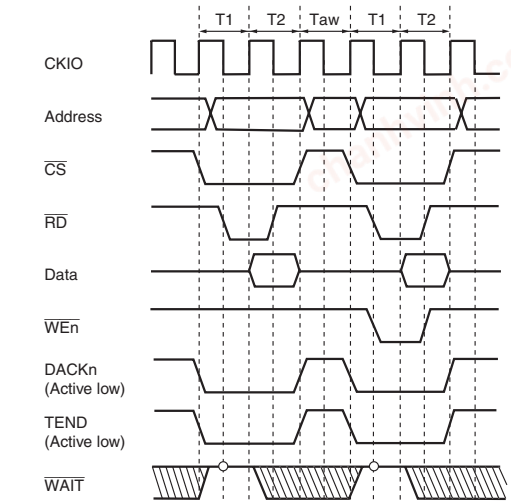

Note: TEND is asserted for the last unit of DMA transfer. If a transfer unit is divided into multiple bus cycles and the $\overline{CS}$ is negated between the bus cycles, TEND is also divided.

Figure 11.16 Bus State Controller Normal Memory Access (No Wait, Idle Cycle 1, Longword Access to 16-Bit Device)

chanhvinh.com

11.5 Usage Notes

11.5.1 Timing of DACK and TEND Outputs

When the external memory is the MPX-I/O, the DACK output is asserted with the timing of the data cycle. For details, see section 10.5.5, MPX-I/O Interface in section 10, Bus State Controller.

When the memory is other than the MPX-I/O, the DACK output is asserted with the same timing as the corresponding CS signal.

The TEND output does not depend on the type of memory and is always asserted with the same timing as the corresponding CS signal.

chanhvinh.com

chanhvinh.com
chanhvinh.com
chanhvinh.com

chanhvinh.com

Section 12 Multi-Function Timer Pulse Unit 2

This LSI has an on-chip multi-function timer pulse unit 2 that comprises five 16-bit timer channels.

12.1 Features

- Maximum 16 pulse input/output lines
- Selection of eight counter input clocks for each channel
- The following operations can be set:
  - Waveform output at compare match
  - Input capture function
  - Counter clear operation
  - Multiple timer counters (TCNT) can be written to simultaneously
  - Simultaneous clearing by compare match and input capture is possible
  - Register simultaneous input/output is possible by synchronous counter operation
  - A maximum 12-phase PWM output is possible in combination with synchronous operation
- Buffer operation settable for channels 0, 3, and 4
- Phase counting mode settable independently for each of channels 1 and 2
- Cascade connection operation
- Fast access via internal 16-bit bus
- 28 interrupt sources
- Automatic transfer of register data
- A/D converter start trigger can be generated
- Module standby mode can be settable
- A total of six-phase waveform output, which includes complementary PWM output, and positive and negative phases of reset PWM output by interlocking operation of channels 3 and 4, is possible.
- AC synchronous motor (brushless DC motor) drive mode using complementary PWM output and reset PWM output is settable by interlocking operation of channels 0, 3, and 4, and the selection of two types of waveform outputs (chopping and level) is possible.
- In complementary PWM mode, interrupts at the crest and trough of the counter value and A/D converter start triggers can be skipped.

chanhvinh.com

Table 12.1 Functions of Multi-Function Timer Pulse Unit 2

Item		Channel 0	Channel 1	Channel 2	Channel 3	Channel 4
Count clock		Pϕ/1 Pϕ/4 Pϕ/16 Pϕ/64 TCLKA TCLKB TCLKC TCLKD	Pϕ/1 Pϕ/4 Pϕ/16 Pϕ/64 Pϕ/256 TCLKA TCLKB	Pϕ/1 Pϕ/4 Pϕ/16 Pϕ/64 Pϕ/1024 TCLKA TCLKB TCLKC	Pϕ/1 Pϕ/4 Pϕ/16 Pϕ/64 Pϕ/256 Pϕ/1024 TCLKA TCLKB	Pϕ/1 Pϕ/4 Pϕ/16 Pϕ/64 Pϕ/256 Pϕ/1024 TCLKA TCLKB
General registers		TGRA_0 TGRB_0 TGRE_0	TGRA_1 TGRB_1	TGRA_2 TGRB_2	TGRA_3 TGRB_3	TGRA_4 TGRB_4
General registers/ buffer registers		TGRC_0 TGRD_0 TGRF_0	—	—	TGRC_3 TGRD_3	TGRC_4 TGRD_4
I/O pins		TIOC0A TIOC0B TIOC0C TIOC0D	TIOC1A TIOC1B	TIOC2A TIOC2B	TIOC3A TIOC3B TIOC3C TIOC3D	TIOC4A TIOC4B TIOC4C TIOC4D
Counter clear function		TGR compare match or input capture	TGR compare match or input capture	TGR compare match or input capture	TGR compare match or input capture	TGR compare match or input capture
Compare match output	0 output	√	√	√	√	√
	1 output	√	√	√	√	√
	Toggle output	√	√	√	√	√
Input capture function		√	√	√	√	√
Synchronous operation		√	√	√	√	√
PWM mode 1		√	√	√	√	√
PWM mode 2		√	√	√	—	—
Complementary PWM mode		—	—	—	√	√
Reset PWM mode		—	—	—	√	√
AC synchronous motor drive mode		√	—	—	√	√

chanhvinh.com

Item	Channel 0	Channel 1	Channel 2	Channel 3	Channel 4
Phase counting mode	—	√	√	—	—
Buffer operation	√	—	—	√	√
Activation of direct memory access controller	TGR compare match or input capture	TGR compare match or input capture	TGR compare match or input capture	TGR compare match or input capture	TGR compare match or input capture and TCNT overflow or underflow
A/D converter start trigger	TGRA_0 compare match or input capture TGRE_0 compare match	TGRA_1 compare match or input capture	TGRA_2 compare match or input capture	TGRA_3 compare match or input capture	TGRA_4 compare match or input capture TCNT_4 underflow (trough) in complementary PWM mode
Interrupt sources	7 sources • Compare match or input capture 0A • Compare match or input capture 0B • Compare match or input capture 0C • Compare match or input capture 0D • Compare match 0E • Compare match 0F • Overflow	4 sources • Compare match or input capture 1A • Compare match or input capture 1B • Overflow • Underflow	4 sources • Compare match or input capture 2A • Compare match or input capture 2B • Overflow • Underflow	5 sources • Compare match or input capture 3A • Compare match or input capture 3B • Compare match or input capture 3C • Compare match or input capture 3D • Overflow	5 sources • Compare match or input capture 4A • Compare match or input capture 4B • Compare match or input capture 4C • Compare match or input capture 4D • Overflow or underflow

chanhvinh.com

Item	Channel 0	Channel 1	Channel 2	Channel 3	Channel 4
A/D converter start request delaying function	—	—	—	—	• A/D converter start request at a match between TADCORA_4 and TCNT_4 • A/D converter start request at a match between TADCORB_4 and TCNT_4
Interrupt skipping function	—	—	—	• Skips TGRA_3 compare match interrupts	• Skips TCIV_4 interrupts

[Legend]
√: Available
—: Not available

chanhvinh.com

Figure 12.1 shows a block diagram.

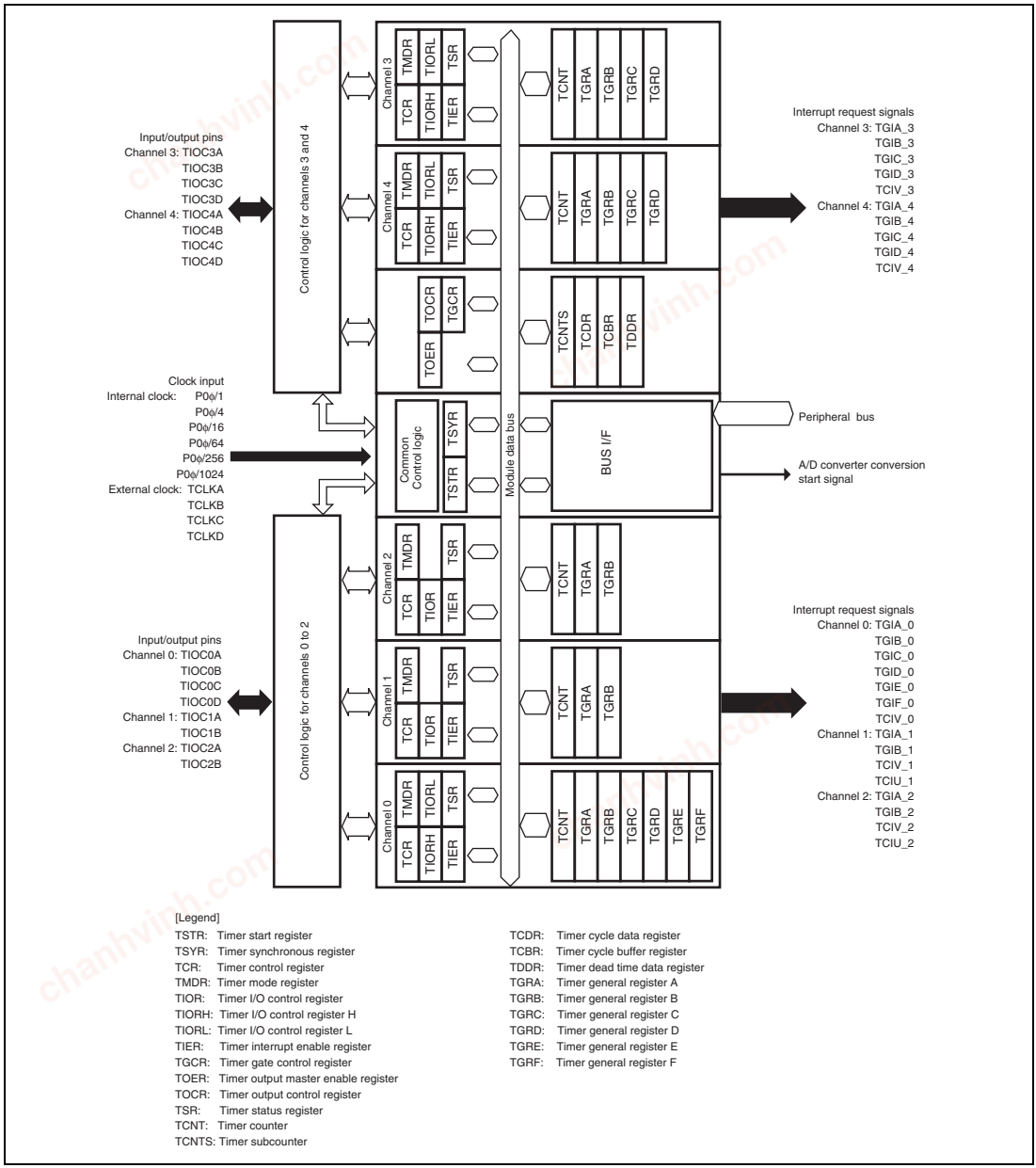

Figure 12.1 Block Diagram

chanhvinh.com

12.2 Input/Output Pins

Table 12.2 shows the pin configuration.

Table 12.2 Pin Configuration

Channel	Pin Name	I/O	Function
Common	TCLKA	Input	External clock A input pin (Channel 1 phase counting mode A phase input)
	TCLKB	Input	External clock B input pin (Channel 1 phase counting mode B phase input)
	TCLKC	Input	External clock C input pin (Channel 2 phase counting mode A phase input)
	TCLKD	Input	External clock D input pin (Channel 2 phase counting mode B phase input)
0	TIOC0A	I/O	TGRA_0 input capture input/output compare output/PWM output pin
	TIOC0B	I/O	TGRB_0 input capture input/output compare output/PWM output pin
	TIOC0C	I/O	TGRC_0 input capture input/output compare output/PWM output pin
	TIOC0D	I/O	TGRD_0 input capture input/output compare output/PWM output pin
1	TIOC1A	I/O	TGRA_1 input capture input/output compare output/PWM output pin
	TIOC1B	I/O	TGRB_1 input capture input/output compare output/PWM output pin
2	TIOC2A	I/O	TGRA_2 input capture input/output compare output/PWM output pin
	TIOC2B	I/O	TGRB_2 input capture input/output compare output/PWM output pin
3	TIOC3A	I/O	TGRA_3 input capture input/output compare output/PWM output pin
	TIOC3B	I/O	TGRB_3 input capture input/output compare output/PWM output pin
	TIOC3C	I/O	TGRC_3 input capture input/output compare output/PWM output pin
	TIOC3D	I/O	TGRD_3 input capture input/output compare output/PWM output pin
4	TIOC4A	I/O	TGRA_4 input capture input/output compare output/PWM output pin
	TIOC4B	I/O	TGRB_4 input capture input/output compare output/PWM output pin
	TIOC4C	I/O	TGRC_4 input capture input/output compare output/PWM output pin
	TIOC4D	I/O	TGRD_4 input capture input/output compare output/PWM output pin

Note: For the pin configuration in complementary PWM mode, see table 12.54 in section 12.4.8, Complementary PWM Mode.

chanhvinh.com

12.3 Register Descriptions

Table 12.3 shows the register configuration. To distinguish registers in each channel, an underscore and the channel number are added as a suffix to the register name; TCR for channel 0 is expressed as TCR_0.

Table 12.3 Register Configuration

Channel	Register Name	Abbreviation	R/W	Initial value	Address	Access Size
0	Timer control register_0	TCR_0	R/W	H'00	H'FFFE4300	8
	Timer mode register_0	TMDR_0	R/W	H'00	H'FFFE4301	8
	Timer I/O control register H_0	TIORH_0	R/W	H'00	H'FFFE4302	8
	Timer I/O control register L_0	TIORL_0	R/W	H'00	H'FFFE4303	8
	Timer interrupt enable register_0	TIER_0	R/W	H'00	H'FFFE4304	8
	Timer status register_0	TSR_0	R/W	H'C0	H'FFFE4305	8
	Timer counter_0	TCNT_0	R/W	H'0000	H'FFFE4306	16
	Timer general register A_0	TGRA_0	R/W	H'FFFF	H'FFFE4308	16
	Timer general register B_0	TGRB_0	R/W	H'FFFF	H'FFFE430A	16
	Timer general register C_0	TGRC_0	R/W	H'FFFF	H'FFFE430C	16
	Timer general register D_0	TGRD_0	R/W	H'FFFF	H'FFFE430E	16
	Timer general register E_0	TGRE_0	R/W	H'FFFF	H'FFFE4320	16
	Timer general register F_0	TGRF_0	R/W	H'FFFF	H'FFFE4322	16
	Timer interrupt enable register 2_0	TIER2_0	R/W	H'00	H'FFFE4324	8
	Timer status register 2_0	TSR2_0	R/W	H'C0	H'FFFE4325	8
	Timer buffer operation transfer mode register_0	TBTM_0	R/W	H'00	H'FFFE4326	8
1	Timer control register_1	TCR_1	R/W	H'00	H'FFFE4380	8
	Timer mode register_1	TMDR_1	R/W	H'00	H'FFFE4381	8
	Timer I/O control register_1	TIOR_1	R/W	H'00	H'FFFE4382	8
	Timer interrupt enable register_1	TIER_1	R/W	H'00	H'FFFE4384	8
	Timer status register_1	TSR_1	R/W	H'C0	H'FFFE4385	8

chanhvinh.com

Channel	Register Name	Abbreviation	R/W	Initial value	Address	Access Size
1	Timer counter_1	TCNT_1	R/W	H'0000	H'FFFE4386	16
	Timer general register A_1	TGRA_1	R/W	H'FFFF	H'FFFE4388	16
	Timer general register B_1	TGRB_1	R/W	H'FFFF	H'FFFE438A	16
	Timer input capture control register	TICCR	R/W	H'00	H'FFFE4390	8
2	Timer control register_2	TCR_2	R/W	H'00	H'FFFE4000	8
	Timer mode register_2	TMDR_2	R/W	H'00	H'FFFE4001	8
	Timer I/O control register_2	TIOR_2	R/W	H'00	H'FFFE4002	8
	Timer interrupt enable register_2	TIER_2	R/W	H'00	H'FFFE4004	8
	Timer status register_2	TSR_2	R/W	H'C0	H'FFFE4005	8
	Timer counter_2	TCNT_2	R/W	H'0000	H'FFFE4006	16
	Timer general register A_2	TGRA_2	R/W	H'FFFF	H'FFFE4008	16
	Timer general register B_2	TGRB_2	R/W	H'FFFF	H'FFFE400A	16
3	Timer control register_3	TCR_3	R/W	H'00	H'FFFE4200	8
	Timer mode register_3	TMDR_3	R/W	H'00	H'FFFE4202	8
	Timer I/O control register H_3	TIORH_3	R/W	H'00	H'FFFE4204	8
	Timer I/O control register L_3	TIORL_3	R/W	H'00	H'FFFE4205	8
	Timer interrupt enable register_3	TIER_3	R/W	H'00	H'FFFE4208	8
	Timer status register_3	TSR_3	R/W	H'C0	H'FFFE422C	8
	Timer counter_3	TCNT_3	R/W	H'0000	H'FFFE4210	16
	Timer general register A_3	TGRA_3	R/W	H'FFFF	H'FFFE4218	16
	Timer general register B_3	TGRB_3	R/W	H'FFFF	H'FFFE421A	16
	Timer general register C_3	TGRC_3	R/W	H'FFFF	H'FFFE4224	16
	Timer general register D_3	TGRD_3	R/W	H'FFFF	H'FFFE4226	16
	Timer buffer operation transfer mode register_3	TBTM_3	R/W	H'00	H'FFFE4238	8
4	Timer control register_4	TCR_4	R/W	H'00	H'FFFE4201	8
	Timer mode register_4	TMDR_4	R/W	H'00	H'FFFE4203	8
	Timer I/O control register H_4	TIORH_4	R/W	H'00	H'FFFE4206	8
	Timer I/O control register L_4	TIORL_4	R/W	H'00	H'FFFE4207	8

chanhvinh.com

Channel	Register Name	Abbreviation	R/W	Initial value	Address	Access Size
4	Timer interrupt enable register_4	TIER_4	R/W	H'00	H'FFFE4209	8
	Timer status register_4	TSR_4	R/W	H'C0	H'FFFE422D	8
	Timer counter_4	TCNT_4	R/W	H'0000	H'FFFE4212	16
	Timer general register A_4	TGRA_4	R/W	H'FFFF	H'FFFE421C	16
	Timer general register B_4	TGRB_4	R/W	H'FFFF	H'FFFE421E	16
	Timer general register C_4	TGRC_4	R/W	H'FFFF	H'FFFE4228	16
	Timer general register D_4	TGRD_4	R/W	H'FFFF	H'FFFE422A	16
	Timer buffer operation transfer mode register_4	TBTM_4	R/W	H'00	H'FFFE4239	8
	Timer A/D converter start request control register	TADCR	R/W	H'0000	H'FFFE4240	16
	Timer A/D converter start request cycle set register A_4	TADCORA_4	R/W	H'FFFF	H'FFFE4244	16
	Timer A/D converter start request cycle set register B_4	TADCORB_4	R/W	H'FFFF	H'FFFE4246	16
	Timer A/D converter start request cycle set buffer register A_4	TADCOBRA_4	R/W	H'FFFF	H'FFFE4248	16
	Timer A/D converter start request cycle set buffer register B_4	TADCOBRB_4	R/W	H'FFFF	H'FFFE424A	16
Common	Timer start register	TSTR	R/W	H'00	H'FFFE4280	8
	Timer synchronous register	TSYR	R/W	H'00	H'FFFE4281	8
	Timer read/write enable register	TRWER	R/W	H'01	H'FFFE4284	8

chanhvinh.com

Channel	Register Name	Abbreviation	R/W	Initial value	Address	Access Size
Common to 3 and 4	Timer output master enable register	TOER	R/W	H'C0	H'FFFE420A	8
	Timer output control register 1	TOCR1	R/W	H'00	H'FFFE420E	8
	Timer output control register 2	TOCR2	R/W	H'00	H'FFFE420F	8
	Timer gate control register	TGCR	R/W	H80	H'FFFE420D	8
	Timer cycle data register	TCDR	R/W	H'FFFF	H'FFFE4214	16
	Timer dead time data register	TDDR	R/W	H'FFFF	H'FFFE4216	16
	Timer subcounter	TCNTS	R	H'0000	H'FFFE4220	16
	Timer cycle buffer register	TCBR	R/W	H'FFFF	H'FFFE4222	16
	Timer interrupt skipping set register	TITCR	R/W	H'00	H'FFFE4230	8
	Timer interrupt skipping counter	TITCNT	R	H'00	H'FFFE4231	8
	Timer buffer transfer set register	TBTER	R/W	H'00	H'FFFE4232	8
	Timer dead time enable register	TDER	R/W	H'01	H'FFFE4234	8
	Timer waveform control register	TWCR	R/W	H'00	H'FFFE4260	8
	Timer output level buffer register	TOLBR	R/W	H'00	H'FFFE4236	8

chanhvinh.com

12.3.1 Timer Control Register (TCR)

The TCR registers are 8-bit readable/writable registers that control the TCNT operation for each channel. This module has a total of five TCR registers, one each for channels 0 to 4. TCR register settings should be conducted only when TCNT operation is stopped.

Bit:	7	6	5	4	3	2	1	0
	CCLR[2:0]			CKEG[1:0]		TPSC[2:0]		
Initial value:	0	0	0	0	0	0	0	0
R/W:	R/W	R/W	R/W	R/W	R/W	R/W	R/W	R/W

Bit	Bit Name	Initial Value	R/W	Description
7 to 5	CCLR[2:0]	000	R/W	Counter Clear 0 to 2 These bits select the TCNT counter clearing source. See tables 12.4 and 12.5 for details.
4, 3	CKEG[1:0]	00	R/W	Clock Edge 0 and 1 These bits select the input clock edge. When the input clock is counted using both edges, the input clock period is halved (e.g. P0ϕ/4 both edges = P0ϕ/2 rising edge). If phase counting mode is used on channels 1 and 2, this setting is ignored and the phase counting mode setting has priority. Internal clock edge selection is valid when the input clock is P0ϕ/4 or slower. When P0ϕ/1, or the overflow/underflow of another channel is selected for the input clock, although values can be written, counter operation compiles with the initial value. 00: Count at rising edge 01: Count at falling edge 1x: Count at both edges
2 to 0	TPSC[2:0]	000	R/W	Time Prescaler 0 to 2 These bits select the TCNT counter clock. The clock source can be selected independently for each channel. See tables 12.6 to 12.9 for details.

[Legend]
x: Don't care

chanhvinh.com

Table 12.4 CCLR0 to CCLR2 (Channels 0, 3, and 4)

Channel	Bit 7 CCLR2	Bit 6 CCLR1	Bit 5 CCLR0	Description
0, 3, 4	0	0	0	TCNT clearing disabled
			1	TCNT cleared by TGRA compare match/input capture
		1	0	TCNT cleared by TGRB compare match/input capture
			1	TCNT cleared by counter clearing for another channel performing synchronous clearing/ synchronous operation*1
	1	0	0	TCNT clearing disabled
			1	TCNT cleared by TGRC compare match/input capture*2
		1	0	TCNT cleared by TGRD compare match/input capture*2
			1	TCNT cleared by counter clearing for another channel performing synchronous clearing/ synchronous operation*1

Notes: 1. Synchronous operation is set by setting the SYNC bit in TSYR to 1.
2. When TGRC or TGRD is used as a buffer register, TCNT is not cleared because the buffer register setting has priority, and compare match/input capture does not occur.

Table 12.5 CCLR0 to CCLR2 (Channels 1 and 2)

Channel	Bit 7 Reserved*2	Bit 6 CCLR1	Bit 5 CCLR0	Description
1, 2	0	0	0	TCNT clearing disabled
			1	TCNT cleared by TGRA compare match/input capture
		1	0	TCNT cleared by TGRB compare match/input capture
			1	TCNT cleared by counter clearing for another channel performing synchronous clearing/ synchronous operation*1

Notes: 1. Synchronous operation is selected by setting the SYNC bit in TSYR to 1.
2. Bit 7 is reserved in channels 1 and 2. It is always read as 0 and cannot be modified.

chanhvinh.com

Table 12.6 TPSC0 to TPSC2 (Channel 0)

Channel	Bit 2 TPSC2	Bit 1 TPSC1	Bit 0 TPSC0	Description
0	0	0	0	Internal clock: counts on P0ϕ/1
			1	Internal clock: counts on P0ϕ/4
		1	0	Internal clock: counts on P0ϕ/16
			1	Internal clock: counts on P0ϕ/64
	1	0	0	External clock: counts on TCLKA pin input
			1	External clock: counts on TCLKB pin input
		1	0	External clock: counts on TCLKC pin input
			1	External clock: counts on TCLKD pin input

Table 12.7 TPSC0 to TPSC2 (Channel 1)

Channel	Bit 2 TPSC2	Bit 1 TPSC1	Bit 0 TPSC0	Description
1	0	0	0	Internal clock: counts on P0ϕ/1
			1	Internal clock: counts on P0ϕ/4
		1	0	Internal clock: counts on P0ϕ/16
			1	Internal clock: counts on P0ϕ/64
	1	0	0	External clock: counts on TCLKA pin input
			1	External clock: counts on TCLKB pin input
		1	0	Internal clock: counts on P0ϕ/256
			1	Counts on TCNT_2 overflow/underflow

Note: This setting is ignored when channel 1 is in phase counting mode.

chanhvinh.com

Table 12.8 TPSC0 to TPSC2 (Channel 2)

Channel	Bit 2 TPSC2	Bit 1 TPSC1	Bit 0 TPSC0	Description
2	0	0	0	Internal clock: counts on P0φ/1
			1	Internal clock: counts on P0φ/4
		1	0	Internal clock: counts on P0φ/16
			1	Internal clock: counts on P0φ/64
	1	0	0	External clock: counts on TCLKA pin input
			1	External clock: counts on TCLKB pin input
		1	0	External clock: counts on TCLKC pin input
			1	Internal clock: counts on P0φ/1024

Note: This setting is ignored when channel 2 is in phase counting mode.

Table 12.9 TPSC0 to TPSC2 (Channels 3 and 4)

Channel	Bit 2 TPSC2	Bit 1 TPSC1	Bit 0 TPSC0	Description
3, 4	0	0	0	Internal clock: counts on P0φ/1
			1	Internal clock: counts on P0φ/4
		1	0	Internal clock: counts on P0φ/16
			1	Internal clock: counts on P0φ/64
	1	0	0	Internal clock: counts on P0φ/256
			1	Internal clock: counts on P0φ/1024
		1	0	External clock: counts on TCLKA pin input
			1	External clock: counts on TCLKB pin input

chanhvinh.com

12.3.2 Timer Mode Register (TMDR)

The TMDR registers are 8-bit readable/writable registers that are used to set the operating mode of each channel. This module has five TMDR registers, one each for channels 0 to 4. TMDR register settings should be changed only when TCNT operation is stopped.

Bit:	7	6	5	4	3	2	1	0
	-	BFE	BFB	BFA	MD[3:0]			
Initial value:	0	0	0	0	0	0	0	0
R/W:	R	R/W	R/W	R/W	R/W	R/W	R/W	R/W

Bit	Bit Name	Initial Value	R/W	Description
7	—	0	R	Reserved This bit is always read as 0. The write value should always be 0.
6	BFE	0	R/W	Buffer Operation E Specifies whether TGRE_0 and TGRF_0 are to operate in the normal way or to be used together for buffer operation. TGRF compare match is generated when TGRF is used as the buffer register. In channels 1 to 4, this bit is reserved. It is always read as 0 and the write value should always be 0. 0: TGRE_0 and TGRF_0 operate normally 1: TGRE_0 and TGRF_0 used together for buffer operation

chanhvinh.com

Bit	Bit Name	Initial Value	R/W	Description
5	BFB	0	R/W	Buffer Operation B Specifies whether TGRB is to operate in the normal way, or TGRB and TGRD are to be used together for buffer operation. When TGRD is used as a buffer register, TGRD input capture/output compare is not generated in a mode other than complementary PWM. In channels 1 and 2, which have no TGRD, bit 5 is reserved. It is always read as 0 and cannot be modified. 0: TGRB and TGRD operate normally 1: TGRB and TGRD used together for buffer operation
4	BFA	0	R/W	Buffer Operation A Specifies whether TGRA is to operate in the normal way, or TGRA and TGRC are to be used together for buffer operation. When TGRC is used as a buffer register, TGRC input capture/output compare is not generated in a mode other than complementary PWM. TGRC compare match is generated when in complementary PWM mode. When compare match for channel 4 occurs during the Tb period in complementary PWM mode, TGFC is set. Therefore, set the TGIEC bit in the timer interrupt enable register 4 (TIER_4) to 0. In channels 1 and 2, which have no TGRC, bit 4 is reserved. It is always read as 0 and cannot be modified. 0: TGRA and TGRC operate normally 1: TGRA and TGRC used together for buffer operation
3 to 0	MD[3:0]	0000	R/W	Modes 0 to 3 These bits are used to set the timer operating mode. See table 12.10 for details.

chanhvinh.com

Table 12.10 Setting of Operation Mode by Bits MD0 to MD3

Bit 3 MD3	Bit 2 MD2	Bit 1 MD1	Bit 0 MD0	Description
0	0	0	0	Normal operation
			1	Setting prohibited
		1	0	PWM mode 1
			1	PWM mode 2*[1]
	1	0	0	Phase counting mode 1*[2]
			1	Phase counting mode 2*[2]
		1	0	Phase counting mode 3*[2]
			1	Phase counting mode 4*[2]
1	0	0	0	Reset synchronous PWM mode*[3]
			1	Setting prohibited
		1	X	Setting prohibited
	1	0	0	Setting prohibited
			1	Complementary PWM mode 1 (transmit at crest)*[3]
		1	0	Complementary PWM mode 2 (transmit at trough)*[3]
			1	Complementary PWM mode 2 (transmit at crest and trough)*[3]

[Legend]

X: Don't care

Notes: 1. PWM mode 2 cannot be set for channels 3 and 4.

2. Phase counting mode cannot be set for channels 0, 3, and 4.

3. Reset synchronous PWM mode, complementary PWM mode can only be set for channel 3. When channel 3 is set to reset synchronous PWM mode or complementary PWM mode, the channel 4 settings become ineffective and automatically conform to the channel 3 settings. However, do not set channel 4 to reset synchronous PWM mode or complementary PWM mode. Reset synchronous PWM mode and complementary PWM mode cannot be set for channels 0, 1, and 2.

chanhvinh.com

12.3.3 Timer I/O Control Register (TIOR)

The TIOR registers are 8-bit readable/writable registers that control the TGR registers. This module has a total of eight TIOR registers, two each for channels 0, 3, and 4, one each for channels 1 and 2.

TIOR should be set while TMDR is set in normal operation, PWM mode, or phase counting mode.

The initial output specified by TIOR is valid when the counter is stopped (the CST bit in TSTR is cleared to 0). Note also that, in PWM mode 2, the output at the point at which the counter is cleared to 0 is specified.

When TGRC or TGRD is designated for buffer operation, this setting is invalid and the register operates as a buffer register.

- TIORH_0, TIOR_1, TIOR_2, TIORH_3, TIORH_4

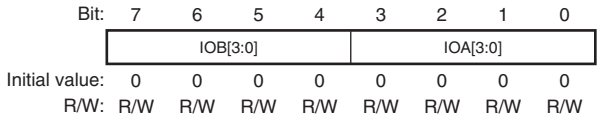

Bit	Bit Name	Initial Value	R/W	Description
7 to 4	IOB[3:0]	0000	R/W	I/O Control B0 to B3 Specify the function of TGRB. See the following tables. TIORH_0: Table 12.11 TIOR_1: Table 12.13 TIOR_2: Table 12.14 TIORH_3: Table 12.15 TIORH_4: Table 12.17
3 to 0	IOA[3:0]	0000	R/W	I/O Control A0 to A3 Specify the function of TGRA. See the following tables. TIORH_0: Table 12.19 TIOR_1: Table 12.21 TIOR_2: Table 12.22 TIORH_3: Table 12.23 TIORH_4: Table 12.25

chanhvinh.com

- TIORL_0, TIORL_3, TIORL_4

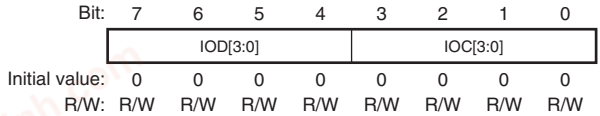

Bit	Bit Name	Initial Value	R/W	Description
7 to 4	IOD[3:0]	0000	R/W	I/O Control D0 to D3 Specify the function of TGRD. See the following tables. TIORL_0: Table 12.12 TIORL_3: Table 12.16 TIORL_4: Table 12.18
3 to 0	IOC[3:0]	0000	R/W	I/O Control C0 to C3 Specify the function of TGRC. See the following tables. TIORL_0: Table 12.20 TIORL_3: Table 12.24 TIORL_4: Table 12.26

chanhvinh.com

Table 12.11 TIORH_0 (Channel 0)

				Description	
Bit 7 IOB3	**Bit 6 IOB2**	**Bit 5 IOB1**	**Bit 4 IOB0**	**TGRB_0 Function**	**TIOC0B Pin Function**
0	0	0	0	Output compare register	Output retained*
			1		Initial output is 0 0 output at compare match
		1	0		Initial output is 0 1 output at compare match
			1		Initial output is 0 Toggle output at compare match
	1	0	0		Output retained
			1		Initial output is 1 0 output at compare match
		1	0		Initial output is 1 1 output at compare match
			1		Initial output is 1 Toggle output at compare match
1	0	0	0	Input capture register	Input capture at rising edge
			1		Input capture at falling edge
		1	X		Input capture at both edges
	1	X	X		Capture input source is channel 1/count clock Input capture at TCNT_1 count-up/count-down

[Legend]

X: Don't care

Note: * After power-on reset, 0 is output until TIOR is set.

chanhvinh.com

Table 12.12 TIORL_0 (Channel 0)

				Description	
Bit 7 IOD3	**Bit 6 IOD2**	**Bit 5 IOD1**	**Bit 4 IOD0**	**TGRD_0 Function**	**TIOC0D Pin Function**
0	0	0	0	Output compare register*2	Output retained*1
			1		Initial output is 0 0 output at compare match
		1	0		Initial output is 0 1 output at compare match
			1		Initial output is 0 Toggle output at compare match
	1	0	0		Output retained
			1		Initial output is 1 0 output at compare match
		1	0		Initial output is 1 1 output at compare match
			1		Initial output is 1 Toggle output at compare match
1	0	0	0	Input capture register*2	Input capture at rising edge
			1		Input capture at falling edge
		1	X		Input capture at both edges
	1	X	X		Capture input source is channel 1/count clock Input capture at TCNT_1 count-up/count-down

[Legend]

X: Don't care

Notes: 1. After power-on reset, 0 is output until TIOR is set.

2. When the BFB bit in TMDR_0 is set to 1 and TGRD_0 is used as a buffer register, this setting is invalid and input capture/output compare is not generated.

chanhvinh.com

Table 12.13 TIOR_1 (Channel 1)

				Description	
Bit 7 IOB3	**Bit 6 IOB2**	**Bit 5 IOB1**	**Bit 4 IOB0**	**TGRB_1 Function**	**TIOC1B Pin Function**
0	0	0	0	Output compare register	Output retained*
			1		Initial output is 0 0 output at compare match
		1	0		Initial output is 0 1 output at compare match
			1		Initial output is 0 Toggle output at compare match
	1	0	0		Output retained
			1		Initial output is 1 0 output at compare match
		1	0		Initial output is 1 1 output at compare match
			1		Initial output is 1 Toggle output at compare match
1	0	0	0	Input capture register	Input capture at rising edge
			1		Input capture at falling edge
		1	X		Input capture at both edges
	1	X	X		Input capture at generation of TGRC_0 compare match/input capture

[Legend]

X: Don't care

Note: * After power-on reset, 0 is output until TIOR is set.

chanhvinh.com

Table 12.14 TIOR_2 (Channel 2)

				Description	
Bit 7 IOB3	**Bit 6 IOB2**	**Bit 5 IOB1**	**Bit 4 IOB0**	**TGRB_2 Function**	**TIOC2B Pin Function**
0	0	0	0	Output compare register	Output retained*
			1		Initial output is 0 0 output at compare match
		1	0		Initial output is 0 1 output at compare match
			1		Initial output is 0 Toggle output at compare match
	1	0	0		Output retained
			1		Initial output is 1 0 output at compare match
		1	0		Initial output is 1 1 output at compare match
			1		Initial output is 1 Toggle output at compare match
1	X	0	0	Input capture register	Input capture at rising edge
			1		Input capture at falling edge
		1	X		Input capture at both edges

[Legend]

X: Don't care

Note: * After power-on reset, 0 is output until TIOR is set.

chanhvinh.com

Table 12.15 TIORH_3 (Channel 3)

				Description	
Bit 7 IOB3	**Bit 6 IOB2**	**Bit 5 IOB1**	**Bit 4 IOB0**	**TGRB_3 Function**	**TIOC3B Pin Function**
0	0	0	0	Output compare register	Output retained*
			1		Initial output is 0 0 output at compare match
		1	0		Initial output is 0 1 output at compare match
			1		Initial output is 0 Toggle output at compare match
	1	0	0		Output retained
			1		Initial output is 1 0 output at compare match
		1	0		Initial output is 1 1 output at compare match
			1		Initial output is 1 Toggle output at compare match
1	X	0	0	Input capture register	Input capture at rising edge
			1		Input capture at falling edge
		1	X		Input capture at both edges

[Legend]

X: Don't care

Note: * After power-on reset, 0 is output until TIOR is set.

chanhvinh.com

Table 12.16 TIORL_3 (Channel 3)

				Description	
Bit 7 IOD3	**Bit 6 IOD2**	**Bit 5 IOD1**	**Bit 4 IOD0**	**TGRD_3 Function**	**TIOC3D Pin Function**
0	0	0	0	Output compare register*2	Output retained*1
			1		Initial output is 0 0 output at compare match
		1	0		Initial output is 0 1 output at compare match
			1		Initial output is 0 Toggle output at compare match
	1	0	0		Output retained
			1		Initial output is 1 0 output at compare match
		1	0		Initial output is 1 1 output at compare match
			1		Initial output is 1 Toggle output at compare match
1	X	0	0	Input capture register*2	Input capture at rising edge
			1		Input capture at falling edge
		1	X		Input capture at both edges

[Legend]

X: Don't care

Notes: 1. After power-on reset, 0 is output until TIOR is set.

2. When the BFB bit in TMDR_3 is set to 1 and TGRD_3 is used as a buffer register, this setting is invalid and input capture/output compare is not generated.

chanhvinh.com

Table 12.17 TIORH_4 (Channel 4)

				Description	
Bit 7 IOB3	**Bit 6 IOB2**	**Bit 5 IOB1**	**Bit 4 IOB0**	**TGRB_4 Function**	**TIOC4B Pin Function**
0	0	0	0	Output compare register	Output retained*
			1		Initial output is 0 0 output at compare match
		1	0		Initial output is 0 1 output at compare match
			1		Initial output is 0 Toggle output at compare match
	1	0	0		Output retained
			1		Initial output is 1 0 output at compare match
		1	0		Initial output is 1 1 output at compare match
			1		Initial output is 1 Toggle output at compare match
1	X	0	0	Input capture register	Input capture at rising edge
			1		Input capture at falling edge
		1	X		Input capture at both edges

[Legend]

X: Don't care

Note: * After power-on reset, 0 is output until TIOR is set.

chanhvinh.com

Table 12.18 TIORL_4 (Channel 4)

				Description	
Bit 7 IOD3	**Bit 6 IOD2**	**Bit 5 IOD1**	**Bit 4 IOD0**	**TGRD_4 Function**	**TIOC4D Pin Function**
0	0	0	0	Output compare register*2	Output retained*1
			1		Initial output is 0 0 output at compare match
		1	0		Initial output is 0 1 output at compare match
			1		Initial output is 0 Toggle output at compare match
	1	0	0		Output retained
			1		Initial output is 1 0 output at compare match
		1	0		Initial output is 1 1 output at compare match
			1		Initial output is 1 Toggle output at compare match
1	X	0	0	Input capture register*2	Input capture at rising edge
			1		Input capture at falling edge
		1	X		Input capture at both edges

[Legend]

X: Don't care

Notes: 1. After power-on reset, 0 is output until TIOR is set.

2. When the BFB bit in TMDR_4 is set to 1 and TGRD_4 is used as a buffer register, this setting is invalid and input capture/output compare is not generated.

chanhvinh.com

Table 12.19 TIORH_0 (Channel 0)

				Description	
Bit 3 IOA3	**Bit 2 IOA2**	**Bit 1 IOA1**	**Bit 0 IOA0**	**TGRA_0 Function**	**TIOC0A Pin Function**
0	0	0	0	Output compare register	Output retained*
			1		Initial output is 0 0 output at compare match
		1	0		Initial output is 0 1 output at compare match
			1		Initial output is 0 Toggle output at compare match
	1	0	0		Output retained
			1		Initial output is 1 0 output at compare match
		1	0		Initial output is 1 1 output at compare match
			1		Initial output is 1 Toggle output at compare match
1	0	0	0	Input capture register	Input capture at rising edge
			1		Input capture at falling edge
		1	X		Input capture at both edges
	1	X	X		Capture input source is channel 1/count clock Input capture at TCNT_1 count-up/count-down

[Legend]

X: Don't care

Note: * After power-on reset, 0 is output until TIOR is set.

chanhvinh.com

Table 12.20 TIORL_0 (Channel 0)

				Description	
Bit 3 IOC3	**Bit 2 IOC2**	**Bit 1 IOC1**	**Bit 0 IOC0**	**TGRC_0 Function**	**TIOC0C Pin Function**
0	0	0	0	Output compare register*2	Output retained*1
			1		Initial output is 0 0 output at compare match
		1	0		Initial output is 0 1 output at compare match
			1		Initial output is 0 Toggle output at compare match
	1	0	0		Output retained
			1		Initial output is 1 0 output at compare match
		1	0		Initial output is 1 1 output at compare match
			1		Initial output is 1 Toggle output at compare match
1	0	0	0	Input capture register*2	Input capture at rising edge
			1		Input capture at falling edge
		1	X		Input capture at both edges
	1	X	X		Capture input source is channel 1/count clock Input capture at TCNT_1 count-up/count-down

[Legend]

X: Don't care

Notes: 1. After power-on reset, 0 is output until TIOR is set.

2. When the BFA bit in TMDR_0 is set to 1 and TGRC_0 is used as a buffer register, this setting is invalid and input capture/output compare is not generated.

chanhvinh.com

Table 12.21 TIOR_1 (Channel 1)

				Description	
Bit 3 IOA3	**Bit 2 IOA2**	**Bit 1 IOA1**	**Bit 0 IOA0**	**TGRA_1 Function**	**TIOC1A Pin Function**
0	0	0	0	Output compare register	Output retained*
			1		Initial output is 0 0 output at compare match
		1	0		Initial output is 0 1 output at compare match
			1		Initial output is 0 Toggle output at compare match
	1	0	0		Output retained
			1		Initial output is 1 0 output at compare match
		1	0		Initial output is 1 1 output at compare match
			1		Initial output is 1 Toggle output at compare match
1	0	0	0	Input capture register	Input capture at rising edge
			1		Input capture at falling edge
		1	X		Input capture at both edges
	1	X	X		Input capture at generation of channel 0/TGRA_0 compare match/input capture

[Legend]

X: Don't care

Note: * After power-on reset, 0 is output until TIOR is set.

chanhvinh.com

Table 12.22 TIOR_2 (Channel 2)

				Description	
Bit 3 IOA3	**Bit 2 IOA2**	**Bit 1 IOA1**	**Bit 0 IOA0**	**TGRA_2 Function**	**TIOC2A Pin Function**
0	0	0	0	Output compare register	Output retained*
			1		Initial output is 0 0 output at compare match
		1	0		Initial output is 0 1 output at compare match
			1		Initial output is 0 Toggle output at compare match
	1	0	0		Output retained
			1		Initial output is 1 0 output at compare match
		1	0		Initial output is 1 1 output at compare match
			1		Initial output is 1 Toggle output at compare match
1	X	0	0	Input capture register	Input capture at rising edge
			1		Input capture at falling edge
		1	X		Input capture at both edges

[Legend]

X: Don't care

Note: * After power-on reset, 0 is output until TIOR is set.

chanhvinh.com

Table 12.23 TIORH_3 (Channel 3)

				Description	
Bit 3 IOA3	**Bit 2 IOA2**	**Bit 1 IOA1**	**Bit 0 IOA0**	**TGRA_3 Function**	**TIOC3A Pin Function**
0	0	0	0	Output compare register	Output retained*
			1		Initial output is 0 0 output at compare match
		1	0		Initial output is 0 1 output at compare match
			1		Initial output is 0 Toggle output at compare match
	1	0	0		Output retained
			1		Initial output is 1 0 output at compare match
		1	0		Initial output is 1 1 output at compare match
			1		Initial output is 1 Toggle output at compare match
1	X	0	0	Input capture register	Input capture at rising edge
			1		Input capture at falling edge
		1	X		Input capture at both edges

[Legend]

X: Don't care

Note: * After power-on reset, 0 is output until TIOR is set.

chanhvinh.com

Table 12.24 TIORL_3 (Channel 3)

				Description	
Bit 3 IOC3	**Bit 2 IOC2**	**Bit 1 IOC1**	**Bit 0 IOC0**	**TGRC_3 Function**	**TIOC3C Pin Function**
0	0	0	0	Output compare register*2	Output retained*1
			1		Initial output is 0 0 output at compare match
		1	0		Initial output is 0 1 output at compare match
			1		Initial output is 0 Toggle output at compare match
	1	0	0		Output retained
			1		Initial output is 1 0 output at compare match
		1	0		Initial output is 1 1 output at compare match
			1		Initial output is 1 Toggle output at compare match
1	X	0	0	Input capture register*2	Input capture at rising edge
			1		Input capture at falling edge
		1	X		Input capture at both edges

[Legend]

X: Don't care

Notes: 1. After power-on reset, 0 is output until TIOR is set.

2. When the BFA bit in TMDR_3 is set to 1 and TGRC_3 is used as a buffer register, this setting is invalid and input capture/output compare is not generated.

chanhvinh.com

Table 12.25 TIORH_4 (Channel 4)

				Description	
Bit 3 IOA3	**Bit 2 IOA2**	**Bit 1 IOA1**	**Bit 0 IOA0**	**TGRA_4 Function**	**TIOC4A Pin Function**
0	0	0	0	Output compare register	Output retained*
			1		Initial output is 0 0 output at compare match
		1	0		Initial output is 0 1 output at compare match
			1		Initial output is 0 Toggle output at compare match
	1	0	0		Output retained
			1		Initial output is 1 0 output at compare match
		1	0		Initial output is 1 1 output at compare match
			1		Initial output is 1 Toggle output at compare match
1	X	0	0	Input capture register	Input capture at rising edge
			1		Input capture at falling edge
		1	X		Input capture at both edges

[Legend]

X: Don't care

Note: * After power-on reset, 0 is output until TIOR is set.

chanhvinh.com

Table 12.26 TIORL_4 (Channel 4)

				Description	
Bit 3 IOC3	**Bit 2 IOC2**	**Bit 1 IOC1**	**Bit 0 IOC0**	**TGRC_4 Function**	**TIOC4C Pin Function**
0	0	0	0	Output compare register*2	Output retained*1
			1		Initial output is 0 0 output at compare match
		1	0		Initial output is 0 1 output at compare match
			1		Initial output is 0 Toggle output at compare match
	1	0	0		Output retained
			1		Initial output is 1 0 output at compare match
		1	0		Initial output is 1 1 output at compare match
			1		Initial output is 1 Toggle output at compare match
1	X	0	0	Input capture register*2	Input capture at rising edge
			1		Input capture at falling edge
		1	X		Input capture at both edges

[Legend]

X: Don't care

Notes: 1. After power-on reset, 0 is output until TIOR is set.

2. When the BFA bit in TMDR_4 is set to 1 and TGRC_4 is used as a buffer register, this setting is invalid and input capture/output compare is not generated.

chanhvinh.com

12.3.4 Timer Interrupt Enable Register (TIER)

The TIER registers are 8-bit readable/writable registers that control enabling or disabling of interrupt requests for each channel. This module has six TIER registers, two for channel 0 and one each for channels 1 to 4.

- TIER_0, TIER_1, TIER_2, TIER_3, TIER_4

Bit:	7	6	5	4	3	2	1	0
	TTGE	TTGE2	TCIEU	TCIEV	TGIED	TGIEC	TGIEB	TGIEA
Initial value:	0	0	0	0	0	0	0	0
R/W:	R/W	R/W	R/W	R/W	R/W	R/W	R/W	R/W

Bit	Bit Name	Initial Value	R/W	Description
7	TTGE	0	R/W	A/D Converter Start Request Enable Enables or disables generation of A/D converter start requests by TGRA input capture/compare match. 0: A/D converter start request generation disabled 1: A/D converter start request generation enabled
6	TTGE2	0	R/W	A/D Converter Start Request Enable 2 Enables or disables generation of A/D converter start requests by TCNT_4 underflow (trough) in complementary PWM mode. In channels 0 to 3, bit 6 is reserved. It is always read as 0 and the write value should always be 0. 0: A/D converter start request generation by TCNT_4 underflow (trough) disabled 1: A/D converter start request generation by TCNT_4 underflow (trough) enabled
5	TCIEU	0	R/W	Underflow Interrupt Enable Enables or disables interrupt requests (TCIU) by the TCFU flag when the TCFU flag in TSR is set to 1 in channels 1 and 2. In channels 0, 3, and 4, bit 5 is reserved. It is always read as 0 and the write value should always be 0. 0: Interrupt requests (TCIU) by TCFU disabled 1: Interrupt requests (TCIU) by TCFU enabled

chanhvinh.com

Bit	Bit Name	Initial Value	R/W	Description
4	TCIEV	0	R/W	Overflow Interrupt Enable Enables or disables interrupt requests (TCIV) by the TCFV flag when the TCFV flag in TSR is set to 1. 0: Interrupt requests (TCIV) by TCFV disabled 1: Interrupt requests (TCIV) by TCFV enabled
3	TGIED	0	R/W	TGR Interrupt Enable D Enables or disables interrupt requests (TGID) by the TGFD bit when the TGFD bit in TSR is set to 1 in channels 0, 3, and 4. In channels 1 and 2, bit 3 is reserved. It is always read as 0 and the write value should always be 0. 0: Interrupt requests (TGID) by TGFD bit disabled 1: Interrupt requests (TGID) by TGFD bit enabled
2	TGIEC	0	R/W	TGR Interrupt Enable C Enables or disables interrupt requests (TGIC) by the TGFC bit when the TGFC bit in TSR is set to 1 in channels 0, 3, and 4. In channels 1 and 2, bit 2 is reserved. It is always read as 0 and the write value should always be 0. 0: Interrupt requests (TGIC) by TGFC bit disabled 1: Interrupt requests (TGIC) by TGFC bit enabled
1	TGIEB	0	R/W	TGR Interrupt Enable B Enables or disables interrupt requests (TGIB) by the TGFB bit when the TGFB bit in TSR is set to 1. 0: Interrupt requests (TGIB) by TGFB bit disabled 1: Interrupt requests (TGIB) by TGFB bit enabled
0	TGIEA	0	R/W	TGR Interrupt Enable A Enables or disables interrupt requests (TGIA) by the TGFA bit when the TGFA bit in TSR is set to 1. 0: Interrupt requests (TGIA) by TGFA bit disabled 1: Interrupt requests (TGIA) by TGFA bit enabled

chanhvinh.com

- TIER2_0

Bit:	7	6	5	4	3	2	1	0
	TTGE2	-	-	-	-	-	TGIEF	TGIEE
Initial value:	0	0	0	0	0	0	0	0
R/W:	R/W	R	R	R	R	R	R/W	R/W

Bit	Bit Name	Initial Value	R/W	Description
7	TTGE2	0	R/W	A/D Converter Start Request Enable 2 Enables or disables generation of A/D converter start requests by compare match between TCNT_0 and TGRE_0. 0: A/D converter start request generation by compare match between TCNT_0 and TGRE_0 disabled 1: A/D converter start request generation by compare match between TCNT_0 and TGRE_0 enabled
6 to 2	—	All 0	R	Reserved These bits are always read as 0. The write value should always be 0.
1	TGIEF	0	R/W	TGR Interrupt Enable F Enables or disables interrupt requests by compare match between TCNT_0 and TGRF_0. 0: Interrupt requests (TGIF) by TGFE bit disabled 1: Interrupt requests (TGIF) by TGFE bit enabled
0	TGIEE	0	R/W	TGR Interrupt Enable E Enables or disables interrupt requests by compare match between TCNT_0 and TGRE_0. 0: Interrupt requests (TGIE) by TGEE bit disabled 1: Interrupt requests (TGIE) by TGEE bit enabled

chanhvinh.com

12.3.5 Timer Status Register (TSR)

The TSR registers are 8-bit readable/writable registers that indicate the status of each channel. This module has six TSR registers, two for channel 0 and one each for channels 1 to 4.

- TSR_0, TSR_1, TSR_2, TSR_3, TSR_4

Bit:	7	6	5	4	3	2	1	0
	TCFD	-	TCFU	TCFV	TGFD	TGFC	TGFB	TGFA
Initial value:	1	1	0	0	0	0	0	0
R/W:	R	R	R/(W)*1	R/(W)*1	R/(W)*1	R/(W)*1	R/(W)*1	R/(W)*1

Note: 1. Writing 0 to this bit after reading it as 1 clears the flag and is the only allowed way.

Bit	Bit Name	Initial Value	R/W	Description
7	TCFD	1	R	Count Direction Flag Status flag that shows the direction in which TCNT counts in channels 1 to 4. In channel 0, bit 7 is reserved. It is always read as 1 and the write value should always be 1. 0: TCNT counts down 1: TCNT counts up
6	—	1	R	Reserved This bit is always read as 1. The write value should always be 1.
5	TCFU	0	R/(W)*1	Underflow Flag Status flag that indicates that TCNT underflow has occurred when channels 1 and 2 are set to phase counting mode. Only 0 can be written, for flag clearing. In channels 0, 3, and 4, bit 5 is reserved. It is always read as 0 and the write value should always be 0. [Clearing condition] • When 0 is written to TCFU after reading TCFU = 1*2 [Setting condition] • When the TCNT value underflows (changes from H'0000 to H'FFFF)

chanhvinh.com

Bit	Bit Name	Initial Value	R/W	Description
4	TCFV	0	R/(W)*1	Overflow Flag Status flag that indicates that TCNT overflow has occurred. Only 0 can be written, for flag clearing. [Clearing condition] • When 0 is written to TCFV after reading TCFV = 1*2 [Setting condition] • When the TCNT value overflows (changes from H'FFFF to H'0000) In channel 4, when the TCNT_4 value underflows (changes from H'0001 to H'0000) in complementary PWM mode, this flag is also set.
3	TGFD	0	R/(W)*1	Input Capture/Output Compare Flag D Status flag that indicates the occurrence of TGRD input capture or compare match in channels 0, 3, and 4. Only 0 can be written, for flag clearing. In channels 1 and 2, bit 3 is reserved. It is always read as 0 and the write value should always be 0. [Clearing condition] • When 0 is written to TGFD after reading TGFD = 1*2 [Setting conditions] • When TCNT = TGRD and TGRD is functioning as output compare register • When TCNT value is transferred to TGRD by input capture signal and TGRD is functioning as input capture register

chanhvinh.com

Bit	Bit Name	Initial Value	R/W	Description
2	TGFC	0	R/(W)*1	Input Capture/Output Compare Flag C Status flag that indicates the occurrence of TGRC input capture or compare match in channels 0, 3, and 4. Only 0 can be written, for flag clearing. In channels 1 and 2, bit 2 is reserved. It is always read as 0 and the write value should always be 0. [Clearing condition] • When 0 is written to TGFC after reading TGFC = 1*2 [Setting conditions] • When TCNT = TGRC and TGRC is functioning as output compare register • When TCNT value is transferred to TGRC by input capture signal and TGRC is functioning as input capture register
1	TGFB	0	R/(W)*1	Input Capture/Output Compare Flag B Status flag that indicates the occurrence of TGRB input capture or compare match. Only 0 can be written, for flag clearing. [Clearing condition] • When 0 is written to TGFB after reading TGFB = 1*2 [Setting conditions] • When TCNT = TGRB and TGRB is functioning as output compare register • When TCNT value is transferred to TGRB by input capture signal and TGRB is functioning as input capture register

chanhvinh.com

Bit	Bit Name	Initial Value	R/W	Description
0	TGFA	0	R/(W)*[1]	Input Capture/Output Compare Flag A Status flag that indicates the occurrence of TGRA input capture or compare match. Only 0 can be written, for flag clearing. [Clearing conditions] • When the direct memory access controller is activated by TGIA interrupt • When 0 is written to TGFA after reading TGFA = 1*[2] [Setting conditions] • When TCNT = TGRA and TGRA is functioning as output compare register • When TCNT value is transferred to TGRA by input capture signal and TGRA is functioning as input capture register

Notes: 1. Writing 0 to this bit after reading it as 1 clears the flag.
2. If the next flag is set before TGFA is cleared to 0 after reading TGFA = 1, TGFA remains 1 even when 0 is written to. In this case, read TGFA = 1 again to clear TGFA to 0.

chanhvinh.com

- TSR2_0

Bit:	7	6	5	4	3	2	1	0
	-	-	-	-	-	-	TGFF	TGFE
Initial value:	1	1	0	0	0	0	0	0
R/W:	R	R	R	R	R	R	R/(W)*1	R/(W)*1

Note: 1. Writing 0 to this bit after reading it as 1 clears the flag and is the only allowed way.

Bit	Bit Name	Initial Value	R/W	Description
7, 6	—	All 1	R	Reserved These bits are always read as 1. The write value should always be 1.
5 to 2	—	All 0	R	Reserved These bits are always read as 0. The write value should always be 0.
1	TGFF	0	R/(W)*1	Compare Match Flag F Status flag that indicates the occurrence of compare match between TCNT_0 and TGRF_0. [Clearing condition] • When 0 is written to TGFF after reading TGFF = 1*2 [Setting condition] • When TCNT_0 = TGRF_0 and TGRF_0 is functioning as compare register
0	TGFE	0	R/(W)*1	Compare Match Flag E Status flag that indicates the occurrence of compare match between TCNT_0 and TGRE_0. [Clearing condition] • When 0 is written to TGFE after reading TGFE = 1*2 [Setting condition] • When TCNT_0 = TGRE_0 and TGRE_0 is functioning as compare register

Notes: 1. Writing 0 to this bit after reading it as 1 clears the flag.
2. If the next flag is set before TGFA is cleared to 0 after reading TGFA = 1, TGFA remains 1 even when 0 is written to. In this case, read TGFA = 1 again to clear TGFA to 0.

chanhvinh.com

12.3.6 Timer Buffer Operation Transfer Mode Register (TBTM)

The TBTM registers are 8-bit readable/writable registers that specify the timing for transferring data from the buffer register to the timer general register in PWM mode. This module has three TBTM registers, one each for channels 0, 3, and 4.

Bit:	7	6	5	4	3	2	1	0
	-	-	-	-	-	TTSE	TTSB	TTSA
Initial value:	0	0	0	0	0	0	0	0
R/W:	R	R	R	R	R	R/W	R/W	R/W

Bit	Bit Name	Initial Value	R/W	Description
7 to 3	—	All 0	R	Reserved These bits are always read as 0. The write value should always be 0.
2	TTSE	0	R/W	Timing Select E Specifies the timing for transferring data from TGRF_0 to TGRE_0 when they are used together for buffer operation. In channels 3 and 4, bit 2 is reserved. It is always read as 0 and the write value should always be 0. 0: When compare match E occurs in channel 0 1: When TCNT_0 is cleared
1	TTSB	0	R/W	Timing Select B Specifies the timing for transferring data from TGRD to TGRB in each channel when they are used together for buffer operation. 0: When compare match B occurs in each channel 1: When TCNT is cleared in each channel
0	TTSA	0	R/W	Timing Select A Specifies the timing for transferring data from TGRC to TGRA in each channel when they are used together for buffer operation. 0: When compare match A occurs in each channel 1: When TCNT is cleared in each channel

chanhvinh.com

12.3.7 Timer Input Capture Control Register (TICCR)

TICCR is an 8-bit readable/writable register that specifies input capture conditions when TCNT_1 and TCNT_2 are cascaded. This module has one TICCR in channel 1.

Bit:	7	6	5	4	3	2	1	0
	-	-	-	-	I2BE	I2AE	I1BE	I1AE
Initial value:	0	0	0	0	0	0	0	0
R/W:	R	R	R	R	R/W	R/W	R/W	R/W

Bit	Bit Name	Initial Value	R/W	Description
7 to 4	—	All 0	R	Reserved These bits are always read as 0. The write value should always be 0.
3	I2BE	0	R/W	Input Capture Enable Specifies whether to include the TIOC2B pin in the TGRB_1 input capture conditions. 0: Does not include the TIOC2B pin in the TGRB_1 input capture conditions 1: Includes the TIOC2B pin in the TGRB_1 input capture conditions
2	I2AE	0	R/W	Input Capture Enable Specifies whether to include the TIOC2A pin in the TGRA_1 input capture conditions. 0: Does not include the TIOC2A pin in the TGRA_1 input capture conditions 1: Includes the TIOC2A pin in the TGRA_1 input capture conditions
1	I1BE	0	R/W	Input Capture Enable Specifies whether to include the TIOC1B pin in the TGRB_2 input capture conditions. 0: Does not include the TIOC1B pin in the TGRB_2 input capture conditions 1: Includes the TIOC1B pin in the TGRB_2 input capture conditions

chanhvinh.com

Bit	Bit Name	Initial Value	R/W	Description
0	I1AE	0	R/W	Input Capture Enable Specifies whether to include the TIOC1A pin in the TGRA_2 input capture conditions. 0: Does not include the TIOC1A pin in the TGRA_2 input capture conditions 1: Includes the TIOC1A pin in the TGRA_2 input capture conditions

chanhvinh.com

12.3.8 Timer A/D Converter Start Request Control Register (TADCR)

TADCR is a 16-bit readable/writable register that enables or disables A/D converter start requests and specifies whether to link A/D converter start requests with interrupt skipping operation. This module has one TADCR in channel 4.

Bit:	15	14	13	12	11	10	9	8	7	6	5	4	3	2	1	0
	BF[1:0]		-	-	-	-	-	-	UT4AE	DT4AE	UT4BE	DT4BE	ITA3AE	ITA4VE	ITB3AE	ITB4VE
Initial value:	0	0	0	0	0	0	0	0	0	0*	0	0*	0*	0*	0*	0*
R/W:	R/W	R/W	R	R	R	R	R	R	R/W	R/W	R/W	R/W	R/W	R/W	R/W	R/W

Note: * Do not set to 1 when complementary PWM mode is not selected.

Bit	Bit Name	Initial Value	R/W	Description
15, 14	BF[1:0]	00	R/W	TADCOBRA_4/TADCOBRB_4 Transfer Timing Select Select the timing for transferring data from TADCOBRA_4 and TADCOBRB_4 to TADCORA_4 and TADCORB_4. For details, see table 12.27.
13 to 8	—	All 0	R	Reserved These bits are always read as 0. The write value should always be 0.
7	UT4AE	0	R/W	Up-Count TRG4AN Enable Enables or disables A/D converter start requests (TRG4AN) during TCNT_4 up-count operation. 0: A/D converter start requests (TRG4AN) disabled during TCNT_4 up-count operation 1: A/D converter start requests (TRG4AN) enabled during TCNT_4 up-count operation
6	DT4AE	0*	R/W	Down-Count TRG4AN Enable Enables or disables A/D converter start requests (TRG4AN) during TCNT_4 down-count operation. 0: A/D converter start requests (TRG4AN) disabled during TCNT_4 down-count operation 1: A/D converter start requests (TRG4AN) enabled during TCNT_4 down-count operation

chanhvinh.com

Bit	Bit Name	Initial Value	R/W	Description
5	UT4BE	0	R/W	Up-Count TRG4BN Enable Enables or disables A/D converter start requests (TRG4BN) during TCNT_4 up-count operation. 0: A/D converter start requests (TRG4BN) disabled during TCNT_4 up-count operation 1: A/D converter start requests (TRG4BN) enabled during TCNT_4 up-count operation
4	DT4BE	0*	R/W	Down-Count TRG4BN Enable Enables or disables A/D converter start requests (TRG4BN) during TCNT_4 down-count operation. 0: A/D converter start requests (TRG4BN) disabled during TCNT_4 down-count operation 1: A/D converter start requests (TRG4BN) enabled during TCNT_4 down-count operation
3	ITA3AE	0*	R/W	TGIA_3 Interrupt Skipping Link Enable Select whether to link A/D converter start requests (TRG4AN) with TGIA_3 interrupt skipping operation. 0: Does not link with TGIA_3 interrupt skipping 1: Links with TGIA_3 interrupt skipping
2	ITA4VE	0*	R/W	TCIV_4 Interrupt Skipping Link Enable Select whether to link A/D converter start requests (TRG4AN) with TCIV_4 interrupt skipping operation. 0: Does not link with TCIV_4 interrupt skipping 1: Links with TCIV_4 interrupt skipping
1	ITB3AE	0*	R/W	TGIA_3 Interrupt Skipping Link Enable Select whether to link A/D converter start requests (TRG4BN) with TGIA_3 interrupt skipping operation. 0: Does not link with TGIA_3 interrupt skipping 1: Links with TGIA_3 interrupt skipping

chanhvinh.com

Bit	Bit Name	Initial Value	R/W	Description
0	ITB4VE	0*	R/W	TCIV_4 Interrupt Skipping Link Enable Select whether to link A/D converter start requests (TRG4BN) with TCIV_4 interrupt skipping operation. 0: Does not link with TCIV_4 interrupt skipping 1: Links with TCIV_4 interrupt skipping

Notes: 1. TADCR must not be accessed in eight bits; it should always be accessed in 16 bits.
2. When interrupt skipping is disabled (the T3AEN and T4VEN bits in the timer interrupt skipping set register (TITCR) are cleared to 0 or the skipping count set bits (3ACOR and 4VCOR) in TITCR are cleared to 0), do not link A/D converter start requests with interrupt skipping operation (clear the ITA3AE, ITA4VE, ITB3AE, and ITB4VE bits in the timer A/D converter start request control register (TADCR) to 0).
3. If link with interrupt skipping is enabled while interrupt skipping is disabled, A/D converter start requests will not be issued.
* Do not set to 1 when complementary PWM mode is not selected.

Table 12.27 Setting of Transfer Timing by Bits BF1 and BF0

Bit 7	Bit 6	
BF1	**BF0**	**Description**
0	0	Does not transfer data from the cycle set buffer register to the cycle set register.
0	1	Transfers data from the cycle set buffer register to the cycle set register at the crest of the TCNT_4 count.*[1]
1	0	Transfers data from the cycle set buffer register to the cycle set register at the trough of the TCNT_4 count.*[2]
1	1	Transfers data from the cycle set buffer register to the cycle set register at the crest and trough of the TCNT_4 count.*[2]

Notes: 1. Data is transferred from the cycle set buffer register to the cycle set register when the crest of the TCNT_4 count is reached in complementary PWM mode, when compare match occurs between TCNT_3 and TGRA_3 in reset-synchronized PWM mode, or when compare match occurs between TCNT_4 and TGRA_4 in PWM mode 1 or normal operation mode.
2. These settings are prohibited when complementary PWM mode is not selected.

chanhvinh.com

12.3.9 Timer A/D Converter Start Request Cycle Set Registers (TADCORA_4 and TADCORB_4)

TADCORA_4 and TADCORB_4 are 16-bit readable/writable registers. When the TCNT_4 count reaches the value in TADCORA_4 or TADCORB_4, a corresponding A/D converter start request will be issued.

TADCORA_4 and TADCORB_4 are initialized to H'FFFF.

Bit:	15	14	13	12	11	10	9	8	7	6	5	4	3	2	1	0
Initial value:	1	1	1	1	1	1	1	1	1	1	1	1	1	1	1	1
R/W:	R/W	R/W	R/W	R/W	R/W	R/W	R/W	R/W	R/W	R/W	R/W	R/W	R/W	R/W	R/W	R/W

Note: TADCORA_4 and TADCORB_4 must not be accessed in eight bits; they should always be accessed in 16 bits.

12.3.10 Timer A/D Converter Start Request Cycle Set Buffer Registers (TADCOBRA_4 and TADCOBRB_4)

TADCOBRA_4 and TADCOBRB_4 are 16-bit readable/writable registers. When the crest or trough of the TCNT_4 count is reached, these register values are transferred to TADCORA_4 and TADCORB_4, respectively.

TADCOBRA_4 and TADCOBRB_4 are initialized to H'FFFF.

Bit:	15	14	13	12	11	10	9	8	7	6	5	4	3	2	1	0
Initial value:	1	1	1	1	1	1	1	1	1	1	1	1	1	1	1	1
R/W:	R/W	R/W	R/W	R/W	R/W	R/W	R/W	R/W	R/W	R/W	R/W	R/W	R/W	R/W	R/W	R/W

Note: TADCOBRA_4 and TADCOBRB_4 must not be accessed in eight bits; they should always be accessed in 16 bits.

chanhvinh.com

12.3.11 Timer Counter (TCNT)

The TCNT counters are 16-bit readable/writable counters. This module has five TCNT counters, one each for channels 0 to 4.

The TCNT counters must not be accessed in eight bits; they should always be accessed in 16 bits.

Bit:	15	14	13	12	11	10	9	8	7	6	5	4	3	2	1	0
Initial value:	0	0	0	0	0	0	0	0	0	0	0	0	0	0	0	0
R/W:	R/W	R/W	R/W	R/W	R/W	R/W	R/W	R/W	R/W	R/W	R/W	R/W	R/W	R/W	R/W	R/W

Note: The TCNT counters must not be accessed in eight bits; they should always be accessed in 16 bits.

12.3.12 Timer General Register (TGR)

The TGR registers are 16-bit readable/writable registers. This module has eighteen TGR registers, six for channel 0, two each for channels 1 and 2, four each for channels 3 and 4.

TGRA, TGRB, TGRC, and TGRD function as either output compare or input capture registers. TGRC and TGRD for channels 0, 3, and 4 can also be designated for operation as buffer registers. TGR buffer register combinations are TGRA and TGRC, and TGRB and TGRD.

TGRE_0 and TGRF_0 function as compare registers. When the TCNT_0 count matches the TGRE_0 value, an A/D converter start request can be issued. TGRF can also be designated for operation as a buffer register. TGR buffer register combination is TGRE and TGRF.

Bit:	15	14	13	12	11	10	9	8	7	6	5	4	3	2	1	0
Initial value:	1	1	1	1	1	1	1	1	1	1	1	1	1	1	1	1
R/W:	R/W	R/W	R/W	R/W	R/W	R/W	R/W	R/W	R/W	R/W	R/W	R/W	R/W	R/W	R/W	R/W

Note: The TGR registers must not be accessed in eight bits; they should always be accessed in 16 bits.
TGR registers are initialized to H'FFFF.

chanhvinh.com

12.3.13 Timer Start Register (TSTR)

TSTR is an 8-bit readable/writable register that selects operation/stoppage of TCNT for channels 0 to 4.

When setting the operating mode in TMDR or setting the count clock in TCR, first stop the TCNT counter.

Bit:	7	6	5	4	3	2	1	0
	CST4	CST3	-	-	-	CST2	CST1	CST0
Initial value:	0	0	0	0	0	0	0	0
R/W:	R/W	R/W	R	R	R	R/W	R/W	R/W

Bit	Bit Name	Initial Value	R/W	Description
7	CST4	0	R/W	Counter Start 4 and 3 These bits select operation or stoppage for TCNT. If 0 is written to the CST bit during operation with the TIOC pin designated for output, the counter stops but the TIOC pin output compare output level is retained. If TIOR is written to when the CST bit is cleared to 0, the pin output level will be changed to the set initial output value. 0: TCNT_4 and TCNT_3 count operation is stopped 1: TCNT_4 and TCNT_3 performs count operation
6	CST3	0	R/W	
5 to 3	—	All 0	R	Reserved These bits are always read as 0. The write value should always be 0.
2	CST2	0	R/W	Counter Start 2 to 0 These bits select operation or stoppage for TCNT. If 0 is written to the CST bit during operation with the TIOC pin designated for output, the counter stops but the TIOC pin output compare output level is retained. If TIOR is written to when the CST bit is cleared to 0, the pin output level will be changed to the set initial output value. 0: TCNT_2 to TCNT_0 count operation is stopped 1: TCNT_2 to TCNT_0 performs count operation
1	CST1	0	R/W	
0	CST0	0	R/W	

chanhvinh.com

12.3.14 Timer Synchronous Register (TSYR)

TSYR is an 8-bit readable/writable register that selects independent operation or synchronous operation for the channel 0 to 4 TCNT counters. A channel performs synchronous operation when the corresponding bit in TSYR is set to 1.

Bit:	7	6	5	4	3	2	1	0
	SYNC4	SYNC3	-	-	-	SYNC2	SYNC1	SYNC0
Initial value:	0	0	0	0	0	0	0	0
R/W:	R/W	R/W	R	R	R	R/W	R/W	R/W

Bit	Bit Name	Initial Value	R/W	Description
7	SYNC4	0	R/W	Timer Synchronous operation 4 and 3
6	SYNC3	0	R/W	These bits are used to select whether operation is independent of or synchronized with other channels. When synchronous operation is selected, the TCNT synchronous presetting of multiple channels, and synchronous clearing by counter clearing on another channel, are possible. To set synchronous operation, the SYNC bits for at least two channels must be set to 1. To set synchronous clearing, in addition to the SYNC bit , the TCNT clearing source must also be set by means of bits CCLR0 to CCLR2 in TCR. 0: TCNT_4 and TCNT_3 operate independently (TCNT presetting/clearing is unrelated to other channels) 1: TCNT_4 and TCNT_3 performs synchronous operation TCNT synchronous presetting/synchronous clearing is possible
5 to 3	—	All 0	R	Reserved These bits are always read as 0. The write value should always be 0.

chanhvinh.com

Bit	Bit Name	Initial Value	R/W	Description
2	SYNC2	0	R/W	Timer Synchronous operation 2 to 0 These bits are used to select whether operation is independent of or synchronized with other channels. When synchronous operation is selected, the TCNT synchronous presetting of multiple channels, and synchronous clearing by counter clearing on another channel, are possible. To set synchronous operation, the SYNC bits for at least two channels must be set to 1. To set synchronous clearing, in addition to the SYNC bit, the TCNT clearing source must also be set by means of bits CCLR0 to CCLR2 in TCR. 0: TCNT_2 to TCNT_0 operates independently (TCNT presetting /clearing is unrelated to other channels) 1: TCNT_2 to TCNT_0 performs synchronous operation TCNT synchronous presetting/synchronous clearing is possible
1	SYNC1	0	R/W	
0	SYNC0	0	R/W	

chanhvinh.com

12.3.15 Timer Read/Write Enable Register (TRWER)

TRWER is an 8-bit readable/writable register that enables or disables access to the registers and counters which have write-protection capability against accidental modification in channels 3 and 4.

Bit:	7	6	5	4	3	2	1	0
	-	-	-	-	-	-	-	RWE
Initial value:	0	0	0	0	0	0	0	1
R/W:	R	R	R	R	R	R	R	R/W

Bit	Bit Name	Initial Value	R/W	Description
7 to 1	—	All 0	R	Reserved These bits are always read as 0. The write value should always be 0.
0	RWE	1	R/W	Read/Write Enable Enables or disables access to the registers which have write-protection capability against accidental modification. 0: Disables read/write access to the registers 1: Enables read/write access to the registers [Clearing condition] • When 0 is written to the RWE bit after reading RWE = 1

- Registers and counters having write-protection capability against accidental modification
  22 registers: TCR_3, TCR_4, TMDR_3, TMDR_4, TIORH_3, TIORH_4, TIORL_3, TIORL_4, TIER_3, TIER_4, TGRA_3, TGRA_4, TGRB_3, TGRB_4, TOER, TOCR1, TOCR2, TGCR, TCDR, TDDR, TCNT_3, and TCNT4.

chanhvinh.com

12.3.16 Timer Output Master Enable Register (TOER)

TOER is an 8-bit readable/writable register that enables/disables output settings for output pins TIOC4D, TIOC4C, TIOC3D, TIOC4B, TIOC4A, and TIOC3B. These pins do not output correctly if the TOER bits have not been set. Set TOER of CH3 and CH4 prior to setting TIOR of CH3 and CH4. Set TOER when count operation of TCNT channels 3 and 4 is halted.

Bit:	7	6	5	4	3	2	1	0
	-	-	OE4D	OE4C	OE3D	OE4B	OE4A	OE3B
Initial value:	1	1	0	0	0	0	0	0
R/W:	R	R	R/W	R/W	R/W	R/W	R/W	R/W

Bit	Bit Name	Initial Value	R/W	Description
7, 6	—	All 1	R	Reserved These bits are always read as 1. The write value should always be 1.
5	OE4D	0	R/W	Master Enable TIOC4D This bit enables/disables the TIOC4D pin output for this module. 0: Output for this module is disabled (inactive level)* 1: Output for this module is enabled
4	OE4C	0	R/W	Master Enable TIOC4C This bit enables/disables the TIOC4C pin output for this module. 0: Output for this module is disabled (inactive level)* 1: Output for this module is enabled
3	OE3D	0	R/W	Master Enable TIOC3D This bit enables/disables the TIOC3D pin output for this module. 0: Output for this module is disabled (inactive level)* 1: Output for this module is enabled
2	OE4B	0	R/W	Master Enable TIOC4B This bit enables/disables the TIOC4B pin output for this module. 0: Output for this module is disabled (inactive level)* 1: Output for this module is enabled

chanhvinh.com

Bit	Bit Name	Initial Value	R/W	Description
1	OE4A	0	R/W	Master Enable TIOC4A This bit enables/disables the TIOC4A pin output for this module. 0: Output for this module is disabled (inactive level)* 1: Output for this module is enabled
0	OE3B	0	R/W	Master Enable TIOC3B This bit enables/disables the TIOC3B pin output for this module. 0: Output for this module is disabled (inactive level)* 1: Output for this module is enabled

Note: * The inactive level is determined by the settings in timer output control registers 1 and 2 (TOCR1 and TOCR2). For details, refer to section 12.3.17, Timer Output Control Register 1 (TOCR1), and section 12.3.18, Timer Output Control Register 2 (TOCR2). Set these bits to 1 to enable output for this module in other than complementary PWM or reset-synchronized PWM mode. When these bits are set to 0, low level is output.

chanhvinh.com

12.3.17 Timer Output Control Register 1 (TOCR1)

TOCR1 is an 8-bit readable/writable register that enables/disables PWM synchronized toggle output in complementary PWM mode/reset synchronized PWM mode, and controls output level inversion of PWM output.

Bit:	7	6	5	4	3	2	1	0
	-	PSYE	-	-	TOCL	TOCS	OLSN	OLSP
Initial value:	0	0	0	0	0	0	0	0
R/W:	R	R/W	R	R	R/(W)*3	R/W	R/W	R/W

Bit	Bit Name	Initial value	R/W	Description
7	—	0	R	Reserved This bit is always read as 0. The write value should always be 0.
6	PSYE	0	R/W	PWM Synchronous Output Enable This bit selects the enable/disable of toggle output synchronized with the PWM period. 0: Toggle output is disabled 1: Toggle output is enabled
5, 4	—	All 0	R	Reserved These bits are always read as 0. The write value should always be 0.

chanhvinh.com

Bit	Bit Name	Initial value	R/W	Description
3	TOCL	0	R/(W)*3	TOC Register Write Protection*1 This bit selects the enable/disable of write access to the TOCS, OLSN, and OLSP bits in TOCR1. 0: Write access to the TOCS, OLSN, and OLSP bits is enabled 1: Write access to the TOCS, OLSN, and OLSP bits is disabled
2	TOCS	0	R/W	TOC Select This bit selects either the TOCR1 or TOCR2 setting to be used for the output level in complementary PWM mode and reset-synchronized PWM mode. 0: TOCR1 setting is selected 1: TOCR2 setting is selected
1	OLSN	0	R/W	Output Level Select N*2*4 This bit selects the reverse phase output level in reset-synchronized PWM mode/complementary PWM mode. See table 12.28.
0	OLSP	0	R/W	Output Level Select P*2 This bit selects the positive phase output level in reset-synchronized PWM mode/complementary PWM mode. See table 12.29.

Notes: 1. Setting the TOCL bit to 1 prevents accidental modification when the CPU goes out of control.
2. Clearing the TOCS0 bit to 0 makes this bit setting valid.
3. After power-on reset, 1 can be written only once. After 1 has been written, 0 cannot be written.
4. If there is no dead time, the reverse phase output is the inversion of the forward phase. Set OLSP and OLSN to the same value.

chanhvinh.com

Table 12.28 Output Level Select Function

Bit 1	Function			
			Compare Match Output	
OLSN	Initial Output	Active Level	Up Count	Down Count
0	High level	Low level	High level	Low level
1	Low level	High level	Low level	High level

Note: The reverse phase waveform initial output value changes to active level after elapse of the dead time after count start.

Table 12.29 Output Level Select Function

Bit 0	Function			
			Compare Match Output	
OLSP	Initial Output	Active Level	Up Count	Down Count
0	High level	Low level	Low level	High level
1	Low level	High level	High level	Low level

Figure 12.2 shows an example of complementary PWM mode output (1 phase) when OLSN = 1, OLSP = 1.

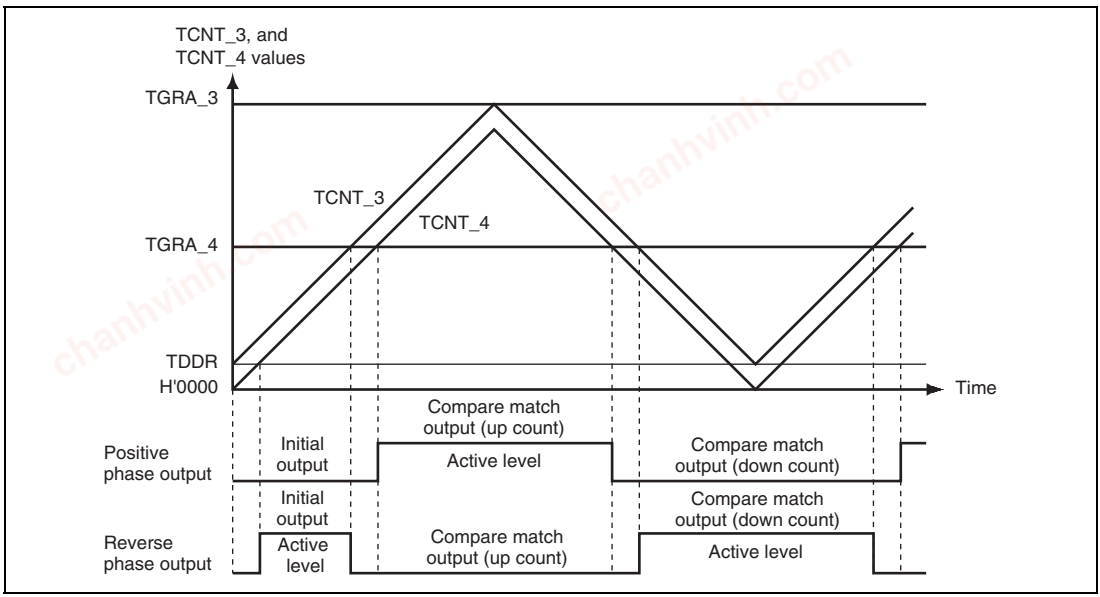

Figure 12.2 Complementary PWM Mode Output Level Example

chanhvinh.com

12.3.18 Timer Output Control Register 2 (TOCR2)

TOCR2 is an 8-bit readable/writable register that controls output level inversion of PWM output in complementary PWM mode and reset-synchronized PWM mode.

Bit:	7	6	5	4	3	2	1	0
	BF[1:0]		OLS3N	OLS3P	OLS2N	OLS2P	OLS1N	OLS1P
Initial value:	0	0	0	0	0	0	0	0
R/W:	R/W	R/W	R/W	R/W	R/W	R/W	R/W	R/W

Bit	Bit Name	Initial value	R/W	Description
7, 6	BF[1:0]	00	R/W	TOLBR Buffer Transfer Timing Select These bits select the timing for transferring data from TOLBR to TOCR2. For details, see table 12.30.
5	OLS3N	0	R/W	Output Level Select 3N* This bit selects the output level on TIOC4D in reset-synchronized PWM mode/complementary PWM mode. See table 12.31.
4	OLS3P	0	R/W	Output Level Select 3P* This bit selects the output level on TIOC4B in reset-synchronized PWM mode/complementary PWM mode. See table 12.32.
3	OLS2N	0	R/W	Output Level Select 2N* This bit selects the output level on TIOC4C in reset-synchronized PWM mode/complementary PWM mode. See table 12.33.
2	OLS2P	0	R/W	Output Level Select 2P* This bit selects the output level on TIOC4A in reset-synchronized PWM mode/complementary PWM mode. See table 12.34.
1	OLS1N	0	R/W	Output Level Select 1N* This bit selects the output level on TIOC3D in reset-synchronized PWM mode/complementary PWM mode. See table 12.35.

chanhvinh.com

Bit	Bit Name	Initial value	R/W	Description
0	OLS1P	0	R/W	Output Level Select 1P* This bit selects the output level on TIOC3B in reset-synchronized PWM mode/complementary PWM mode. See table 12.36.

Note: * Setting the TOCS bit in TOCR1 to 1 makes this bit setting valid. If there is no dead time, the reverse phase output is the inversion of the forward phase. Set OLSiP and OLSiN to the same value (i = 1, 2, or 3).

Table 12.30 Setting of Bits BF1 and BF0

Bit 7	Bit 6	Description	
BF1	**BF0**	**Complementary PWM Mode**	**Reset-Synchronized PWM Mode**
0	0	Does not transfer data from the buffer register (TOLBR) to TOCR2.	Does not transfer data from the buffer register (TOLBR) to TOCR2.
0	1	Transfers data from the buffer register (TOLBR) to TOCR2 at the crest of the TCNT_4 count.	Transfers data from the buffer register (TOLBR) to TOCR2 when TCNT_3/TCNT_4 is cleared
1	0	Transfers data from the buffer register (TOLBR) to TOCR2 at the trough of the TCNT_4 count.	Setting prohibited
1	1	Transfers data from the buffer register (TOLBR) to TOCR2 at the crest and trough of the TCNT_4 count.	Setting prohibited

Table 12.31 TIOC4D Output Level Select Function

Bit 5	Function			
			Compare Match Output	
OLS3N	**Initial Output**	**Active Level**	**Up Count**	**Down Count**
0	High level	Low level	High level	Low level
1	Low level	High level	Low level	High level

Note: The reverse phase waveform initial output value changes to the active level after elapse of the dead time after count start.

chanhvinh.com

Table 12.32 TIOC4B Output Level Select Function

Bit 4	Function			
			Compare Match Output	
OLS3P	Initial Output	Active Level	Up Count	Down Count
0	High level	Low level	Low level	High level
1	Low level	High level	High level	Low level

Table 12.33 TIOC4C Output Level Select Function

Bit 3	Function			
			Compare Match Output	
OLS2N	Initial Output	Active Level	Up Count	Down Count
0	High level	Low level	High level	Low level
1	Low level	High level	Low level	High level

Note: The reverse phase waveform initial output value changes to the active level after elapse of the dead time after count start.

Table 12.34 TIOC4A Output Level Select Function

Bit 2	Function			
			Compare Match Output	
OLS2P	Initial Output	Active Level	Up Count	Down Count
0	High level	Low level	Low level	High level
1	Low level	High level	High level	Low level

Table 12.35 TIOC3D Output Level Select Function

Bit 1	Function			
			Compare Match Output	
OLS1N	Initial Output	Active Level	Up Count	Down Count
0	High level	Low level	High level	Low level
1	Low level	High level	Low level	High level

Note: The reverse phase waveform initial output value changes to the active level after elapse of the dead time after count start.

chanhvinh.com

Table 12.36 TIOC4B Output Level Select Function

Bit 0	Function			
			Compare Match Output	
OLS1P	Initial Output	Active Level	Up Count	Down Count
0	High level	Low level	Low level	High level
1	Low level	High level	High level	Low level

12.3.19 Timer Output Level Buffer Register (TOLBR)

TOLBR is an 8-bit readable/writable register that functions as a buffer for TOCR2 and specifies the PWM output level in complementary PWM mode and reset-synchronized PWM mode.

Bit:	7	6	5	4	3	2	1	0
	-	-	OLS3N	OLS3P	OLS2N	OLS2P	OLS1N	OLS1P
Initial value:	0	0	0	0	0	0	0	0
R/W:	R	R	R/W	R/W	R/W	R/W	R/W	R/W

Bit	Bit Name	Initial value	R/W	Description
7, 6	—	All 0	R	Reserved These bits are always read as 0. The write value should always be 0.
5	OLS3N	0	R/W	Specifies the buffer value to be transferred to the OLS3N bit in TOCR2.
4	OLS3P	0	R/W	Specifies the buffer value to be transferred to the OLS3P bit in TOCR2.
3	OLS2N	0	R/W	Specifies the buffer value to be transferred to the OLS2N bit in TOCR2.
2	OLS2P	0	R/W	Specifies the buffer value to be transferred to the OLS2P bit in TOCR2.
1	OLS1N	0	R/W	Specifies the buffer value to be transferred to the OLS1N bit in TOCR2.
0	OLS1P	0	R/W	Specifies the buffer value to be transferred to the OLS1P bit in TOCR2.

chanhvinh.com

Figure 12.3 shows an example of the PWM output level setting procedure in buffer operation.

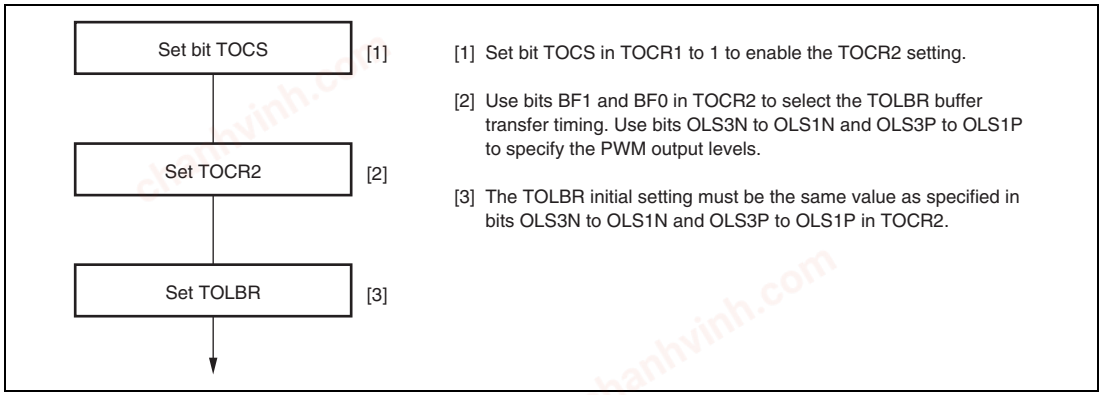

Figure 12.3 PWM Output Level Setting Procedure in Buffer Operation

12.3.20 Timer Gate Control Register (TGCR)

TGCR is an 8-bit readable/writable register that controls the waveform output necessary for brushless DC motor control in reset-synchronized PWM mode/complementary PWM mode. These register settings are ineffective for anything other than complementary PWM mode/reset-synchronized PWM mode.

Bit:	7	6	5	4	3	2	1	0
	-	BDC	N	P	FB	WF	VF	UF
Initial value:	1	0	0	0	0	0	0	0
R/W:	R	R/W	R/W	R/W	R/W	R/W	R/W	R/W

Bit	Bit Name	Initial value	R/W	Description
7	—	1	R	Reserved This bit is always read as 1. The write value should always be 1.
6	BDC	0	R/W	Brushless DC Motor This bit selects whether to make the functions of this register (TGCR) effective or ineffective. 0: Ordinary output 1: Functions of this register are made effective

chanhvinh.com

Bit	Bit Name	Initial value	R/W	Description
5	N	0	R/W	Reverse Phase Output (N) Control This bit selects whether the level output or the reset-synchronized PWM/complementary PWM output while the reverse pins (TIOC3D, TIOC4C, and TIOC4D) are output. 0: Level output 1: Reset synchronized PWM/complementary PWM output
4	P	0	R/W	Positive Phase Output (P) Control This bit selects whether the level output or the reset-synchronized PWM/complementary PWM output while the positive pin (TIOC3B, TIOC4A, and TIOC4B) are output. 0: Level output 1: Reset synchronized PWM/complementary PWM output
3	FB	0	R/W	External Feedback Signal Enable This bit selects whether the switching of the output of the positive/reverse phase is carried out automatically with channel-0 TGRA, TGRB, TGRC input capture signals or by writing 0 or 1 to bits 2 to 0 in TGCR. 0: Output switching is external input (Input sources are channel 0 TGRA, TGRB, TGRC input capture signal) 1: Output switching is carried out by software (setting values of UF, VF, and WF in TGCR).
2	WF	0	R/W	Output Phase Switch 2 to 0 These bits set the positive phase/negative phase output phase on or off state. The setting of these bits is valid only when the FB bit in this register is set to 1. In this case, the setting of bits 2 to 0 is a substitute for external input. See table 12.37.
1	VF	0	R/W	
0	UF	0	R/W	

chanhvinh.com

Table 12.37 Output level Select Function

			Function					
Bit 2	**Bit 1**	**Bit 0**	**TIOC3B**	**TIOC4A**	**TIOC4B**	**TIOC3D**	**TIOC4C**	**TIOC4D**
WF	**VF**	**UF**	**U Phase**	**V Phase**	**W Phase**	**U Phase**	**V Phase**	**W Phase**
0	0	0	OFF	OFF	OFF	OFF	OFF	OFF
		1	ON	OFF	OFF	OFF	OFF	ON
	1	0	OFF	ON	OFF	ON	OFF	OFF
		1	OFF	ON	OFF	OFF	OFF	ON
1	0	0	OFF	OFF	ON	OFF	ON	OFF
		1	ON	OFF	OFF	OFF	ON	OFF
	1	0	OFF	OFF	ON	ON	OFF	OFF
		1	OFF	OFF	OFF	OFF	OFF	OFF

12.3.21 Timer Subcounter (TCNTS)

TCNTS is a 16-bit read-only counter that is used only in complementary PWM mode.

The initial value of TCNTS is H'0000.

Bit:	15	14	13	12	11	10	9	8	7	6	5	4	3	2	1	0
Initial value:	0	0	0	0	0	0	0	0	0	0	0	0	0	0	0	0
R/W:	R	R	R	R	R	R	R	R	R	R	R	R	R	R	R	R

Note: Accessing the TCNTS in 8-bit units is prohibited. Always access in 16-bit units.

chanhvinh.com

12.3.22 Timer Dead Time Data Register (TDDR)

TDDR is a 16-bit register, used only in complementary PWM mode that specifies the TCNT_3 and TCNT_4 counter offset values. In complementary PWM mode, when the TCNT_3 and TCNT_4 counters are cleared and then restarted, the TDDR register value is loaded into the TCNT_3 counter and the count operation starts.

The initial value of TDDR is H'FFFF.

Bit:	15	14	13	12	11	10	9	8	7	6	5	4	3	2	1	0
Initial value:	1	1	1	1	1	1	1	1	1	1	1	1	1	1	1	1
R/W:	R/W	R/W	R/W	R/W	R/W	R/W	R/W	R/W	R/W	R/W	R/W	R/W	R/W	R/W	R/W	R/W

Note: Accessing the TDDR in 8-bit units is prohibited. Always access in 16-bit units.

12.3.23 Timer Cycle Data Register (TCDR)

TCDR is a 16-bit register used only in complementary PWM mode. Set half the PWM carrier sync value as the TCDR register value. This register is constantly compared with the TCNTS counter in complementary PWM mode, and when a match occurs, the TCNTS counter switches direction (decrement to increment).

The initial value of TCDR is H'FFFF.

Bit:	15	14	13	12	11	10	9	8	7	6	5	4	3	2	1	0
Initial value:	1	1	1	1	1	1	1	1	1	1	1	1	1	1	1	1
R/W:	R/W	R/W	R/W	R/W	R/W	R/W	R/W	R/W	R/W	R/W	R/W	R/W	R/W	R/W	R/W	R/W

Note: Accessing the TCDR in 8-bit units is prohibited. Always access in 16-bit units.

chanhvinh.com

12.3.24 Timer Cycle Buffer Register (TCBR)

TCBR is a 16-bit register used only in complementary PWM mode. It functions as a buffer register for the TCDR register. The TCBR register values are transferred to the TCDR register with the transfer timing set in the TMDR register. The initial value of TCBR is H'FFFF.

Bit:	15	14	13	12	11	10	9	8	7	6	5	4	3	2	1	0
Initial value:	1	1	1	1	1	1	1	1	1	1	1	1	1	1	1	1
R/W:	R/W	R/W	R/W	R/W	R/W	R/W	R/W	R/W	R/W	R/W	R/W	R/W	R/W	R/W	R/W	R/W

Note: Accessing the TCBR in 8-bit units is prohibited. Always access in 16-bit units.

12.3.25 Timer Interrupt Skipping Set Register (TITCR)

TITCR is an 8-bit readable/writable register that enables or disables interrupt skipping and specifies the interrupt skipping count. This module has one TITCR.

Bit:	7	6	5	4	3	2	1	0
	T3AEN	3ACOR[2:0]			T4VEN	4VCOR[2:0]		
Initial value:	0	0	0	0	0	0	0	0
R/W:	R/W	R/W	R/W	R/W	R/W	R/W	R/W	R/W

Bit	Bit Name	Initial value	R/W	Description
7	T3AEN	0	R/W	T3AEN Enables or disables TGIA_3 interrupt skipping. 0: TGIA_3 interrupt skipping disabled 1: TGIA_3 interrupt skipping enabled
6 to 4	3ACOR[2:0]	000	R/W	These bits specify the TGIA_3 interrupt skipping count within the range from 0 to 7.* For details, see table 12.38.
3	T4VEN	0	R/W	T4VEN Enables or disables TCIV_4 interrupt skipping. 0: TCIV_4 interrupt skipping disabled 1: TCIV_4 interrupt skipping enabled

chanhvinh.com

Bit	Bit Name	Initial value	R/W	Description
2 to 0	4VCOR[2:0]	000	R/W	These bits specify the TCIV_4 interrupt skipping count within the range from 0 to 7.* For details, see table 12.39.

Note: * When 0 is specified for the interrupt skipping count, no interrupt skipping will be performed. Before changing the interrupt skipping count, be sure to clear the T3AEN and T4VEN bits to 0 to clear the skipping counter (TICNT).

Table 12.38 Setting of Interrupt Skipping Count by Bits 3ACOR2 to 3ACOR0

Bit 6	Bit 5	Bit 4	
3ACOR2	3ACOR1	3ACOR0	Description
0	0	0	Does not skip TGIA_3 interrupts.
0	0	1	Sets the TGIA_3 interrupt skipping count to 1.
0	1	0	Sets the TGIA_3 interrupt skipping count to 2.
0	1	1	Sets the TGIA_3 interrupt skipping count to 3.
1	0	0	Sets the TGIA_3 interrupt skipping count to 4.
1	0	1	Sets the TGIA_3 interrupt skipping count to 5.
1	1	0	Sets the TGIA_3 interrupt skipping count to 6.
1	1	1	Sets the TGIA_3 interrupt skipping count to 7.

Table 12.39 Setting of Interrupt Skipping Count by Bits 4VCOR2 to 4VCOR0

Bit 2	Bit 1	Bit 0	
4VCOR2	4VCOR1	4VCOR0	Description
0	0	0	Does not skip TCIV_4 interrupts.
0	0	1	Sets the TCIV_4 interrupt skipping count to 1.
0	1	0	Sets the TCIV_4 interrupt skipping count to 2.
0	1	1	Sets the TCIV_4 interrupt skipping count to 3.
1	0	0	Sets the TCIV_4 interrupt skipping count to 4.
1	0	1	Sets the TCIV_4 interrupt skipping count to 5.
1	1	0	Sets the TCIV_4 interrupt skipping count to 6.
1	1	1	Sets the TCIV_4 interrupt skipping count to 7.

chanhvinh.com

12.3.26 Timer Interrupt Skipping Counter (TITCNT)

TITCNT is an 8-bit readable/writable counter. This module has one TITCNT. TITCNT retains its value even after stopping the count operation of TCNT_3 and TCNT_4.

Bit:	7	6	5	4	3	2	1	0
	-	3ACNT[2:0]			-	4VCNT[2:0]		
Initial value:	0	0	0	0	0	0	0	0
R/W:	R	R	R	R	R	R	R	R

Bit	Bit Name	Initial Value	R/W	Description
7	—	0	R	Reserved This bit is always read as 0.
6 to 4	3ACNT[2:0]	000	R	TGIA_3 Interrupt Counter While the T3AEN bit in TITCR is set to 1, the count in these bits is incremented every time a TGIA_3 interrupt occurs. [Clearing conditions] • When the 3ACNT2 to 3ACNT0 value in TITCNT matches the 3ACOR2 to 3ACOR0 value in TITCR • When the T3AEN bit in TITCR is cleared to 0 • When the 3ACOR2 to 3ACOR0 bits in TITCR are cleared to 0
3	—	0	R	Reserved This bit is always read as 0.
2 to 0	4VCNT[2:0]	000	R	TCIV_4 Interrupt Counter While the T4VEN bit in TITCR is set to 1, the count in these bits is incremented every time a TCIV_4 interrupt occurs. [Clearing conditions] • When the 4VCNT2 to 4VCNT0 value in TITCNT matches the 4VCOR2 to 4VCOR2 value in TITCR • When the T4VEN bit in TITCR is cleared to 0 • When the 4VCOR2 to 4VCOR2 bits in TITCR are cleared to 0

Note: To clear the TITCNT, clear the bits T3AEN and T4VEN in TITCR to 0.

chanhvinh.com

12.3.27 Timer Buffer Transfer Set Register (TBTER)

TBTER is an 8-bit readable/writable register that enables or disables transfer from the buffer registers* used in complementary PWM mode to the temporary registers and specifies whether to link the transfer with interrupt skipping operation. This module has one TBTER.

Bit:	7	6	5	4	3	2	1	0
	-	-	-	-	-	-	BTE[1:0]	
Initial value:	0	0	0	0	0	0	0	0
R/W:	R	R	R	R	R	R	R/W	R/W

Bit	Bit Name	Initial Value	R/W	Description
7 to 2	—	All 0	R	Reserved These bits are always read as 0. The write value should always be 0.
1, 0	BTE[1:0]	00	R/W	These bits enable or disable transfer from the buffer registers* used in complementary PWM mode to the temporary registers and specify whether to link the transfer with interrupt skipping operation. For details, see table 12.40.

Note: * Applicable buffer registers:
TGRC_3, TGRD_3, TGRC_4, TGRD_4, and TCBR

chanhvinh.com

Table 12.40 Setting of Bits BTE1 and BTE0

Bit 1	Bit 0	
BTE1	**BTE0**	**Description**
0	0	Enables transfer from the buffer registers to the temporary registers*[1] and does not link the transfer with interrupt skipping operation.
0	1	Disables transfer from the buffer registers to the temporary registers.
1	0	Links transfer from the buffer registers to the temporary registers with interrupt skipping operation.*[2]
1	1	Setting prohibited

Notes: 1. Data is transferred according to the MD3 to MD0 bit setting in TMDR. For details, refer to section 12.4.8, Complementary PWM Mode.

2. When interrupt skipping is disabled (the T3AEN and T4VEN bits are cleared to 0 in the timer interrupt skipping set register (TITCR) or the skipping count set bits (3ACOR and 4VCOR) in TITCR are cleared to 0)), be sure to disable link of buffer transfer with interrupt skipping (clear the BTE1 bit in the timer buffer transfer set register (TBTER) to 0). If link with interrupt skipping is enabled while interrupt skipping is disabled, buffer transfer will not be performed.

chanhvinh.com

12.3.28 Timer Dead Time Enable Register (TDER)

TDER is an 8-bit readable/writable register that controls dead time generation in complementary PWM mode. This module has one TDER in channel 3. TDER must be modified only while TCNT stops.

Bit:	7	6	5	4	3	2	1	0
	-	-	-	-	-	-	-	TDER
Initial value:	0	0	0	0	0	0	0	1
R/W:	R	R	R	R	R	R	R	R/(W)

Bit	Bit Name	Initial Value	R/W	Description
7 to 1	—	All 0	R	Reserved These bits are always read as 0. The write value should always be 0.
0	TDER	1	R/(W)	Dead Time Enable Specifies whether to generate dead time. 0: Does not generate dead time 1: Generates dead time* [Clearing condition] • When 0 is written to TDER after reading TDER = 1

Note: * TDDR must be set to 1 or a larger value.

chanhvinh.com

12.3.29 Timer Waveform Control Register (TWCR)

TWCR is an 8-bit readable/writable register that controls the waveform when synchronous counter clearing occurs in TCNT_3 and TCNT_4 in complementary PWM mode and specifies whether to clear the counters at TGRA_3 compare match. The CCE bit and WRE bit in TWCR must be modified only while TCNT stops.

Bit:	7	6	5	4	3	2	1	0
	CCE	-	-	-	-	-	-	WRE
Initial value:	0*	0	0	0	0	0	0	0
R/W:	R/(W)	R	R	R	R	R	R	R/(W)

Note: * Do not set to 1 when complementary PWM mode is not selected.

Bit	Bit Name	Initial Value	R/W	Description
7	CCE	0*	R/(W)	Compare Match Clear Enable Specifies whether to clear counters at TGRA_3 compare match in complementary PWM mode. 0: Does not clear counters at TGRA_3 compare match 1: Clears counters at TGRA_3 compare match [Setting condition] • When 1 is written to CCE after reading CCE = 0
6 to 1	—	All 0	R	Reserved These bits are always read as 0. The write value should always be 0.

chanhvinh.com

Bit	Bit Name	Initial Value	R/W	Description
0	WRE	0	R/(W)	Initial Output Suppression Enable Selects the waveform output when synchronous counter clearing occurs in complementary PWM mode. The initial output is suppressed only when synchronous clearing occurs within the Tb interval at the trough in complementary PWM mode. When synchronous clearing occurs outside this interval, the initial value specified in TOCR is output regardless of the WRE bit setting. The initial value is also output when synchronous clearing occurs in the Tb interval at the trough immediately after TCNT_3 and TCNT_4 start operation. For the Tb interval at the trough in complementary PWM mode, see figure 12.40. 0: Outputs the initial value specified in TOCR 1: Suppresses initial output [Setting condition] • When 1 is written to WRE after reading WRE = 0

Note: * Do not set to 1 when complementary PWM mode is not selected.

12.3.30 Bus Master Interface

The timer counters (TCNT), general registers (TGR), timer subcounter (TCNTS), timer cycle buffer register (TCBR), timer dead time data register (TDDR), timer cycle data register (TCDR), timer A/D converter start request control register (TADCR), timer A/D converter start request cycle set registers (TADCOR), and timer A/D converter start request cycle set buffer registers (TADCOBR) are 16-bit registers. A 16-bit data bus to the bus master enables 16-bit read/writes. 8-bit read/write is not possible. Always access in 16-bit units.

All registers other than the above registers are 8-bit registers. These are connected to the CPU by a 16-bit data bus, so 16-bit read/writes and 8-bit read/writes are both possible.

chanhvinh.com

12.4 Operation

12.4.1 Basic Functions

Each channel has a TCNT and TGR register. TCNT performs up-counting, and is also capable of free-running operation, cycle counting, and external event counting.

Each TGR can be used as an input capture register or output compare register.

Always select functions for external pins of this module using the general I/O ports.

(1) Counter Operation

When one of bits CST0 to CST4 in TSTR is set to 1, the TCNT counter for the corresponding channel begins counting. TCNT can operate as a free-running counter, periodic counter, for example.

(a) Example of Count Operation Setting Procedure

Figure 12.4 shows an example of the count operation setting procedure.

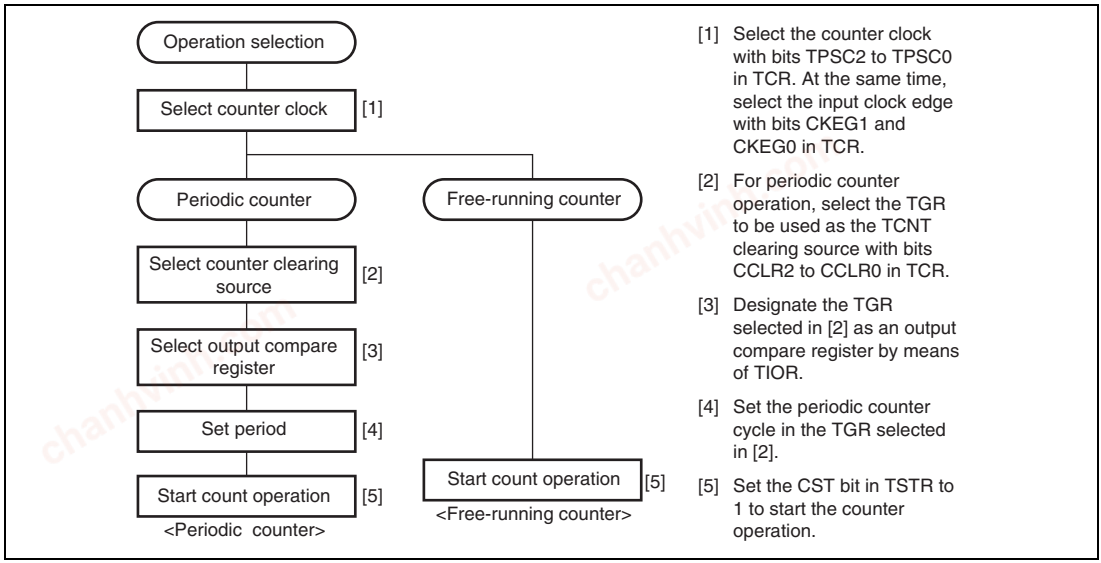

Figure 12.4 Example of Counter Operation Setting Procedure

chanhvinh.com

(b) Free-Running Count Operation and Periodic Count Operation:

Immediately after a reset, the TCNT counters of this module are all designated as free-running counters. When the relevant bit in TSTR is set to 1 the corresponding TCNT counter starts up-count operation as a free-running counter. When TCNT overflows (from H'FFFF to H'0000), the TCFV bit in TSR is set to 1. If the value of the corresponding TCIEV bit in TIER is 1 at this point, this module requests an interrupt. After overflow, TCNT starts counting up again from H'0000.

Figure 12.5 illustrates free-running counter operation.

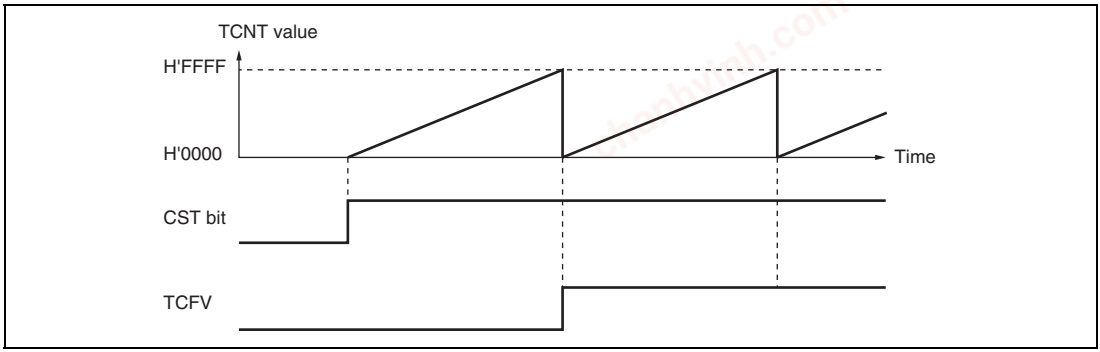

Figure 12.5 Free-Running Counter Operation

When compare match is selected as the TCNT clearing source, the TCNT counter for the relevant channel performs periodic count operation. The TGR register for setting the period is designated as an output compare register, and counter clearing by compare match is selected by means of bits CCLR0 to CCLR2 in TCR. After the settings have been made, TCNT starts up-count operation as a periodic counter when the corresponding bit in TSTR is set to 1. When the count value matches the value in TGR, the TGF bit in TSR is set to 1 and TCNT is cleared to H'0000.

If the value of the corresponding TGIE bit in TIER is 1 at this point, this module requests an interrupt. After a compare match, TCNT starts counting up again from H'0000.

chanhvinh.com

Figure 12.6 illustrates periodic counter operation.

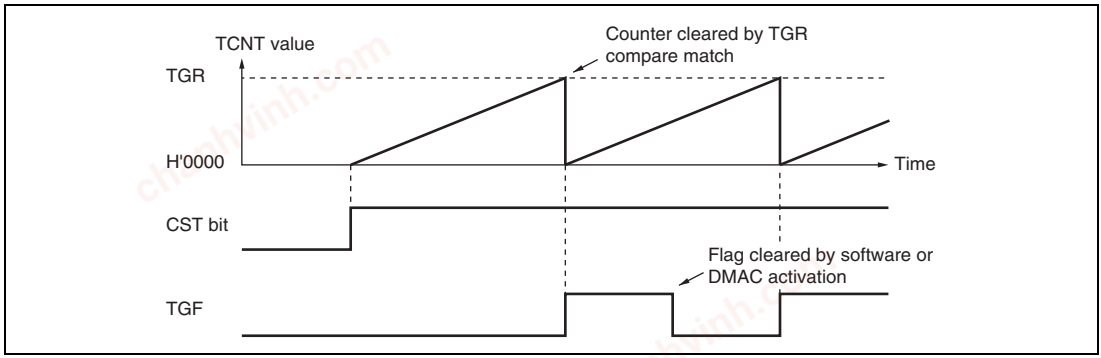

Figure 12.6 Periodic Counter Operation

(2) Waveform Output by Compare Match

This module can perform 0, 1, or toggle output from the corresponding output pin using compare match.

(a) Example of Setting Procedure for Waveform Output by Compare Match

Figure 12.7 shows an example of the setting procedure for waveform output by compare match

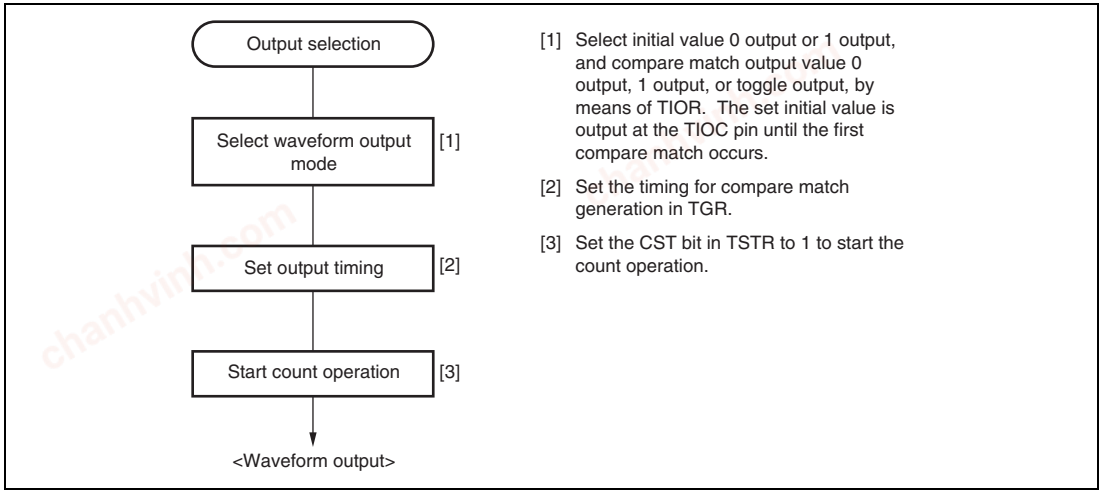

Figure 12.7 Example of Setting Procedure for Waveform Output by Compare Match

chanhvinh.com

(b) Examples of Waveform Output Operation:

Figure 12.8 shows an example of 0 output/1 output.

In this example TCNT has been designated as a free-running counter, and settings have been made such that 1 is output by compare match A, and 0 is output by compare match B. When the set level and the pin level coincide, the pin level does not change.

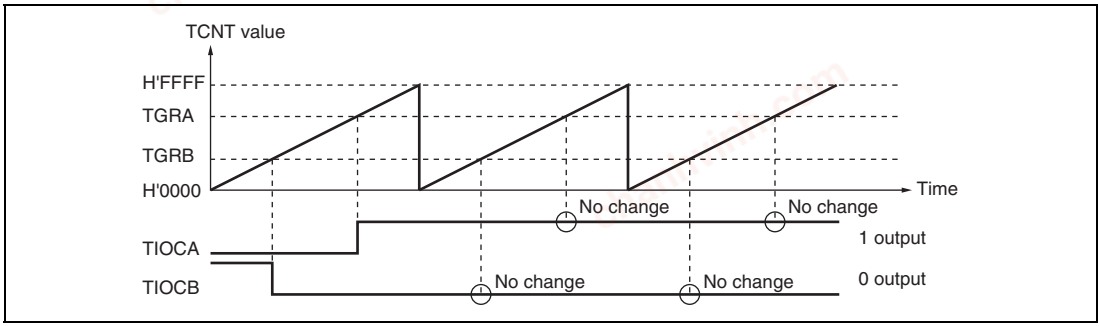

Figure 12.8 Example of 0 Output/1 Output Operation

Figure 12.9 shows an example of toggle output.

In this example, TCNT has been designated as a periodic counter (with counter clearing on compare match B), and settings have been made such that the output is toggled by both compare match A and compare match B.

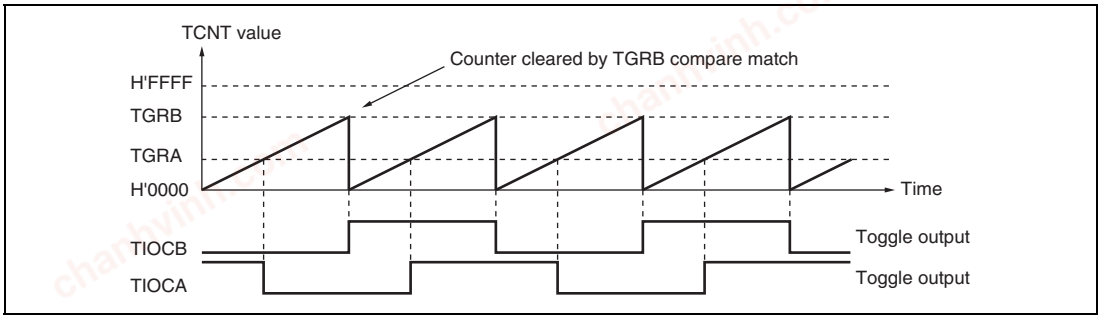

Figure 12.9 Example of Toggle Output Operation

chanhvinh.com

(3) Input Capture Function

The TCNT value can be transferred to TGR on detection of the TIOC pin input edge.

Rising edge, falling edge, or both edges can be selected as the detected edge. For channels 0 and 1, it is also possible to specify another channel's counter input clock or compare match signal as the input capture source.

Note: When another channel's counter input clock is used as the input capture input for channels 0 and 1, Pϕ/1 should not be selected as the counter input clock used for input capture input. Input capture will not be generated if Pϕ/1 is selected.

(a) Example of Input Capture Operation Setting Procedure

Figure 12.10 shows an example of the input capture operation setting procedure.

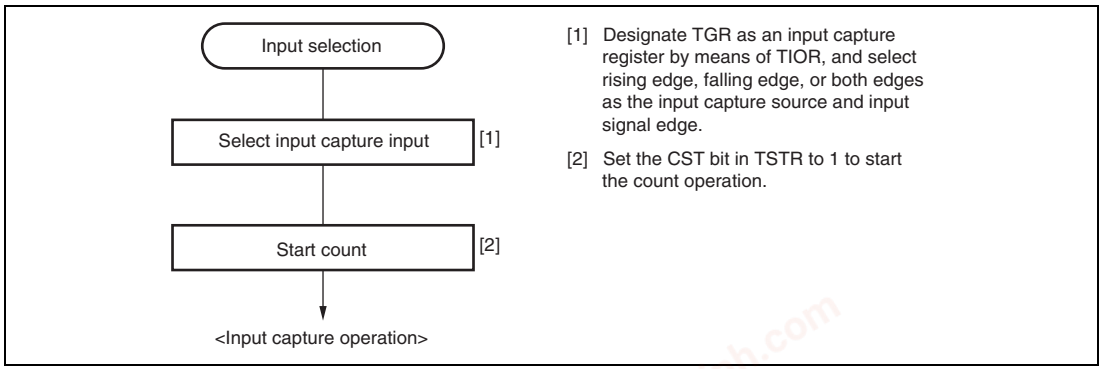

Figure 12.10 Example of Input Capture Operation Setting Procedure

chanhvinh.com

(b) Example of Input Capture Operation

Figure 12.11 shows an example of input capture operation.

In this example both rising and falling edges have been selected as the TIOCA pin input capture input edge, the falling edge has been selected as the TIOCB pin input capture input edge, and counter clearing by TGRB input capture has been designated for TCNT.

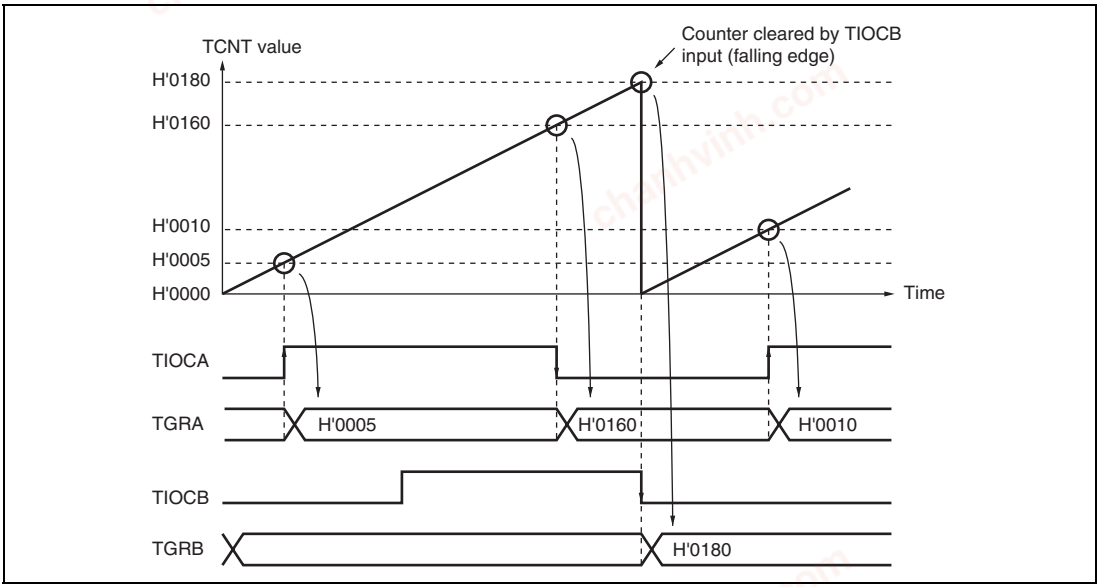

Figure 12.11 Example of Input Capture Operation

chanhvinh.com

12.4.2 Synchronous Operation

In synchronous operation, the values in a number of TCNT counters can be rewritten simultaneously (synchronous presetting). Also, a number of TCNT counters can be cleared simultaneously by making the appropriate setting in TCR (synchronous clearing).

Synchronous operation enables TGR to be incremented with respect to a single time base.

Channels 0 to 4 can all be designated for synchronous operation.

(1) Example of Synchronous Operation Setting Procedure

Figure 12.12 shows an example of the synchronous operation setting procedure.

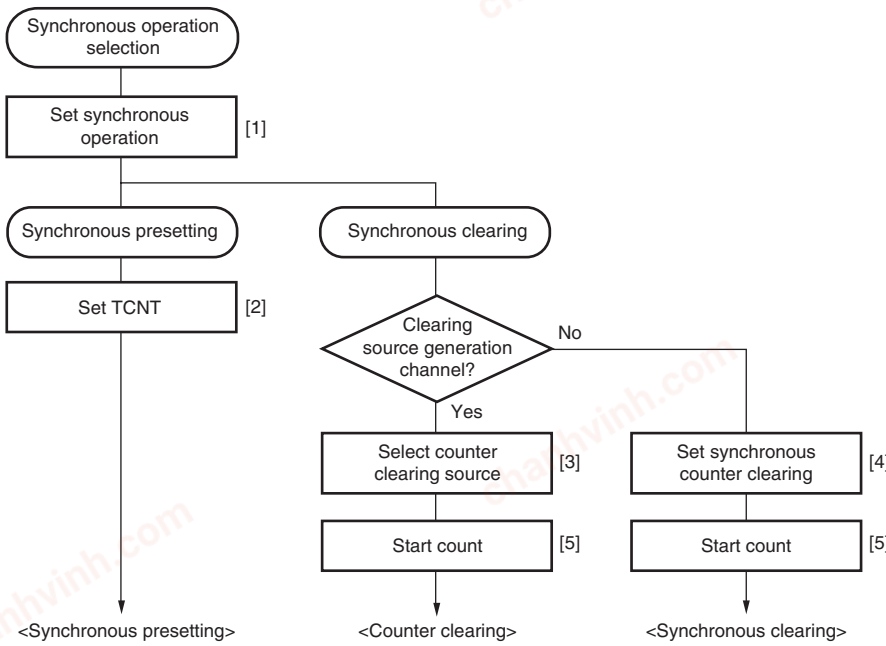

[1] Set to 1 the SYNC bits in TSYR corresponding to the channels to be designated for synchronous operation.
[2] When the TCNT counter of any of the channels designated for synchronous operation is written to, the same value is simultaneously written to the other TCNT counters.
[3] Use bits CCLR2 to CCLR0 in TCR to specify TCNT clearing by input capture/output compare, etc.
[4] Use bits CCLR2 to CCLR0 in TCR to designate synchronous clearing for the counter clearing source.
[5] Set to 1 the CST bits in TSTR for the relevant channels, to start the count operation.

Figure 12.12 Example of Synchronous Operation Setting Procedure

chanhvinh.com

(2) Example of Synchronous Operation

Figure 12.13 shows an example of synchronous operation.

In this example, synchronous operation and PWM mode 1 have been designated for channels 0 to 2, TGRB_0 compare match has been set as the channel 0 counter clearing source, and synchronous clearing has been set for the channel 1 and 2 counter clearing source.

Three-phase PWM waveforms are output from pins TIOC0A, TIOC1A, and TIOC2A. At this time, synchronous presetting, and synchronous clearing by TGRB_0 compare match, are performed for channel 0 to 2 TCNT counters, and the data set in TGRB_0 is used as the PWM cycle.

For details of PWM modes, see section 12.4.5, PWM Modes.

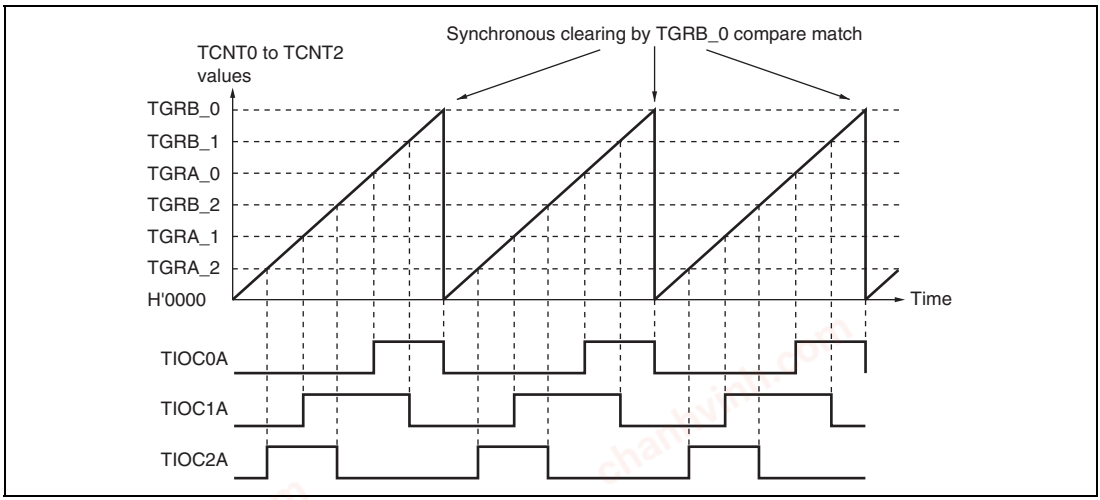

Figure 12.13 Example of Synchronous Operation

chanhvinh.com

12.4.3 Buffer Operation

Buffer operation, provided for channels 0, 3, and 4, enables TGRC and TGRD to be used as buffer registers. In channel 0, TGRF can also be used as a buffer register.

Buffer operation differs depending on whether TGR has been designated as an input capture register or as a compare match register.

Note: TGRE_0 cannot be designated as an input capture register and can only operate as a compare match register.

Table 12.41 shows the register combinations used in buffer operation.

Table 12.41 Register Combinations in Buffer Operation

Channel	Timer General Register	Buffer Register
0	TGRA_0	TGRC_0
	TGRB_0	TGRD_0
	TGRE_0	TGRF_0
3	TGRA_3	TGRC_3
	TGRB_3	TGRD_3
4	TGRA_4	TGRC_4
	TGRB_4	TGRD_4

- When TGR is an output compare register

  When a compare match occurs, the value in the buffer register for the corresponding channel is transferred to the timer general register.

  This operation is illustrated in figure 12.14.

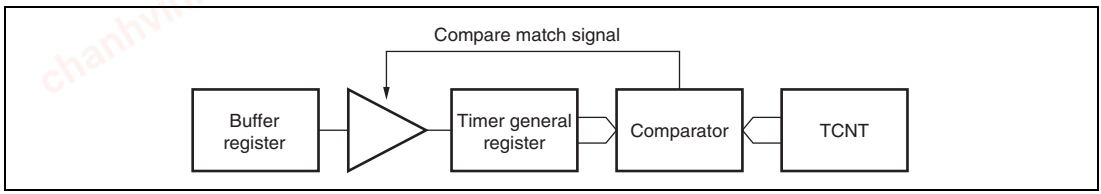

Figure 12.14 Compare Match Buffer Operation

chanhvinh.com

- When TGR is an input capture register

  When input capture occurs, the value in TCNT is transferred to TGR and the value previously held in the timer general register is transferred to the buffer register.

  This operation is illustrated in figure 12.15.

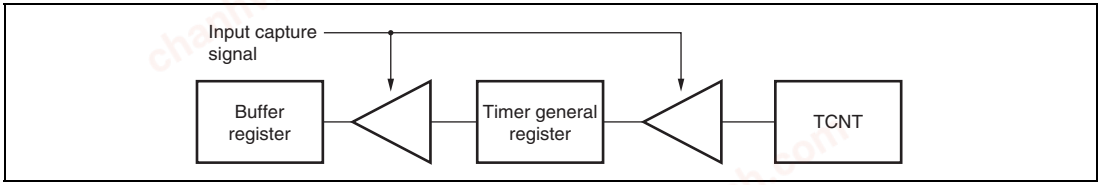

Figure 12.15 Input Capture Buffer Operation

(1) Example of Buffer Operation Setting Procedure

Figure 12.16 shows an example of the buffer operation setting procedure.

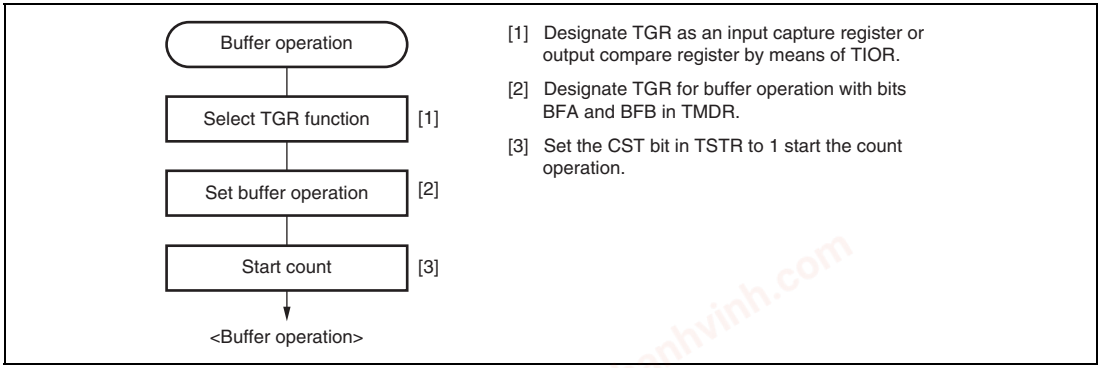

Figure 12.16 Example of Buffer Operation Setting Procedure

chanhvinh.com

(2) Examples of Buffer Operation

(a) When TGR is an output compare register

Figure 12.17 shows an operation example in which PWM mode 1 has been designated for channel 0, and buffer operation has been designated for TGRA and TGRC. The settings used in this example are TCNT clearing by compare match B, 1 output at compare match A, and 0 output at compare match B. In this example, the TTSA bit in TBTM is cleared to 0.

As buffer operation has been set, when compare match A occurs the output changes and the value in buffer register TGRC is simultaneously transferred to timer general register TGRA. This operation is repeated each time that compare match A occurs.

For details of PWM modes, see section 12.4.5, PWM Modes.

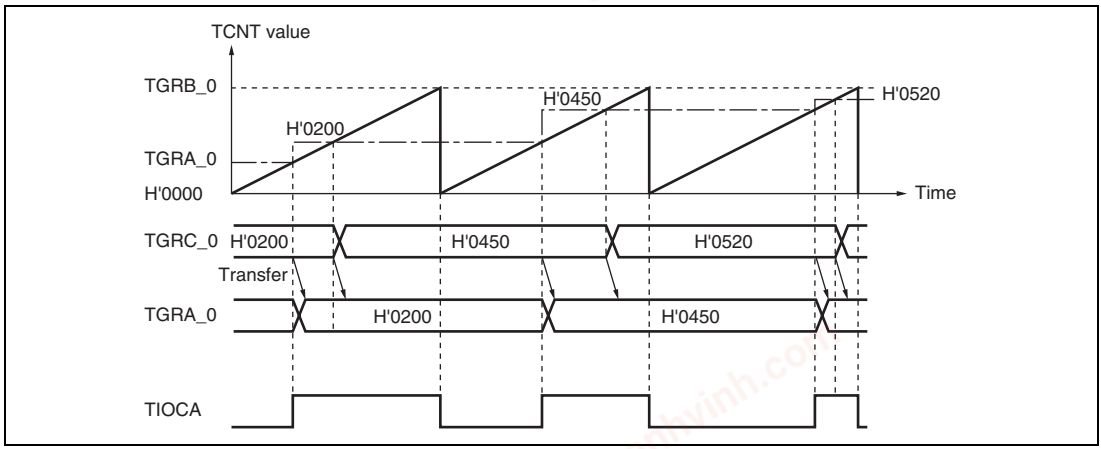

Figure 12.17 Example of Buffer Operation (1)

(b) When TGR is an input capture register

Figure 12.18 shows an operation example in which TGRA has been designated as an input capture register, and buffer operation has been designated for TGRA and TGRC.

Counter clearing by TGRA input capture has been set for TCNT, and both rising and falling edges have been selected as the TIOCA pin input capture input edge.

As buffer operation has been set, when the TCNT value is stored in TGRA upon the occurrence of input capture A, the value previously stored in TGRA is simultaneously transferred to TGRC.

chanhvinh.com

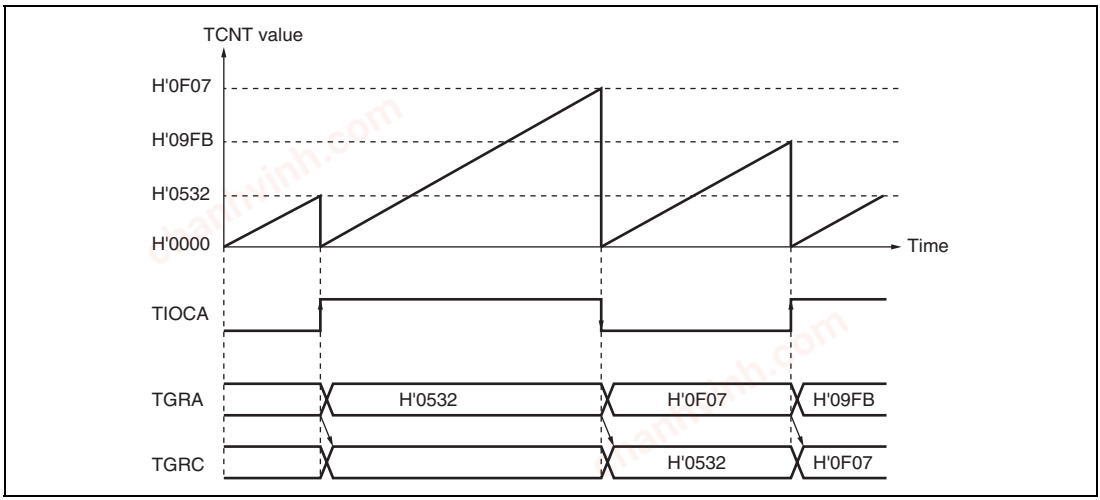

Figure 12.18 Example of Buffer Operation (2)

(3) Selecting Timing for Transfer from Buffer Registers to Timer General Registers in Buffer Operation

The timing for transfer from buffer registers to timer general registers can be selected in PWM mode 1 or 2 for channel 0 or in PWM mode 1 for channels 3 and 4 by setting the buffer operation transfer mode registers (TBTM_0, TBTM_3, and TBTM_4). Either compare match (initial setting) or TCNT clearing can be selected for the transfer timing. TCNT clearing as transfer timing is one of the following cases.

- When TCNT overflows (H'FFFF to H'0000)
- When H'0000 is written to TCNT during counting
- When TCNT is cleared to H'0000 under the condition specified in the CCLR2 to CCLR0 bits in TCR

Note: TBTM must be modified only while TCNT stops.

Figure 12.19 shows an operation example in which PWM mode 1 is designated for channel 0 and buffer operation is designated for TGRA_0 and TGRC_0. The settings used in this example are TCNT_0 clearing by compare match B, 1 output at compare match A, and 0 output at compare match B. The TTSA bit in TBTM_0 is set to 1.

chanhvinh.com

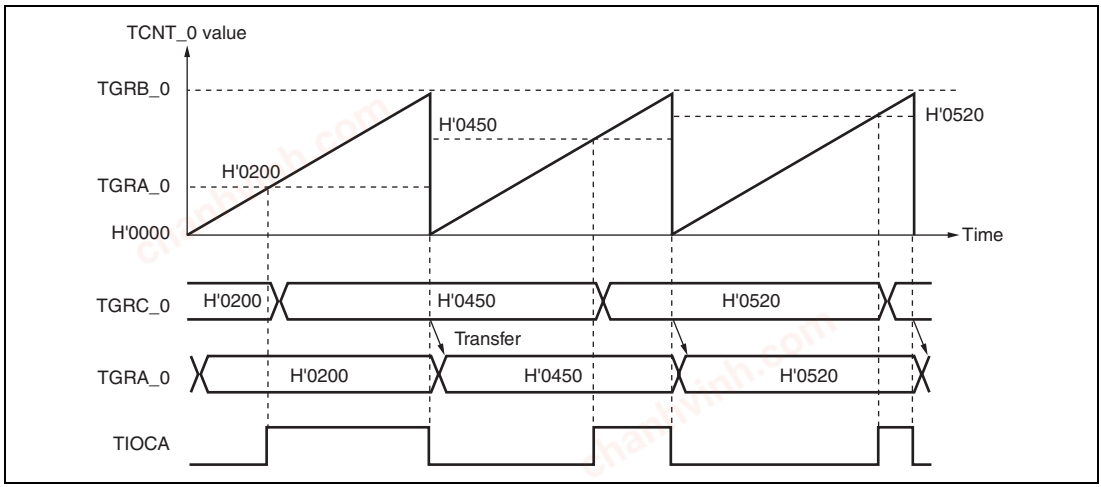

Figure 12.19 Example of Buffer Operation When TCNT_0 Clearing is Selected for TGRC_0 to TGRA_0 Transfer Timing

12.4.4 Cascaded Operation

In cascaded operation, two 16-bit counters for different channels are used together as a 32-bit counter.

This function works by counting the channel 1 counter clock upon overflow/underflow of TCNT_2 as set in bits TPSC0 to TPSC2 in TCR.

Underflow occurs only when the lower 16-bit TCNT is in phase-counting mode.

Table 12.42 shows the register combinations used in cascaded operation.

Note: When phase counting mode is set for channel 1, the counter clock setting is invalid and the counters operates independently in phase counting mode.

Table 12.42 Cascaded Combinations

Combination	Upper 16 Bits	Lower 16 Bits
Channels 1 and 2	TCNT_1	TCNT_2

For simultaneous input capture of TCNT_1 and TCNT_2 during cascaded operation, additional input capture input pins can be specified by the input capture control register (TICCR). The edge detection that is the condition for input capture uses a signal representing the logical OR of the original input pin and the added input pins. For details, see (4) Cascaded Operation Example (c).

chanhvinh.com

For input capture in cascade connection, refer to section 12.7.22, Simultaneous Capture of TCNT_1 and TCNT_2 in Cascade Connection.

Table 12.43 shows the TICCR setting and input capture input pins.

Table 12.43 TICCR Setting and Input Capture Input Pins

Target Input Capture	TICCR Setting	Input Capture Input Pins
Input capture from TCNT_1 to TGRA_1	I2AE bit = 0 (initial value)	TIOC1A
	I2AE bit = 1	TIOC1A, TIOC2A
Input capture from TCNT_1 to TGRB_1	I2BE bit = 0 (initial value)	TIOC1B
	I2BE bit = 1	TIOC1B, TIOC2B
Input capture from TCNT_2 to TGRA_2	I1AE bit = 0 (initial value)	TIOC2A
	I1AE bit = 1	TIOC2A, TIOC1A
Input capture from TCNT_2 to TGRB_2	I1BE bit = 0 (initial value)	TIOC2B
	I1BE bit = 1	TIOC2B, TIOC1B

(1) Example of Cascaded Operation Setting Procedure

Figure 12.20 shows an example of the setting procedure for cascaded operation.

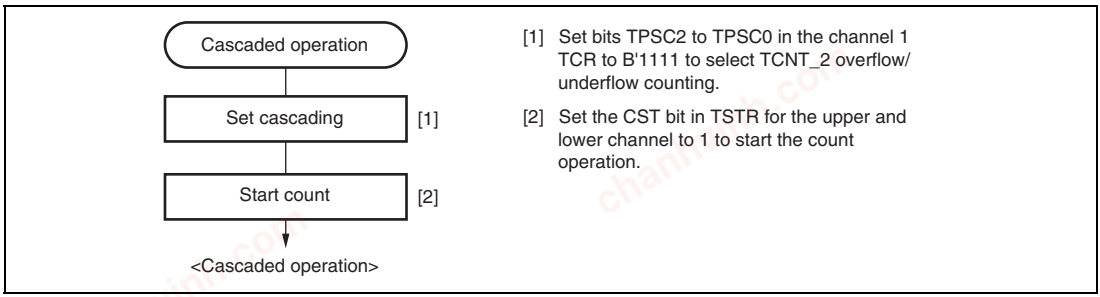

Figure 12.20 Cascaded Operation Setting Procedure

(2) Cascaded Operation Example (a)

Figure 12.21 illustrates the operation when TCNT_2 overflow/underflow counting has been set for TCNT_1 and phase counting mode has been designated for channel 2.

TCNT_1 is incremented by TCNT_2 overflow and decremented by TCNT_2 underflow.

chanhvinh.com

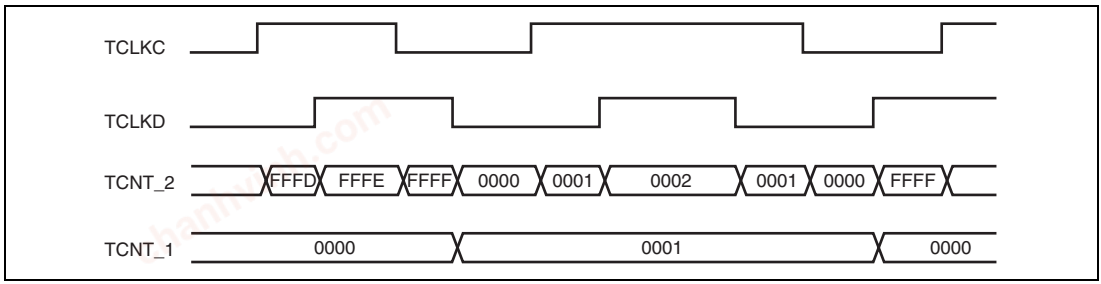

Figure 12.21 Cascaded Operation Example (a)

(3) Cascaded Operation Example (b)

Figure 12.22 illustrates the operation when TCNT_1 and TCNT_2 have been cascaded and the I2AE bit in TICCR has been set to 1 to include the TIOC2A pin in the TGRA_1 input capture conditions. In this example, the IOA0 to IOA3 bits in TIOR_1 have selected the TIOC1A rising edge for the input capture timing while the IOA0 to IOA3 bits in TIOR_2 have selected the TIOC2A rising edge for the input capture timing.

Under these conditions, the rising edge of both TIOC1A and TIOC2A is used for the TGRA_1 input capture condition. For the TGRA_2 input capture condition, the TIOC2A rising edge is used.

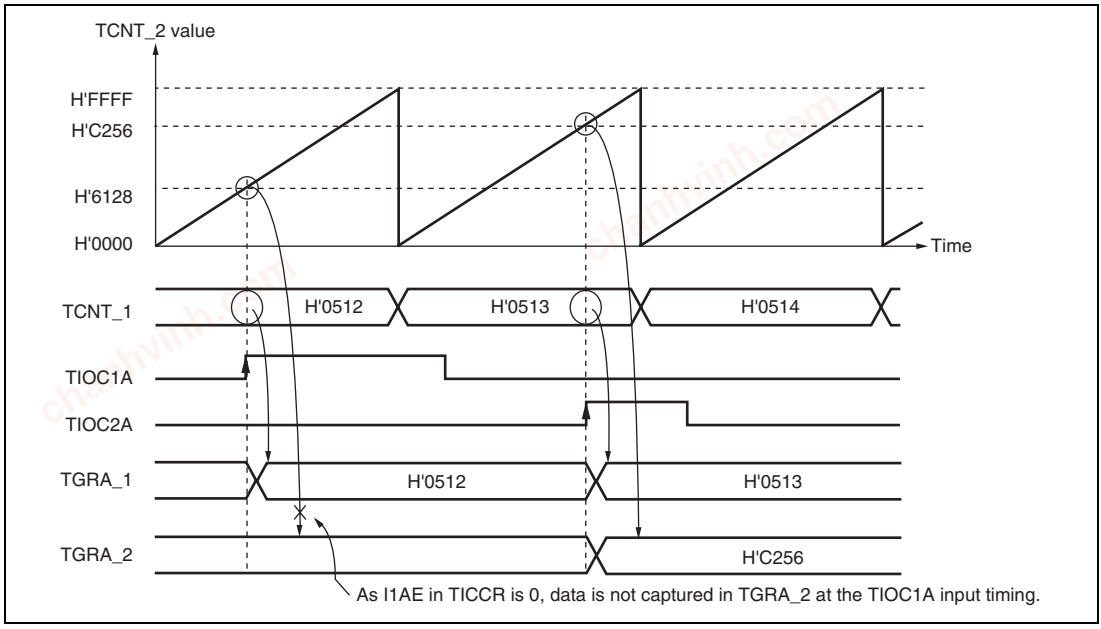

Figure 12.22 Cascaded Operation Example (b)

chanhvinh.com

(4) Cascaded Operation Example (c)

Figure 12.23 illustrates the operation when TCNT_1 and TCNT_2 have been cascaded and the I2AE and I1AE bits in TICCR have been set to 1 to include the TIOC2A and TIOC1A pins in the TGRA_1 and TGRA_2 input capture conditions, respectively. In this example, the IOA0 to IOA3 bits in both TIOR_1 and TIOR_2 have selected both the rising and falling edges for the input capture timing. Under these conditions, the ORed result of TIOC1A and TIOC2A input is used for the TGRA_1 and TGRA_2 input capture conditions.

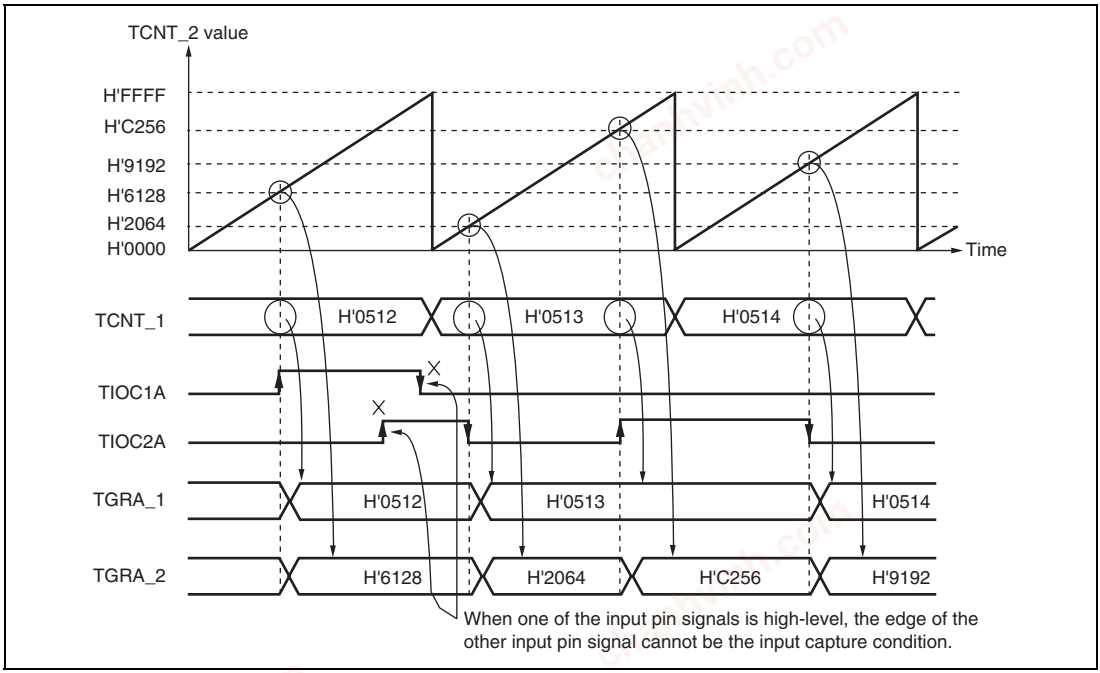

Figure 12.23 Cascaded Operation Example (c)

chanhvinh.com

(5) Cascaded Operation Example (d)

Figure 12.24 illustrates the operation when TCNT_1 and TCNT_2 have been cascaded and the I2AE bit in TICCR has been set to 1 to include the TIOC2A pin in the TGRA_1 input capture conditions. In this example, the IOA0 to IOA3 bits in TIOR_1 have selected TGRA_0 compare match or input capture occurrence for the input capture timing while the IOA0 to IOA3 bits in TIOR_2 have selected the TIOC2A rising edge for the input capture timing.

Under these conditions, as TIOR_1 has selected TGRA_0 compare match or input capture occurrence for the input capture timing, the TIOC2A edge is not used for TGRA_1 input capture condition although the I2AE bit in TICCR has been set to 1.

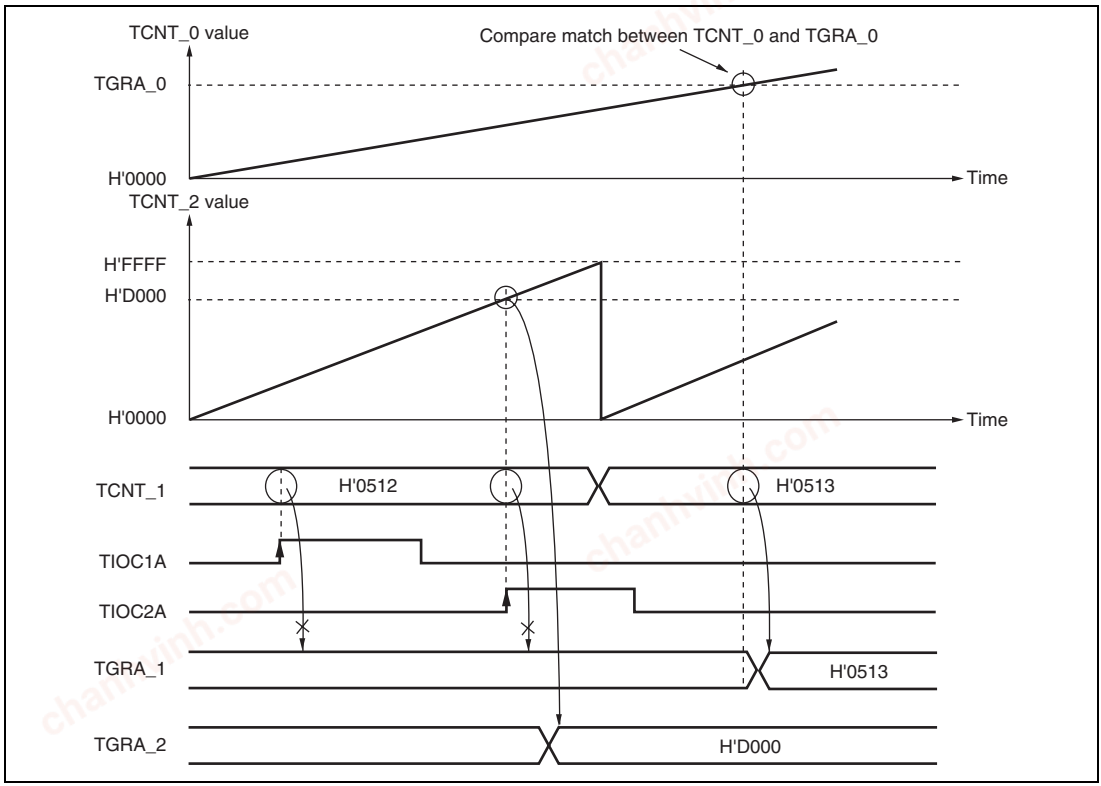

Figure 12.24 Cascaded Operation Example (d)

chanhvinh.com

12.4.5 PWM Modes

In PWM mode, PWM waveforms are output from the output pins. The output level can be selected as 0, 1, or toggle output in response to a compare match of each TGR.

TGR registers settings can be used to output a PWM waveform in the range of 0% to 100% duty.

Designating TGR compare match as the counter clearing source enables the period to be set in that register. All channels can be designated for PWM mode independently. Synchronous operation is also possible.

There are two PWM modes, as described below.

- PWM mode 1

  PWM output is generated from the TIOCA and TIOCC pins by pairing TGRA with TGRB and TGRC with TGRD. The output specified by bits IOA0 to IOA3 and IOC0 to IOC3 in TIOR is output from the TIOCA and TIOCC pins at compare matches A and C, and the output specified by bits IOB0 to IOB3 and IOD0 to IOD3 in TIOR is output at compare matches B and D. The initial output value is the value set in TGRA or TGRC. If the set values of paired TGRs are identical, the output value does not change when a compare match occurs.

  In PWM mode 1, a maximum 8-phase PWM output is possible.

- PWM mode 2

  PWM output is generated using one TGR as the cycle register and the others as duty registers. The output specified in TIOR is performed by means of compare matches. Upon counter clearing by a cycle register compare match, the output value of each pin is the initial value set in TIOR. If the set values of the cycle and duty registers are identical, the output value does not change when a compare match occurs.

  In PWM mode 2, a maximum 8-phase PWM output is possible in combination use with synchronous operation.

The correspondence between PWM output pins and registers is shown in table 12.44.

chanhvinh.com

Table 12.44 PWM Output Registers and Output Pins

		Output Pins	
Channel	**Registers**	**PWM Mode 1**	**PWM Mode 2**
0	TGRA_0	TIOC0A	TIOC0A
	TGRB_0		TIOC0B
	TGRC_0	TIOC0C	TIOC0C
	TGRD_0		TIOC0D
1	TGRA_1	TIOC1A	TIOC1A
	TGRB_1		TIOC1B
2	TGRA_2	TIOC2A	TIOC2A
	TGRB_2		TIOC2B
3	TGRA_3	TIOC3A	Cannot be set
	TGRB_3		Cannot be set
	TGRC_3	TIOC3C	Cannot be set
	TGRD_3		Cannot be set
4	TGRA_4	TIOC4A	Cannot be set
	TGRB_4		Cannot be set
	TGRC_4	TIOC4C	Cannot be set
	TGRD_4		Cannot be set

Note: In PWM mode 2, PWM output is not possible for the TGR register in which the period is set.

chanhvinh.com

(1) Example of PWM Mode Setting Procedure

Figure 12.25 shows an example of the PWM mode setting procedure.

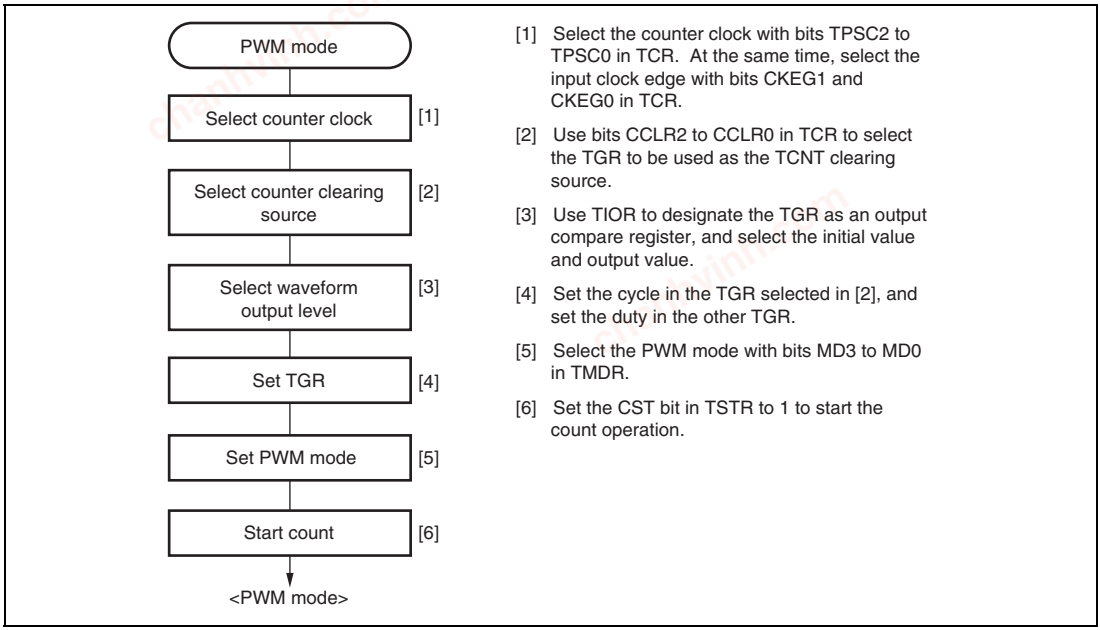

Figure 12.25 Example of PWM Mode Setting Procedure

(2) Examples of PWM Mode Operation

Figure 12.26 shows an example of PWM mode 1 operation.

In this example, TGRA compare match is set as the TCNT clearing source, 0 is set for the TGRA initial output value and output value, and 1 is set as the TGRB output value.

In this case, the value set in TGRA is used as the period, and the values set in the TGRB registers are used as the duty levels.

chanhvinh.com

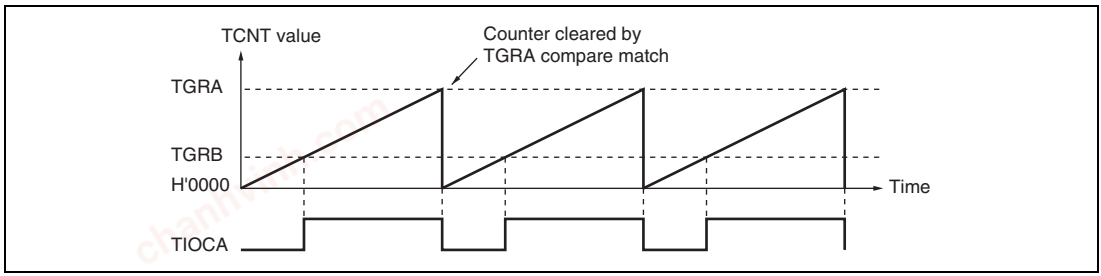

Figure 12.26 Example of PWM Mode Operation (1)

Figure 12.27 shows an example of PWM mode 2 operation.

In this example, synchronous operation is designated for channels 0 and 1, TGRB_1 compare match is set as the TCNT clearing source, and 0 is set for the initial output value and 1 for the output value of the other TGR registers (TGRA_0 to TGRD_0, TGRA_1), outputting a 5-phase PWM waveform.

In this case, the value set in TGRB_1 is used as the cycle, and the values set in the other TGRs are used as the duty levels.

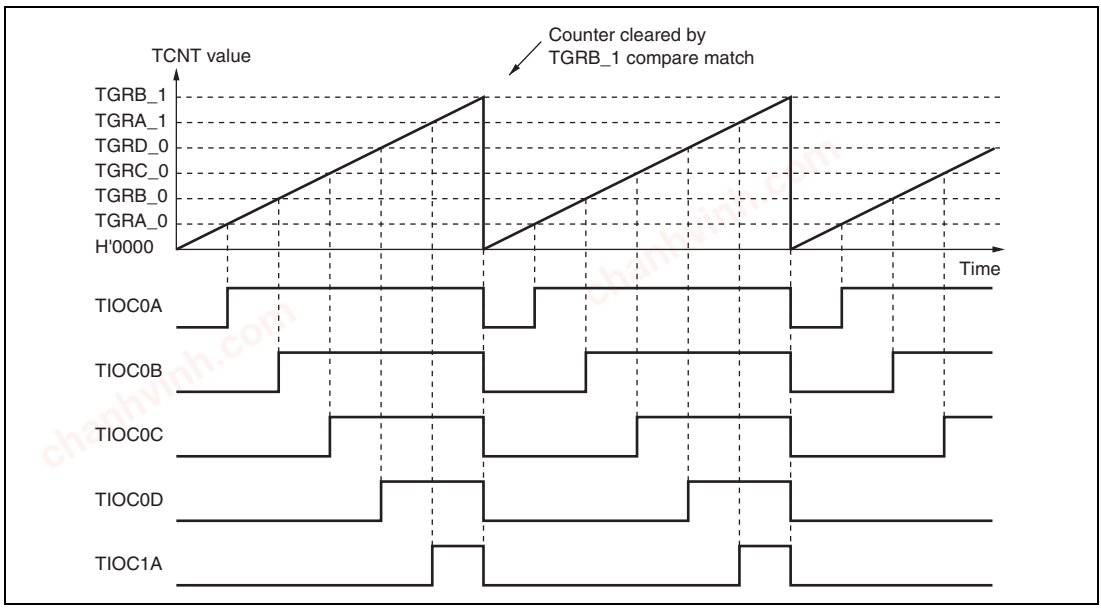

Figure 12.27 Example of PWM Mode Operation (2)

chanhvinh.com

Figure 12.28 shows examples of PWM waveform output with 0% duty and 100% duty in PWM mode.

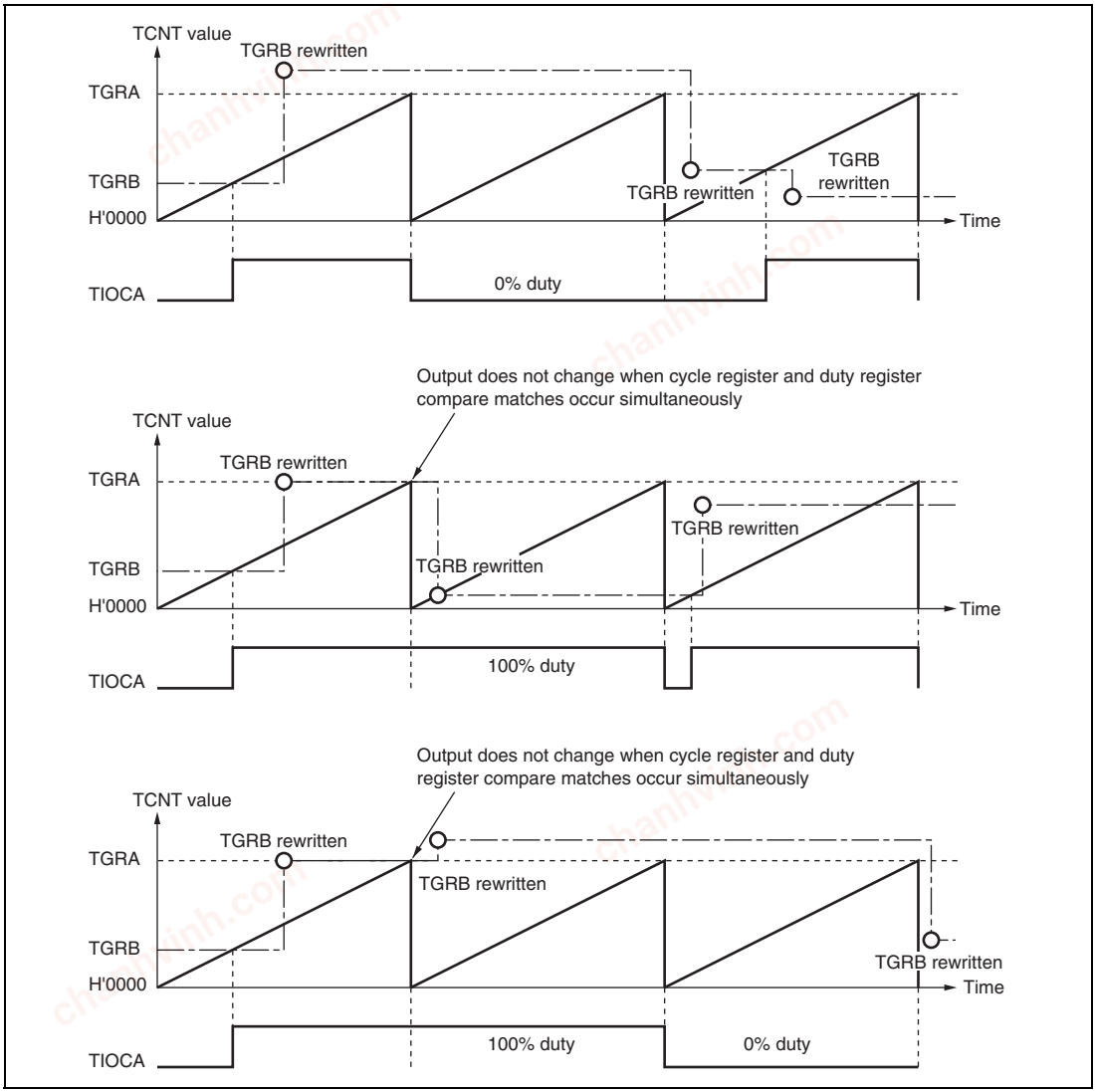

Figure 12.28 Example of PWM Mode Operation (3)

chanhvinh.com

12.4.6 Phase Counting Mode

In phase counting mode, the phase difference between two external clock inputs is detected and TCNT is incremented/decremented accordingly. This mode can be set for channels 1 and 2.

When phase counting mode is set, an external clock is selected as the counter input clock and TCNT operates as an up/down-counter regardless of the setting of bits TPSC0 to TPSC2 and bits CKEG0 and CKEG1 in TCR. However, the functions of bits CCLR0 and CCLR1 in TCR, and of TIOR, TIER, and TGR, are valid, and input capture/compare match and interrupt functions can be used.

This can be used for two-phase encoder pulse input.

If overflow occurs when TCNT is counting up, the TCFV flag in TSR is set; if underflow occurs when TCNT is counting down, the TCFU flag is set.

The TCFD bit in TSR is the count direction flag. Reading the TCFD flag reveals whether TCNT is counting up or down.

Table 12.45 shows the correspondence between external clock pins and channels.

Table 12.45 Phase Counting Mode Clock Input Pins

	External Clock Pins	
Channels	**A-Phase**	**B-Phase**
When channel 1 is set to phase counting mode	TCLKA	TCLKB
When channel 2 is set to phase counting mode	TCLKC	TCLKD

(1) Example of Phase Counting Mode Setting Procedure

Figure 12.29 shows an example of the phase counting mode setting procedure.

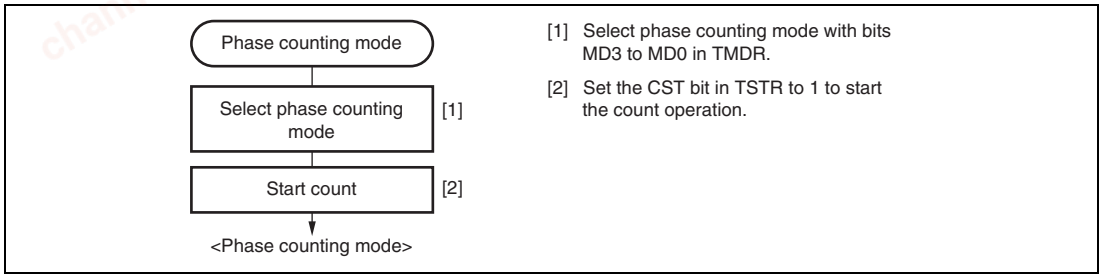

Figure 12.29 Example of Phase Counting Mode Setting Procedure

chanhvinh.com

(2) Examples of Phase Counting Mode Operation

In phase counting mode, TCNT counts up or down according to the phase difference between two external clocks. There are four modes, according to the count conditions.

(a) Phase counting mode 1

Figure 12.30 shows an example of phase counting mode 1 operation, and table 12.46 summarizes the TCNT up/down-count conditions.

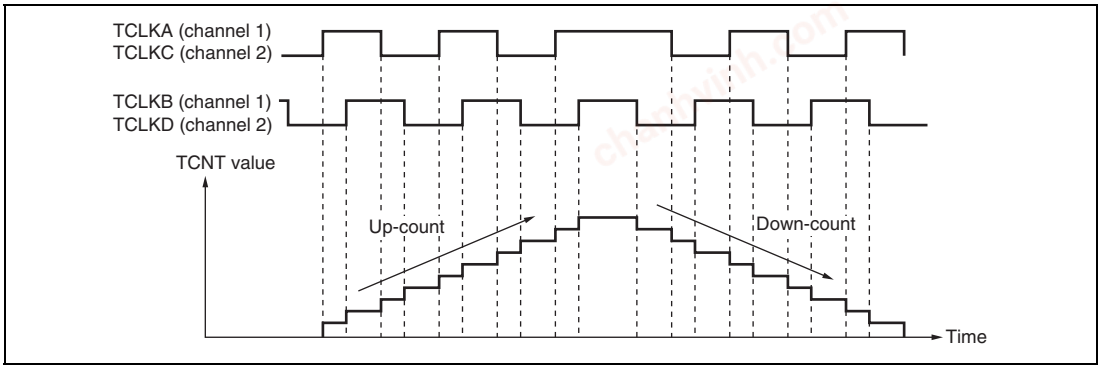

Figure 12.30 Example of Phase Counting Mode 1 Operation

Table 12.46 Up/Down-Count Conditions in Phase Counting Mode 1

TCLKA (Channel 1) TCLKC (Channel 2)	TCLKB (Channel 1) TCLKD (Channel 2)	Operation
High level	↑	Up-count
Low level	↓	
↑	Low level	
↓	High level	
High level	↓	Down-count
Low level	↑	
↑	High level	
↓	Low level	

[Legend]
↑: Rising edge
↓: Falling edge

chanhvinh.com

(b) Phase counting mode 2

Figure 12.31 shows an example of phase counting mode 2 operation, and table 12.47 summarizes the TCNT up/down-count conditions.

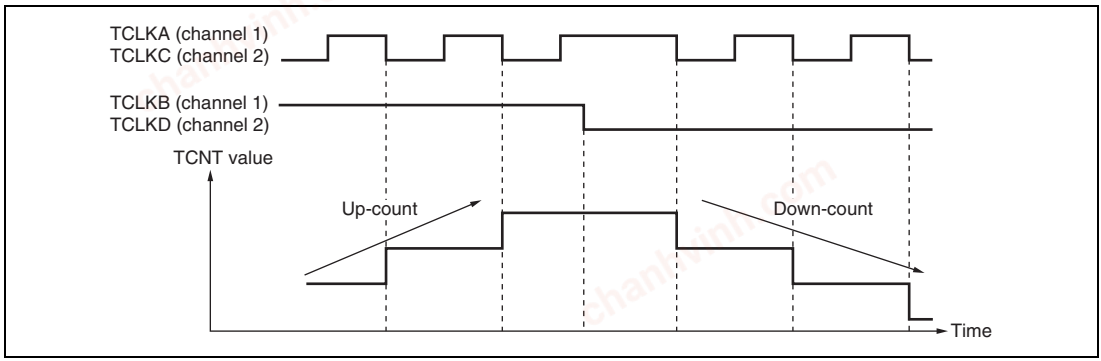

Figure 12.31 Example of Phase Counting Mode 2 Operation

Table 12.47 Up/Down-Count Conditions in Phase Counting Mode 2

TCLKA (Channel 1) TCLKC (Channel 2)	TCLKB (Channel 1) TCLKD (Channel 2)	Operation
High level	↑	Don't care
Low level	↓	Don't care
↑	Low level	Don't care
↓	High level	Up-count
High level	↓	Don't care
Low level	↑	Don't care
↑	High level	Don't care
↓	Low level	Down-count

[Legend]
↑: Rising edge
↓: Falling edge

chanhvinh.com

(c) Phase counting mode 3

Figure 12.32 shows an example of phase counting mode 3 operation, and table 12.48 summarizes the TCNT up/down-count conditions.

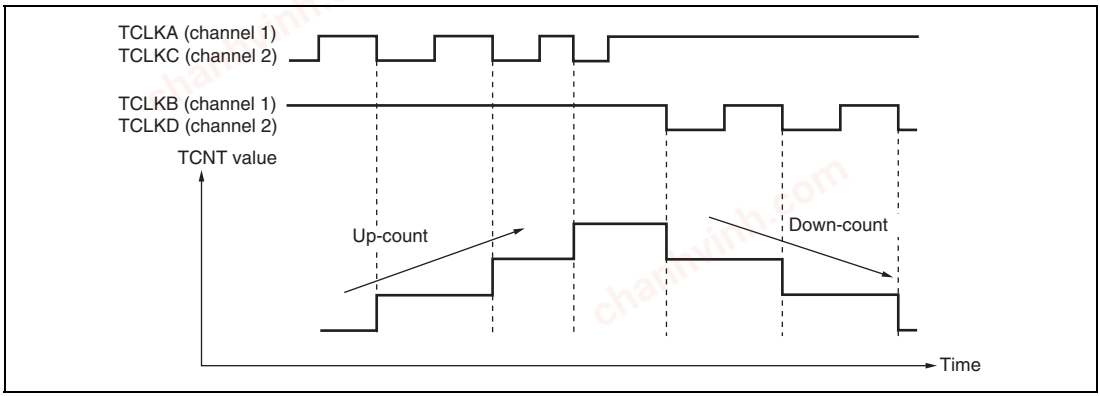

Figure 12.32 Example of Phase Counting Mode 3 Operation

Table 12.48 Up/Down-Count Conditions in Phase Counting Mode 3

TCLKA (Channel 1) TCLKC (Channel 2)	TCLKB (Channel 1) TCLKD (Channel 2)	Operation
High level	↑	Don't care
Low level	↓	Don't care
↑	Low level	Don't care
↓	High level	Up-count
High level	↓	Down-count
Low level	↑	Don't care
↑	High level	Don't care
↓	Low level	Don't care

[Legend]
↑: Rising edge
↓: Falling edge

chanhvinh.com

(d) Phase counting mode 4

Figure 12.33 shows an example of phase counting mode 4 operation, and table 12.49 summarizes the TCNT up/down-count conditions.

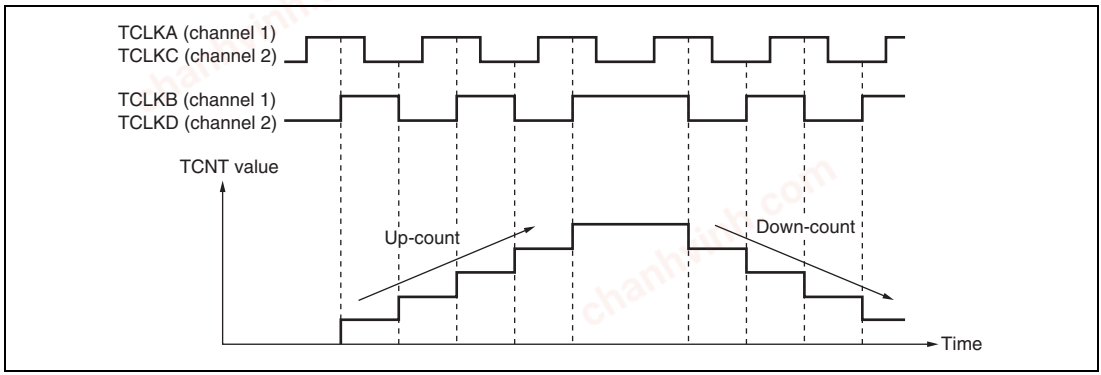

Figure 12.33 Example of Phase Counting Mode 4 Operation

Table 12.49 Up/Down-Count Conditions in Phase Counting Mode 4

TCLKA (Channel 1) TCLKC (Channel 2)	TCLKB (Channel 1) TCLKD (Channel 2)	Operation
High level	↑	Up-count
Low level	↓	
↑	Low level	Don't care
↓	High level	
High level	↓	Down-count
Low level	↑	
↑	High level	Don't care
↓	Low level	

[Legend]
↑: Rising edge
↓: Falling edge

chanhvinh.com

(3) Phase Counting Mode Application Example

Figure 12.34 shows an example in which channel 1 is in phase counting mode, and channel 1 is coupled with channel 0 to input servo motor 2-phase encoder pulses in order to detect position or speed.

Channel 1 is set to phase counting mode 1, and the encoder pulse A-phase and B-phase are input to TCLKA and TCLKB.

Channel 0 operates with TCNT counter clearing by TGRC_0 compare match; TGRA_0 and TGRC_0 are used for the compare match function and are set with the speed control period and position control period. TGRB_0 is used for input capture, with TGRB_0 and TGRD_0 operating in buffer mode. The channel 1 counter input clock is designated as the TGRB_0 input capture source, and the pulse widths of 2-phase encoder 4-multiplication pulses are detected.

TGRA_1 and TGRB_1 for channel 1 are designated for input capture, and channel 0 TGRA_0 and TGRC_0 compare matches are selected as the input capture source and store the up/down-counter values for the control periods.

This procedure enables the accurate detection of position and speed.

chanhvinh.com

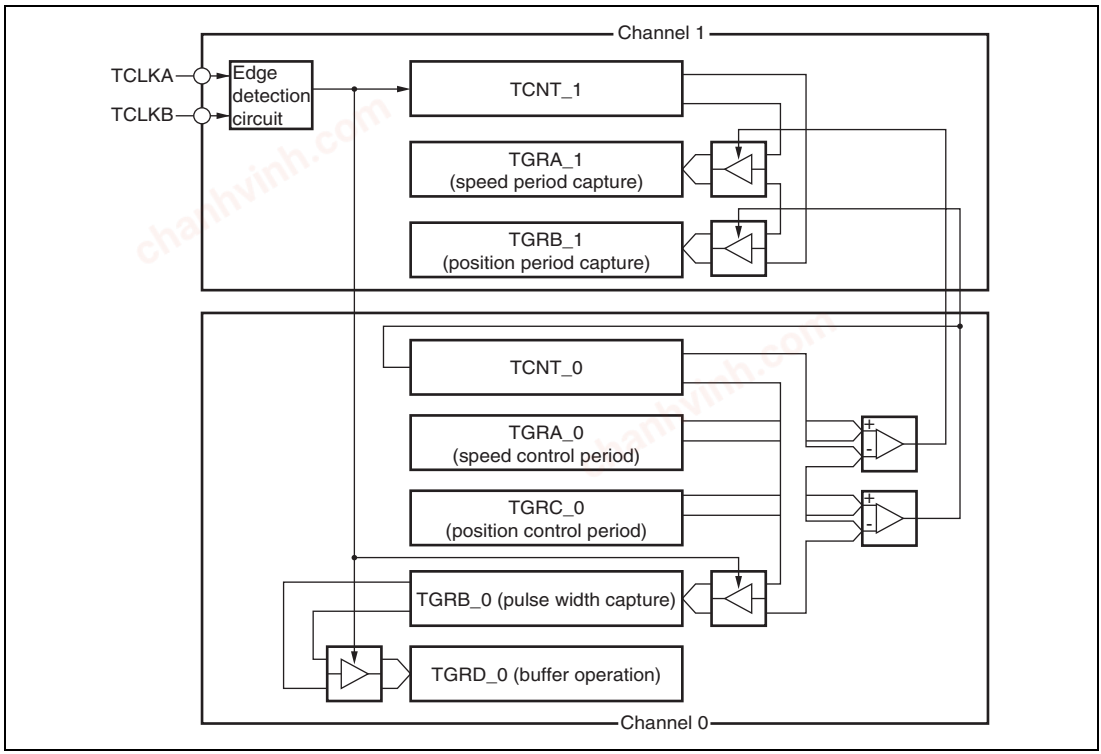

Figure 12.34 Phase Counting Mode Application Example

chanhvinh.com

12.4.7 Reset-Synchronized PWM Mode

In the reset-synchronized PWM mode, three-phase output of positive and negative PWM waveforms that share a common wave transition point can be obtained by combining channels 3 and 4.

When set for reset-synchronized PWM mode, the TIOC3B, TIOC3D, TIOC4A, TIOC4C, TIOC4B, and TIOC4D pins function as PWM output pins and TCNT3 functions as an upcounter.

Table 12.50 shows the PWM output pins used. Table 12.51 shows the settings of the registers.

Table 12.50 Output Pins for Reset-Synchronized PWM Mode

Channel	Output Pin	Description
3	TIOC3B	PWM output pin 1
	TIOC3D	PWM output pin 1' (negative-phase waveform of PWM output 1)
4	TIOC4A	PWM output pin 2
	TIOC4C	PWM output pin 2' (negative-phase waveform of PWM output 2)
	TIOC4B	PWM output pin 3
	TIOC4D	PWM output pin 3' (negative-phase waveform of PWM output 3)

Table 12.51 Register Settings for Reset-Synchronized PWM Mode

Register	Description of Setting
TCNT_3	Initial setting of H'0000
TCNT_4	Initial setting of H'0000
TGRA_3	Set count cycle for TCNT_3
TGRB_3	Sets the turning point for PWM waveform output by the TIOC3B and TIOC3D pins
TGRA_4	Sets the turning point for PWM waveform output by the TIOC4A and TIOC4C pins
TGRB_4	Sets the turning point for PWM waveform output by the TIOC4B and TIOC4D pins

chanhvinh.com

(1) Procedure for Selecting the Reset-Synchronized PWM Mode

Figure 12.35 shows an example of procedure for selecting the reset synchronized PWM mode.

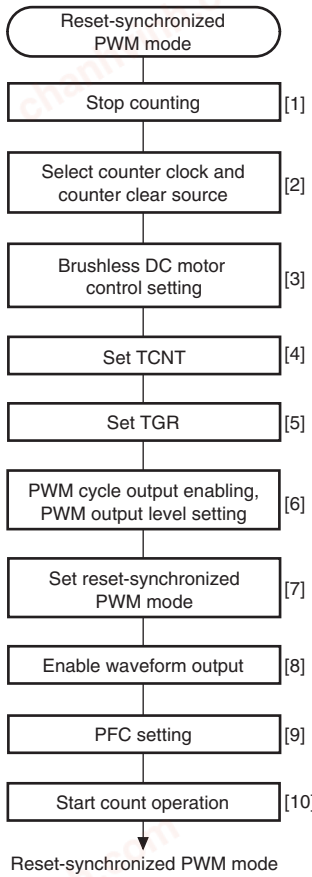

[1] Clear the CST3 and CST4 bits in the TSTR to 0 to halt the counting of TCNT. The reset-synchronized PWM mode must be set up while TCNT_3 and TCNT_4 are halted.

[2] Set bits TPSC2-TPSC0 and CKEG1 and CKEG0 in the TCR_3 to select the counter clock and clock edge for channel 3. Set bits CCLR2-CCLR0 in the TCR_3 to select TGRA compare-match as a counter clear source.

[3] When performing brushless DC motor control, set bit BDC in the timer gate control register (TGCR) and set the feedback signal input source and output chopping or gate signal direct output.

[4] Reset TCNT_3 and TCNT_4 to H'0000.

[5] TGRA_3 is the period register. Set the waveform period value in TGRA_3. Set the transition timing of the PWM output waveforms in TGRB_3, TGRA_4, and TGRB_4. Set times within the compare-match range of TCNT_3.
$X \leq$ TGRA_3 (X: set value).

[6] Select enabling/disabling of toggle output synchronized with the PMW cycle using bit PSYE in the timer output control register (TOCR), and set the PWM output level with bits OLSP and OLSN. When specifying the PWM output level by using TOLBR as a buffer for TOCR_2, see figure 11.3.

[7] Set bits MD3-MD0 in TMDR_3 to B'1000 to select the reset-synchronized PWM mode. Do not set to TMDR_4.

[8] Set the enabling/disabling of the PWM waveform output pin in TOER.

[9] Set the port control register and the port I/O register.

[10] Set the CST3 bit in the TSTR to 1 to start the count operation.

Note: The output waveform starts to toggle operation at the point of TCNT_3 = TGRA_3 = X by setting X = TGRA, i.e., cycle = duty.

Figure 12.35 Procedure for Selecting Reset-Synchronized PWM Mode

chanhvinh.com

(2) Reset-Synchronized PWM Mode Operation

Figure 12.36 shows an example of operation in the reset-synchronized PWM mode. TCNT_3 and TCNT_4 operate as upcounters. The counter is cleared when a TCNT_3 and TGRA_3 compare-match occurs, and then begins incrementing from H'0000. The PWM output pin output toggles with each occurrence of a TGRB_3, TGRA_4, TGRB_4 compare-match, and upon counter clears.

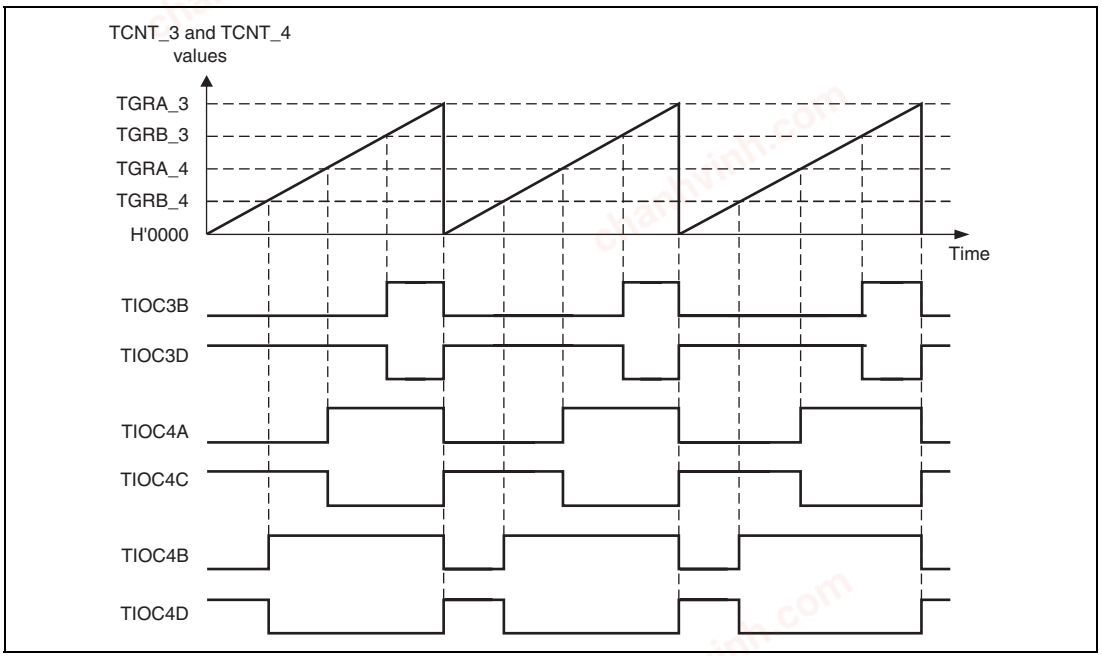

Figure 12.36 Reset-Synchronized PWM Mode Operation Example (When TOCR's OLSN = 1 and OLSP = 1)

chanhvinh.com

12.4.8 Complementary PWM Mode

In the complementary PWM mode, three-phase output of non-overlapping positive and negative PWM waveforms can be obtained by combining channels 3 and 4. PWM waveforms without non-overlapping interval are also available.

In complementary PWM mode, TIOC3B, TIOC3D, TIOC4A, TIOC4B, TIOC4C, and TIOC4D pins function as PWM output pins, the TIOC3A pin can be set for toggle output synchronized with the PWM period. TCNT_3 and TCNT_4 function as up/down counters.

Table 12.52 shows the PWM output pins used. Table 12.53 shows the settings of the registers used.

Table 12.52 Output Pins for Complementary PWM Mode

Channel	Output Pin	Description
3	TIOC3A	Toggle output synchronized with PWM period (or I/O port)
	TIOC3B	PWM output pin 1
	TIOC3C	I/O port*
	TIOC3D	PWM output pin 1' (non-overlapping negative-phase waveform of PWM output 1; PWM output without non-overlapping interval is also available)
4	TIOC4A	PWM output pin 2
	TIOC4B	PWM output pin 3
	TIOC4C	PWM output pin 2' (non-overlapping negative-phase waveform of PWM output 2; PWM output without non-overlapping interval is also available)
	TIOC4D	PWM output pin 3' (non-overlapping negative-phase waveform of PWM output 3; PWM output without non-overlapping interval is also available)

Note: * Avoid setting the TIOC3C pin as a timer I/O pin in the complementary PWM mode.

chanhvinh.com

Table 12.53 Register Settings for Complementary PWM Mode

Channel	Counter/Register	Description	Read/Write from CPU
3	TCNT_3	Start of up-count from value set in dead time register	Maskable by TRWER setting*
	TGRA_3	Set TCNT_3 upper limit value (1/2 carrier cycle + dead time)	Maskable by TRWER setting*
	TGRB_3	PWM output 1 compare register	Maskable by TRWER setting*
	TGRC_3	TGRA_3 buffer register	Always readable/writable
	TGRD_3	PWM output 1/TGRB_3 buffer register	Always readable/writable
4	TCNT_4	Up-count start, initialized to H'0000	Maskable by TRWER setting*
	TGRA_4	PWM output 2 compare register	Maskable by TRWER setting*
	TGRB_4	PWM output 3 compare register	Maskable by TRWER setting*
	TGRC_4	PWM output 2/TGRA_4 buffer register	Always readable/writable
	TGRD_4	PWM output 3/TGRB_4 buffer register	Always readable/writable
Timer dead time data register (TDDR)		Set TCNT_4 and TCNT_3 offset value (dead time value)	Maskable by TRWER setting*
Timer cycle data register (TCDR)		Set TCNT_4 upper limit value (1/2 carrier cycle)	Maskable by TRWER setting*
Timer cycle buffer register (TCBR)		TCDR buffer register	Always readable/writable
Subcounter (TCNTS)		Subcounter for dead time generation	Read-only
Temporary register 1 (TEMP1)		PWM output 1/TGRB_3 temporary register	Not readable/writable
Temporary register 2 (TEMP2)		PWM output 2/TGRA_4 temporary register	Not readable/writable
Temporary register 3 (TEMP3)		PWM output 3/TGRB_4 temporary register	Not readable/writable

Note: * Access can be enabled or disabled according to the setting of bit 0 (RWE) in TRWER (timer read/write enable register).

chanhvinh.com

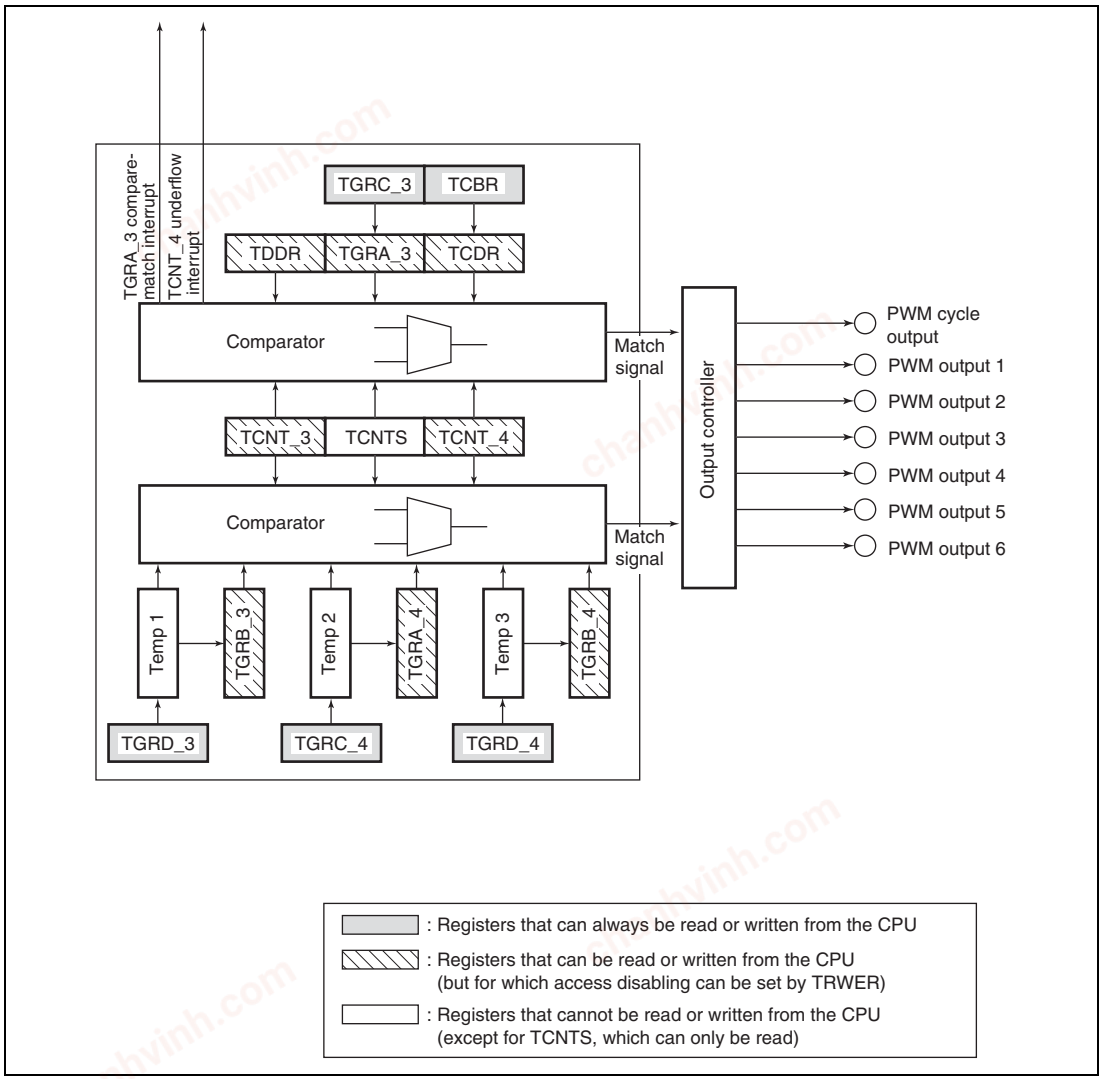

Figure 12.37 Block Diagram of Channels 3 and 4 in Complementary PWM Mode

chanhvinh.com

(1) Example of Complementary PWM Mode Setting Procedure

An example of the complementary PWM mode setting procedure is shown in figure 12.38.

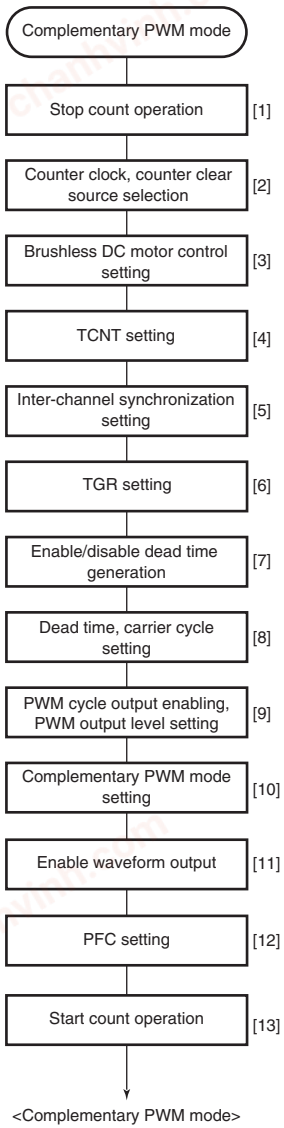

[1] Clear bits CST3 and CST4 in the timer start register (TSTR) to 0, and halt timer counter (TCNT) operation. Perform complementary PWM mode setting when TCNT_3 and TCNT_4 are stopped.

[2] Set the same counter clock and clock edge for channels 3 and 4 with bits TPSC2-TPSC0 and bits CKEG1 and CKEG0 in the timer control register (TCR). Use bits CCLR2-CCLR0 to set synchronous clearing only when restarting by a synchronous clear from another channel during complementary PWM mode operation.

[3] When performing brushless DC motor control, set bit BDC in the timer gate control register (TGCR) and set the feedback signal input source and output chopping or gate signal direct output.

[4] Set the dead time in TCNT_3. Set TCNT_4 to H'0000.

[5] Set only when restarting by a synchronous clear from another channel during complementary PWM mode operation. In this case, synchronize the channel generating the synchronous clear with channels 3 and 4 using the timer synchro register (TSYR).

[6] Set the output PWM duty in the duty registers (TGRB_3, TGRA_4, TGRB_4) and buffer registers (TGRD_3, TGRC_4, TGRD_4). Set the same initial value in each corresponding TGR.

[7] This setting is necessary only when no dead time should be generated. Make appropriate settings in the timer dead time enable register (TDER) so that no dead time is generated.

[8] Set the dead time in the dead time register (TDDR), 1/2 the carrier cycle in the timer cycle data register (TCDR) and timer cycle buffer register (TCBR), and 1/2 the carrier cycle plus the dead time in TGRA_3 and TGRC_3. When no dead time generation is selected, set 1 in TDDR and 1/2 the carrier cycle + 1 in TGRA_3 and TGRC_3.

[9] Select enabling/disabling of toggle output synchronized with the PWM cycle using bit PSYE in the timer output control register 1 (TOCR1), and set the PWM output level with bits OLSP and OLSN. When specifying the PWM output level by using TOLBR as a buffer for TOCR_2, see figure 11.3.

[10] Select complementary PWM mode in timer mode register 3 (TMDR_3). Do not set in TMDR_4.

[11] Set enabling/disabling of PWM waveform output pin output in the timer output master enable register (TOER).

[12] Set the port control register and the port I/O register.

[13] Set bits CST3 and CST4 in TSTR to 1 simultaneously to start the count operation.

Figure 12.38 Example of Complementary PWM Mode Setting Procedure

chanhvinh.com

(2) Outline of Complementary PWM Mode Operation

In complementary PWM mode, 6-phase PWM output is possible. Figure 12.39 illustrates counter operation in complementary PWM mode, and figure 12.40 shows an example of complementary PWM mode operation.

(a) Counter Operation

In complementary PWM mode, three counters—TCNT_3, TCNT_4, and TCNTS—perform up/down-count operations.

TCNT_3 is automatically initialized to the value set in TDDR when complementary PWM mode is selected and the CST bit in TSTR is 0.

When the CST bit is set to 1, TCNT_3 counts up to the value set in TGRA_3, then switches to down-counting when it matches TGRA_3. When the TCNT3 value matches TDDR, the counter switches to up-counting, and the operation is repeated in this way.

TCNT_4 is initialized to H'0000.

When the CST bit is set to 1, TCNT4 counts up in synchronization with TCNT_3, and switches to down-counting when it matches TCDR. On reaching H'0000, TCNT4 switches to up-counting, and the operation is repeated in this way.

TCNTS is a read-only counter. It need not be initialized.

When TCNT_3 matches TCDR during TCNT_3 and TCNT_4 up/down-counting, down-counting is started, and when TCNTS matches TCDR, the operation switches to up-counting. When TCNTS matches TGRA_3, it is cleared to H'0000.

When TCNT_4 matches TDDR during TCNT_3 and TCNT_4 down-counting, up-counting is started, and when TCNTS matches TDDR, the operation switches to down-counting. When TCNTS reaches H'0000, it is set with the value in TGRA_3.

TCNTS is compared with the compare register and temporary register in which the PWM duty is set during the count operation only.

chanhvinh.com

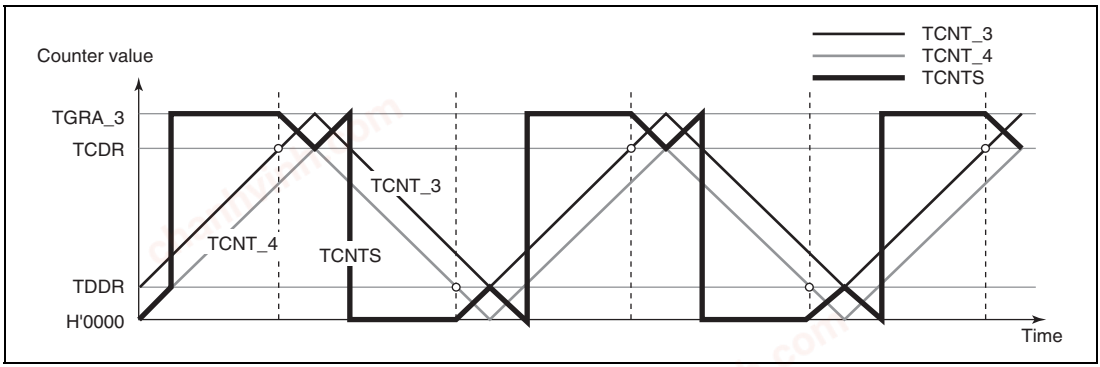

Figure 12.39 Complementary PWM Mode Counter Operation

(b) Register Operation

In complementary PWM mode, nine registers are used, comprising compare registers, buffer registers, and temporary registers. Figure 12.40 shows an example of complementary PWM mode operation.

The registers which are constantly compared with the counters to perform PWM output are TGRB_3, TGRA_4, and TGRB_4. When these registers match the counter, the value set in bits OLSN and OLSP in the timer output control register (TOCR) is output.

The buffer registers for these compare registers are TGRD_3, TGRC_4, and TGRD_4.

Between a buffer register and compare register there is a temporary register. The temporary registers cannot be accessed by the CPU.

Data in a compare register is changed by writing the new data to the corresponding buffer register. The buffer registers can be read or written at any time.

The data written to a buffer register is constantly transferred to the temporary register in the Ta interval. Data is not transferred to the temporary register in the Tb interval. Data written to a buffer register in this interval is transferred to the temporary register at the end of the Tb interval.

The value transferred to a temporary register is transferred to the compare register when TCNTS for which the Tb interval ends matches TGRA_3 when counting up, or H'0000 when counting down. The timing for transfer from the temporary register to the compare register can be selected with bits MD3 to MD0 in the timer mode register (TMDR). Figure 12.40 shows an example in which the mode is selected in which the change is made in the trough.

chanhvinh.com

In the tb interval (tb1 in figure 12.40) in which data transfer to the temporary register is not performed, the temporary register has the same function as the compare register, and is compared with the counter. In this interval, therefore, there are two compare match registers for one-phase output, with the compare register containing the pre-change data, and the temporary register containing the new data. In this interval, the three counters—TCNT_3, TCNT_4, and TCNTS—and two registers—compare register and temporary register—are compared, and PWM output controlled accordingly.

chanhvinh.com

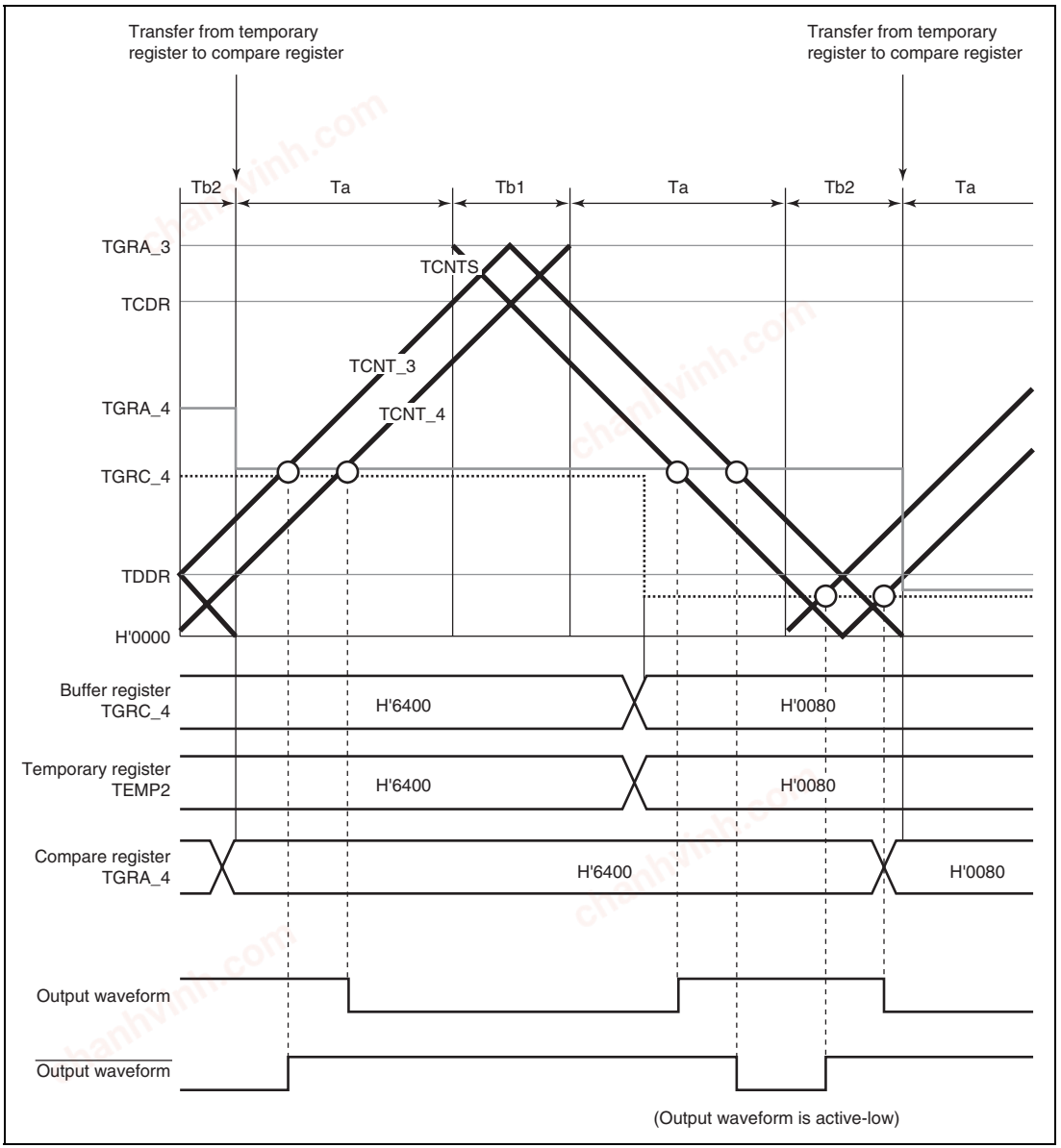

Figure 12.40 Example of Complementary PWM Mode Operation

chanhvinh.com

(c) Initialization

In complementary PWM mode, there are six registers that must be initialized. In addition, there is a register that specifies whether to generate dead time (it should be used only when dead time generation should be disabled).

Before setting complementary PWM mode with bits MD3 to MD0 in the timer mode register (TMDR), the following initial register values must be set.

TGRC_3 operates as the buffer register for TGRA_3, and should be set with 1/2 the PWM carrier cycle + dead time Td. The timer cycle buffer register (TCBR) operates as the buffer register for the timer cycle data register (TCDR), and should be set with 1/2 the PWM carrier cycle. Set dead time Td in the timer dead time data register (TDDR).

When dead time is not needed, the TDER bit in the timer dead time enable register (TDER) should be cleared to 0, TGRC_3 and TGRA_3 should be set to 1/2 the PWM carrier cycle + 1, and TDDR should be set to 1.

Set the respective initial PWM duty values in buffer registers TGRD_3, TGRC_4, and TGRD_4.

The values set in the five buffer registers excluding TDDR are transferred simultaneously to the corresponding compare registers when complementary PWM mode is set.

Set TCNT_4 to H'0000 before setting complementary PWM mode.

Table 12.54 Registers and Counters Requiring Initialization

Register/Counter	Set Value
TGRC_3	1/2 PWM carrier cycle + dead time Td (1/2 PWM carrier cycle + 1 when dead time generation is disabled by TDER)
TDDR	Dead time Td (1 when dead time generation is disabled by TDER)
TCBR	1/2 PWM carrier cycle
TGRD_3, TGRC_4, TGRD_4	Initial PWM duty value for each phase
TCNT_4	H'0000

Note: The TGRC_3 set value must be the sum of 1/2 the PWM carrier cycle set in TCBR and dead time Td set in TDDR. When dead time generation is disabled by TDER, TGRC_3 must be set to 1/2 the PWM carrier cycle + 1.

chanhvinh.com

(d) PWM Output Level Setting

In complementary PWM mode, the PWM pulse output level is set with bits OLSN and OLSP in timer output control register 1 (TOCR1) or bits OLS1P to OLS3P and OLS1N to OLS3N in timer output control register 2 (TOCR2).

The output level can be set for each of the three positive phases and three negative phases of 6-phase output.

Complementary PWM mode should be cleared before setting or changing output levels.

(e) Dead Time Setting

In complementary PWM mode, PWM pulses are output with a non-overlapping relationship between the positive and negative phases. This non-overlap time is called the dead time.

The non-overlap time is set in the timer dead time data register (TDDR). The value set in TDDR is used as the TCNT_3 counter start value, and creates non-overlap between TCNT_3 and TCNT_4. Complementary PWM mode should be cleared before changing the contents of TDDR.

(f) Dead Time Suppressing

Dead time generation is suppressed by clearing the TDER bit in the timer dead time enable register (TDER) to 0. TDER can be cleared to 0 only when 0 is written to it after reading TDER = 1.

TGRA_3 and TGRC_3 should be set to 1/2 PWM carrier cycle + 1 and the timer dead time data register (TDDR) should be set to 1.

By the above settings, PWM waveforms without dead time can be obtained. Figure 12.41 shows an example of operation without dead time.

chanhvinh.com

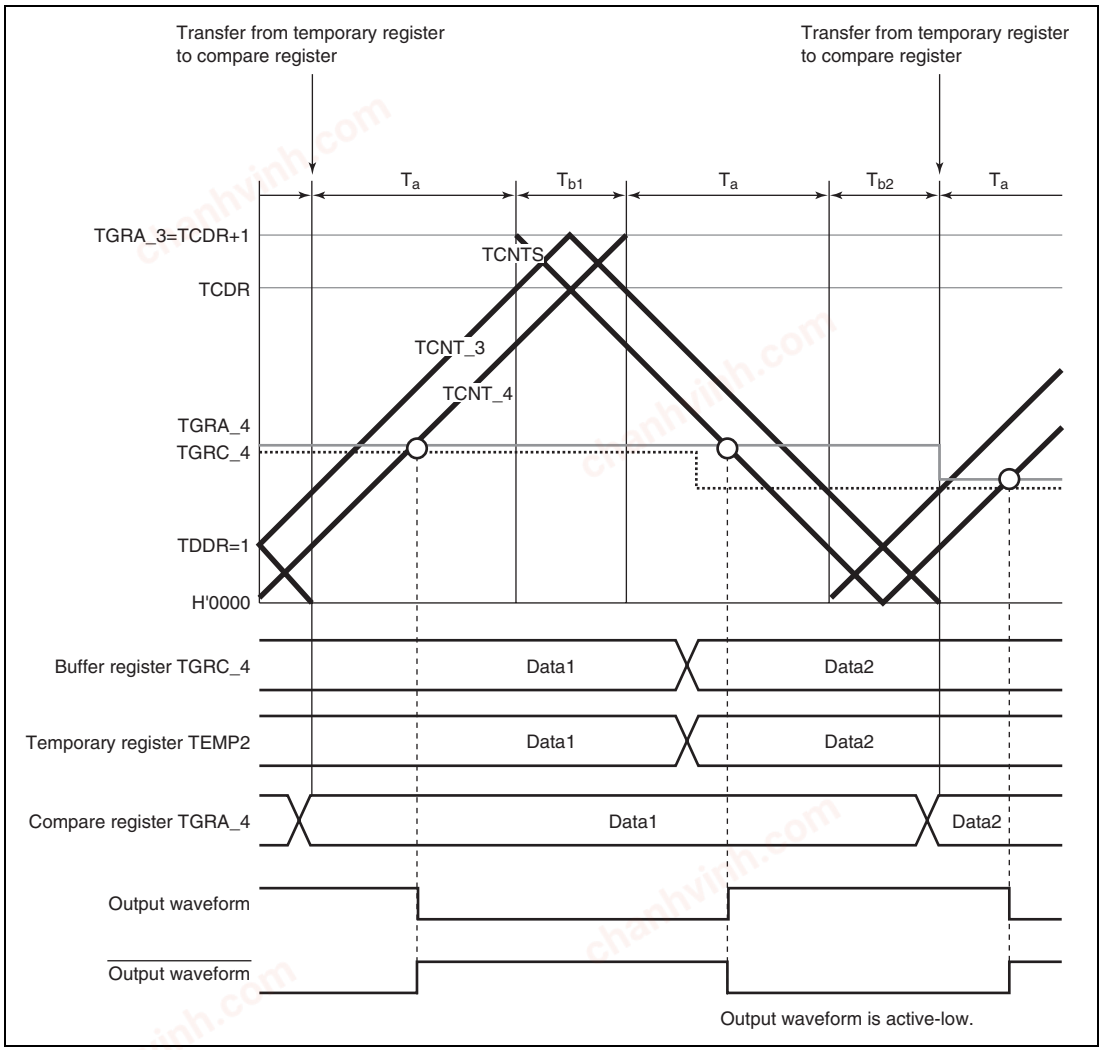

Figure 12.41 Example of Operation without Dead Time

chanhvinh.com

(g) PWM Cycle Setting

In complementary PWM mode, the PWM pulse cycle is set in two registers—TGRA_3, in which the TCNT_3 upper limit value is set, and TCDR, in which the TCNT_4 upper limit value is set. The settings should be made so as to achieve the following relationship between these two registers:

With dead time: TGRA_3 set value = TCDR set value + TDDR set value
Without dead time: TGRA_3 set value = TCDR set value + 1

The TGRA_3 and TCDR settings are made by setting the values in buffer registers TGRC_3 and TCBR. The values set in TGRC_3 and TCBR are transferred simultaneously to TGRA_3 and TCDR in accordance with the transfer timing selected with bits MD3 to MD0 in the timer mode register (TMDR).

The updated PWM cycle is reflected from the next cycle when the data update is performed at the crest, and from the current cycle when performed in the trough. Figure 12.42 illustrates the operation when the PWM cycle is updated at the crest.

See (h) Register Data Updating, for the method of updating the data in each buffer register.

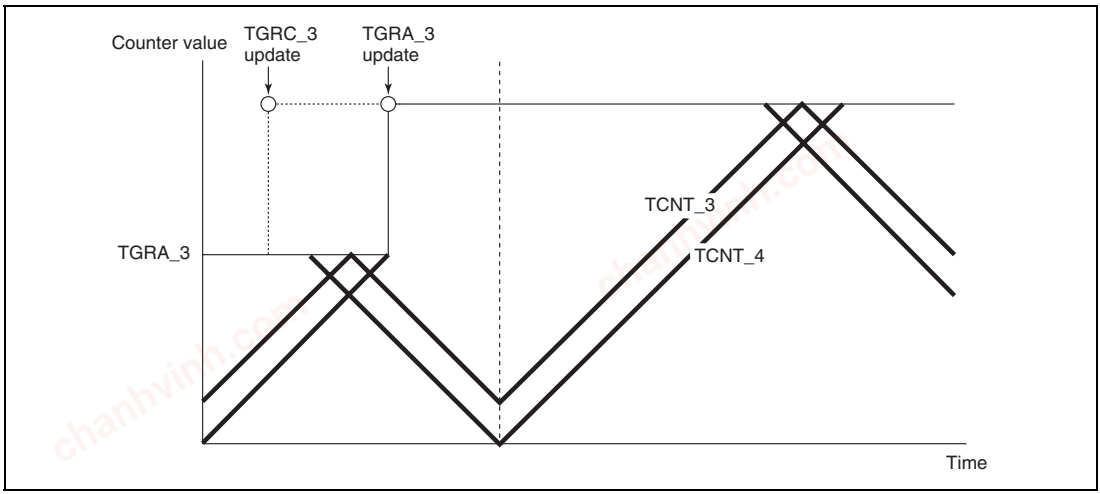

Figure 12.42 Example of PWM Cycle Updating

chanhvinh.com

(h) Register Data Updating

In complementary PWM mode, the buffer register is used to update the data in a compare register. The update data can be written to the buffer register at any time. There are five PWM duty and carrier cycle registers that have buffer registers and can be updated during operation.

There is a temporary register between each of these registers and its buffer register. When subcounter TCNTS is not counting, if buffer register data is updated, the temporary register value is also rewritten. Transfer is not performed from buffer registers to temporary registers when TCNTS is counting; in this case, the value written to a buffer register is transferred after TCNTS halts.

The temporary register value is transferred to the compare register at the data update timing set with bits MD3 to MD0 in the timer mode register (TMDR). Figure 12.43 shows an example of data updating in complementary PWM mode. This example shows the mode in which data updating is performed at both the counter crest and trough.

When rewriting buffer register data, a write to TGRD_4 must be performed at the end of the update. Data transfer from the buffer registers to the temporary registers is performed simultaneously for all five registers after the write to TGRD_4.

A write to TGRD_4 must be performed after writing data to the registers to be updated, even when not updating all five registers, or when updating the TGRD_4 data. In this case, the data written to TGRD_4 should be the same as the data prior to the write operation.

chanhvinh.com

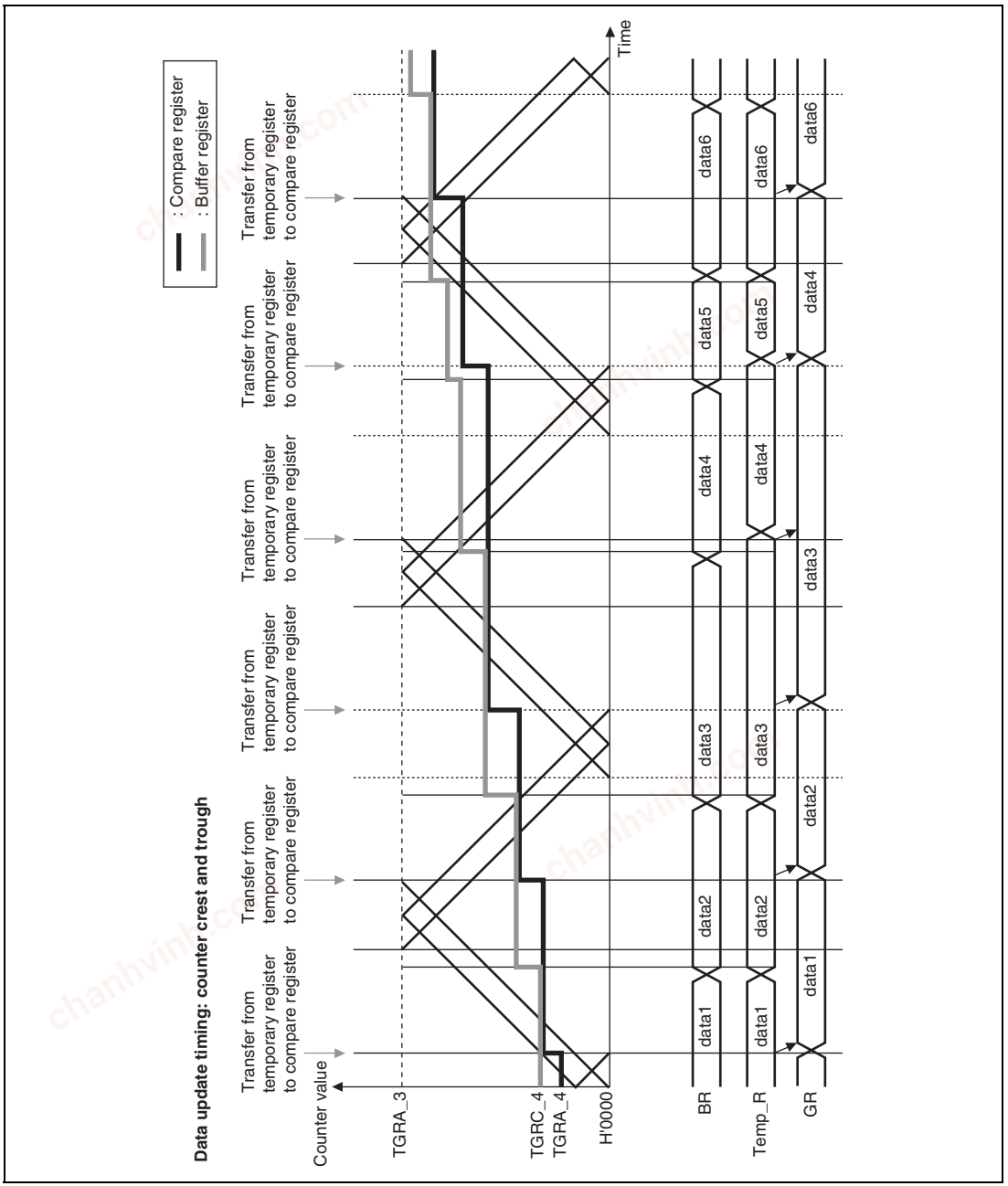

Figure 12.43 Example of Data Update in Complementary PWM Mode

chanhvinh.com

(i) Initial Output in Complementary PWM Mode

In complementary PWM mode, the initial output is determined by the setting of bits OLSN and OLSP in timer output control register 1 (TOCR1) or bits OLS1N to OLS3N and OLS1P to OLS3P in timer output control register 2 (TOCR2).

This initial output is the PWM pulse non-active level, and is output from when complementary PWM mode is set with the timer mode register (TMDR) until TCNT_4 exceeds the value set in the dead time register (TDDR). Figure 12.44 shows an example of the initial output in complementary PWM mode.

An example of the waveform when the initial PWM duty value is smaller than the TDDR value is shown in figure 12.45.

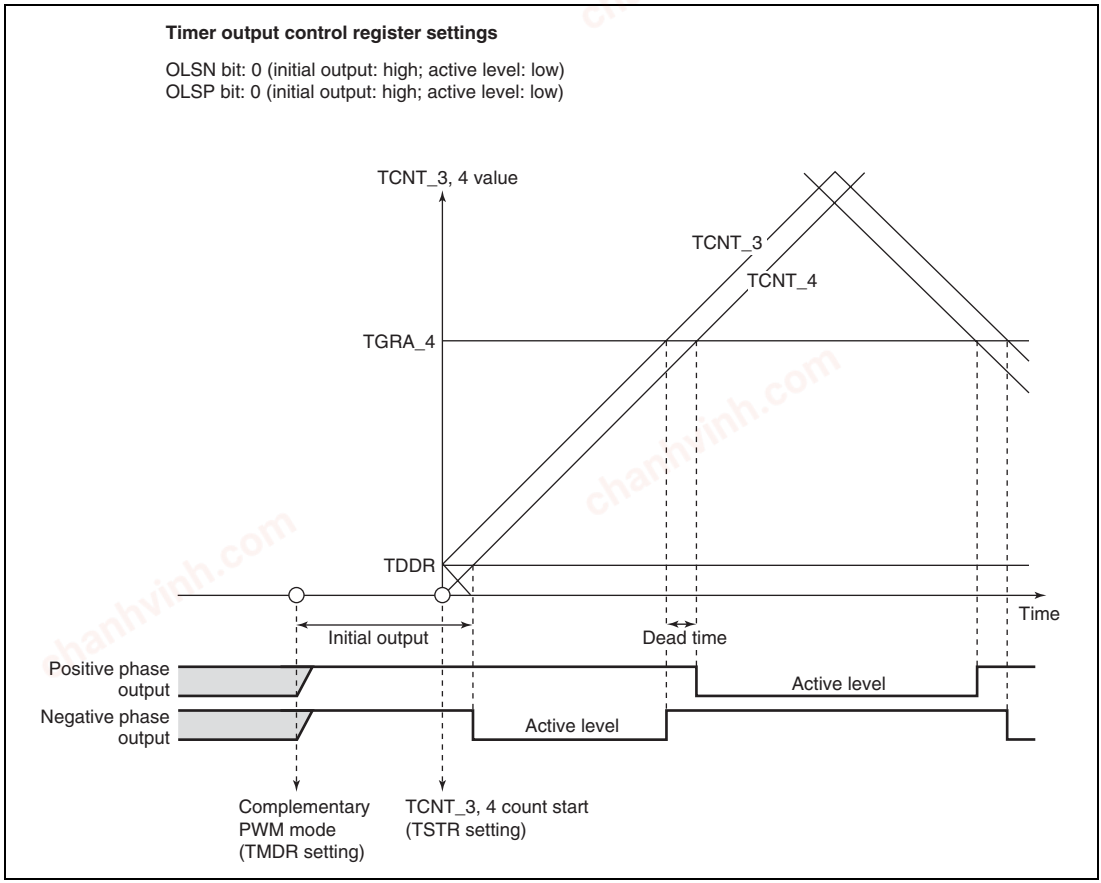

Figure 12.44 Example of Initial Output in Complementary PWM Mode (1)

chanhvinh.com

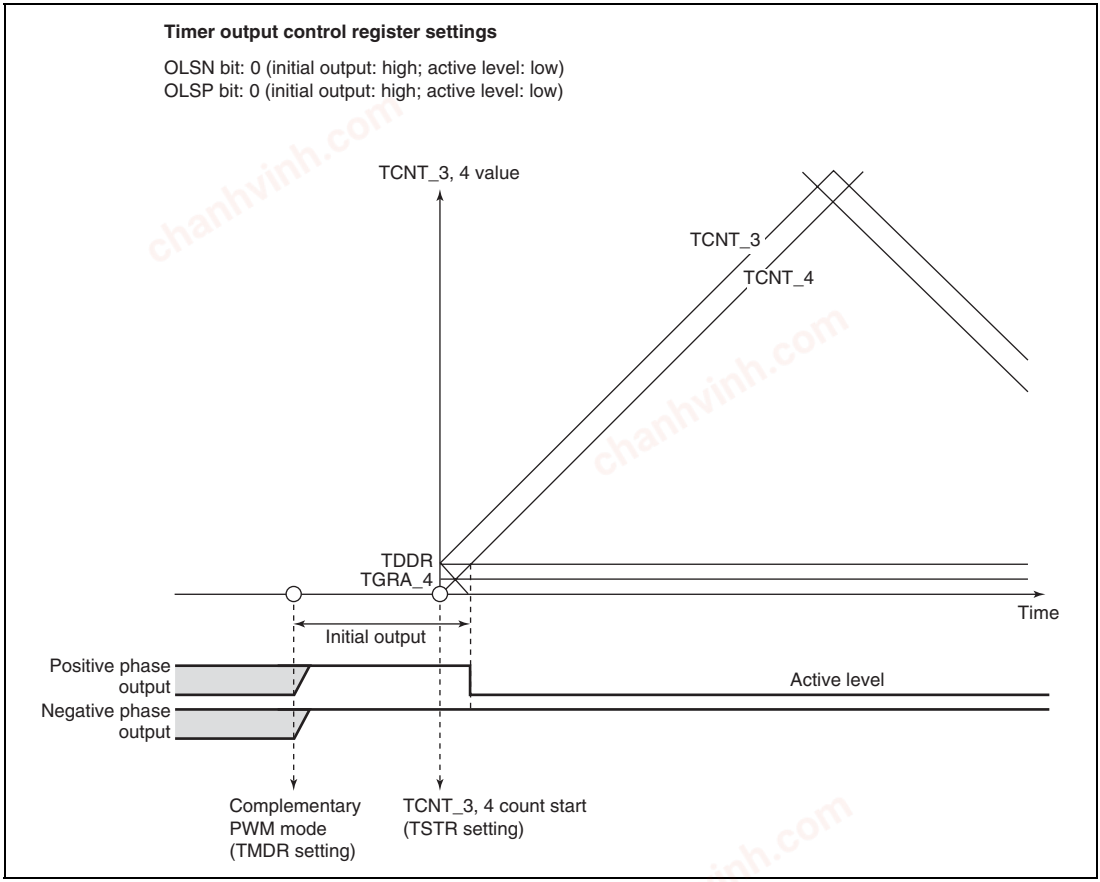

Figure 12.45 Example of Initial Output in Complementary PWM Mode (2)

chanhvinh.com

(j) Complementary PWM Mode PWM Output Generation Method

In complementary PWM mode, 3-phase output is performed of PWM waveforms with a non-overlap time between the positive and negative phases. This non-overlap time is called the dead time.

A PWM waveform is generated by output of the output level selected in the timer output control register in the event of a compare-match between a counter and compare register. While TCNTS is counting, compare register and temporary register values are simultaneously compared to create consecutive PWM pulses from 0 to 100%. The relative timing of on and off compare-match occurrence may vary, but the compare-match that turns off each phase takes precedence to secure the dead time and ensure that the positive phase and negative phase on times do not overlap. Figures 12.46 to 12.48 show examples of waveform generation in complementary PWM mode.

The positive phase/negative phase off timing is generated by a compare-match with the solid-line counter, and the on timing by a compare-match with the dotted-line counter operating with a delay of the dead time behind the solid-line counter. In the T1 period, compare-match **a** that turns off the negative phase has the highest priority, and compare-matches occurring prior to **a** are ignored. In the T2 period, compare-match **c** that turns off the positive phase has the highest priority, and compare-matches occurring prior to **c** are ignored.

In normal cases, compare-matches occur in the order **a** → **b** → **c** → **d** (or **c** → **d** → **a'** → **b'**), as shown in figure 12.46.

If compare-matches deviate from the **a** → **b** → **c** → **d** order, since the time for which the negative phase is off is less than twice the dead time, the figure shows the positive phase is not being turned on. If compare-matches deviate from the **c** → **d** → **a'** → **b'** order, since the time for which the positive phase is off is less than twice the dead time, the figure shows the negative phase is not being turned on.

If compare-match **c** occurs first following compare-match **a**, as shown in figure 12.47, compare-match **b** is ignored, and the negative phase is turned off by compare-match **d**. This is because turning off of the positive phase has priority due to the occurrence of compare-match **c** (positive phase off timing) before compare-match **b** (positive phase on timing) (consequently, the waveform does not change since the positive phase goes from off to off).

Similarly, in the example in figure 12.48, compare-match **a'** with the new data in the temporary register occurs before compare-match **c**, but other compare-matches occurring up to **c**, which turns off the positive phase, are ignored. As a result, the negative phase is not turned on.

Thus, in complementary PWM mode, compare-matches at turn-off timings take precedence, and turn-on timing compare-matches that occur before a turn-off timing compare-match are ignored.

chanhvinh.com

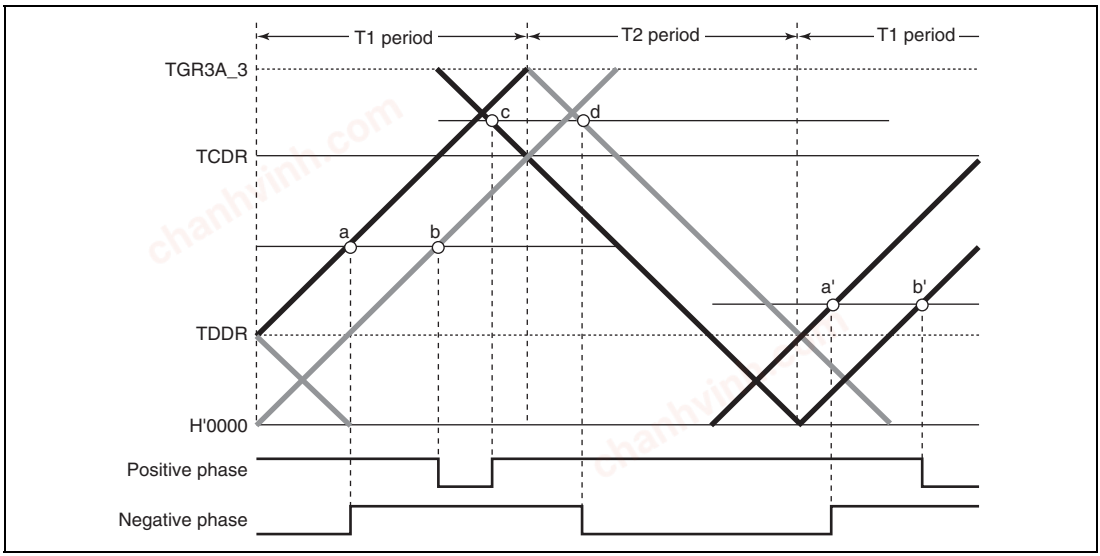

Figure 12.46 Example of Complementary PWM Mode Waveform Output (1)

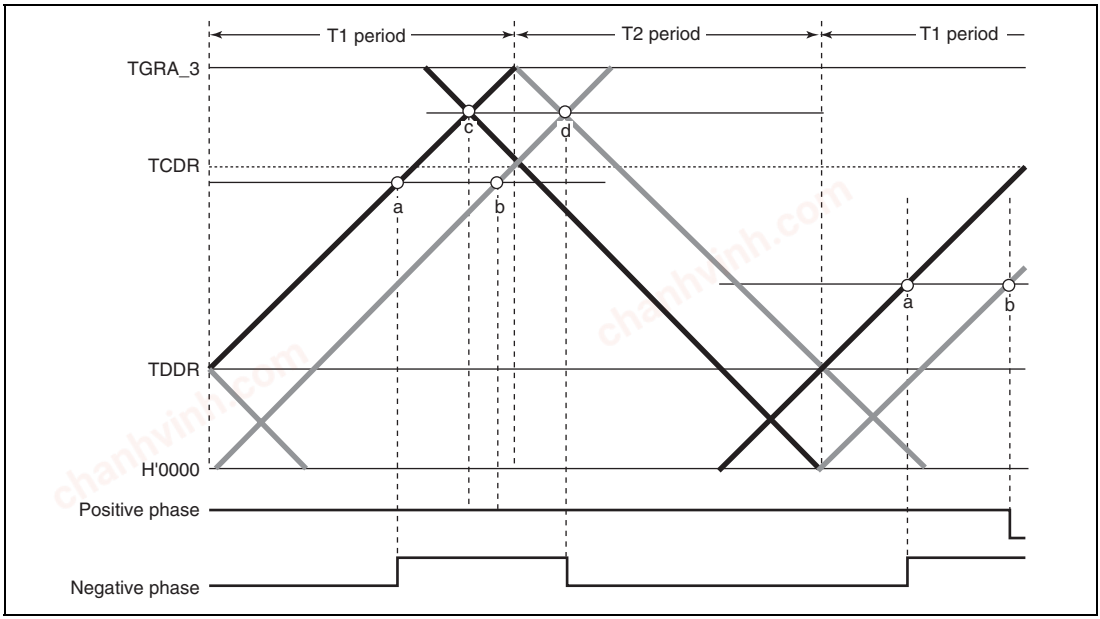

Figure 12.47 Example of Complementary PWM Mode Waveform Output (2)

chanhvinh.com

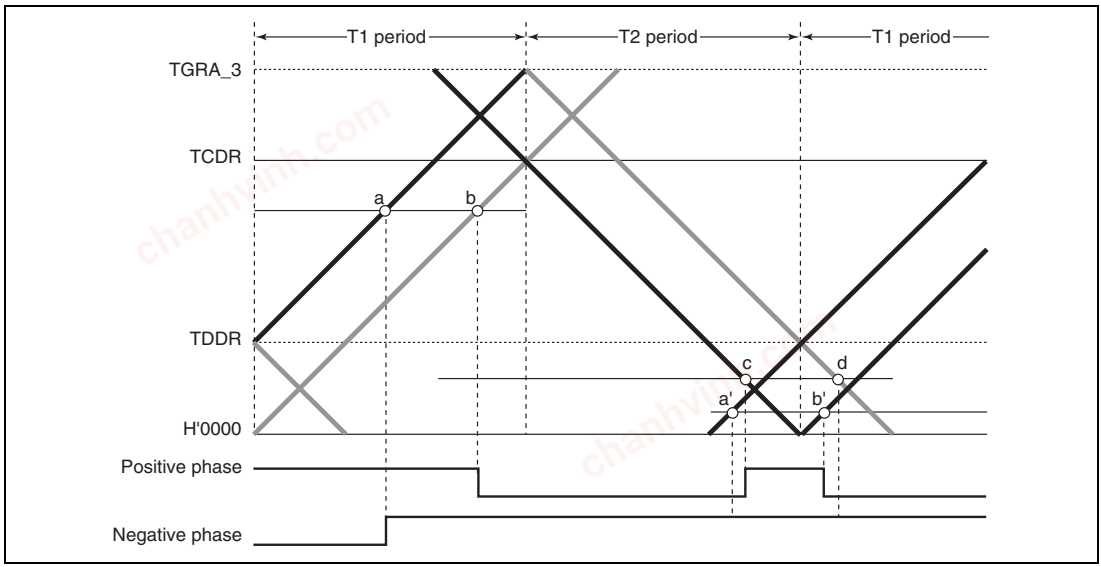

Figure 12.48 Example of Complementary PWM Mode Waveform Output (3)

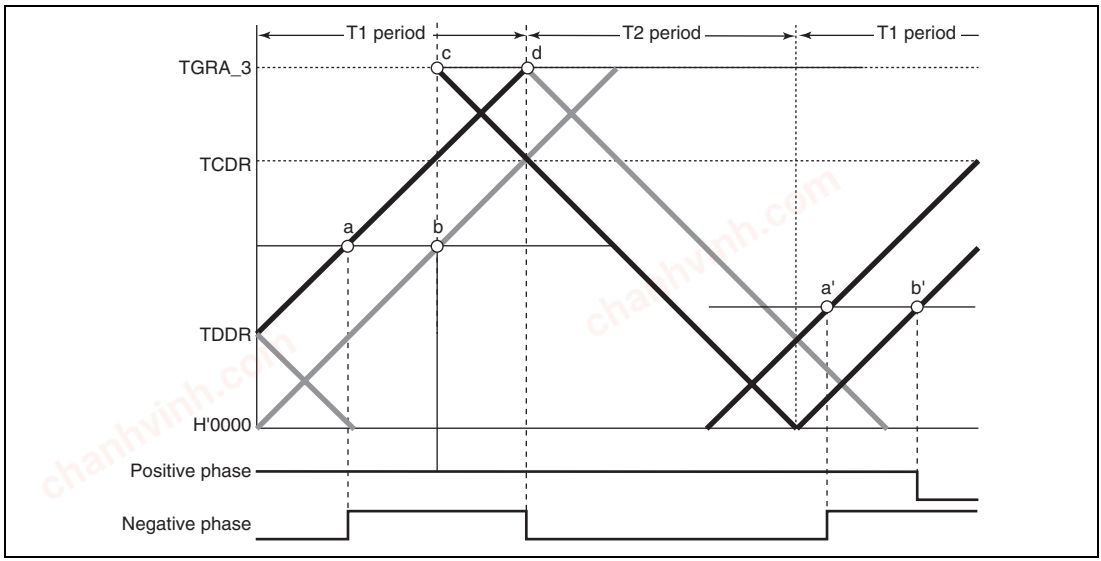

Figure 12.49 Example of Complementary PWM Mode 0% and 100% Waveform Output (1)

chanhvinh.com

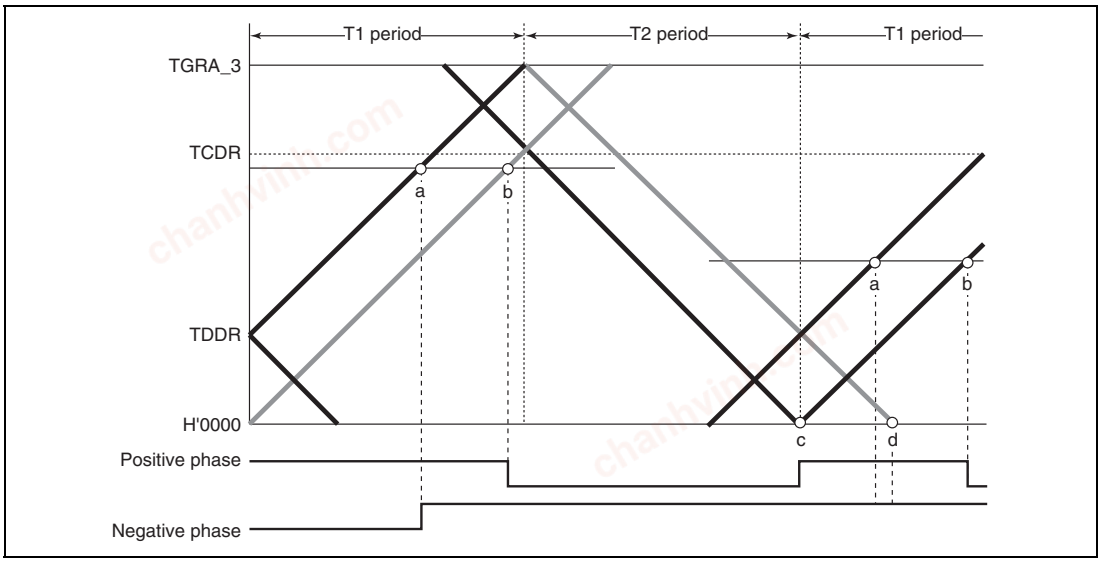

Figure 12.50 Example of Complementary PWM Mode 0% and 100% Waveform Output (2)

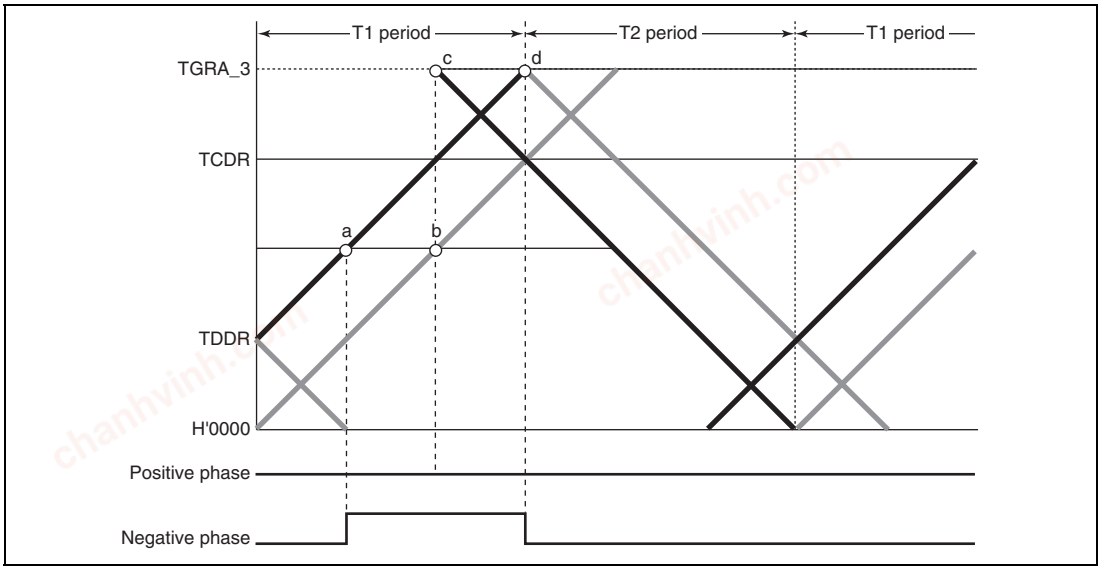

Figure 12.51 Example of Complementary PWM Mode 0% and 100% Waveform Output (3)

chanhvinh.com

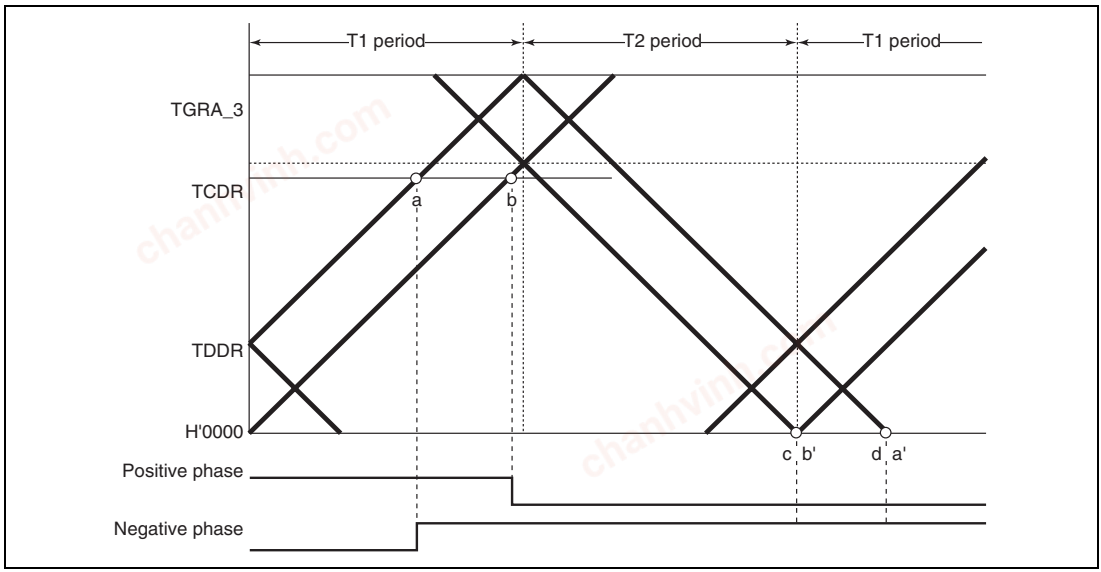

Figure 12.52 Example of Complementary PWM Mode 0% and 100% Waveform Output (4)

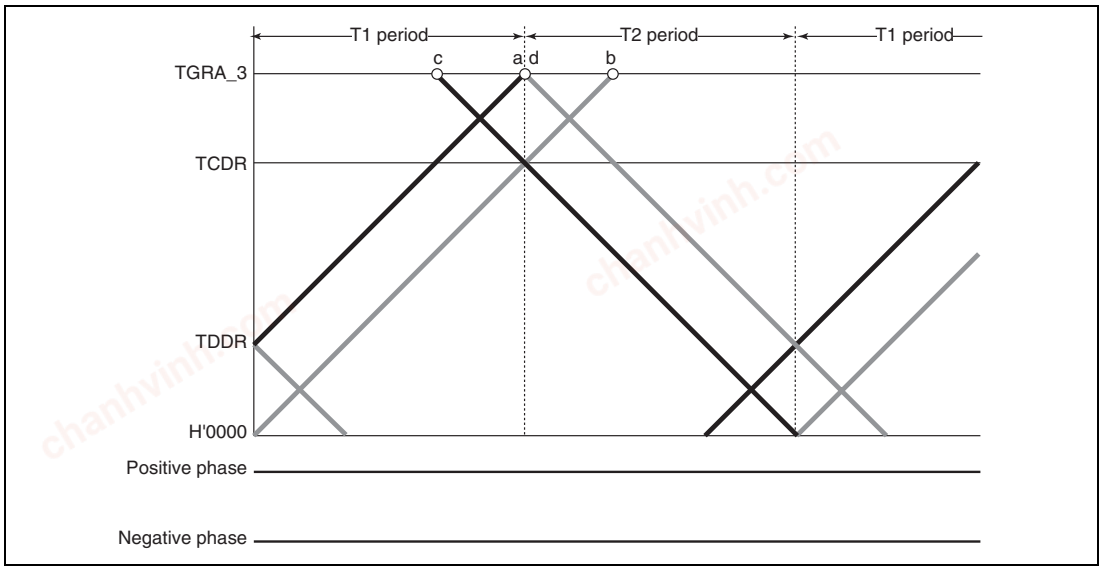

Figure 12.53 Example of Complementary PWM Mode 0% and 100% Waveform Output (5)

chanhvinh.com

(k) Complementary PWM Mode 0% and 100% Duty Output

In complementary PWM mode, 0% and 100% duty cycles can be output as required. Figures 12.49 to 12.53 show output examples.

100% duty output is performed when the compare register value is set to H'0000. The waveform in this case has a positive phase with a 100% on-state. 0% duty output is performed when the compare register value is set to the same value as TGRA_3. The waveform in this case has a positive phase with a 100% off-state.

On and off compare-matches occur simultaneously, but if a turn-on compare-match and turn-off compare-match for the same phase occur simultaneously, both compare-matches are ignored and the waveform does not change.

(l) Toggle Output Synchronized with PWM Cycle

In complementary PWM mode, toggle output can be performed in synchronization with the PWM carrier cycle by setting the PSYE bit to 1 in the timer output control register (TOCR). An example of a toggle output waveform is shown in figure 12.54.

This output is toggled by a compare-match between TCNT_3 and TGRA_3 and a compare-match between TCNT4 and H'0000.

The output pin for this toggle output is the TIOC3A pin. The initial output is 1.

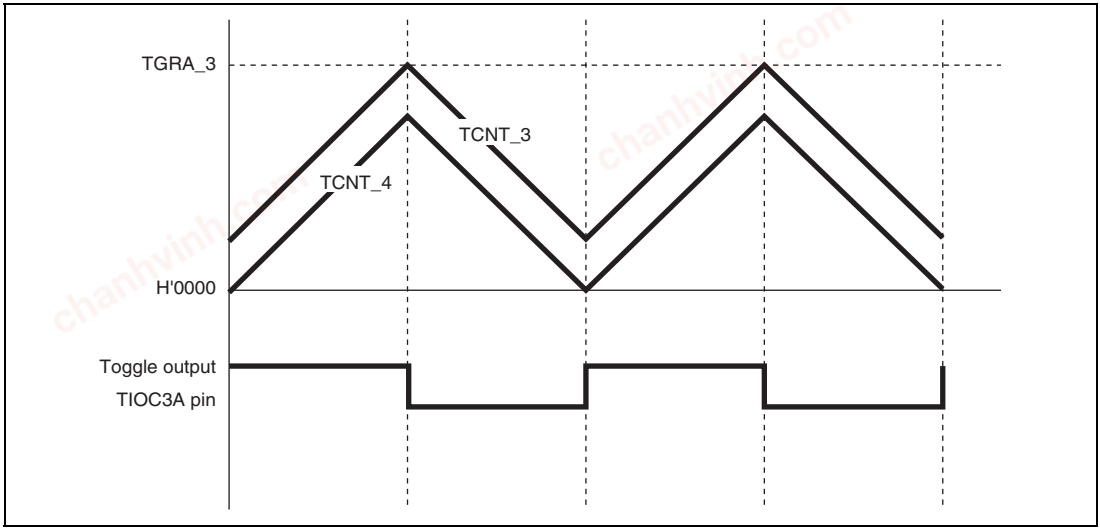

Figure 12.54 Example of Toggle Output Waveform Synchronized with PWM Output

chanhvinh.com

(m) Counter Clearing by Another Channel

In complementary PWM mode, by setting a mode for synchronization with another channel by means of the timer synchronous register (TSYR), and selecting synchronous clearing with bits CCLR2 to CCLR0 in the timer control register (TCR), it is possible to have TCNT_3, TCNT_4, and TCNTS cleared by another channel.

Figure 12.55 illustrates the operation.

Use of this function enables counter clearing and restarting to be performed by means of an external signal.

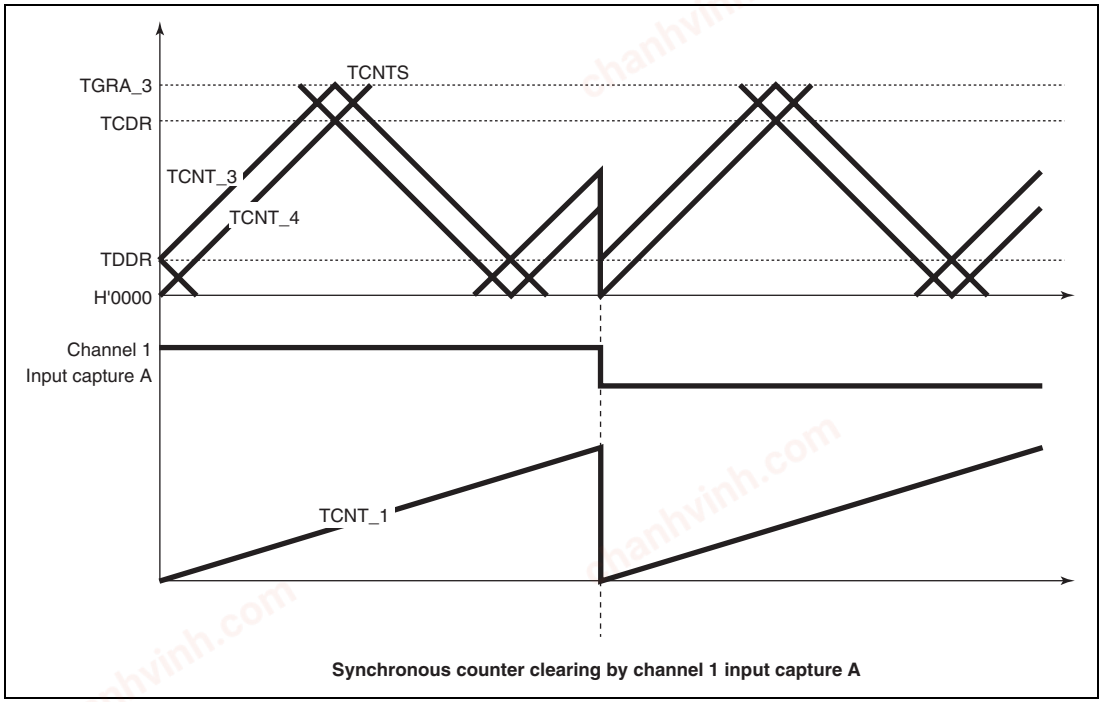

Figure 12.55 Counter Clearing Synchronized with Another Channel

chanhvinh.com

(n) Output Waveform Control at Synchronous Counter Clearing in Complementary PWM Mode

Setting the WRE bit in TWCR to 1 suppresses initial output when synchronous counter clearing occurs in the Tb interval at the trough in complementary PWM mode and controls abrupt change in duty cycle at synchronous counter clearing.

Initial output suppression is applicable only when synchronous clearing occurs in the Tb interval at the trough as indicated by (10) or (11) in figure 12.56. When synchronous clearing occurs outside that interval, the initial value specified by the OLS bits in TOCR is output. Even in the Tb interval at the trough, if synchronous clearing occurs in the initial value output period (indicated by (1) in figure 12.56) immediately after the counters start operation, initial value output is not suppressed.

When using the initial output suppression function, make sure to set compare registers TGRB_3, TGRA_4, and TGRB_4 to a value twice or more the setting of dead time data register TDDR. If synchronous clearing occurs with the compare registers set to a value less than twice the setting of TDDR, the PWM output dead time may be too short (or nonexistent) or illegal active-level PWM negative-phase output may occur during the initial output suppression interval. For details, see section 12.7.23, Notes on Output Waveform Control During Synchronous Counter Clearing in Complementary PWM Mode.

chanhvinh.com

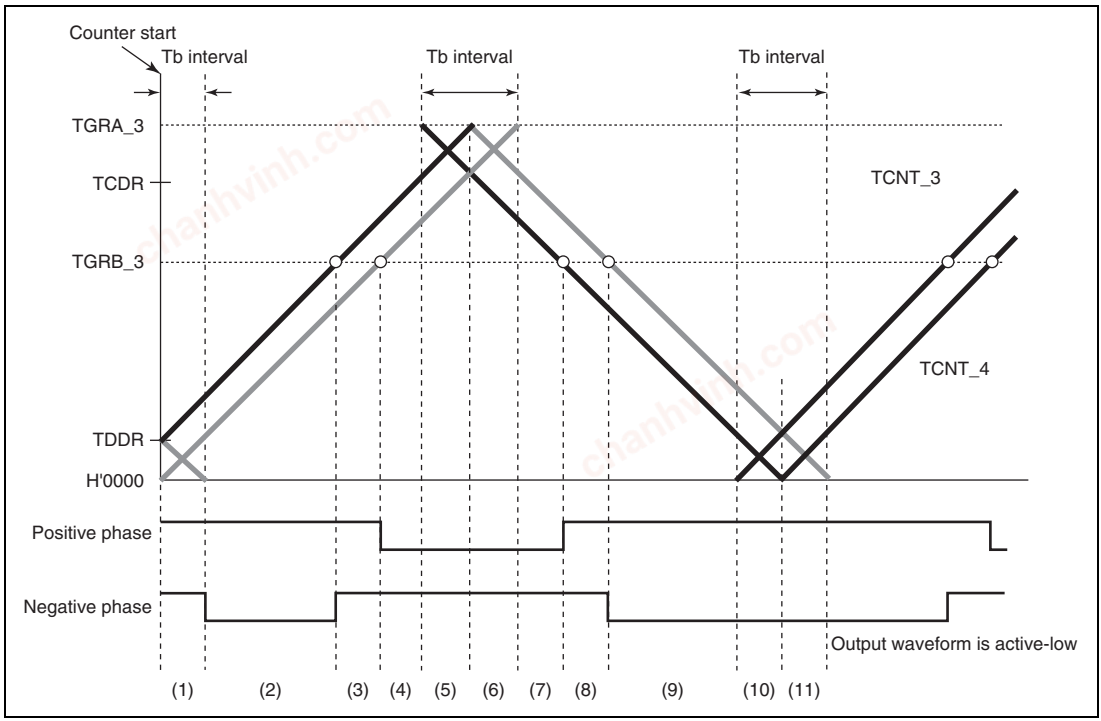

Figure 12.56 Timing for Synchronous Counter Clearing

chanhvinh.com

- Example of Procedure for Setting Output Waveform Control at Synchronous Counter Clearing in Complementary PWM Mode

  An example of the procedure for setting output waveform control at synchronous counter clearing in complementary PWM mode is shown in figure 12.57.

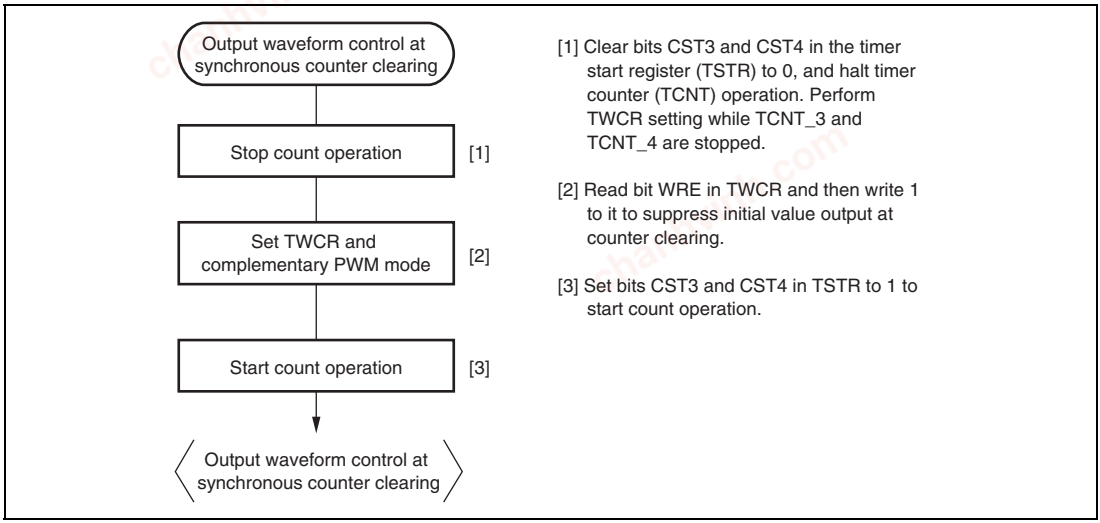

Figure 12.57 Example of Procedure for Setting Output Waveform Control at Synchronous Counter Clearing in Complementary PWM Mode

chanhvinh.com

- Examples of Output Waveform Control at Synchronous Counter Clearing in Complementary PWM Mode

  Figures 12.58 to 12.61 show examples of output waveform control in which this module operates in complementary PWM mode and synchronous counter clearing is generated while the WRE bit in TWCR is set to 1. In the examples shown in figures 12.58 to 12.61, synchronous counter clearing occurs at timing (3), (6), (8), and (11) shown in figure 12.56, respectively.

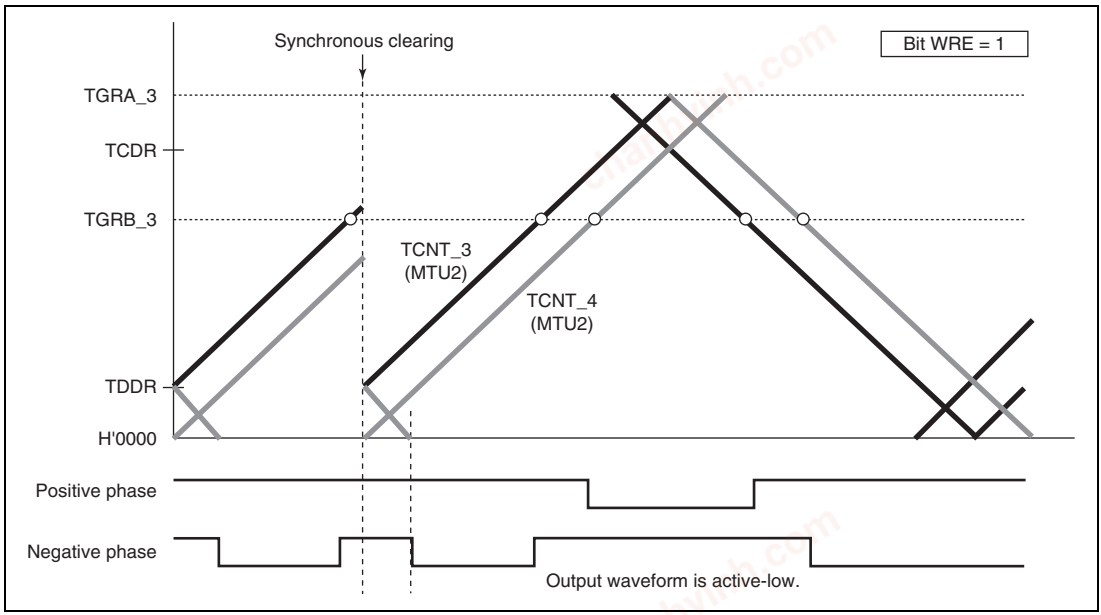

Figure 12.58 Example of Synchronous Clearing in Dead Time during Up-Counting (Timing (3) in Figure 12.56; Bit WRE of TWCR is 1)

chanhvinh.com

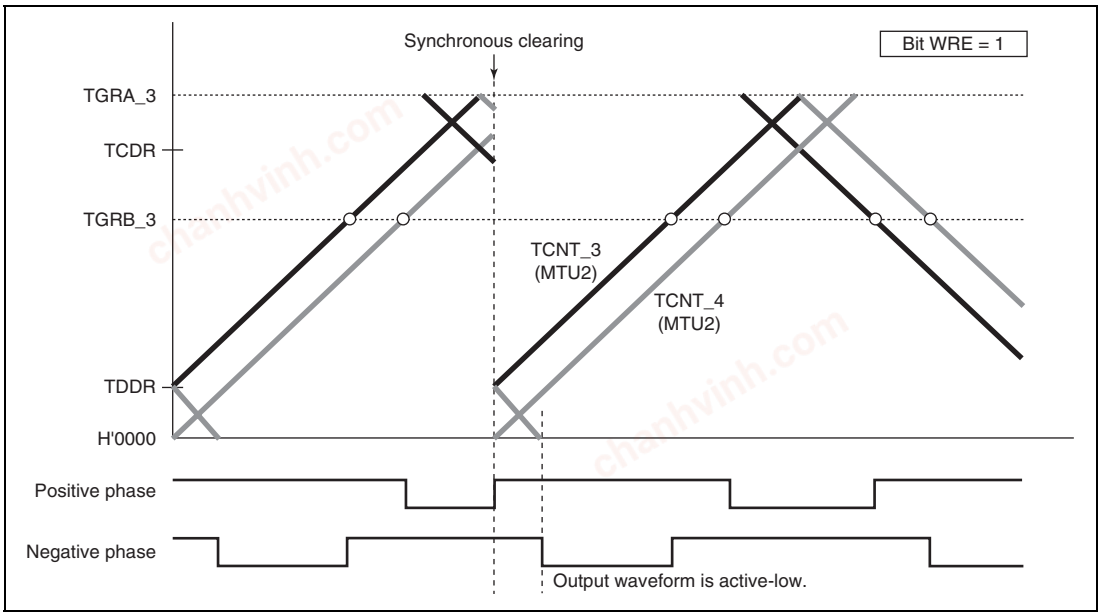

Figure 12.59 Example of Synchronous Clearing in Interval Tb at Crest (Timing (6) in Figure 12.56; Bit WRE of TWCR is 1)

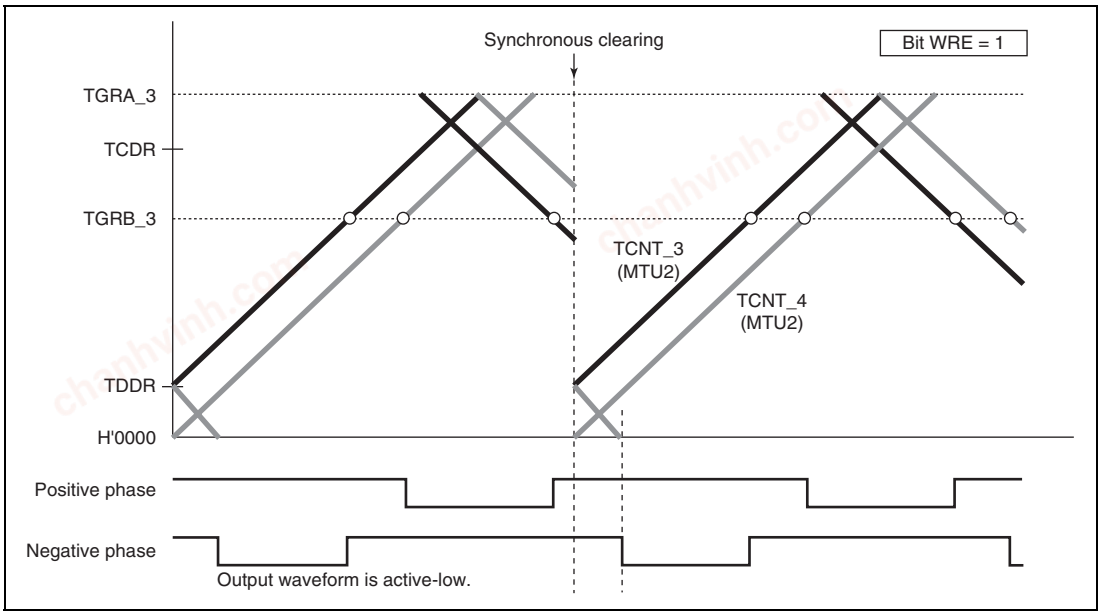

Figure 12.60 Example of Synchronous Clearing in Dead Time during Down-Counting (Timing (8) in Figure 12.56; Bit WRE of TWCR is 1)

chanhvinh.com

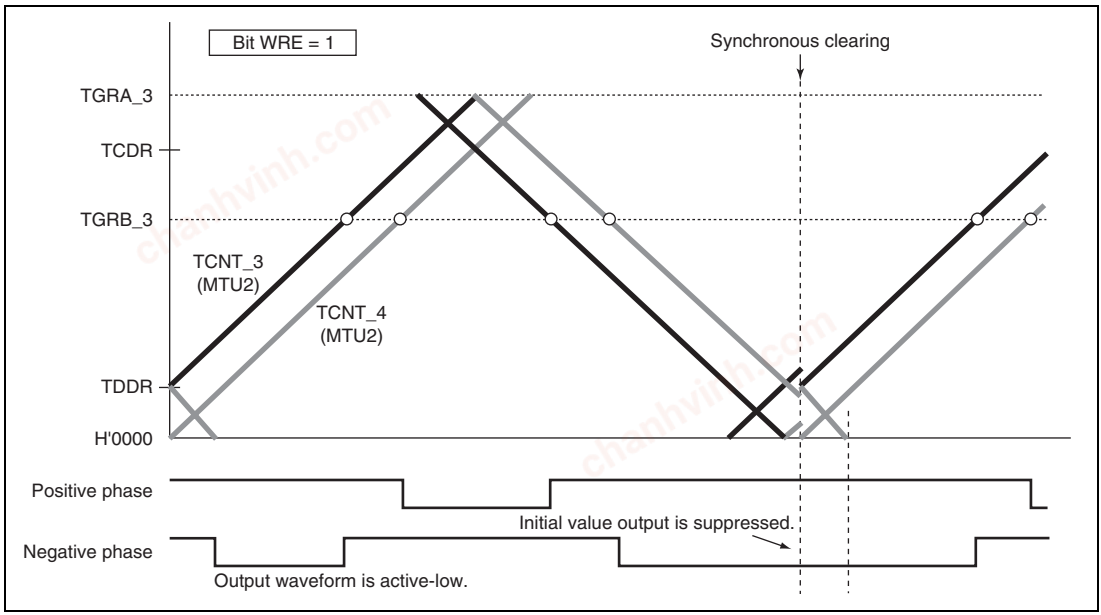

Figure 12.61 Example of Synchronous Clearing in Interval Tb at Trough (Timing (11) in Figure 12.56; Bit WRE of TWCR is 1)

chanhvinh.com

(o) Counter Clearing by TGRA_3 Compare Match

In complementary PWM mode, by setting the CCE bit in the timer waveform control register (TWCR), it is possible to have TCNT_3, TCNT_4, and TCNTS cleared by TGRA_3 compare match.

Figure 12.62 illustrates an operation example.

Notes: 1. Use this function only in complementary PWM mode 1 (transfer at crest)
2. Do not specify synchronous clearing by another channel (do not set the SYNC0 to SYNC4 bits in the timer synchronous register (TSYR) to 1).
3. Do not set the PWM duty value to H'0000.
4. Do not set the PSYE bit in timer output control register 1 (TOCR1) to 1.

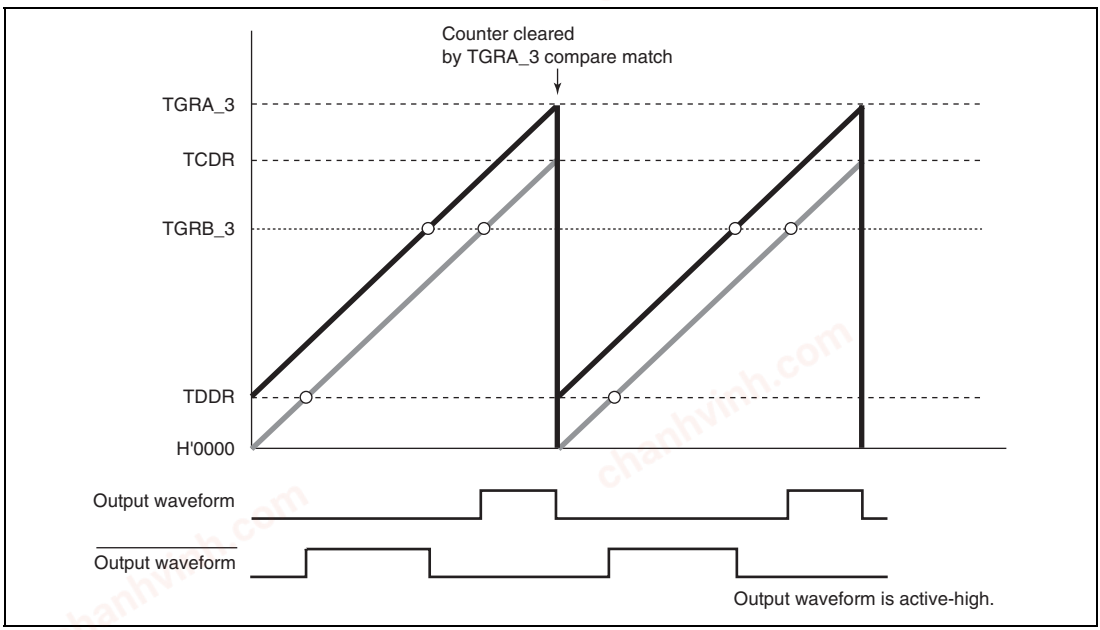

Figure 12.62 Example of Counter Clearing Operation by TGRA_3 Compare Match

chanhvinh.com

(p) Example of AC Synchronous Motor (Brushless DC Motor) Drive Waveform Output

In complementary PWM mode, a brushless DC motor can easily be controlled using the timer gate control register (TGCR). Figures 12.63 to 12.66 show examples of brushless DC motor drive waveforms created using TGCR.

When output phase switching for a 3-phase brushless DC motor is performed by means of external signals detected with a Hall element, etc., clear the FB bit in TGCR to 0. In this case, the external signals indicating the polarity position are input to channel 0 timer input pins TIOC0A, TIOC0B, and TIOC0C (set with the general I/O ports). When an edge is detected at pin TIOC0A, TIOC0B, or TIOC0C, the output on/off state is switched automatically.

When the FB bit is 1, the output on/off state is switched when the UF, VF, or WF bit in TGCR is cleared to 0 or set to 1.

The drive waveforms are output from the complementary PWM mode 6-phase output pins. With this 6-phase output, in the case of on output, it is possible to use complementary PWM mode output and perform chopping output by setting the N bit or P bit to 1. When the N bit or P bit is 0, level output is selected.

The 6-phase output active level (on output level) can be set with the OLSN and OLSP bits in the timer output control register (TOCR) regardless of the setting of the N and P bits.

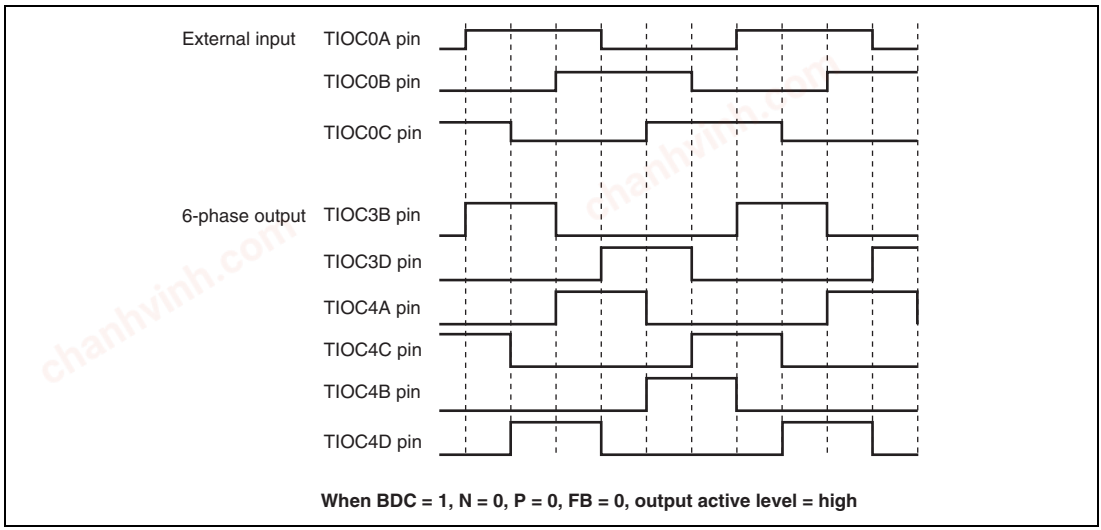

Figure 12.63 Example of Output Phase Switching by External Input (1)

chanhvinh.com

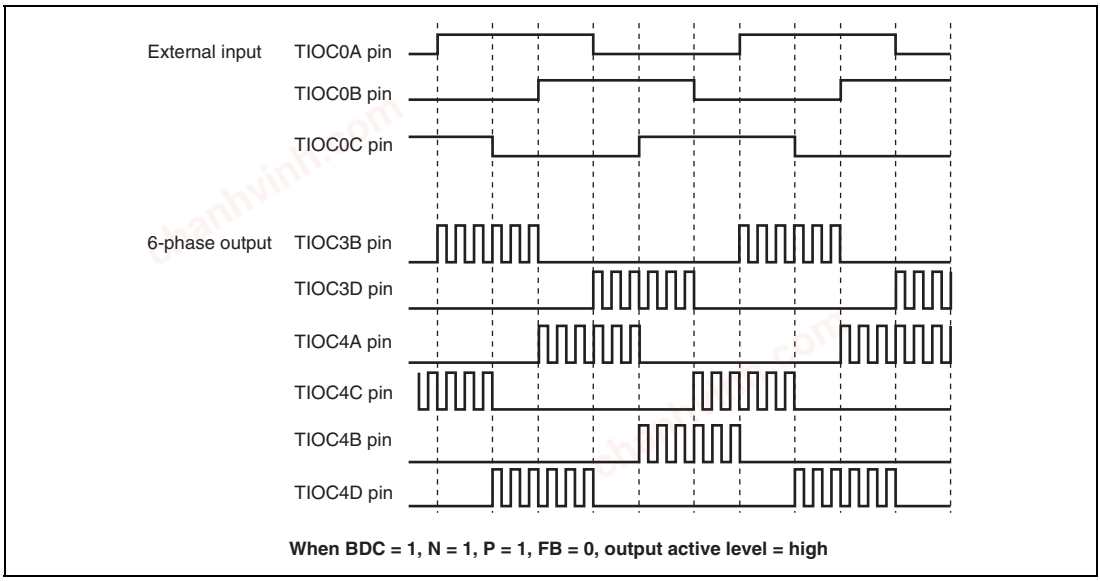

Figure 12.64 Example of Output Phase Switching by External Input (2)

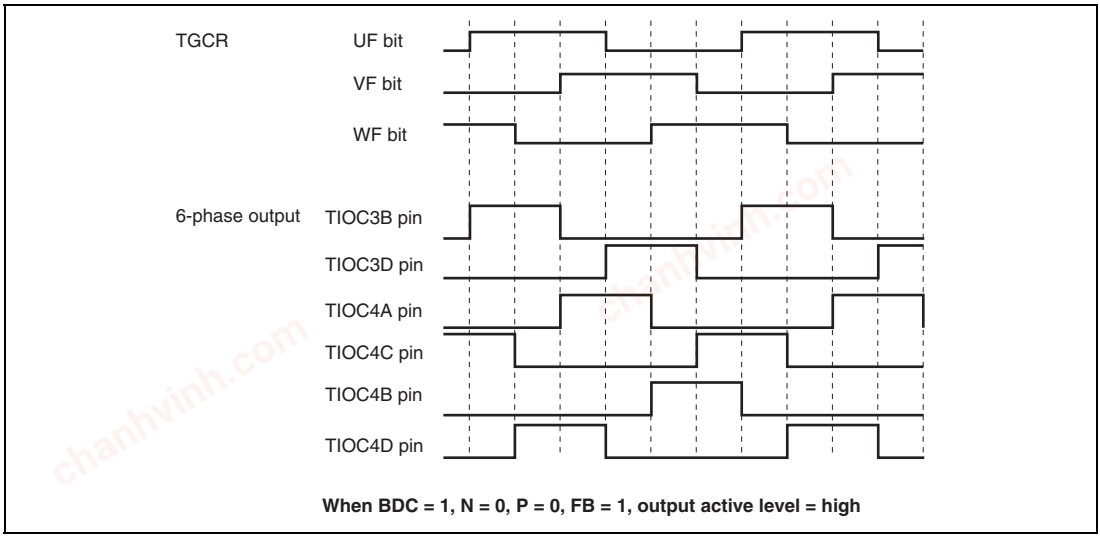

Figure 12.65 Example of Output Phase Switching by Means of UF, VF, WF Bit Settings (1)

chanhvinh.com

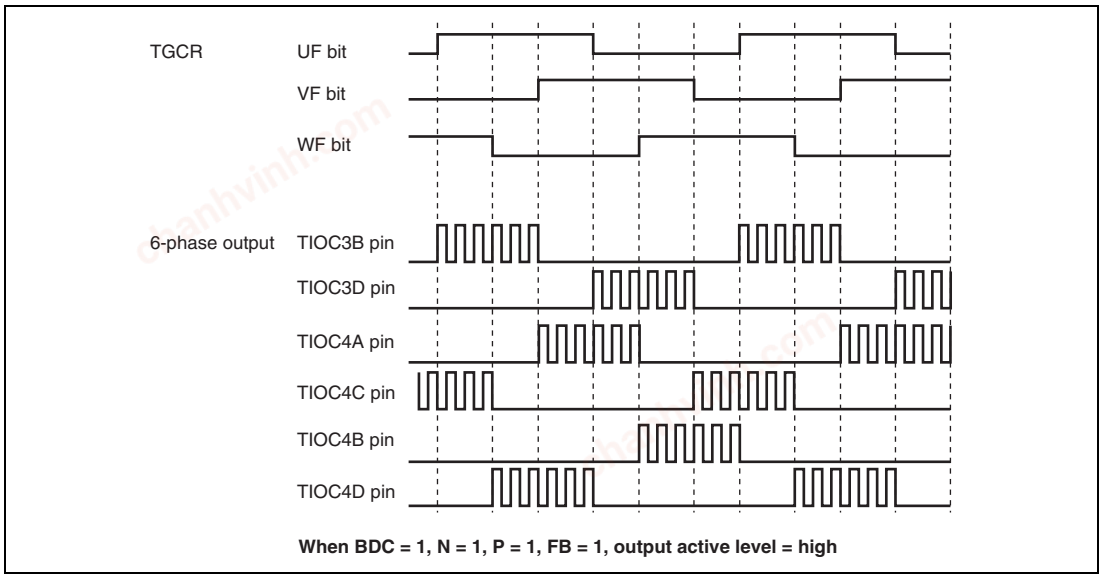

Figure 12.66 Example of Output Phase Switching by Means of UF, VF, WF Bit Settings (2)

(q) A/D Converter Start Request Setting

In complementary PWM mode, an A/D converter start request can be issued using a TGRA_3 compare-match, TCNT_4 underflow (trough), or compare-match on a channel other than channels 3 and 4.

When start requests using a TGRA_3 compare-match are specified, A/D conversion can be started at the crest of the TCNT_3 count.

A/D converter start requests can be set by setting the TTGE bit to 1 in the timer interrupt enable register (TIER). To issue an A/D converter start request at a TCNT_4 underflow (trough), set the TTGE2 bit in TIER_4 to 1.

chanhvinh.com

(3) Interrupt Skipping in Complementary PWM Mode

Interrupts TGIA_3 (at the crest) and TCIV_4 (at the trough) in channels 3 and 4 can be skipped up to seven times by making settings in the timer interrupt skipping set register (TITCR).

Transfers from a buffer register to a temporary register or a compare register can be skipped in coordination with interrupt skipping by making settings in the timer buffer transfer register (TBTER). For the linkage with buffer registers, refer to description (c), Buffer Transfer Control Linked with Interrupt Skipping, below.

A/D converter start requests generated by the A/D converter start request delaying function can also be skipped in coordination with interrupt skipping by making settings in the timer A/D converter request control register (TADCR). For the linkage with the A/D converter start request delaying function, refer to section 12.4.9, A/D Converter Start Request Delaying Function.

The setting of the timer interrupt skipping setting register (TITCR) must be done while the TGIA_3 and TCIV_4 interrupt requests are disabled by the settings of TIER_3 and TIER_4 along with under the conditions in which TGFA_3 and TCFV_4 flag settings by compare match never occur. Before changing the skipping count, be sure to clear the T3AEN and T4VEN bits to 0 to clear the skipping counter.

(a) Example of Interrupt Skipping Operation Setting Procedure

Figure 12.67 shows an example of the interrupt skipping operation setting procedure. Figure 12.68 shows the periods during which interrupt skipping count can be changed.

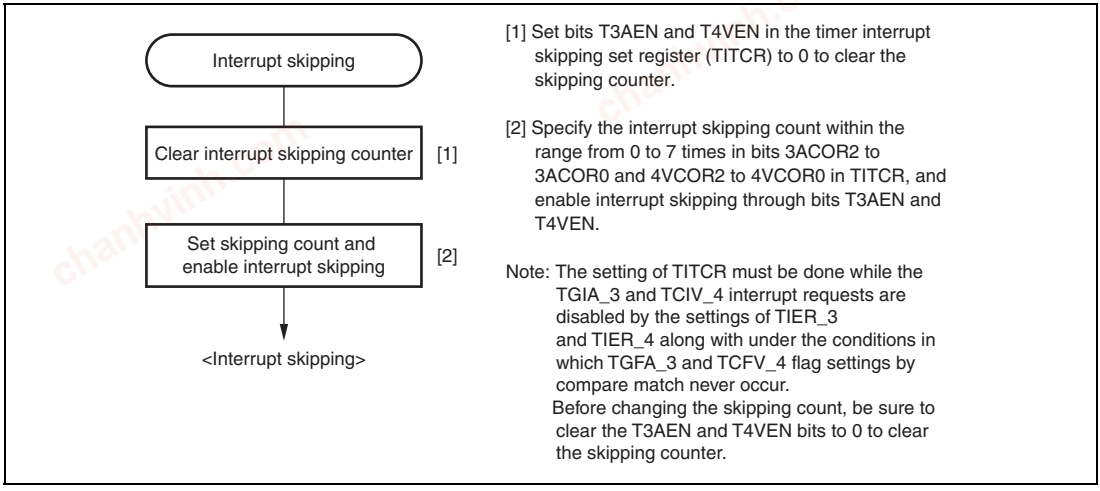

Figure 12.67 Example of Interrupt Skipping Operation Setting Procedure

chanhvinh.com

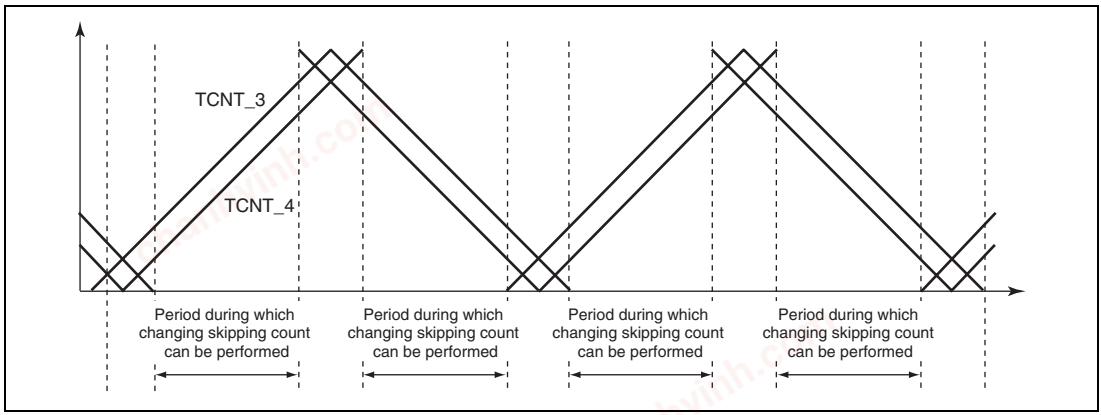

Figure 12.68 Periods during which Interrupt Skipping Count can be Changed

(b) Example of Interrupt Skipping Operation

Figure 12.69 shows an example of TGIA_3 interrupt skipping in which the interrupt skipping count is set to three by the 3ACOR bit and the T3AEN bit is set to 1 in the timer interrupt skipping set register (TITCR).

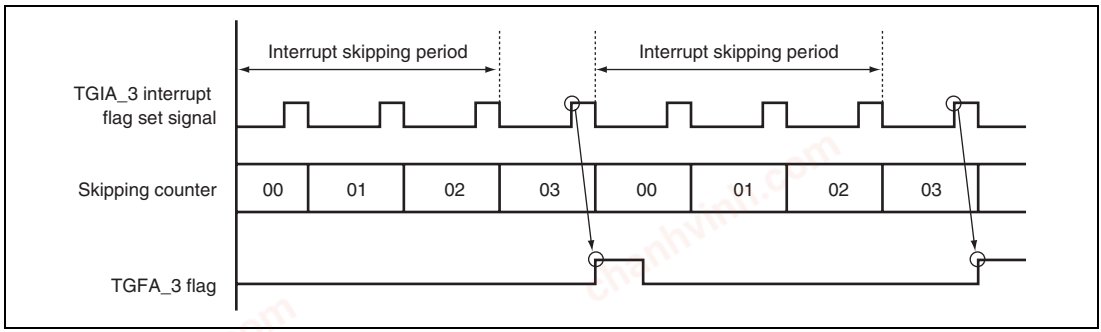

Figure 12.69 Example of Interrupt Skipping Operation

chanhvinh.com

(c) Buffer Transfer Control Linked with Interrupt Skipping

In complementary PWM mode, whether to transfer data from a buffer register to a temporary register and whether to link the transfer with interrupt skipping can be specified with the BTE1 and BTE0 bits in the timer buffer transfer set register (TBTER).

Figure 12.70 shows an example of operation when buffer transfer is suppressed (BTE1 = 0 and BTE0 = 1). While this setting is valid, data is not transferred from the buffer register to the temporary register.

Figure 12.71 shows an example of operation when buffer transfer is linked with interrupt skipping (BTE1 = 1 and BET0 = 0). While this setting is valid, data is not transferred from the buffer register to the temporary register outside the buffer transfer-enabled period. Depending on the rewrite timing from the interrupt generation to the buffer register, there are two types of the transfer timing such as from the buffer register to the temporary register and from the temporary register to the general register.

Note that the buffer transfer-enabled period depends on the T3AEN and T4VEN bit settings in the timer interrupt skipping set register (TITCR). Figure 12.72 shows the relationship between the T3AEN and T4VEN bit settings in TITCR and buffer transfer-enabled period.

Note: This function must always be used in combination with interrupt skipping.
When interrupt skipping is disabled (the T3AEN and T4VEN bits in the timer interrupt skipping set register (TITCR) are cleared to 0 or the skipping count set bits (3ACOR and 4VCOR) in TITCR are cleared to 0), make sure that buffer transfer is not linked with interrupt skipping (clear the BTE1 bit in the timer buffer transfer set register (TBTER) to 0). If buffer transfer is linked with interrupt skipping while interrupt skipping is disabled, buffer transfer is never performed.

chanhvinh.com

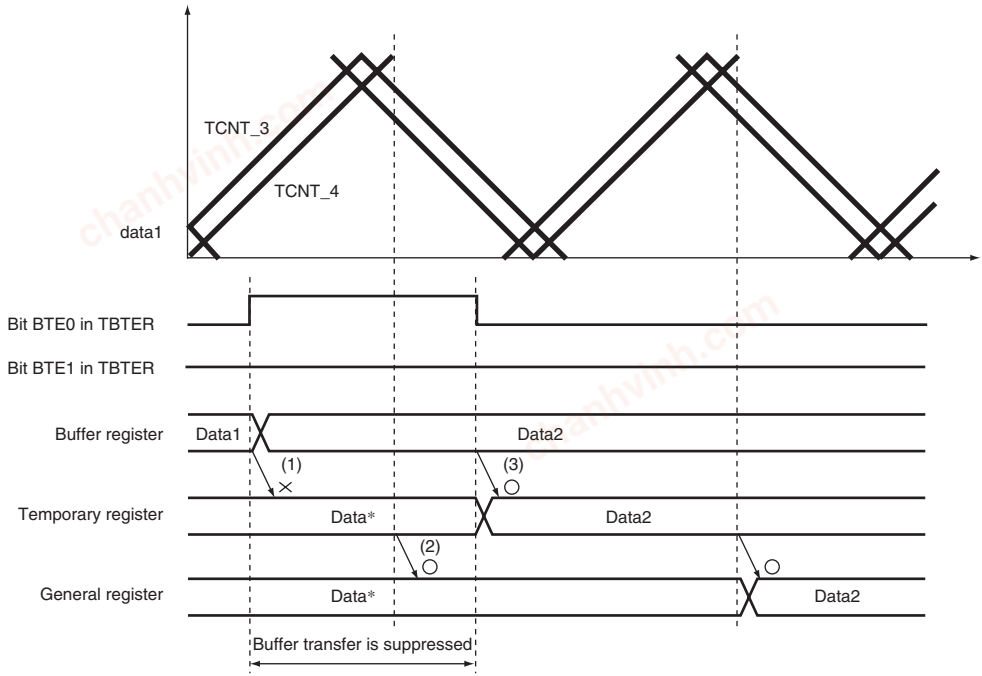

[Legend]

(1) No data is transferred from the buffer register to the temporary register in the buffer transfer-disabled period (bits BTE1 and BTE0 in TBTER are set to 0 and 1, respectively).

(2) Data is transferred from the temporary register to the general register even in the buffer transfer-disabled period.

(3) After buffer transfer is enabled, data is transferred from the buffer register to the temporary register.

Note: * When buffer transfer at the crest is selected.

Figure 12.70 Example of Operation when Buffer Transfer is Suppressed (BTE1 = 0 and BTE0 = 1)

chanhvinh.com

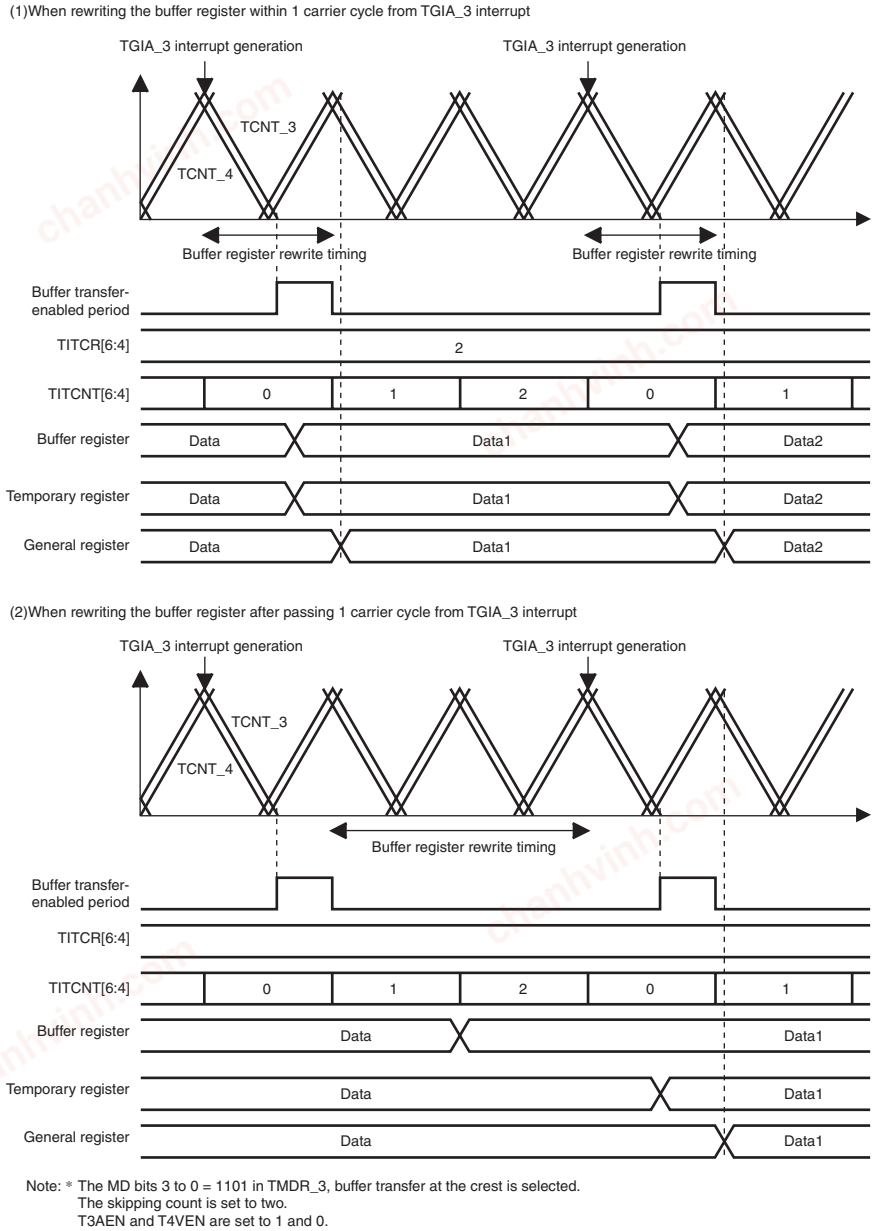

Note: * The MD bits 3 to 0 = 1101 in TMDR_3, buffer transfer at the crest is selected.
The skipping count is set to two.
T3AEN and T4VEN are set to 1 and 0.

Figure 12.71 Example of Operation when Buffer Transfer is Linked with Interrupt Skipping (BTE1 = 1 and BTE0 = 0)

chanhvinh.com

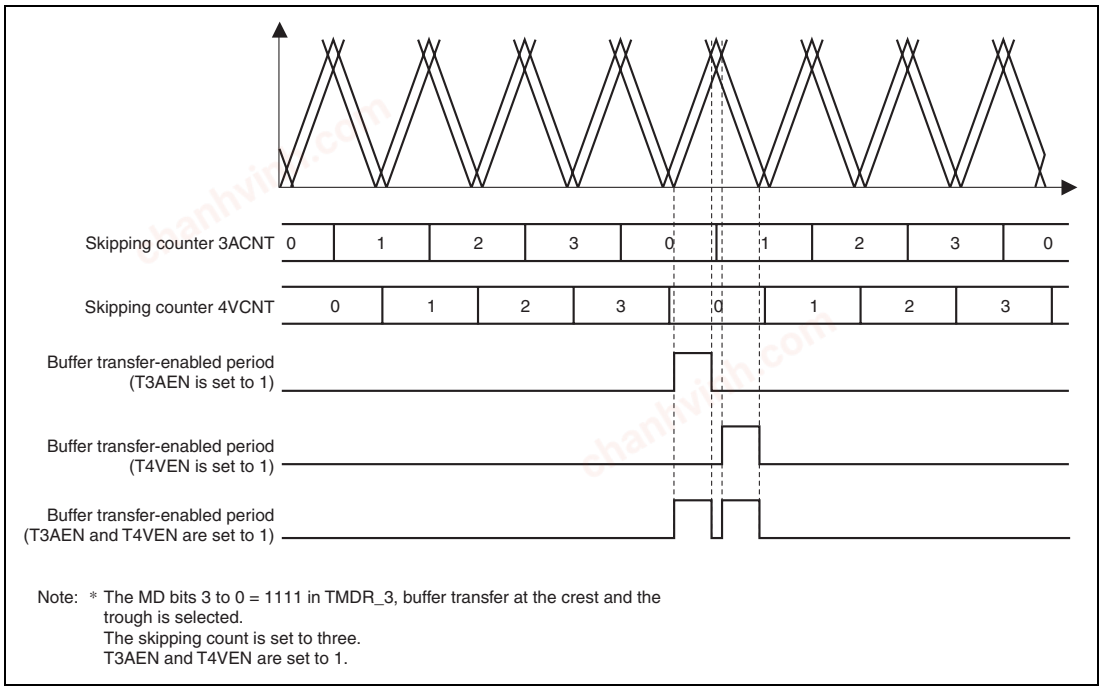

Figure 12.72 Relationship between Bits T3AEN and T4VEN in TITCR and Buffer Transfer-Enabled Period

(4) Complementary PWM Mode Output Protection Function

Complementary PWM mode output has the following protection function.

(a) Register and counter miswrite prevention function

With the exception of the buffer registers, which can be rewritten at any time, access by the CPU can be enabled or disabled for the mode registers, control registers, compare registers, and counters used in complementary PWM mode by means of the RWE bit in the timer read/write enable register (TRWER). The applicable registers are some (21 in total) of the registers in channels 3 and 4 shown in the following:

- TCR_3 and TCR_4, TMDR_3 and TMDR_4, TIORH_3 and TIORH_4, TIORL_3 and TIORL_4, TIER_3 and TIER_4, TCNT_3 and TCNT_4, TGRA_3 and TGRA_4, TGRB_3 and TGRB_4, TOER, TOCR, TGCR, TCDR, and TDDR.

This function enables miswriting due to CPU runaway to be prevented by disabling CPU access to the mode registers, control registers, and counters. When the applicable registers are read in the access-disabled state, undefined values are returned. Writing to these registers is ignored.

chanhvinh.com

12.4.9 A/D Converter Start Request Delaying Function

A/D converter start requests can be issued in channel 4 by making settings in the timer A/D converter start request control register (TADCR), timer A/D converter start request cycle set registers (TADCORA_4 and TADCORB_4), and timer A/D converter start request cycle set buffer registers (TADCOBRA_4 and TADCOBRB_4).

The A/D converter start request delaying function compares TCNT_4 with TADCORA_4 or TADCORB_4, and when their values match, the function issues a respective A/D converter start request (TRG4AN or TRG4BN).

A/D converter start requests (TRG4AN and TRG4BN) can be skipped in coordination with interrupt skipping by setting the ITA3AE, ITA4VE, ITB3AE, and ITB4VE bits in TADCR.

- Example of Procedure for Specifying A/D Converter Start Request Delaying Function

  Figure 12.73 shows an example of procedure for specifying the A/D converter start request delaying function.

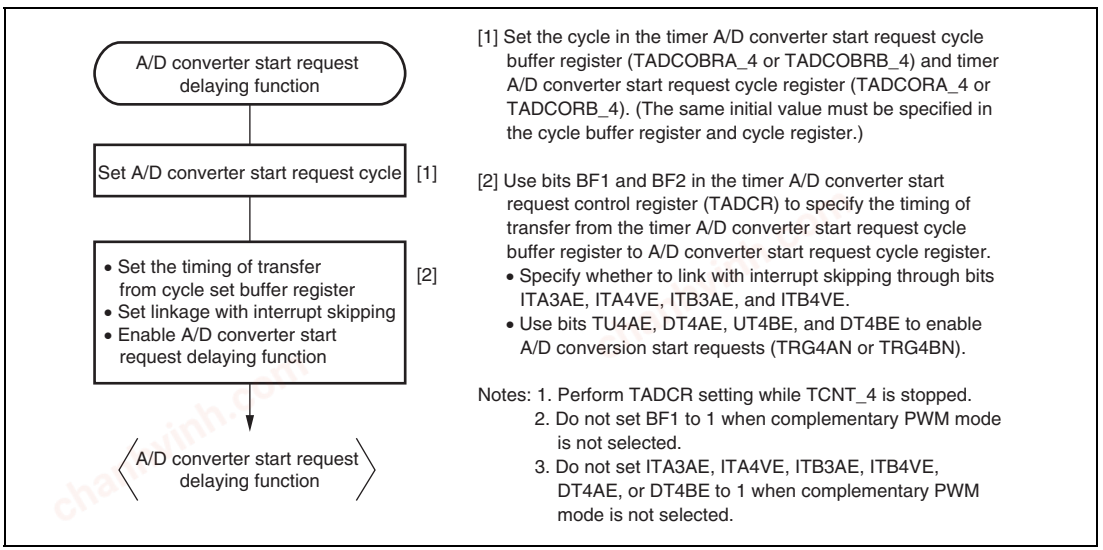

Figure 12.73 Example of Procedure for Specifying A/D Converter Start Request Delaying Function

chanhvinh.com

- Basic Operation Example of A/D Converter Start Request Delaying Function

  Figure 12.74 shows a basic example of A/D converter request signal (TRG4AN) operation when the trough of TCNT_4 is specified for the buffer transfer timing and an A/D converter start request signal is output during TCNT_4 down-counting.

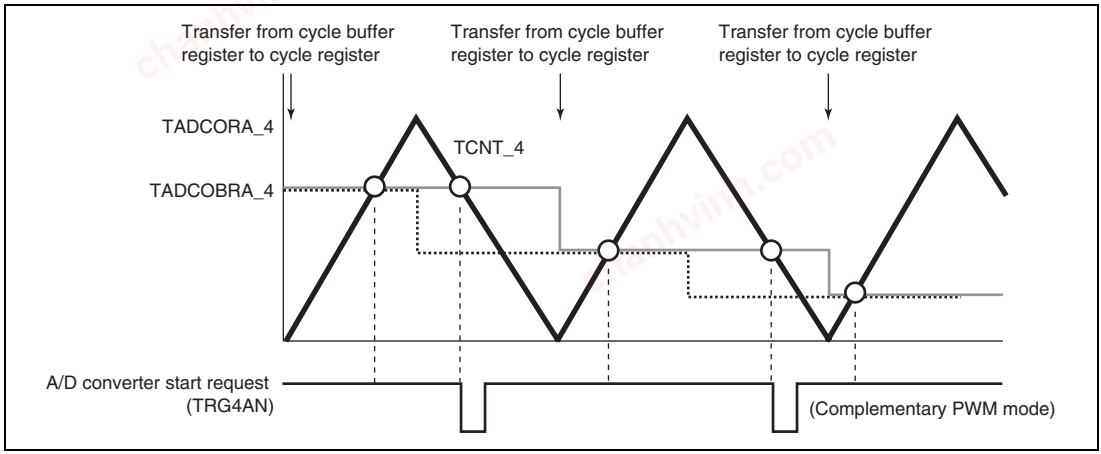

Figure 12.74 Basic Example of A/D Converter Start Request Signal (TRG4AN) Operation

- Buffer Transfer

  The data in the timer A/D converter start request cycle set registers (TADCORA_4 and TADCORB_4) is updated by writing data to the timer A/D converter start request cycle set buffer registers (TADCOBRA_4 and TADCOBRB_4). Data is transferred from the buffer registers to the respective cycle set registers at the timing selected with the BF1 and BF0 bits in the timer A/D converter start request control register (TADCR_4).

- A/D Converter Start Request Delaying Function Linked with Interrupt Skipping

  A/D converter start requests (TRG4AN and TRG4BN) can be issued in coordination with interrupt skipping by making settings in the ITA3AE, ITA4VE, ITB3AE, and ITB4VE bits in the timer A/D converter start request control register (TADCR).

  Figure 12.75 shows an example of A/D converter start request signal (TRG4AN) operation when TRG4AN output is enabled during TCNT_4 up counting and down counting and A/D converter start requests are linked with interrupt skipping.

  Figure 12.76 shows another example of A/D converter start request signal (TRG4AN) operation when TRG4AN output is enabled during TCNT_4 up counting and A/D converter start requests are linked with interrupt skipping.

chanhvinh.com

Note: This function must be used in combination with interrupt skipping.
When interrupt skipping is disabled (the T3AEN and T4VEN bits in the timer interrupt skipping set register (TITCR) are cleared to 0 or the skipping count set bits (3ACOR and 4VCOR) in TITCR are cleared to 0), make sure that A/D converter start requests are not linked with interrupt skipping (clear the ITA3AE, ITA4VE, ITB3AE, and ITB4VE bits in the timer A/D converter start request control register (TADCR) to 0).

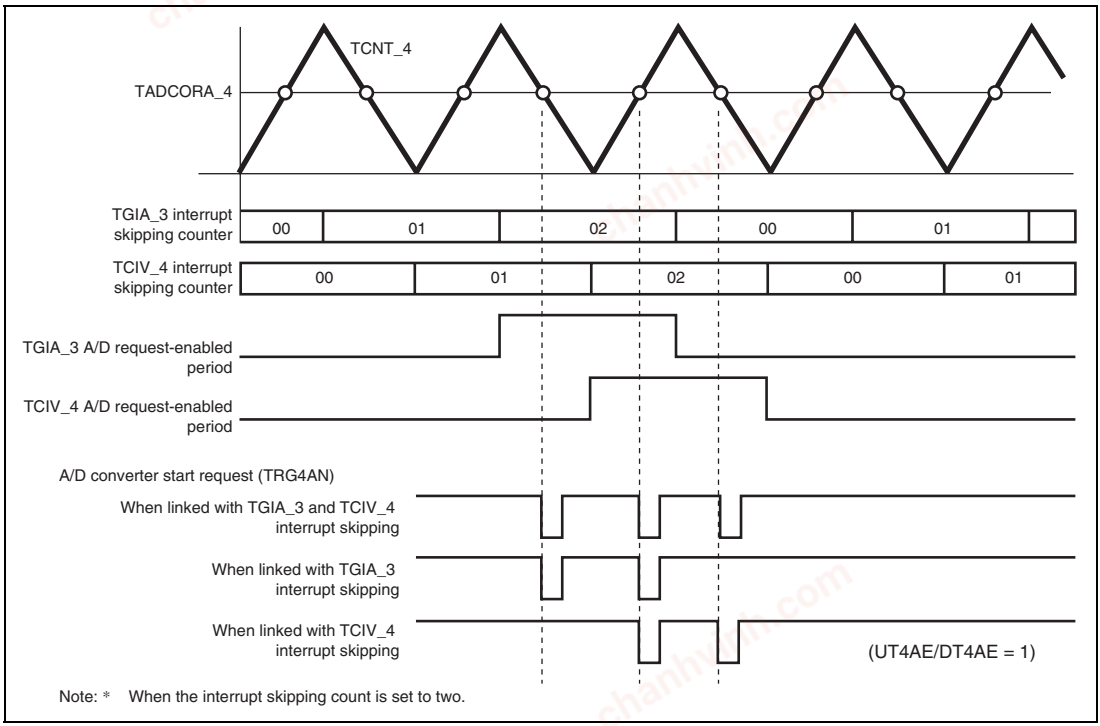

Figure 12.75 Example of A/D Converter Start Request Signal (TRG4AN) Operation Linked with Interrupt Skipping

chanhvinh.com

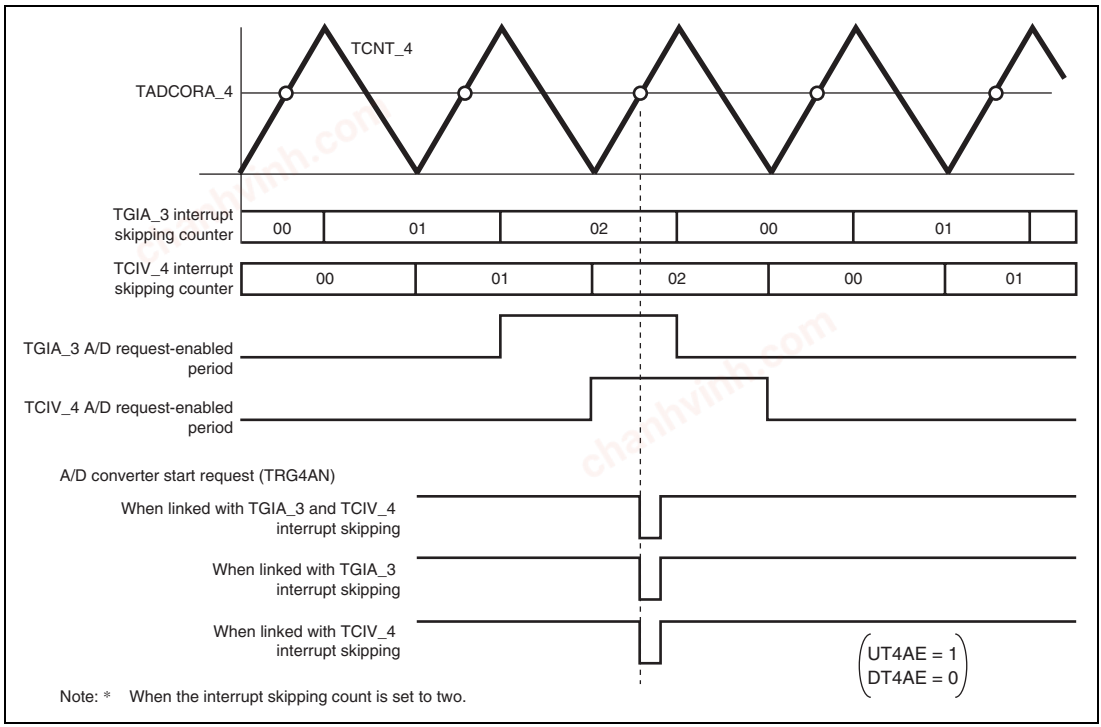

Figure 12.76 Example of A/D Converter Start Request Signal (TRG4AN) Operation Linked with Interrupt Skipping

chanhvinh.com

12.4.10 TCNT Capture at Crest and/or Trough in Complementary PWM Operation

The TCNT value is captured in TGR at either the crest or trough or at both the crest and trough during complementary PWM operation. The timing for capturing in TGR can be selected by TIOR.

Figure 12.77 shows an example in which TCNT is used as a free-running counter without being cleared, and the TCNT value is captured in TGR at the specified timing (either crest or trough, or both crest and trough).

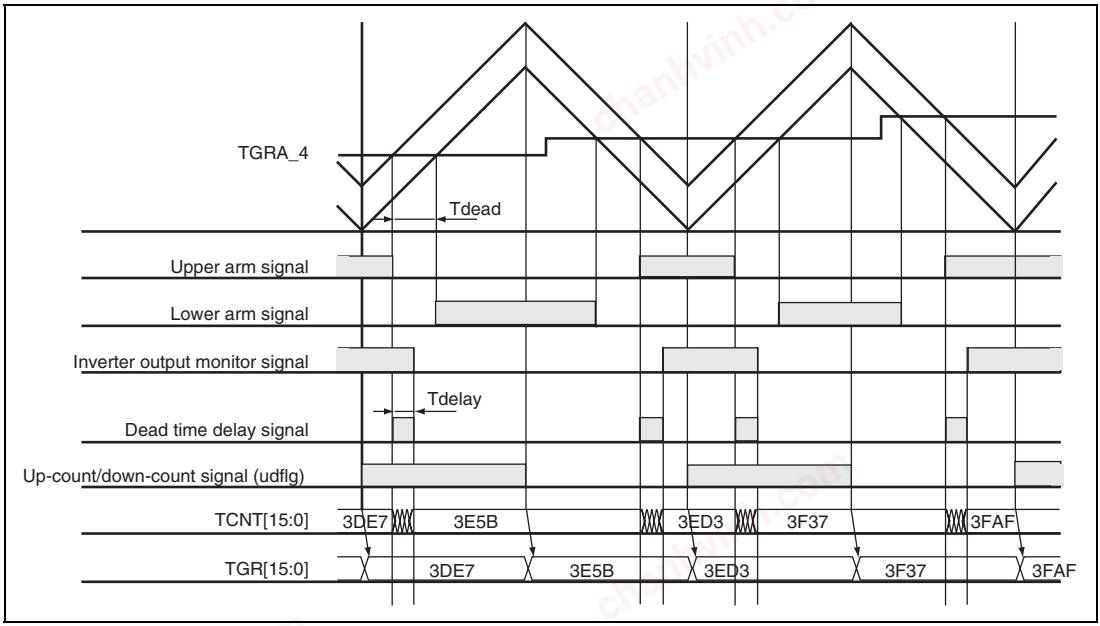

Figure 12.77 TCNT Capturing at Crest and/or Trough in Complementary PWM Operation

chanhvinh.com

12.5 Interrupt Sources

12.5.1 Interrupt Sources and Priorities

This module has three kinds of interrupt sources; TGR input capture/compare match, TCNT overflow, and TCNT underflow. Each interrupt source has its own status flag and enable/disabled bit, allowing the generation of interrupt request signals to be enabled or disabled individually.

When an interrupt request is generated, the corresponding status flag in TSR is set to 1. If the corresponding enable/disable bit in TIER is set to 1 at this time, an interrupt is requested. The interrupt request is cleared by clearing the status flag to 0.

Relative channel priorities can be changed by the interrupt controller, however the priority order within a channel is fixed. For details, see section 7, Interrupt Controller.

Table 12.55 lists the interrupt sources of this module.

Table 12.55 Interrupts of Multi-Function Timer Pulse Unit 2

Channel	Name	Interrupt Source	Interrupt Flag	Activation of Direct Memory Access Controller	Priority
0	TGIA_0	TGRA_0 input capture/compare match	TGFA_0	Possible	High
	TGIB_0	TGRB_0 input capture/compare match	TGFB_0	Not possible	
	TGIC_0	TGRC_0 input capture/compare match	TGFC_0	Not possible	
	TGID_0	TGRD_0 input capture/compare match	TGFD_0	Not possible	
	TCIV_0	TCNT_0 overflow	TCFV_0	Not possible	
	TGIE_0	TGRE_0 compare match	TGFE_0	Not possible	
	TGIF_0	TGRF_0 compare match	TGFF_0	Not possible	
1	TGIA_1	TGRA_1 input capture/compare match	TGFA_1	Possible	
	TGIB_1	TGRB_1 input capture/compare match	TGFB_1	Not possible	
	TCIV_1	TCNT_1 overflow	TCFV_1	Not possible	
	TCIU_1	TCNT_1 underflow	TCFU_1	Not possible	Low

chanhvinh.com

Channel	Name	Interrupt Source	Interrupt Flag	Activation of Direct Memory Access Controller	Priority
2	TGIA_2	TGRA_2 input capture/compare match	TGFA_2	Possible	High
	TGIB_2	TGRB_2 input capture/compare match	TGFB_2	Not possible	
	TCIV_2	TCNT_2 overflow	TCFV_2	Not possible	
	TCIU_2	TCNT_2 underflow	TCFU_2	Not possible	
3	TGIA_3	TGRA_3 input capture/compare match	TGFA_3	Possible	
	TGIB_3	TGRB_3 input capture/compare match	TGFB_3	Not possible	
	TGIC_3	TGRC_3 input capture/compare match	TGFC_3	Not possible	
	TGID_3	TGRD_3 input capture/compare match	TGFD_3	Not possible	
	TCIV_3	TCNT_3 overflow	TCFV_3	Not possible	
4	TGIA_4	TGRA_4 input capture/compare match	TGFA_4	Possible	
	TGIB_4	TGRB_4 input capture/compare match	TGFB_4	Not possible	
	TGIC_4	TGRC_4 input capture/compare match	TGFC_4	Not possible	
	TGID_4	TGRD_4 input capture/compare match	TGFD_4	Not possible	
	TCIV_4	TCNT_4 overflow/underflow	TCFV_4	Not possible	Low

Note: This table shows the initial state immediately after a reset. The relative channel priorities can be changed by the interrupt controller.

(1) Input Capture/Compare Match Interrupt

An interrupt is requested if the TGIE bit in TIER is set to 1 when the TGF flag in TSR is set to 1 by the occurrence of a TGR input capture/compare match on a particular channel. The interrupt request is cleared by clearing the TGF flag to 0. This module has eighteen input capture/compare match interrupts, six for channel 0, four each for channels 3 and 4, and two each for channels 1 and 2. The TGFE_0 and TGFF_0 flags in channel 0 are not set by the occurrence of an input capture.

(2) Overflow Interrupt

An interrupt is requested if the TCIEV bit in TIER is set to 1 when the TCFV flag in TSR is set to 1 by the occurrence of TCNT overflow on a channel. The interrupt request is cleared by clearing the TCFV flag to 0. This module has five overflow interrupts, one for each channel.

chanhvinh.com

(3) Underflow Interrupt

An interrupt is requested if the TCIEU bit in TIER is set to 1 when the TCFU flag in TSR is set to 1 by the occurrence of TCNT underflow on a channel. The interrupt request is cleared by clearing the TCFU flag to 0. This module has two underflow interrupts, one each for channels 1 and 2.

12.5.2 Activation of Direct Memory Access Controller

The direct memory access controller can be activated by the TGRA input capture/compare match interrupt in each channel. For details, see section 11, Direct Memory Access Controller.

In this module, a total of five TGRA input capture/compare match interrupts can be used as direct memory access controller activation sources, one each for channels 0 to 4.

12.5.3 A/D Converter Activation

The A/D converter can be activated by one of the following three methods in this module. Table 12.56 shows the relationship between interrupt sources and A/D converter start request signals.

(1) A/D Converter Activation by TGRA Input Capture/Compare Match or at TCNT_4 Trough in Complementary PWM Mode

The A/D converter can be activated by the occurrence of a TGRA input capture/compare match in each channel. In addition, if complementary PWM operation is performed while the TTGE2 bit in TIER_4 is set to 1, the A/D converter can be activated at the trough of TCNT_4 count (TCNT_4 = H'0000).

A/D converter start request signal TRGAN is issued to the A/D converter under either one of the following conditions.

- When the TGFA flag in TSR is set to 1 by the occurrence of a TGRA input capture/compare match on a particular channel while the TTGE bit in TIER is set to 1
- When the TCNT_4 count reaches the trough (TCNT_4 = H'0000) during complementary PWM operation while the TTGE2 bit in TIER_4 is set to 1

When either condition is satisfied, if A/D converter start signal TRGAN from this module is selected as the trigger in the A/D converter, A/D conversion will start.

chanhvinh.com

(2) A/D Converter Activation by Compare Match between TCNT_0 and TGRE_0

The A/D converter can be activated by generating A/D converter start request signal TRG0N when a compare match occurs between TCNT_0 and TGRE_0 in channel 0.

When the TGFE flag in TSR2_0 is set to 1 by the occurrence of a compare match between TCNT_0 and TGRE_0 in channel 0 while the TTGE2 bit in TIER2_0 is set to 1, A/D converter start request TGR0N is issued to the A/D converter. If A/D converter start signal TGR0N from this module is selected as the trigger in the A/D converter, A/D conversion will start.

(3) A/D Converter Activation by A/D Converter Start Request Delaying Function

The A/D converter can be activated by generating A/D converter start request signal TRG4AN or TRG4BN when the TCNT_4 count matches the TADCORA or TADCORB value if the UT4AE, DT4AE, UT4BE, or DT4BE bit in the A/D converter start request control register (TADCR) is set to 1. For details, refer to section 12.4.9, A/D Converter Start Request Delaying Function.

A/D conversion will start if A/D converter start signal TRG4AN from this module is selected as the trigger in the A/D converter when TRG4AN is generated or if TRG4BN from this module is selected as the trigger in the A/D converter when TRG4BN is generated.

Table 12.56 Interrupt Sources and A/D Converter Start Request Signals

Target Registers	Interrupt Source	A/D Converter Start Request Signal
TGRA_0 and TCNT_0	Input capture/compare match	TRGAN
TGRA_1 and TCNT_1		
TGRA_2 and TCNT_2		
TGRA_3 and TCNT_3		
TGRA_4 and TCNT_4		
TCNT_4	TCNT_4 Trough in complementary PWM mode	
TGRE_0 and TCNT_0	Compare match	TRG0N
TADCORA and TCNT_4		TRG4AN
TADCORB and TCNT_4		TRG4BN

chanhvinh.com

12.6 Operation Timing

12.6.1 Input/Output Timing

(1) TCNT Count Timing

Figure 12.78 shows TCNT count timing in internal clock operation, and Figure 12.79 shows TCNT count timing in external clock operation (normal mode), and Figure 12.80 shows TCNT count timing in external clock operation (phase counting mode).

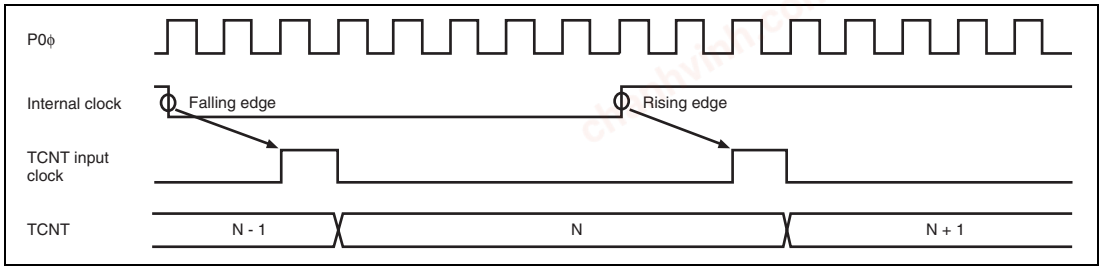

Figure 12.78 Count Timing in Internal Clock Operation

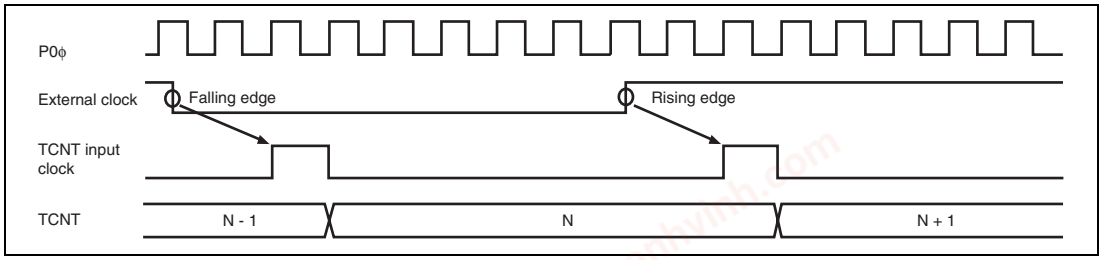

Figure 12.79 Count Timing in External Clock Operation

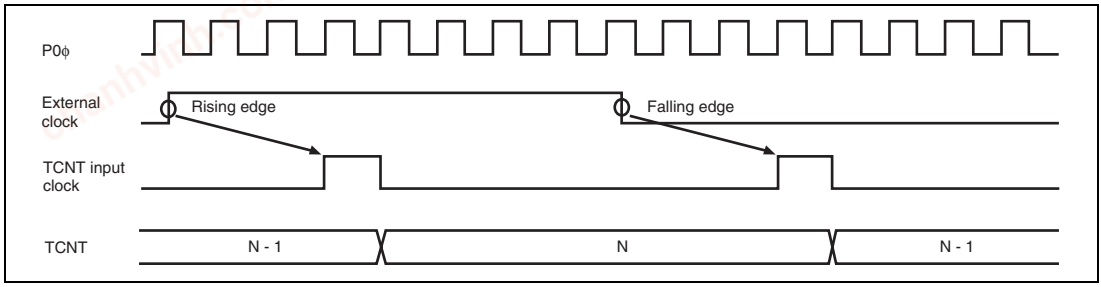

Figure 12.80 Count Timing in External Clock Operation (Phase Counting Mode)

(2) Output Compare Output Timing

chanhvinh.com

A compare match signal is generated in the final state in which TCNT and TGR match (the point at which the count value matched by TCNT is updated). When a compare match signal is generated, the output value set in TIOR is output at the output compare output pin (TIOC pin). After a match between TCNT and TGR, the compare match signal is not generated until the TCNT input clock is generated.

Figure 12.81 shows output compare output timing (normal mode and PWM mode) and Figure 12.82 shows output compare output timing (complementary PWM mode and reset synchronous PWM mode).

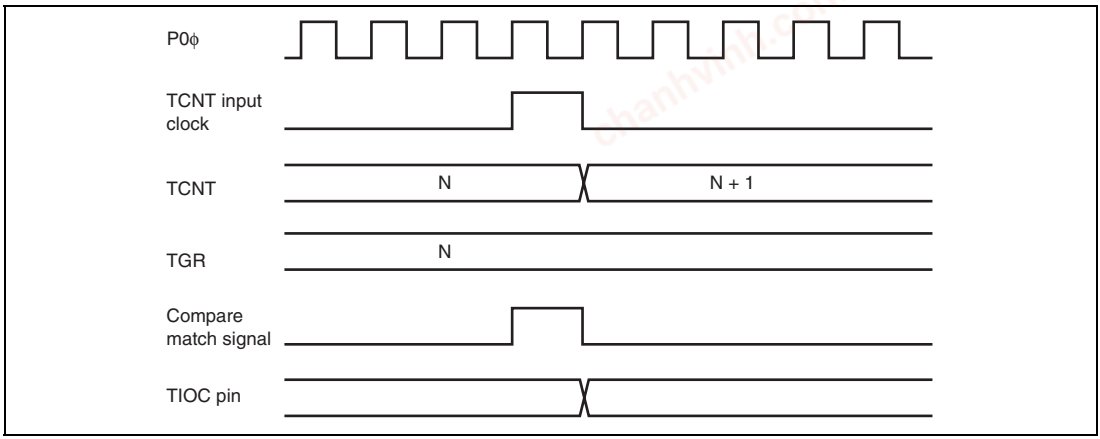

Figure 12.81 Output Compare Output Timing (Normal Mode/PWM Mode)

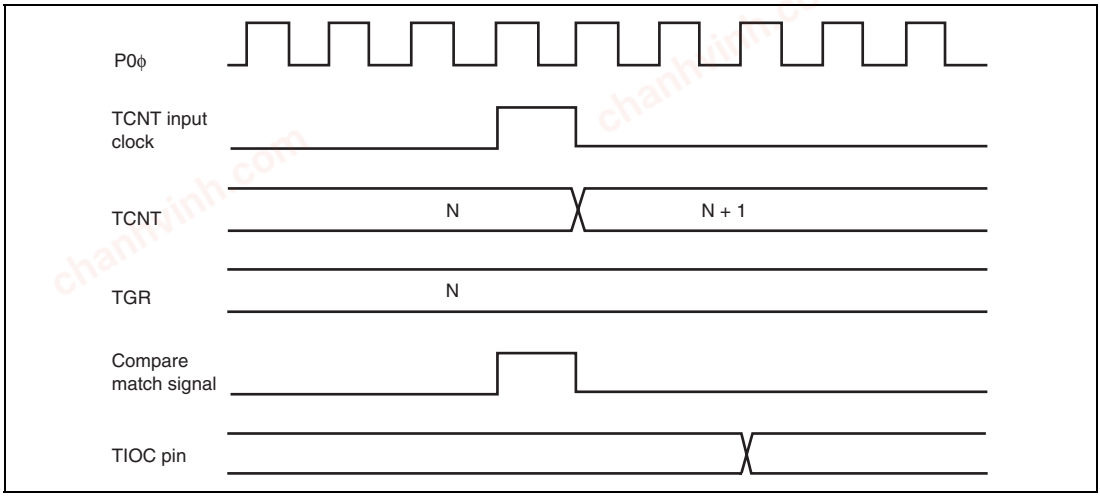

Figure 12.82 Output Compare Output Timing (Complementary PWM Mode/Reset Synchronous PWM Mode)

chanhvinh.com

(3) Input Capture Signal Timing

Figure 12.83 shows input capture signal timing.

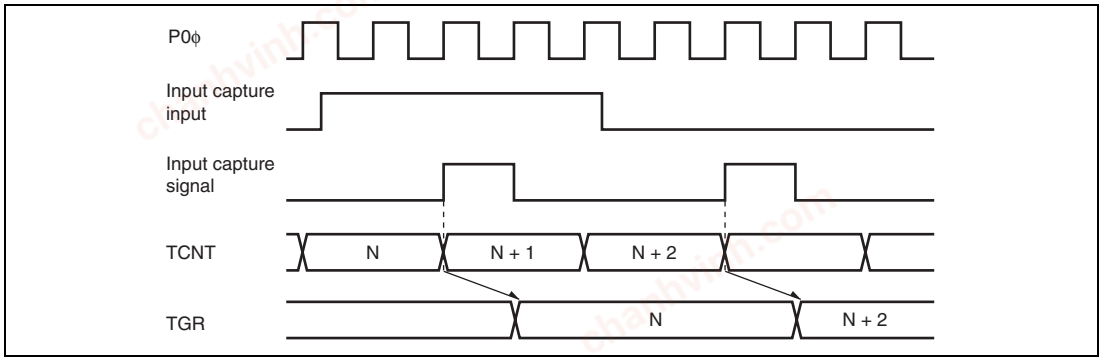

Figure 12.83 Input Capture Input Signal Timing

chanhvinh.com

(4) Timing for Counter Clearing by Compare Match/Input Capture

Figure 12.84 shows the timing when counter clearing on compare match is specified, and Figure 12.85 shows the timing when counter clearing on input capture is specified.

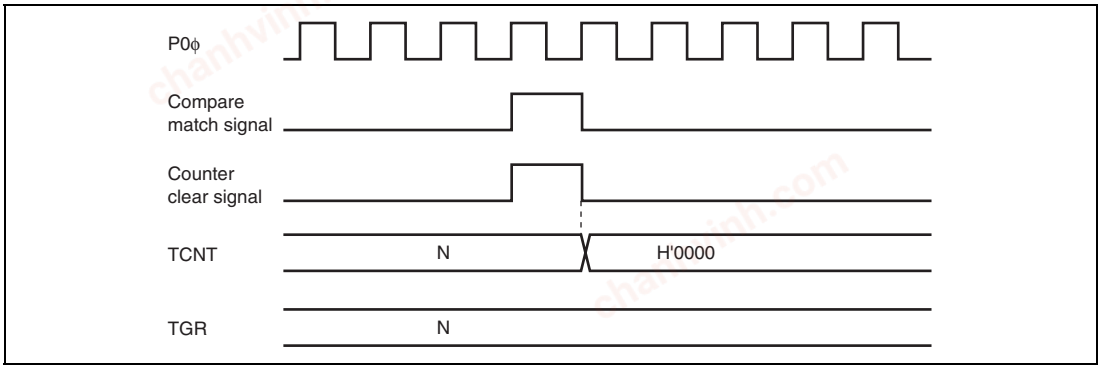

Figure 12.84 Counter Clear Timing (Compare Match)

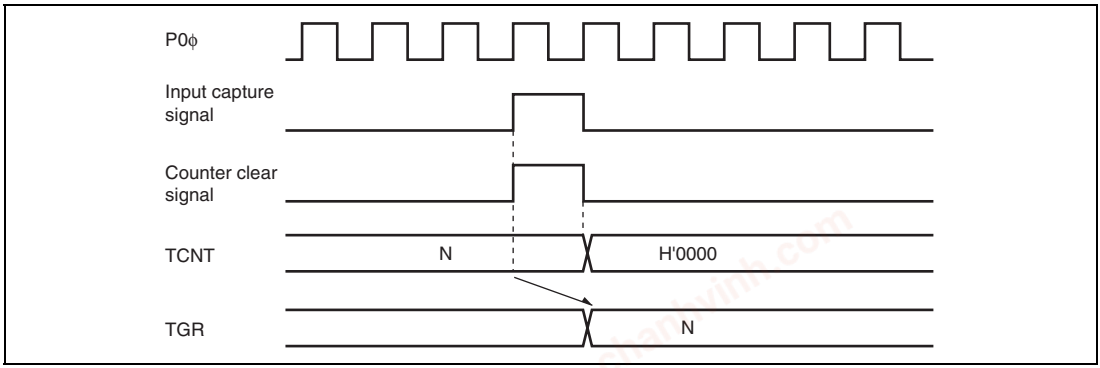

Figure 12.85 Counter Clear Timing (Input Capture)

chanhvinh.com

(5) Buffer Operation Timing

Figures 12.86 to 12.88 show the timing in buffer operation.

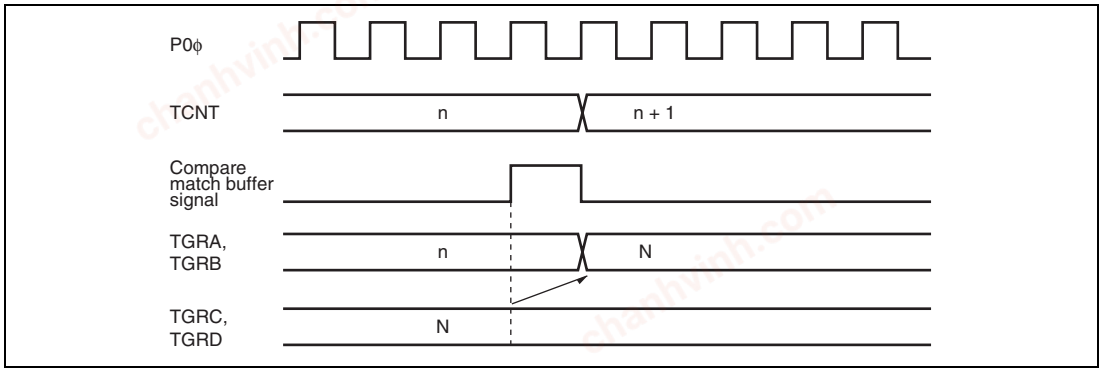

Figure 12.86 Buffer Operation Timing (Compare Match)

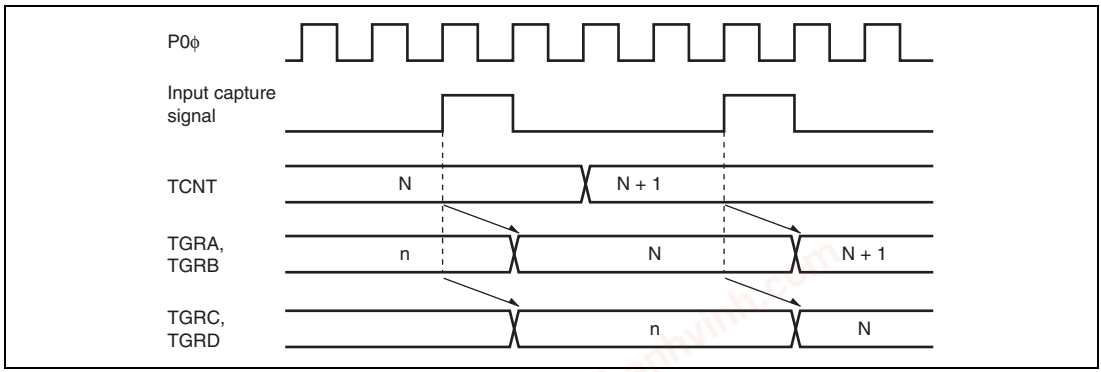

Figure 12.87 Buffer Operation Timing (Input Capture)

chanhvinh.com

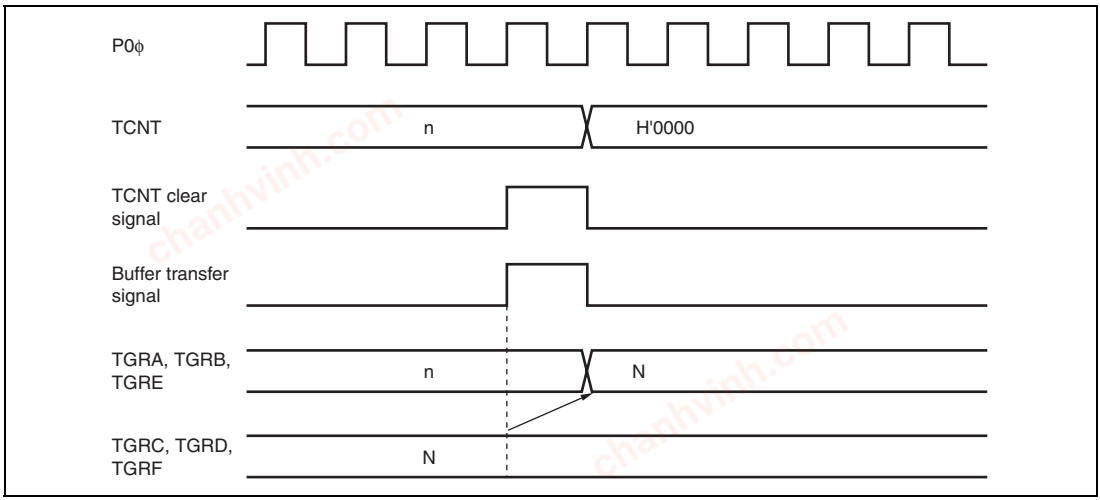

Figure 12.88 Buffer Transfer Timing (when TCNT Cleared)

(6) Buffer Transfer Timing (Complementary PWM Mode)

Figures 12.89 to 12.91 show the buffer transfer timing in complementary PWM mode.

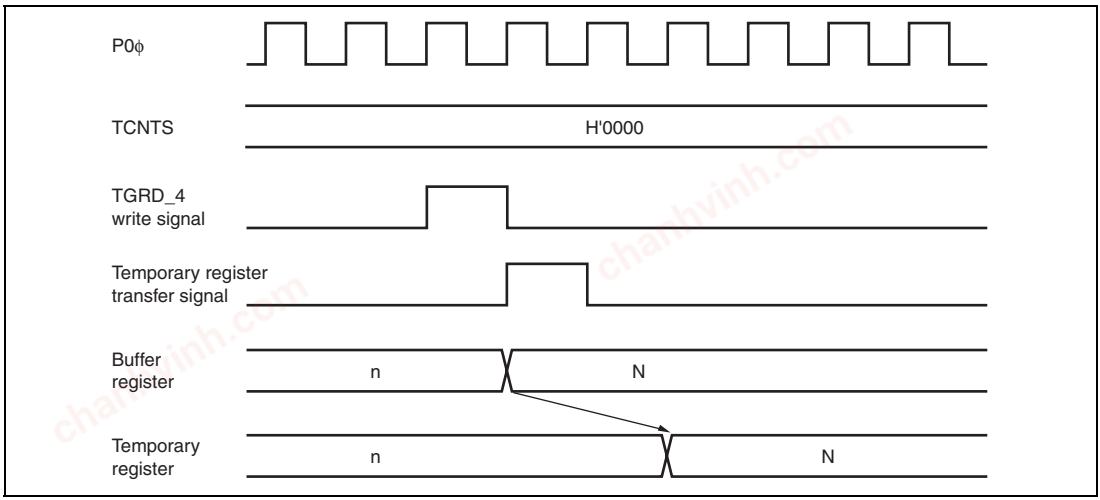

Figure 12.89 Transfer Timing from Buffer Register to Temporary Register (TCNTS Stop)

chanhvinh.com

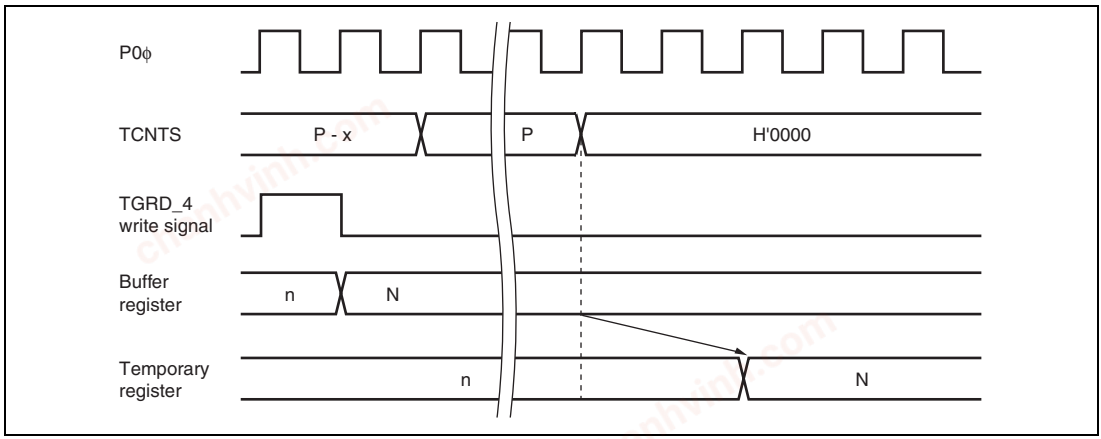

Figure 12.90 Transfer Timing from Buffer Register to Temporary Register (TCNTS Operating)

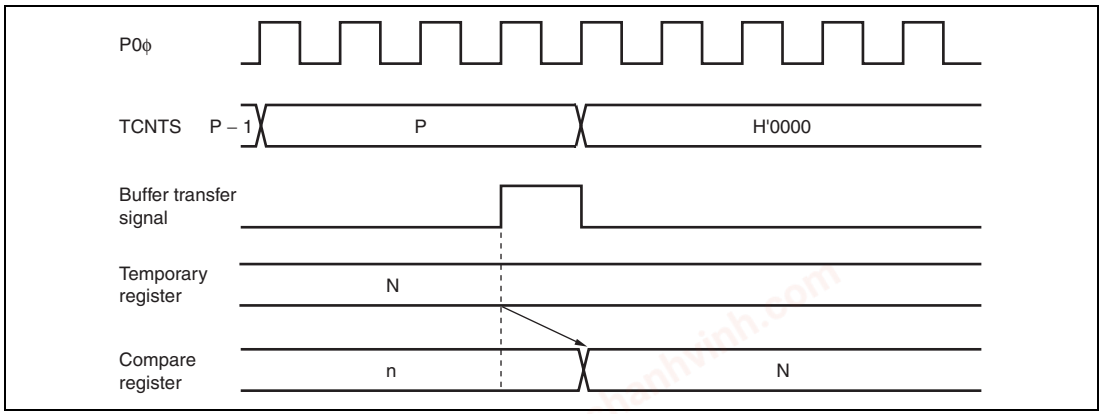

Figure 12.91 Transfer Timing from Temporary Register to Compare Register

chanhvinh.com

12.6.2 Interrupt Signal Timing

(1) TGF Flag Setting Timing in Case of Compare Match

Figure 12.92 shows the timing for setting of the TGF flag in TSR on compare match, and TGI interrupt request signal timing.

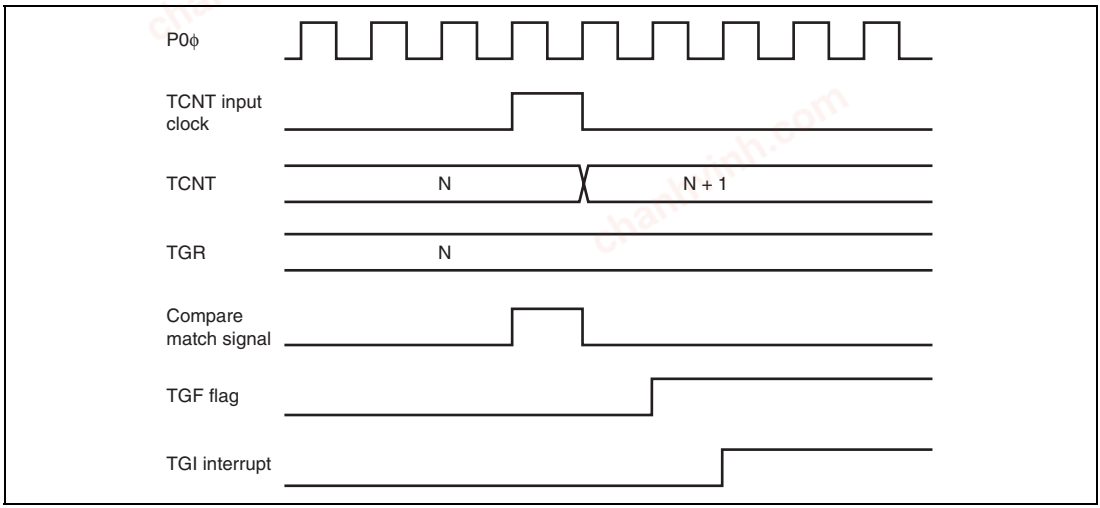

Figure 12.92 TGI Interrupt Timing (Compare Match)

chanhvinh.com

(2) TGF Flag Setting Timing in Case of Input Capture

Figure 12.93 shows the timing for setting of the TGF flag in TSR on input capture, and TGI interrupt request signal timing.

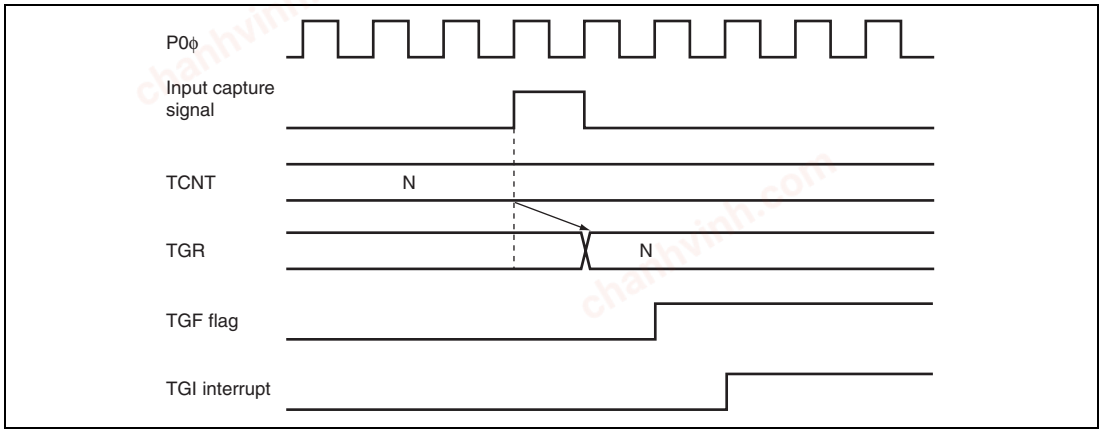

Figure 12.93 TGI Interrupt Timing (Input Capture)

chanhvinh.com

(3) TCFV Flag/TCFU Flag Setting Timing

Figure 12.94 shows the timing for setting of the TCFV flag in TSR on overflow, and TCIV interrupt request signal timing.

Figure 12.95 shows the timing for setting of the TCFU flag in TSR on underflow, and TCIU interrupt request signal timing.

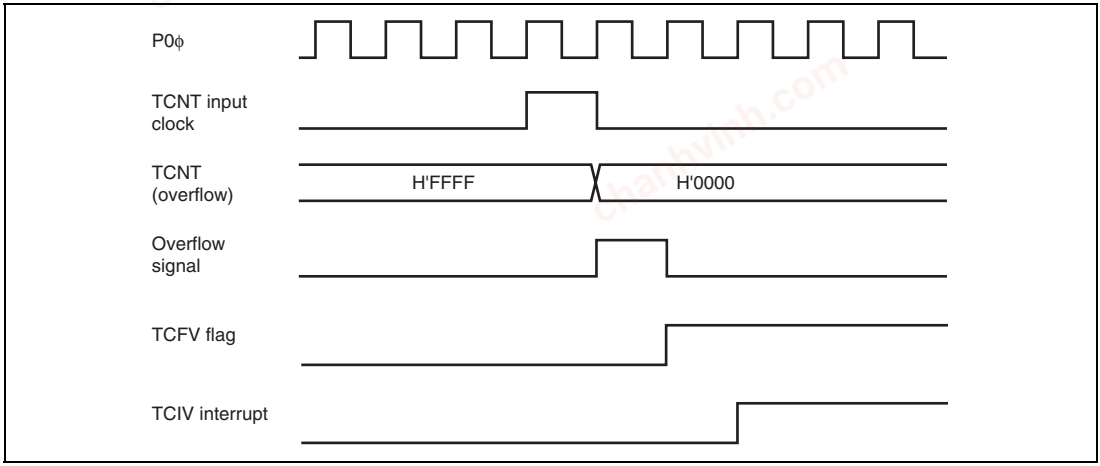

Figure 12.94 TCIV Interrupt Setting Timing

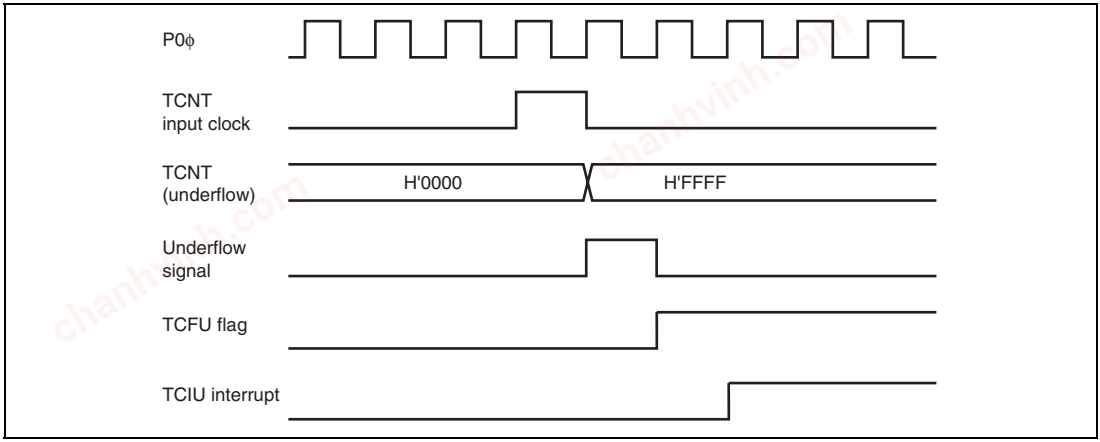

Figure 12.95 TCIU Interrupt Setting Timing

chanhvinh.com

(4) Status Flag Clearing Timing

After a status flag is read as 1 by the CPU, it is cleared by writing 0 to it. When the direct memory access controller is activated, the flag is cleared automatically. Figure 12.96 shows the timing for status flag clearing by the CPU, and Figure 12.97 shows the timing for status flag clearing by the direct memory access controller.

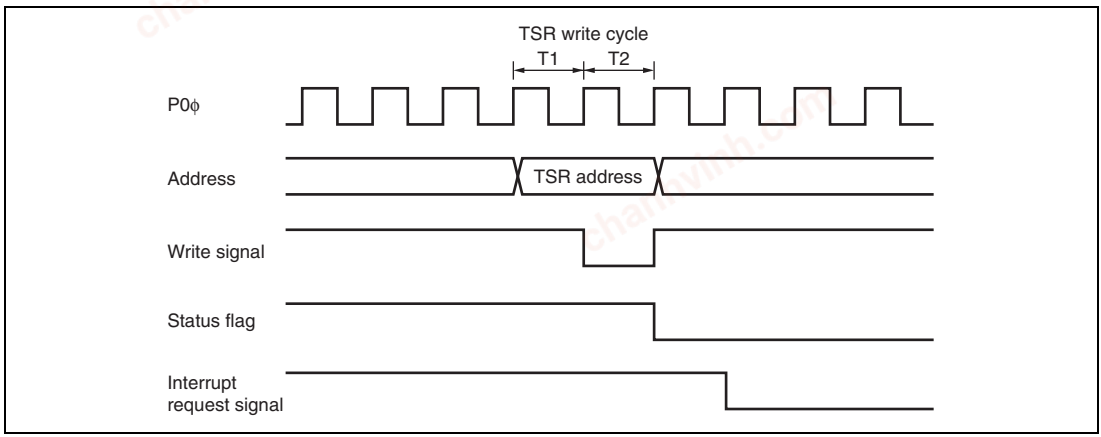

Figure 12.96 Timing for Status Flag Clearing by CPU

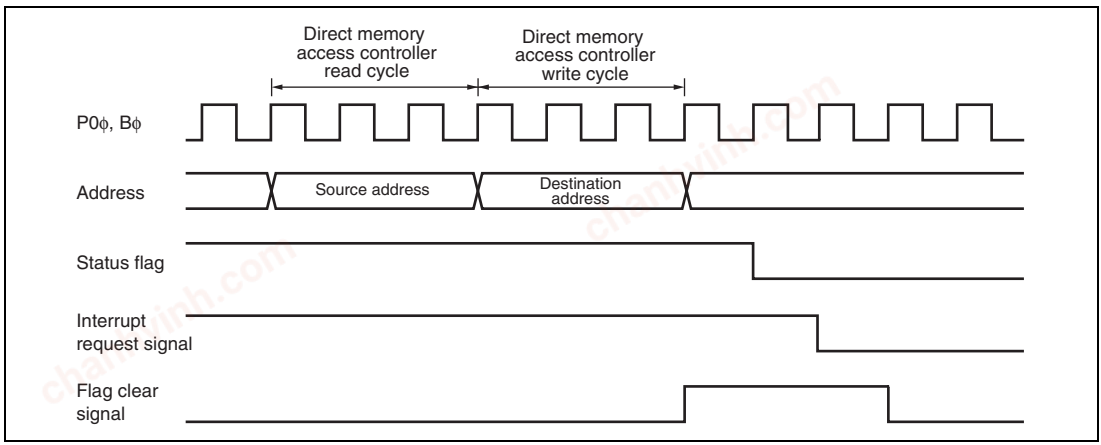

Figure 12.97 Timing for Status Flag Clearing by Direct Memory Access Controller Activation

chanhvinh.com

12.7 Usage Notes

12.7.1 Module Standby Mode Setting

Operation of this module can be disabled or enabled using the standby control register. The initial setting is for the operation to be halted. Register access is enabled by clearing module standby mode. For details, refer to section 49, Power-Down Modes.

12.7.2 Input Clock Restrictions

The input clock pulse width must be at least 1.5 states in the case of single-edge detection, and at least 2.5 states in the case of both-edge detection. This module will not operate properly at narrower pulse widths.

In phase counting mode, the phase difference and overlap between the two input clocks must be at least 1.5 states, and the pulse width must be at least 2.5 states. Figure 12.98 shows the input clock conditions in phase counting mode.

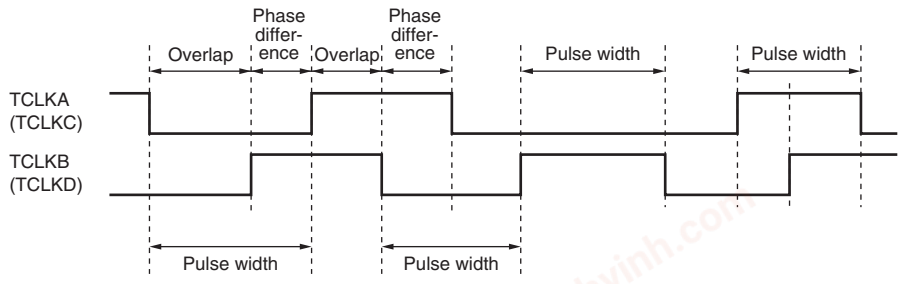

Notes: Phase difference and overlap : 1.5 states or more
Pulse width : 2.5 states or more

Figure 12.98 Phase Difference, Overlap, and Pulse Width in Phase Counting Mode

chanhvinh.com

12.7.3 Caution on Period Setting

When counter clearing on compare match is set, TCNT is cleared in the final state in which it matches the TGR value (the point at which the count value matched by TCNT is updated). Consequently, the actual counter frequency is given by the following formula:

$$f = \frac{P0\phi}{(N + 1)}$$

Where f: Counter frequency
P0ϕ: Peripheral clock operating frequency
N: TGR set value

12.7.4 Contention between TCNT Write and Clear Operations

If the counter clear signal is generated in the T2 state of a TCNT write cycle, TCNT clearing takes precedence and the TCNT write is not performed.

Figure 12.99 shows the timing in this case.

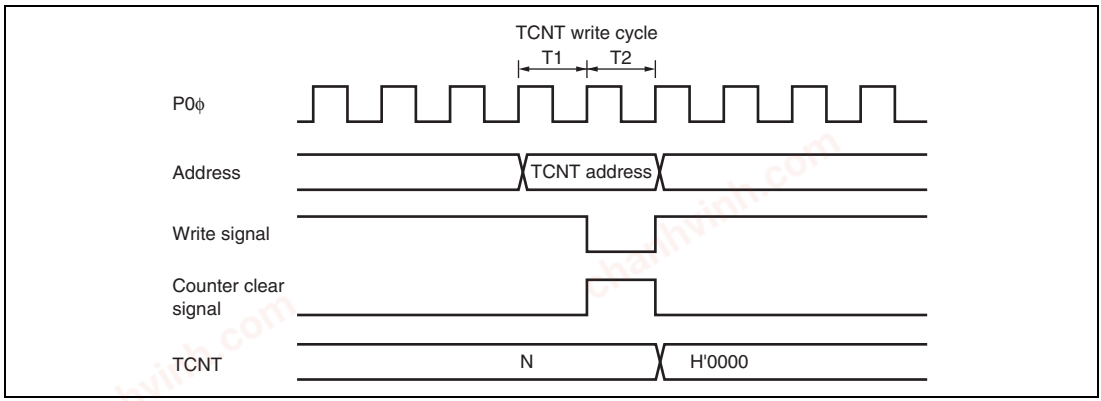

Figure 12.99 Contention between TCNT Write and Clear Operations

chanhvinh.com

12.7.5 Contention between TCNT Write and Increment Operations

If incrementing occurs in the T2 state of a TCNT write cycle, the TCNT write takes precedence and TCNT is not incremented.

Figure 12.100 shows the timing in this case.

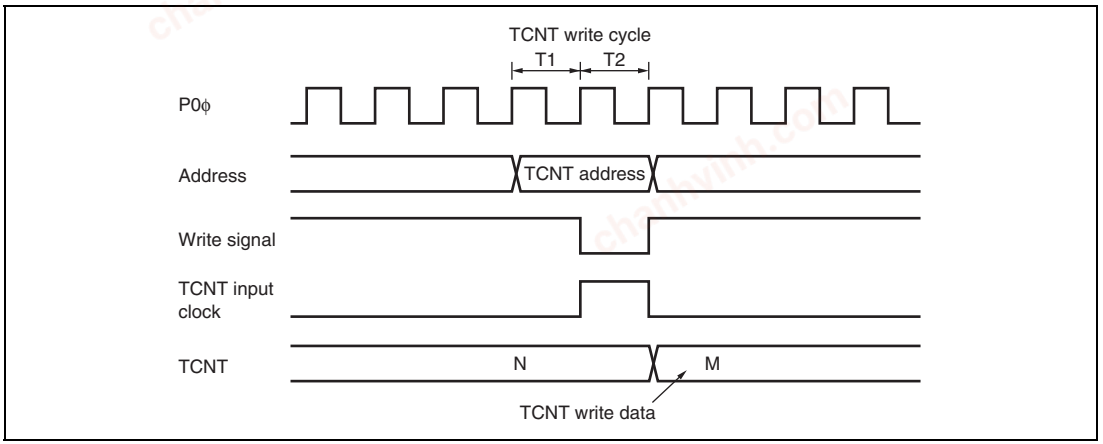

Figure 12.100 Contention between TCNT Write and Increment Operations

chanhvinh.com

12.7.6 Contention between TGR Write and Compare Match

If a compare match occurs in the T2 state of a TGR write cycle, the TGR write is executed and the compare match signal is also generated.

Figure 12.101 shows the timing in this case.

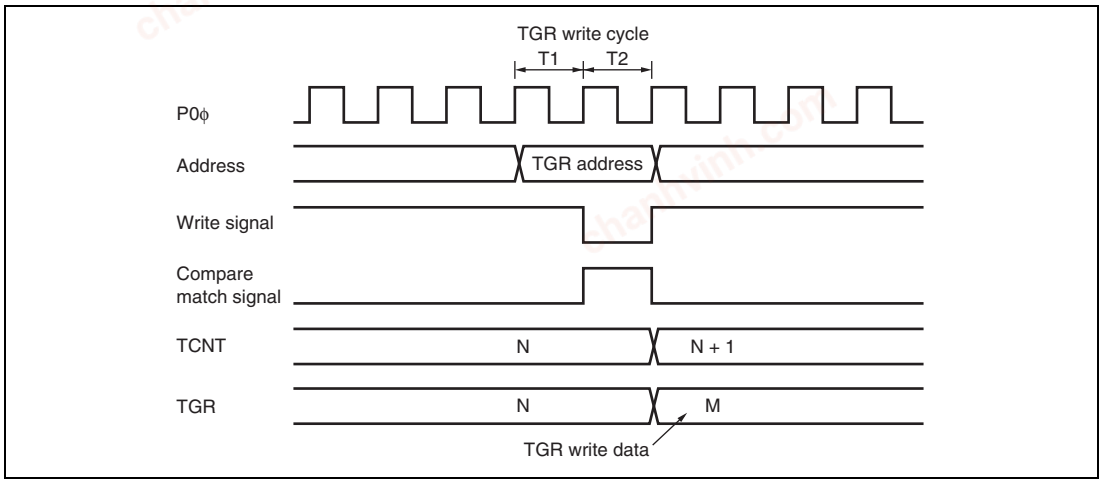

Figure 12.101 Contention between TGR Write and Compare Match

chanhvinh.com

12.7.7 Contention between Buffer Register Write and Compare Match

If a compare match occurs in the T2 state of a TGR write cycle, the data that is transferred to TGR by the buffer operation is the data after write.

Figure 12.102 shows the timing in this case.

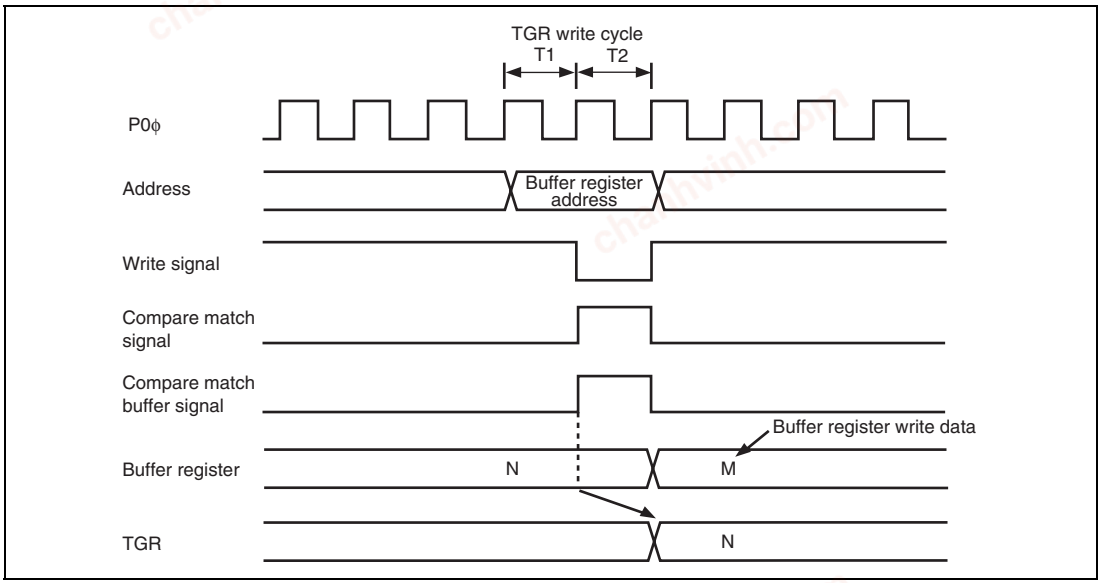

Figure 12.102 Contention between Buffer Register Write and Compare Match

chanhvinh.com

12.7.8 Contention between Buffer Register Write and TCNT Clear

When the buffer transfer timing is set at the TCNT clear by the buffer transfer mode register (TBTM), if TCNT clear occurs in the T2 state of a TGR write cycle, the data that is transferred to TGR by the buffer operation is the data before write.

Figure 12.103 shows the timing in this case.

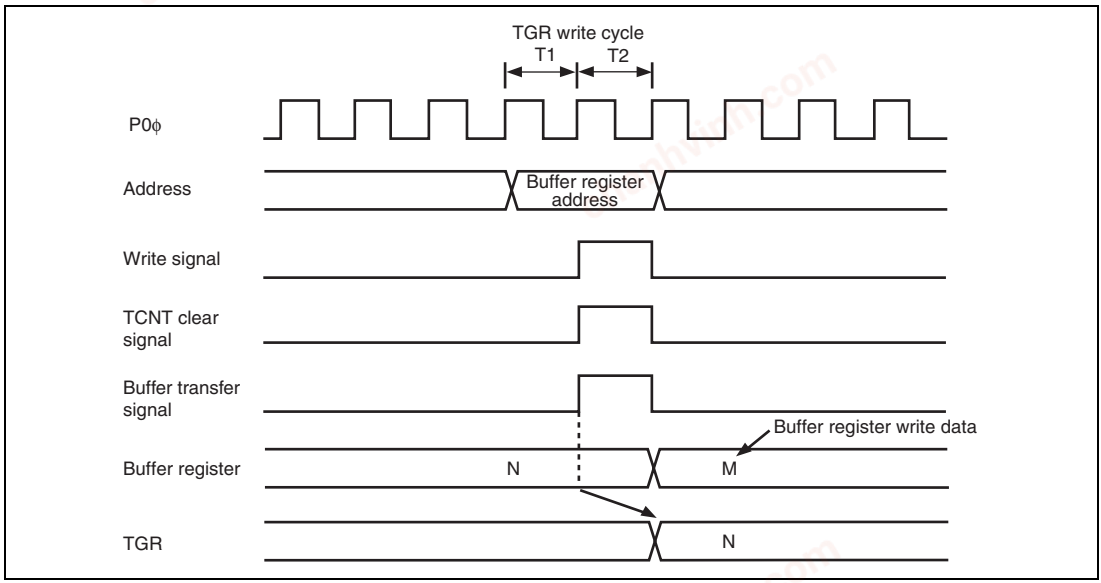

Figure 12.103 Contention between Buffer Register Write and TCNT Clear

chanhvinh.com

12.7.9 Contention between TGR Read and Input Capture

If an input capture signal is generated in the T1 state of a TGR read cycle, the data that is read will be the data in the buffer before input capture transfer.

Figure 12.104 shows the timing in this case.

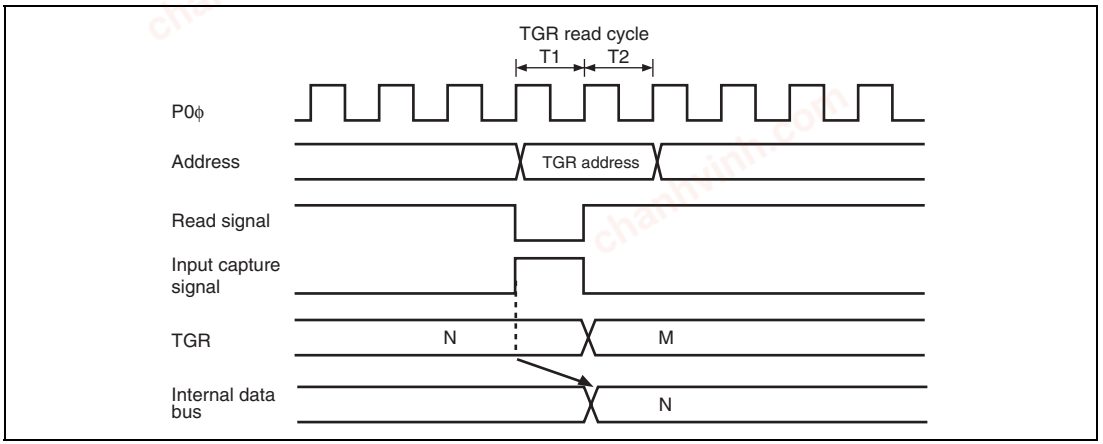

Figure 12.104 Contention between TGR Read and Input Capture

chanhvinh.com

12.7.10 Contention between TGR Write and Input Capture

If an input capture signal is generated in the T2 state of a TGR write cycle, the input capture operation takes precedence and the write to TGR is not performed.

Figure 12.105 shows the timing in this case.

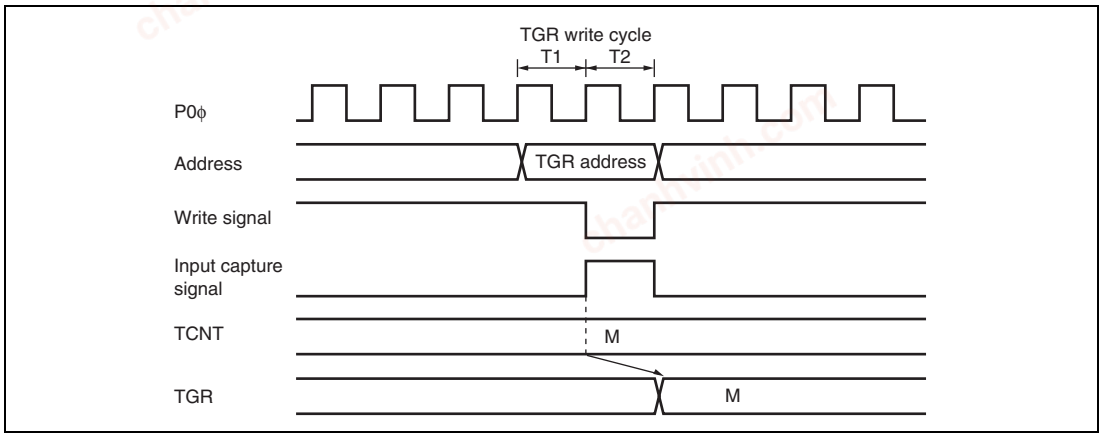

Figure 12.105 Contention between TGR Write and Input Capture

chanhvinh.com

12.7.11 Contention between Buffer Register Write and Input Capture

If an input capture signal is generated in the T2 state of a buffer register write cycle, the buffer operation takes precedence and the write to the buffer register is not performed.

Figure 12.106 shows the timing in this case.

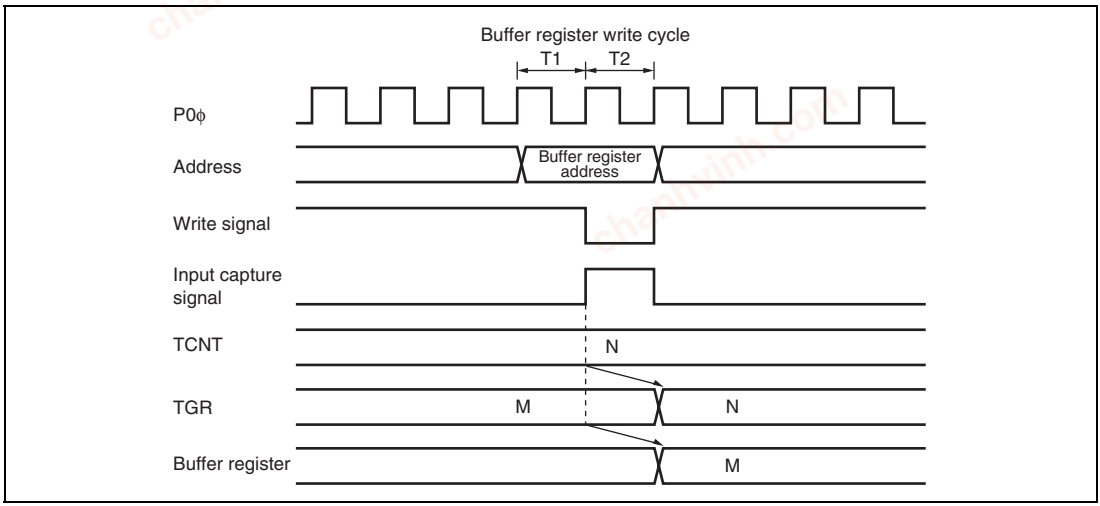

Figure 12.106 Contention between Buffer Register Write and Input Capture

12.7.12 TCNT2 Write and Overflow/Underflow Contention in Cascade Connection

With timer counters TCNT1 and TCNT2 in a cascade connection, when a contention occurs during TCNT_1 count (during a TCNT_2 overflow/underflow) in the T_2 state of the TCNT_2 write cycle, the write to TCNT_2 is conducted, and the TCNT_1 count signal is disabled. At this point, if there is match with TGRA_1 and the TCNT_1 value, a compare signal is issued. Furthermore, when the TCNT_1 count clock is selected as the input capture source of channel 0, TGRA_0 to D_0 carry out the input capture operation. In addition, when the compare match/input capture is selected as the input capture source of TGRB_1, TGRB_1 carries out input capture operation. The timing is shown in figure 12.107.

For cascade connections, be sure to synchronize settings for channels 1 and 2 when setting TCNT clearing.

chanhvinh.com

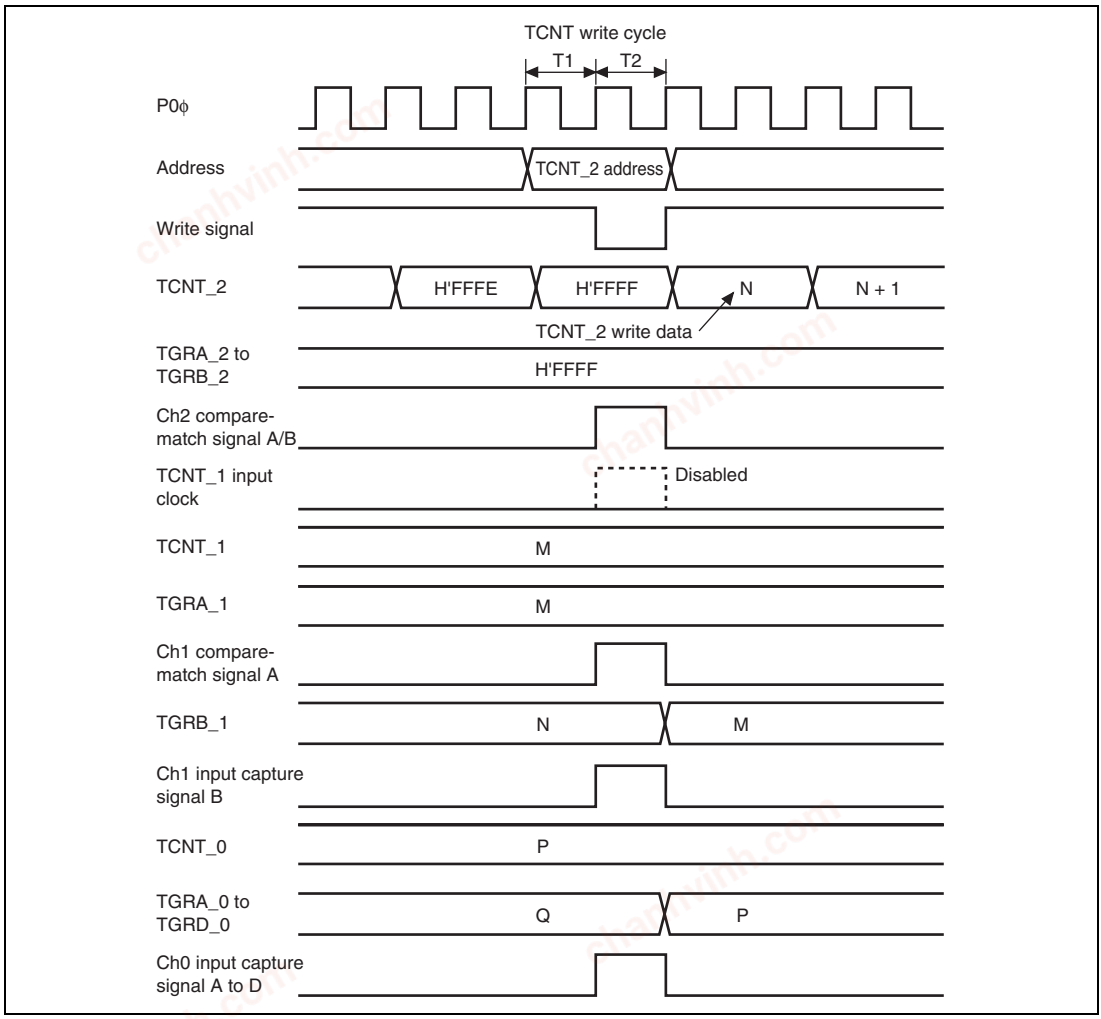

Figure 12.107 TCNT_2 Write and Overflow/Underflow Contention with Cascade Connection

chanhvinh.com

12.7.13 Counter Value during Complementary PWM Mode Stop

When counting operation is suspended with TCNT_3 and TCNT_4 in complementary PWM mode, TCNT_3 has the timer dead time register (TDDR) value, and TCNT_4 is held at H'0000.

When restarting complementary PWM mode, counting begins automatically from the initialized state. This explanatory diagram is shown in figure 12.108.

When counting begins in another operating mode, be sure that TCNT_3 and TCNT_4 are set to the initial values.

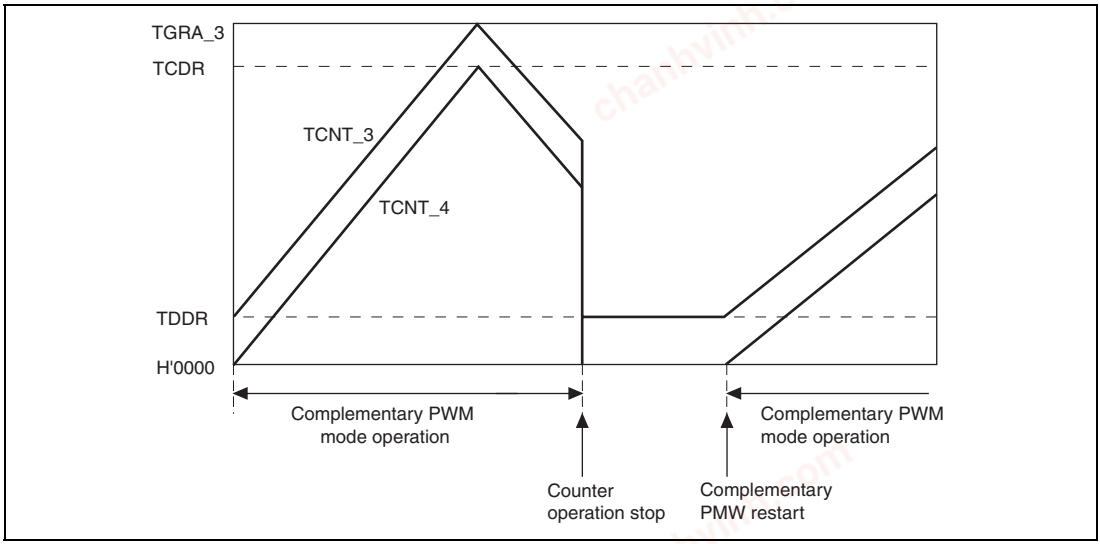

Figure 12.108 Counter Value during Complementary PWM Mode Stop

12.7.14 Buffer Operation Setting in Complementary PWM Mode

In complementary PWM mode, conduct rewrites by buffer operation for the PWM cycle setting register (TGRA_3), timer cycle data register (TCDR), and duty setting registers (TGRB_3, TGRA_4, and TGRB_4).

In complementary PWM mode, channel 3 and channel 4 buffers operate in accordance with bit settings BFA and BFB of TMDR_3. When TMDR_3's BFA bit is set to 1, TGRC_3 functions as a buffer register for TGRA_3. At the same time, TGRC_4 functions as the buffer register for TGRA_4, and TCBR functions as the TCDR's buffer register.

chanhvinh.com

12.7.15 Reset Sync PWM Mode Buffer Operation and Compare Match Flag

When setting buffer operation for reset sync PWM mode, set the BFA and BFB bits of TMDR_4 to 0. The TIOC4C pin will be unable to produce its waveform output if the BFA bit of TMDR_4 is set to 1.

In reset sync PWM mode, the channel 3 and channel 4 buffers operate in accordance with the BFA and BFB bit settings of TMDR_3. For example, if the BFA bit of TMDR_3 is set to 1, TGRC_3 functions as the buffer register for TGRA_3. At the same time, TGRC_4 functions as the buffer register for TGRA_4.

The TGFC bit and TGFD bit of TSR_3 and TSR_4 are not set when TGRC_3 and TGRD_3 are operating as buffer registers.

Figure 12.109 shows an example of operations for TGR_3, TGR_4, TIOC3, and TIOC4, with TMDR_3's BFA and BFB bits set to 1, and TMDR_4's BFA and BFB bits set to 0.

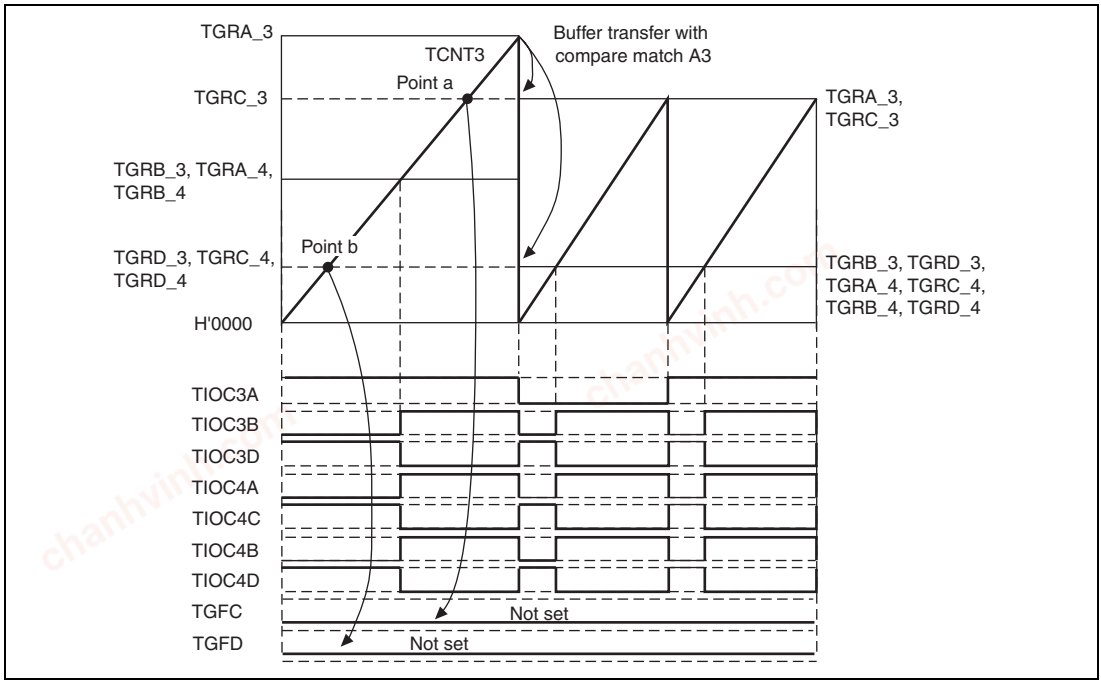

Figure 12.109 Buffer Operation and Compare-Match Flags in Reset Synchronous PWM Mode

chanhvinh.com

12.7.16 Overflow Flags in Reset Synchronous PWM Mode

When set to reset synchronous PWM mode, TCNT_3 and TCNT_4 start counting when the CST3 bit of TSTR is set to 1. At this point, TCNT_4's count clock source and count edge obey the TCR_3 setting.

In reset synchronous PWM mode, with cycle register TGRA_3's set value at H'FFFF, when specifying TGR3A compare-match for the counter clear source, TCNT_3 and TCNT_4 count up to H'FFFF, then a compare-match occurs with TGRA_3, and TCNT_3 and TCNT_4 are both cleared. At this point, TSR's overflow flag TCFV bit is not set.

Figure 12.110 shows a TCFV bit operation example in reset synchronous PWM mode with a set value for cycle register TGRA_3 of H'FFFF, when a TGRA_3 compare-match has been specified without synchronous setting for the counter clear source.

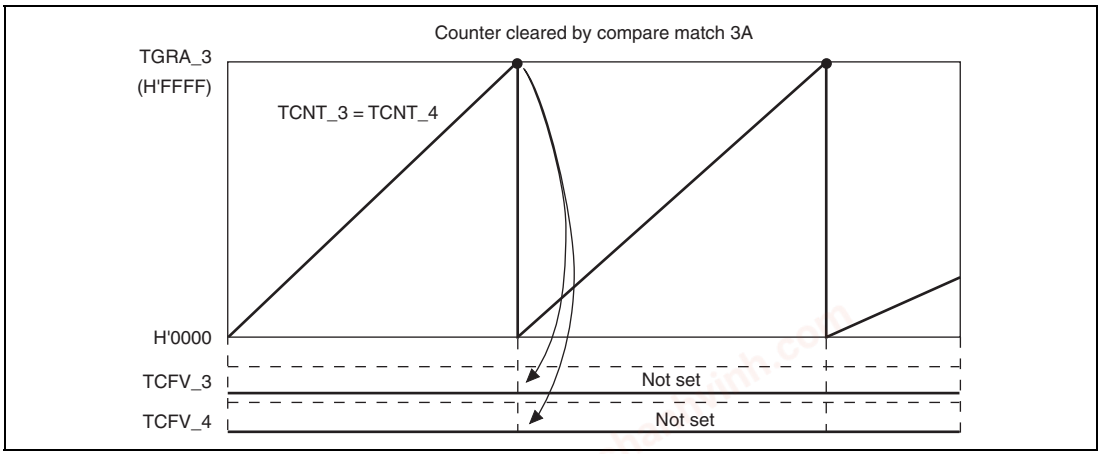

Figure 12.110 Reset Synchronous PWM Mode Overflow Flag

chanhvinh.com

12.7.17 Contention between Overflow/Underflow and Counter Clearing

If overflow/underflow and counter clearing occur simultaneously, the TCFV/TCFU flag in TSR is not set and TCNT clearing takes precedence.

Figure 12.111 shows the operation timing when a TGR compare match is specified as the clearing source, and when H'FFFF is set in TGR.

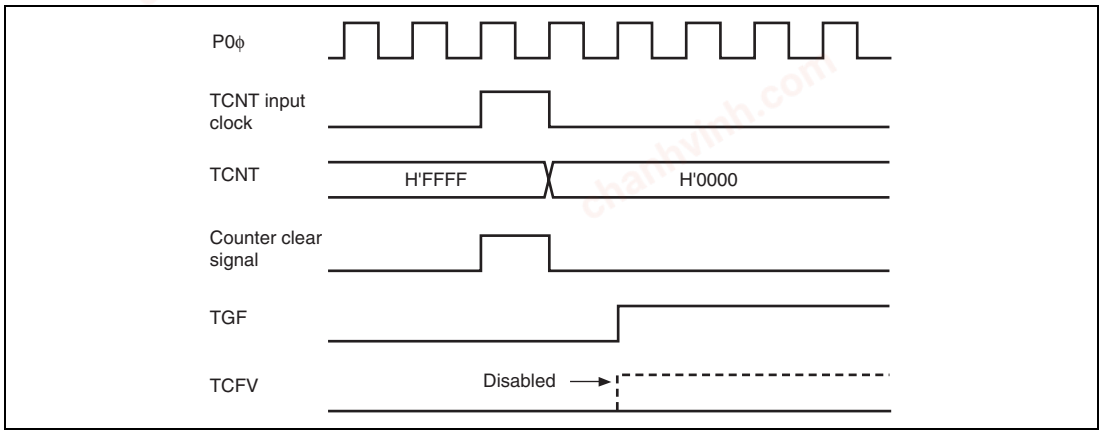

Figure 12.111 Contention between Overflow and Counter Clearing

chanhvinh.com

12.7.18 Contention between TCNT Write and Overflow/Underflow

If there is an up-count or down-count in the T2 state of a TCNT write cycle, and overflow/underflow occurs, the TCNT write takes precedence and the TCFV/TCFU flag in TSR is not set.

Figure 12.112 shows the operation timing when there is contention between TCNT write and overflow.

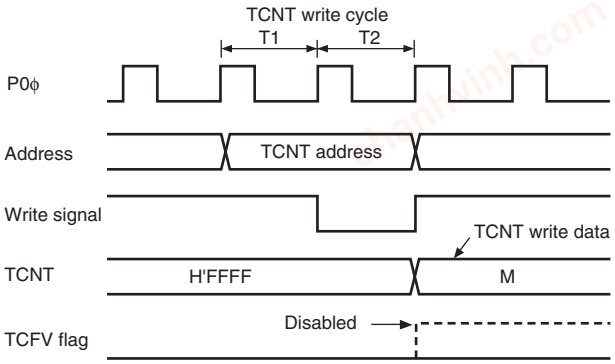

Figure 12.112 Contention between TCNT Write and Overflow

12.7.19 Cautions on Transition from Normal Operation or PWM Mode 1 to Reset-Synchronized PWM Mode

When making a transition from channel 3 or 4 normal operation or PWM mode 1 to reset-synchronized PWM mode, if the counter is halted with the output pins (TIOC3B, TIOC3D, TIOC4A, TIOC4C, TIOC4B, TIOC4D) in the high-level state, followed by the transition to reset-synchronized PWM mode and operation in that mode, the initial pin output will not be correct.

When making a transition from normal operation to reset-synchronized PWM mode, write H'11 to registers TIORH_3, TIORL_3, TIORH_4, and TIORL_4 to initialize the output pins to low level output, then set an initial register value of H'00 before making the mode transition.

When making a transition from PWM mode 1 to reset-synchronized PWM mode, first switch to normal operation, then initialize the output pins to low level output and set an initial register value of H'00 before making the transition to reset-synchronized PWM mode.

chanhvinh.com

12.7.20 Output Level in Complementary PWM Mode and Reset-Synchronized PWM Mode

When channels 3 and 4 are in complementary PWM mode or reset-synchronized PWM mode, the PWM waveform output level is set with the OLSP and OLSN bits in the timer output control register (TOCR). In the case of complementary PWM mode or reset-synchronized PWM mode, TIOR should be set to H'00.

12.7.21 Interrupts in Module Standby Mode

If module standby mode is entered when an interrupt has been requested, it will not be possible to clear the CPU interrupt source or the direct memory access controller activation source. Interrupts should therefore be disabled before entering module standby mode.

12.7.22 Simultaneous Capture of TCNT_1 and TCNT_2 in Cascade Connection

When timer counters 1 and 2 (TCNT_1 and TCNT_2) are operated as a 32-bit counter in cascade connection, the cascade counter value cannot be captured successfully even if input-capture input is simultaneously done to TIOC1A and TIOC2A or to TIOC1B and TIOC2B. This is because the input timing of TIOC1A and TIOC2A or of TIOC1B and TIOC2B may not be the same when external input-capture signals to be input into TCNT_1 and TCNT_2 are taken in synchronization with the internal clock. For example, TCNT_1 (the counter for upper 16 bits) does not capture the count-up value by overflow from TCNT_2 (the counter for lower 16 bits) but captures the count value before the count-up. In this case, the values of TCNT_1 = H'FFF1 and TCNT_2 = H'0000 should be transferred to TGRA_1 and TGRA_2 or to TGRB_1 and TGRB_2, but the values of TCNT_1 = H'FFF0 and TCNT_2 = H'0000 are erroneously transferred.

chanhvinh.com

12.7.23 Notes on Output Waveform Control During Synchronous Counter Clearing in Complementary PWM Mode

In complementary PWM mode, when output waveform control during synchronous counter clearing is enabled (WRE in the TWCR register set to 1), the following problems may occur when condition (1) or condition (2), below, is satisfied.

- Dead time for the PWM output pins may be too short (or nonexistent).
- Active-level output from the PWM negative-phase pins may occur outside the correct active-level output interval

Condition (1): When synchronous clearing occurs in the PWM output dead time interval within initial output suppression interval (10) (figure 12.113).

Condition (2): When synchronous clearing occurs within initial output suppression interval (10) or (11) and TGRB_3 ≤ TDDR, TGRA_4 ≤ TDDR, or TGRB_4 ≤ TDDR is true (figure 12.114)

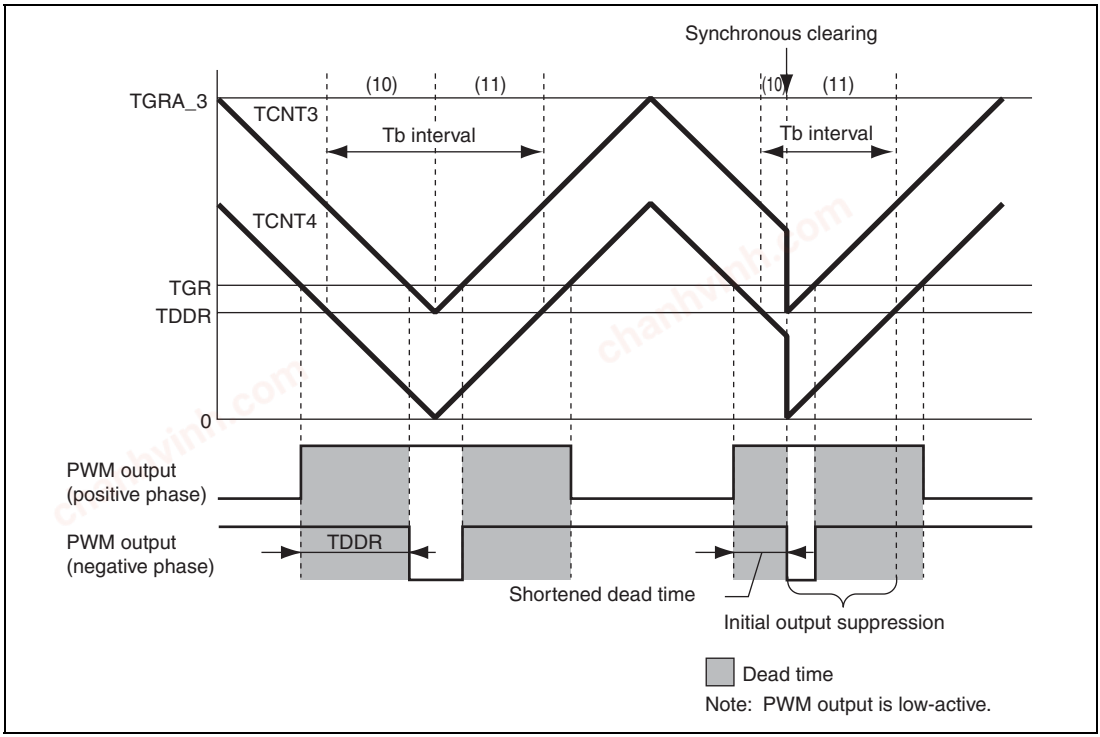

Figure 12.113 Condition (1) Synchronous Clearing Example

chanhvinh.com

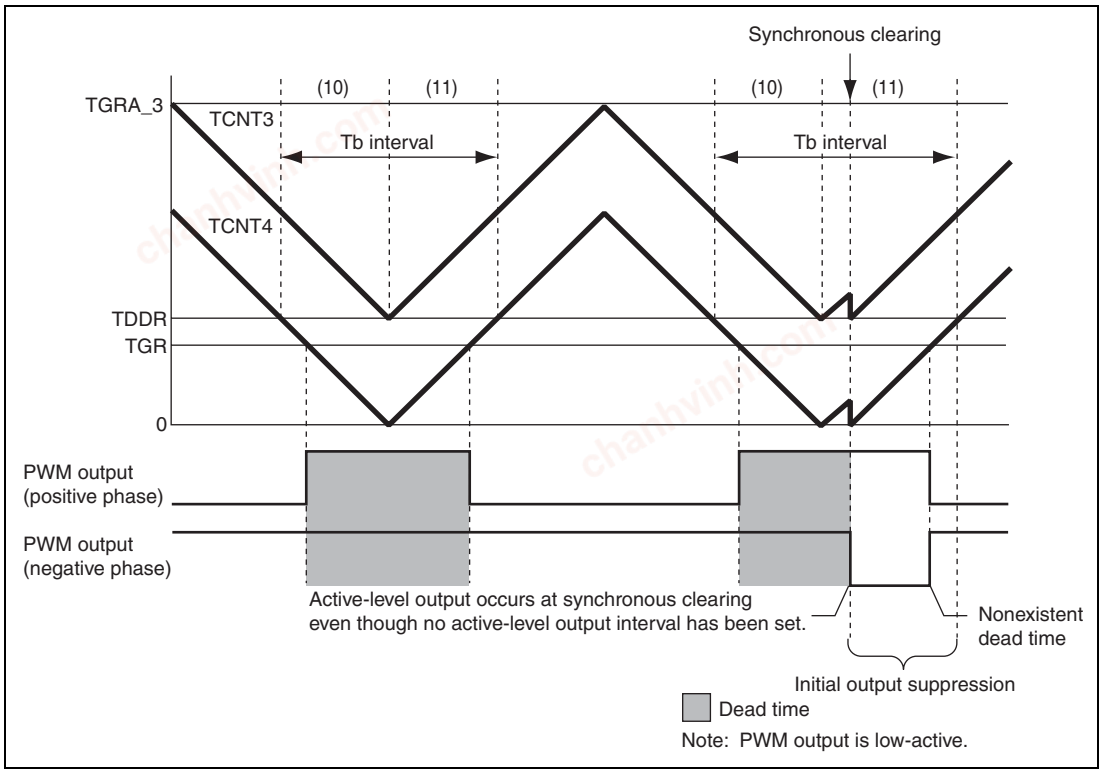

Figure 12.114 Condition (2) Synchronous Clearing Example

The following workaround can be used to avoid these problems.

When using synchronous clearing, make sure to set compare registers TGRB_3, TGRA_4, and TGRB_4 to a value twice or more the setting of dead time data register TDDR.

chanhvinh.com

12.8 Output Pin Initialization for Multi-Function Timer Pulse Unit 2

12.8.1 Operating Modes

This module has the following six operating modes. Waveform output is possible in all of these modes.

- Normal mode (channels 0 to 4)
- PWM mode 1 (channels 0 to 4)
- PWM mode 2 (channels 0 to 2)
- Phase counting modes 1 to 4 (channels 1 and 2)
- Complementary PWM mode (channels 3 and 4)
- Reset-synchronized PWM mode (channels 3 and 4)

The output pin initialization method for each of these modes is described in this section.

12.8.2 Reset Start Operation

The output pins of this module (TIOC*) are initialized low by a reset and in standby mode. Since the pin functions are selected using the general I/O ports, when the general I/O port is set, the pin states at that point are output to the ports. When this module output is selected by the general I/O port immediately after a reset, the initial output level, low, is output directly at the port. When the active level is low, the system will operate at this point, and therefore the general I/O port setting should be made after the initialization of the output pins is completed.

Note: Channel number and port notation are substituted for *.

chanhvinh.com

12.8.3 Operation in Case of Re-Setting Due to Error during Operation, etc.

If an error occurs during operation of this module, the module output should be cut by the system. Cutoff is performed by switching the pin output to port output with the general I/O port and outputting the inverse of the active level. The pin initialization procedures for re-setting due to an error during operation, etc., and the procedures for restarting in a different mode after re-setting, are shown below.

This module has six operating modes, as stated above. There are thus 36 mode transition combinations, but some transitions are not available with certain channel and mode combinations. Possible mode transition combinations are shown in table 12.57.

Table 12.57 Mode Transition Combinations

	After					
Before	**Normal**	**PWM1**	**PWM2**	**PCM**	**CPWM**	**RPWM**
Normal	(1)	(2)	(3)	(4)	(5)	(6)
PWM1	(7)	(8)	(9)	(10)	(11)	(12)
PWM2	(13)	(14)	(15)	(16)	None	None
PCM	(17)	(18)	(19)	(20)	None	None
CPWM	(21)	(22)	None	None	(23) (24)	(25)
RPWM	(26)	(27)	None	None	(28)	(29)

[Legend]
Normal: Normal mode
PWM1: PWM mode 1
PWM2: PWM mode 2
PCM: Phase counting modes 1 to 4
CPWM: Complementary PWM mode
RPWM: Reset-synchronized PWM mode

chanhvinh.com

12.8.4 Overview of Initialization Procedures and Mode Transitions in Case of Error during Operation, etc.

- When making a transition to a mode (Normal, PWM1, PWM2, PCM) in which the pin output level is selected by the timer I/O control register (TIOR) setting, initialize the pins by means of a TIOR setting.
- In PWM mode 1, since a waveform is not output to the TIOC*B (TIOC *D) pin, setting TIOR will not initialize the pins. If initialization is required, carry it out in normal mode, then switch to PWM mode 1.
- In PWM mode 2, since a waveform is not output to the cycle register pin, setting TIOR will not initialize the pins. If initialization is required, carry it out in normal mode, then switch to PWM mode 2.
- In normal mode or PWM mode 2, if TGRC and TGRD operate as buffer registers, setting TIOR will not initialize the buffer register pins. If initialization is required, clear buffer mode, carry out initialization, then set buffer mode again.
- In PWM mode 1, if either TGRC or TGRD operates as a buffer register, setting TIOR will not initialize the TGRC pin. To initialize the TGRC pin, clear buffer mode, carry out initialization, then set buffer mode again.
- When making a transition to a mode (CPWM, RPWM) in which the pin output level is selected by the timer output control register (TOCR) setting, switch to normal mode and perform initialization with TIOR, then restore TIOR to its initial value, and temporarily disable channel 3 and 4 output with the timer output master enable register (TOER). Then operate the unit in accordance with the mode setting procedure (TOCR setting, TMDR setting, TOER setting).

Note: Channel number is substituted for * indicated in this article.

Pin initialization procedures are described below for the numbered combinations in table 12.57. The active level is assumed to be low.

chanhvinh.com

(1) Operation when Error Occurs during Normal Mode Operation, and Operation is Restarted in Normal Mode

Figure 12.115 shows an explanatory diagram of the case where an error occurs in normal mode and operation is restarted in normal mode after re-setting.

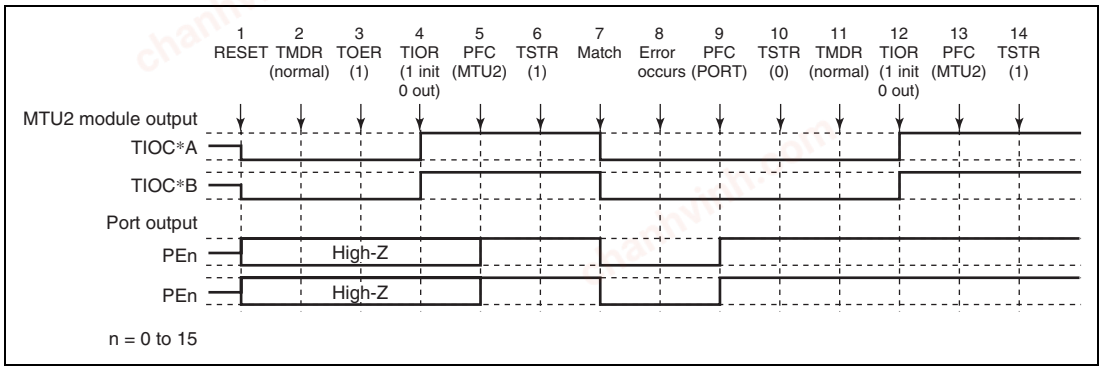

Figure 12.115 Error Occurrence in Normal Mode, Recovery in Normal Mode

1. After a reset, the module output is low and ports are in the high-impedance state.
2. After a reset, the TMDR setting is for normal mode.
3. For channels 3 and 4, enable output with TOER before initializing the pins with TIOR.
4. Initialize the pins with TIOR. (The example shows initial high output, with low output on compare-match occurrence.)
5. Set the multi-function timer pulse unit 2 output with the general I/O port.
6. The count operation is started by TSTR.
7. Output goes low on compare-match occurrence.
8. An error occurs.
9. Set port output with the general I/O port and output the inverse of the active level.
10. The count operation is stopped by TSTR.
11. Not necessary when restarting in normal mode.
12. Initialize the pins with TIOR.
13. Set the multi-function timer pulse unit 2 output with the general I/O port.
14. Operation is restarted by TSTR.

chanhvinh.com

(2) Operation when Error Occurs during Normal Mode Operation, and Operation is Restarted in PWM Mode 1

Figure 12.116 shows an explanatory diagram of the case where an error occurs in normal mode and operation is restarted in PWM mode 1 after re-setting.

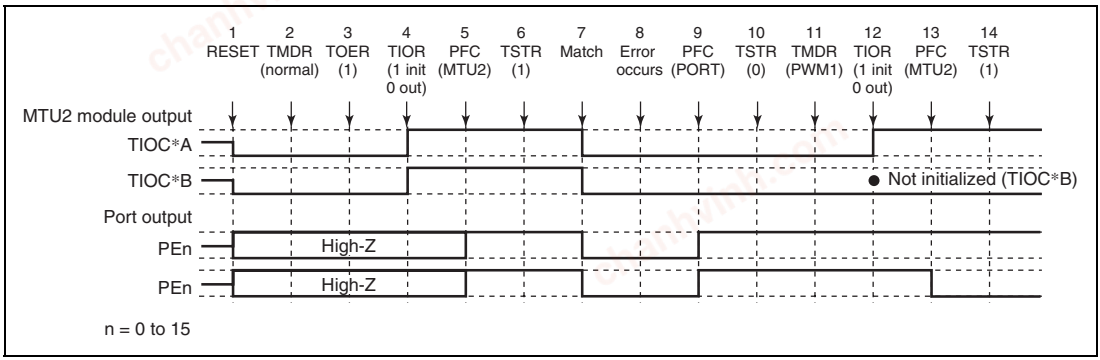

Figure 12.116 Error Occurrence in Normal Mode, Recovery in PWM Mode 1

1 to 10 are the same as in figure 12.115.

11. Set PWM mode 1.
12. Initialize the pins with TIOR. (In PWM mode 1, the TIOC*B side is not initialized. If initialization is required, initialize in normal mode, and then switch to PWM mode 1.)
13. Set the multi-function timer pulse unit 2 output with the general I/O port.
14. Operation is restarted by TSTR.

chanhvinh.com

(3) Operation when Error Occurs during Normal Mode Operation, and Operation is Restarted in PWM Mode 2

Figure 12.117 shows an explanatory diagram of the case where an error occurs in normal mode and operation is restarted in PWM mode 2 after re-setting.

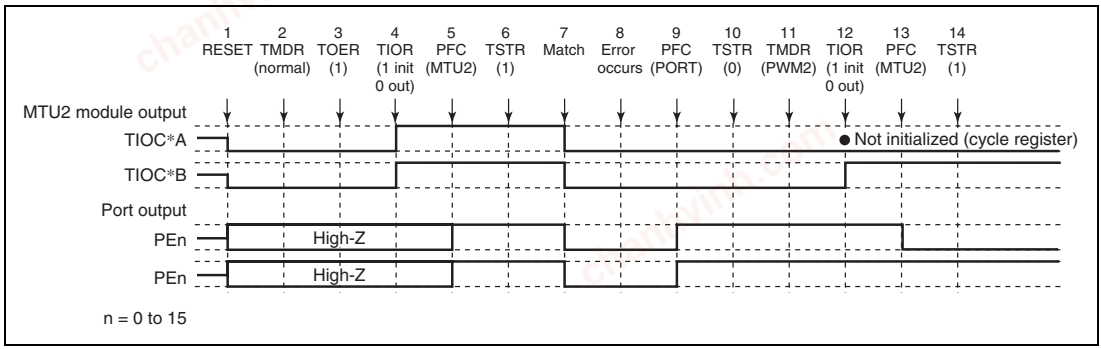

Figure 12.117 Error Occurrence in Normal Mode, Recovery in PWM Mode 2

1 to 10 are the same as in figure 12.115.

11. Set PWM mode 2.
12. Initialize the pins with TIOR. (In PWM mode 2, the cycle register pins are not initialized. If initialization is required, initialize in normal mode, and then switch to PWM mode 2.)
13. Set the multi-function timer pulse unit 2 output with the general I/O port.
14. Operation is restarted by TSTR.

Note: PWM mode 2 can only be set for channels 0 to 2, and therefore TOER setting is not necessary.

chanhvinh.com

(4) Operation when Error Occurs during Normal Mode Operation, and Operation is Restarted in Phase Counting Mode

Figure 12.118 shows an explanatory diagram of the case where an error occurs in normal mode and operation is restarted in phase counting mode after re-setting.

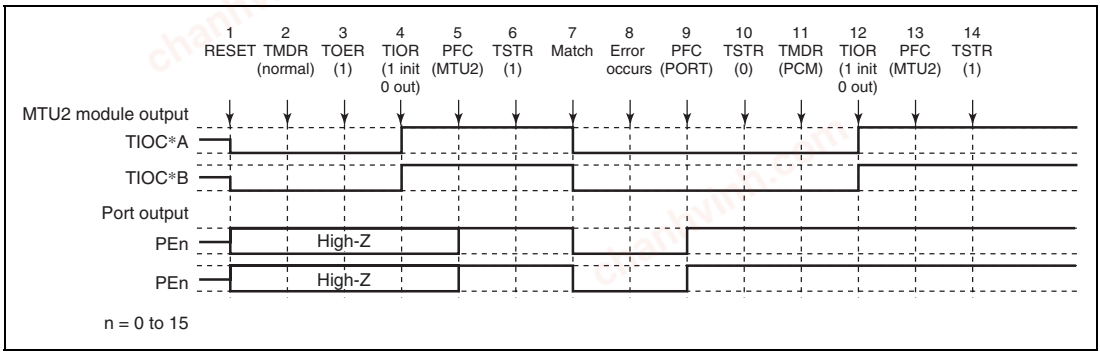

Figure 12.118 Error Occurrence in Normal Mode, Recovery in Phase Counting Mode

1 to 10 are the same as in figure 12.115.

11. Set phase counting mode.
12. Initialize the pins with TIOR.
13. Set the multi-function timer pulse unit 2 output with the general I/O port.
14. Operation is restarted by TSTR.

Note: Phase counting mode can only be set for channels 1 and 2, and therefore TOER setting is not necessary.

chanhvinh.com

(5) Operation when Error Occurs during Normal Mode Operation, and Operation is Restarted in Complementary PWM Mode

Figure 12.119 shows an explanatory diagram of the case where an error occurs in normal mode and operation is restarted in complementary PWM mode after re-setting.

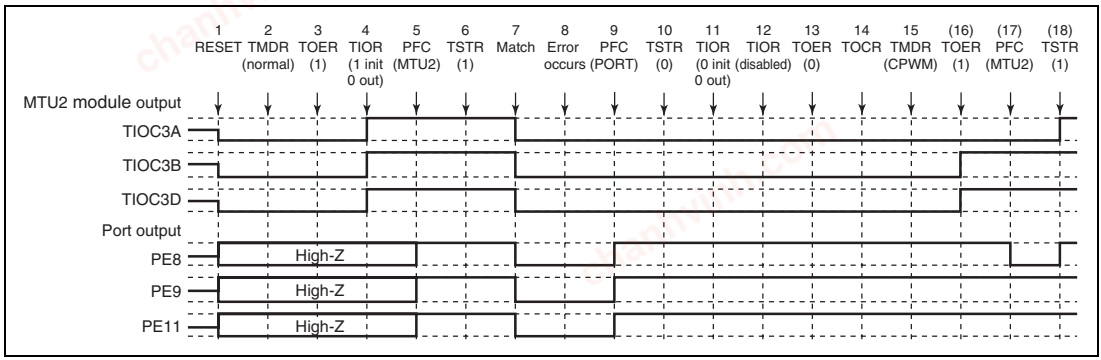

Figure 12.119 Error Occurrence in Normal Mode, Recovery in Complementary PWM Mode

1 to 10 are the same as in figure 12.115.

11. Initialize the normal mode waveform generation section with TIOR.
12. Disable operation of the normal mode waveform generation section with TIOR.
13. Disable channel 3 and 4 output with TOER.
14. Select the complementary PWM output level and cyclic output enabling/disabling with TOCR.
15. Set complementary PWM.
16. Enable channel 3 and 4 output with TOER.
17. Set the multi-function timer pulse unit 2 output with the general I/O port.
18. Operation is restarted by TSTR.

chanhvinh.com

(6) Operation when Error Occurs during Normal Mode Operation, and Operation is Restarted in Reset-Synchronized PWM Mode

Figure 12.120 shows an explanatory diagram of the case where an error occurs in normal mode and operation is restarted in reset-synchronized PWM mode after re-setting.

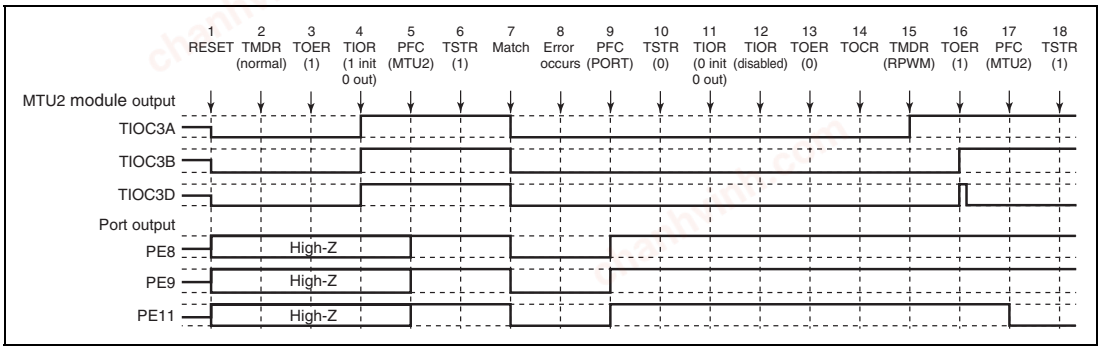

Figure 12.120 Error Occurrence in Normal Mode, Recovery in Reset-Synchronized PWM Mode

1 to 13 are the same as in figure 12.115.

14. Select the reset-synchronized PWM output level and cyclic output enabling/disabling with TOCR.
15. Set reset-synchronized PWM.
16. Enable channel 3 and 4 output with TOER.
17. Set the multi-function timer pulse unit 2 output with the general I/O port.
18. Operation is restarted by TSTR.

chanhvinh.com

(7) Operation when Error Occurs during PWM Mode 1 Operation, and Operation is Restarted in Normal Mode

Figure 12.121 shows an explanatory diagram of the case where an error occurs in PWM mode 1 and operation is restarted in normal mode after re-setting.

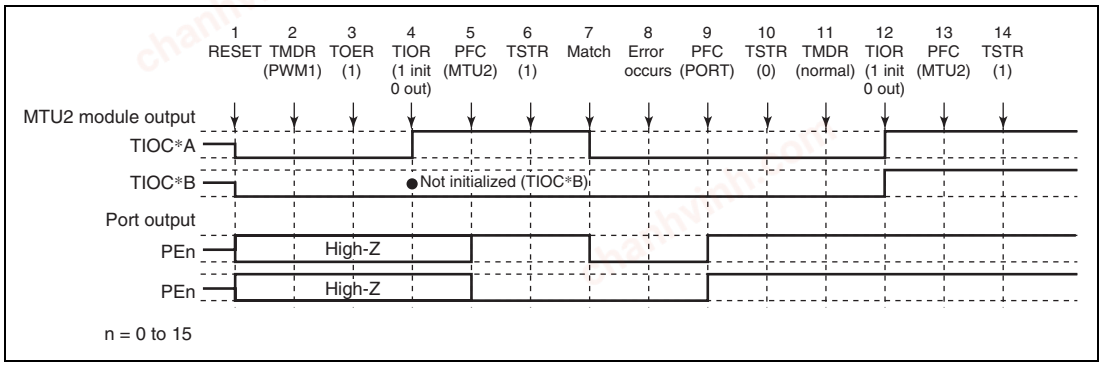

Figure 12.121 Error Occurrence in PWM Mode 1, Recovery in Normal Mode

1. After a reset, the module output is low and ports are in the high-impedance state.
2. Set PWM mode 1.
3. For channels 3 and 4, enable output with TOER before initializing the pins with TIOR.
4. Initialize the pins with TIOR. (The example shows initial high output, with low output on compare-match occurrence. In PWM mode 1, the TIOC*B side is not initialized.)
5. Set the multi-function timer pulse unit 2 output with the general I/O port.
6. The count operation is started by TSTR.
7. Output goes low on compare-match occurrence.
8. An error occurs.
9. Set port output with the general I/O port and output the inverse of the active level.
10. The count operation is stopped by TSTR.
11. Set normal mode.
12. Initialize the pins with TIOR.
13. Set the multi-function timer pulse unit 2 output with the general I/O port.
14. Operation is restarted by TSTR.

chanhvinh.com

(8) Operation when Error Occurs during PWM Mode 1 Operation, and Operation is Restarted in PWM Mode 1

Figure 12.122 shows an explanatory diagram of the case where an error occurs in PWM mode 1 and operation is restarted in PWM mode 1 after re-setting.

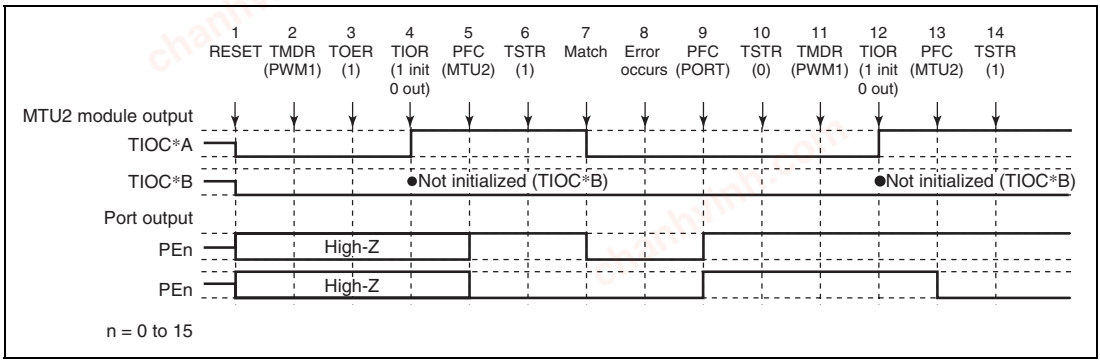

Figure 12.122 Error Occurrence in PWM Mode 1, Recovery in PWM Mode 1

1 to 10 are the same as in figure 12.121.

11. Not necessary when restarting in PWM mode 1.
12. Initialize the pins with TIOR. (In PWM mode 1, the TIOC*B side is not initialized.)
13. Set the multi-function timer pulse unit 2 output with the general I/O port.
14. Operation is restarted by TSTR.

chanhvinh.com

(9) Operation when Error Occurs during PWM Mode 1 Operation, and Operation is Restarted in PWM Mode 2

Figure 12.123 shows an explanatory diagram of the case where an error occurs in PWM mode 1 and operation is restarted in PWM mode 2 after re-setting.

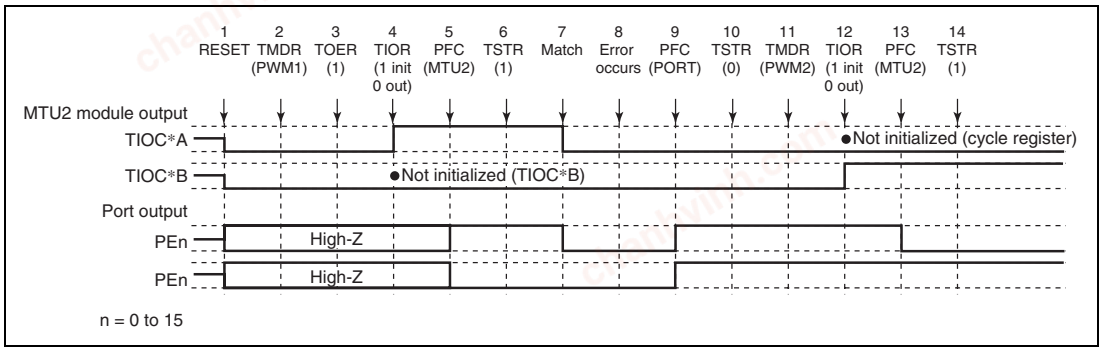

Figure 12.123 Error Occurrence in PWM Mode 1, Recovery in PWM Mode 2

1 to 10 are the same as in figure 12.121.

11. Set PWM mode 2.
12. Initialize the pins with TIOR. (In PWM mode 2, the cycle register pins are not initialized.)
13. Set the multi-function timer pulse unit 2 output with the general I/O port.
14. Operation is restarted by TSTR.

Note: PWM mode 2 can only be set for channels 0 to 2, and therefore TOER setting is not necessary.

chanhvinh.com

(10) Operation when Error Occurs during PWM Mode 1 Operation, and Operation is Restarted in Phase Counting Mode

Figure 12.124 shows an explanatory diagram of the case where an error occurs in PWM mode 1 and operation is restarted in phase counting mode after re-setting.

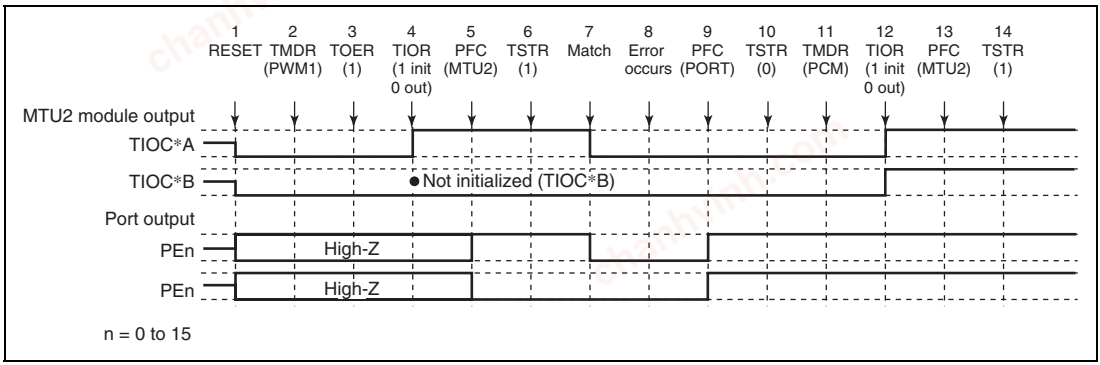

Figure 12.124 Error Occurrence in PWM Mode 1, Recovery in Phase Counting Mode

1 to 10 are the same as in figure 12.121.

11. Set phase counting mode.
12. Initialize the pins with TIOR.
13. Set the multi-function timer pulse unit 2 output with the general I/O port.
14. Operation is restarted by TSTR.

Note: Phase counting mode can only be set for channels 1 and 2, and therefore TOER setting is not necessary.

chanhvinh.com

(11) Operation when Error Occurs during PWM Mode 1 Operation, and Operation is Restarted in Complementary PWM Mode

Figure 12.125 shows an explanatory diagram of the case where an error occurs in PWM mode 1 and operation is restarted in complementary PWM mode after re-setting.

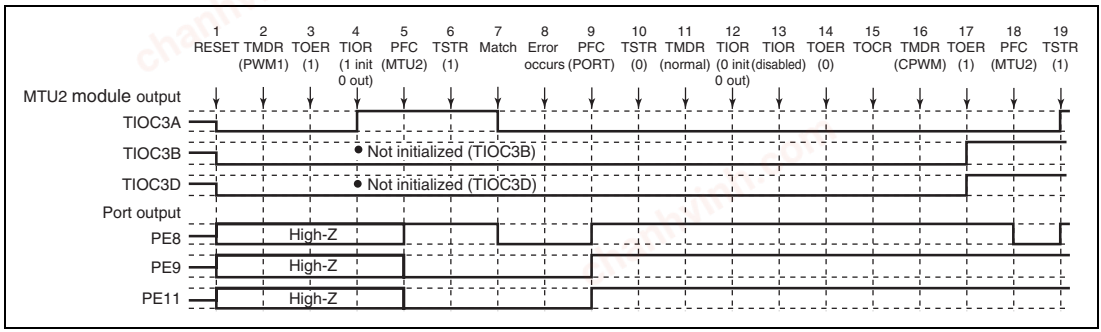

Figure 12.125 Error Occurrence in PWM Mode 1, Recovery in Complementary PWM Mode

1 to 10 are the same as in figure 12.121.

11. Set normal mode for initialization of the normal mode waveform generation section.
12. Initialize the PWM mode 1 waveform generation section with TIOR.
13. Disable operation of the PWM mode 1 waveform generation section with TIOR.
14. Disable channel 3 and 4 output with TOER.
15. Select the complementary PWM output level and cyclic output enabling/disabling with TOCR.
16. Set complementary PWM.
17. Enable channel 3 and 4 output with TOER.
18. Set the multi-function timer pulse unit 2 output with the general I/O port.
19. Operation is restarted by TSTR.

chanhvinh.com

(12) Operation when Error Occurs during PWM Mode 1 Operation, and Operation is Restarted in Reset-Synchronized PWM Mode

Figure 12.126 shows an explanatory diagram of the case where an error occurs in PWM mode 1 and operation is restarted in reset-synchronized PWM mode after re-setting.

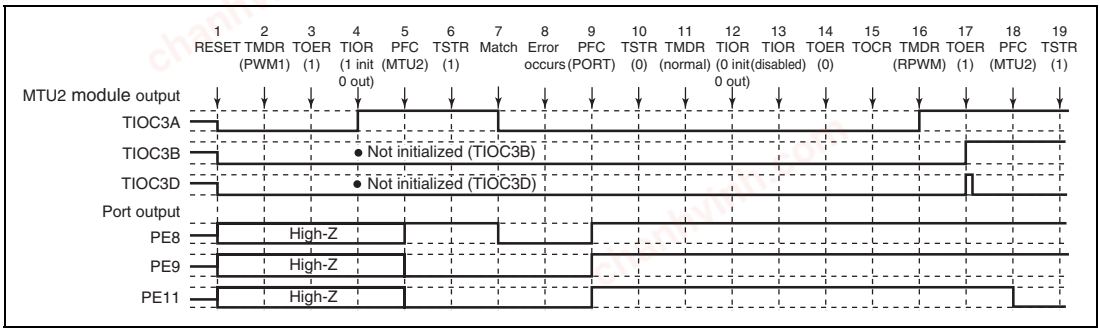

Figure 12.126 Error Occurrence in PWM Mode 1, Recovery in Reset-Synchronized PWM Mode

1 to 14 are the same as in figure 12.125.

15. Select the reset-synchronized PWM output level and cyclic output enabling/disabling with TOCR.
16. Set reset-synchronized PWM.
17. Enable channel 3 and 4 output with TOER.
18. Set the multi-function timer pulse unit 2 output with the general I/O port.
19. Operation is restarted by TSTR.

chanhvinh.com

(13) Operation when Error Occurs during PWM Mode 2 Operation, and Operation is Restarted in Normal Mode

Figure 12.127 shows an explanatory diagram of the case where an error occurs in PWM mode 2 and operation is restarted in normal mode after re-setting.

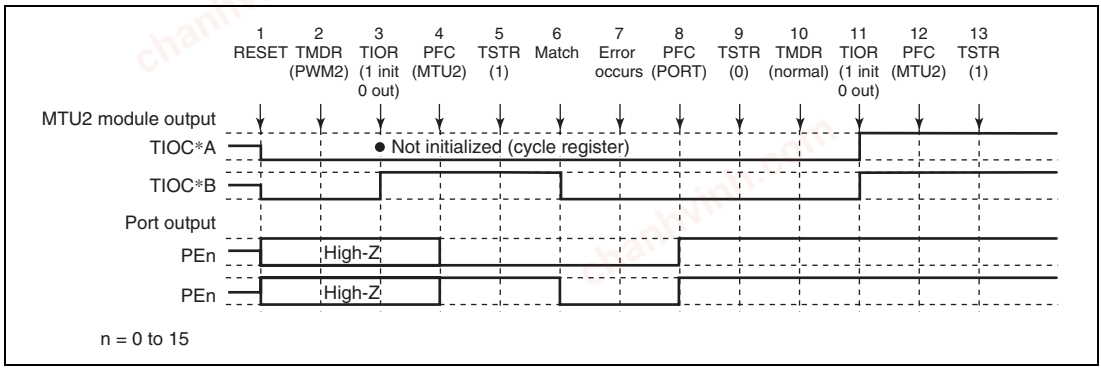

Figure 12.127 Error Occurrence in PWM Mode 2, Recovery in Normal Mode

1. After a reset, the module output is low and ports are in the high-impedance state.
2. Set PWM mode 2.
3. Initialize the pins with TIOR. (The example shows initial high output, with low output on compare-match occurrence. In PWM mode 2, the cycle register pins are not initialized. In the example, TIOC *A is the cycle register.)
4. Set the multi-function timer pulse unit 2 output with the general I/O port.
5. The count operation is started by TSTR.
6. Output goes low on compare-match occurrence.
7. An error occurs.
8. Set port output with the general I/O port and output the inverse of the active level.
9. The count operation is stopped by TSTR.
10. Set normal mode.
11. Initialize the pins with TIOR.
12. Set the multi-function timer pulse unit 2 output with the general I/O port.
13. Operation is restarted by TSTR.

chanhvinh.com

(14) Operation when Error Occurs during PWM Mode 2 Operation, and Operation is Restarted in PWM Mode 1

Figure 12.128 shows an explanatory diagram of the case where an error occurs in PWM mode 2 and operation is restarted in PWM mode 1 after re-setting.

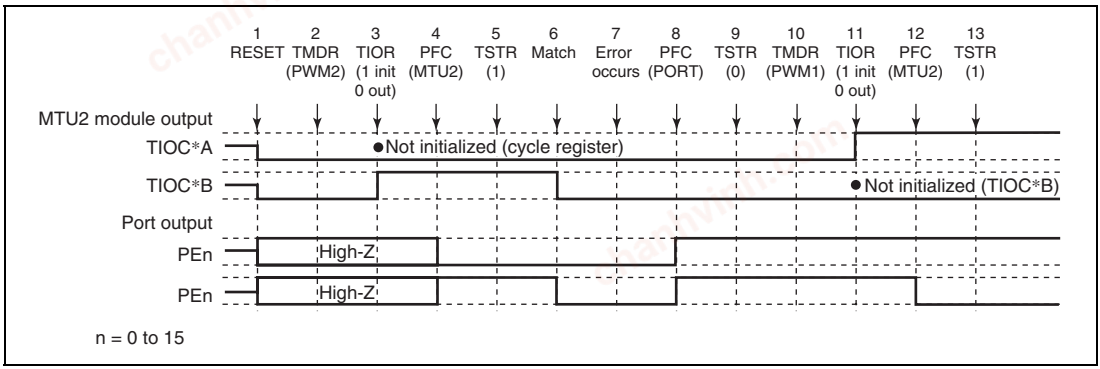

Figure 12.128 Error Occurrence in PWM Mode 2, Recovery in PWM Mode 1

1 to 9 are the same as in figure 12.127.

10. Set PWM mode 1.
11. Initialize the pins with TIOR. (In PWM mode 1, the TIOC*B side is not initialized.)
12. Set the multi-function timer pulse unit 2 output with the general I/O port.
13. Operation is restarted by TSTR.

chanhvinh.com

(15) Operation when Error Occurs during PWM Mode 2 Operation, and Operation is Restarted in PWM Mode 2

Figure 12.129 shows an explanatory diagram of the case where an error occurs in PWM mode 2 and operation is restarted in PWM mode 2 after re-setting.

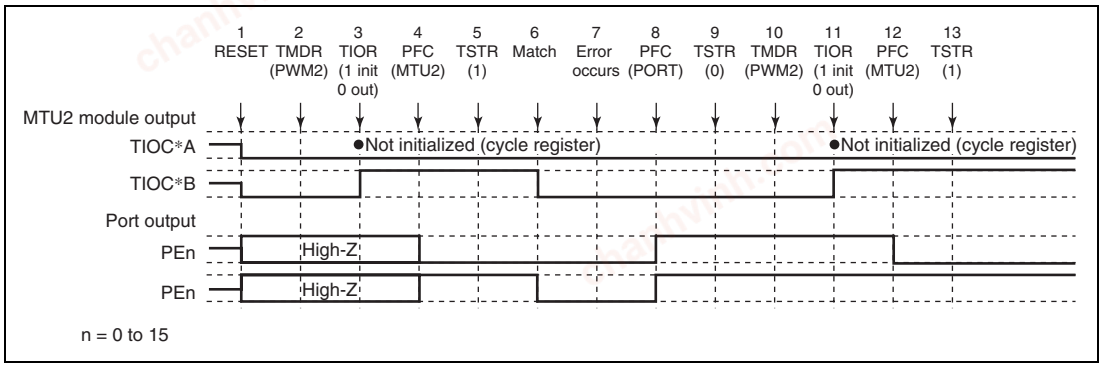

Figure 12.129 Error Occurrence in PWM Mode 2, Recovery in PWM Mode 2

1 to 9 are the same as in figure 12.127.

10. Not necessary when restarting in PWM mode 2.
11. Initialize the pins with TIOR. (In PWM mode 2, the cycle register pins are not initialized.)
12. Set the multi-function timer pulse unit 2 output with the general I/O port.
13. Operation is restarted by TSTR.

chanhvinh.com

(16) Operation when Error Occurs during PWM Mode 2 Operation, and Operation is Restarted in Phase Counting Mode

Figure 12.130 shows an explanatory diagram of the case where an error occurs in PWM mode 2 and operation is restarted in phase counting mode after re-setting.

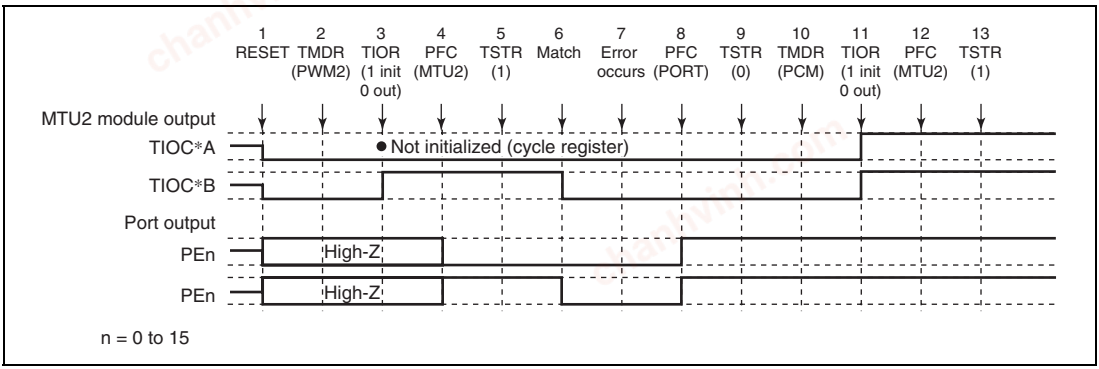

Figure 12.130 Error Occurrence in PWM Mode 2, Recovery in Phase Counting Mode

1 to 9 are the same as in figure 12.127.

10. Set phase counting mode.
11. Initialize the pins with TIOR.
12. Set the multi-function timer pulse unit 2 output with the general I/O port.
13. Operation is restarted by TSTR.

chanhvinh.com

(17) Operation when Error Occurs during Phase Counting Mode Operation, and Operation is Restarted in Normal Mode

Figure 12.131 shows an explanatory diagram of the case where an error occurs in phase counting mode and operation is restarted in normal mode after re-setting.

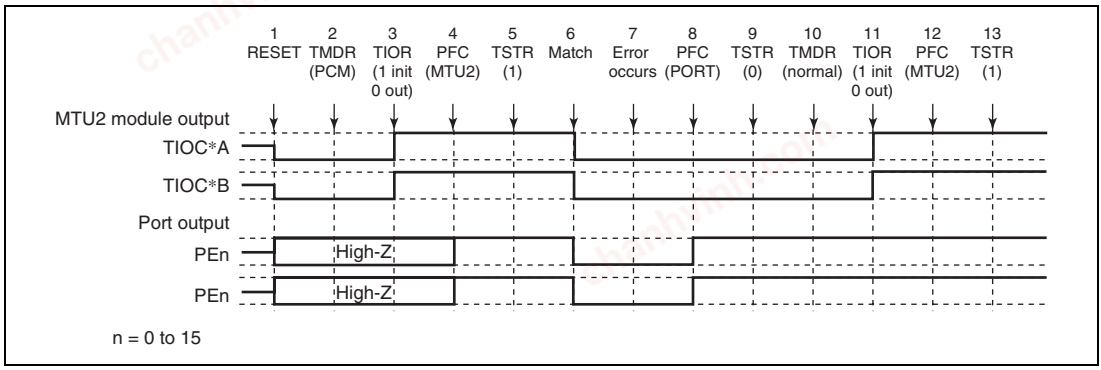

Figure 12.131 Error Occurrence in Phase Counting Mode, Recovery in Normal Mode

1. After a reset, the module output is low and ports are in the high-impedance state.
2. Set phase counting mode.
3. Initialize the pins with TIOR. (The example shows initial high output, with low output on compare-match occurrence.)
4. Set the multi-function timer pulse unit 2 output with the general I/O port.
5. The count operation is started by TSTR.
6. Output goes low on compare-match occurrence.
7. An error occurs.
8. Set port output with the general I/O port and output the inverse of the active level.
9. The count operation is stopped by TSTR.
10. Set in normal mode.
11. Initialize the pins with TIOR.
12. Set the multi-function timer pulse unit 2 output with the general I/O port.
13. Operation is restarted by TSTR.

chanhvinh.com

(18) Operation when Error Occurs during Phase Counting Mode Operation, and Operation is Restarted in PWM Mode 1

Figure 12.132 shows an explanatory diagram of the case where an error occurs in phase counting mode and operation is restarted in PWM mode 1 after re-setting.

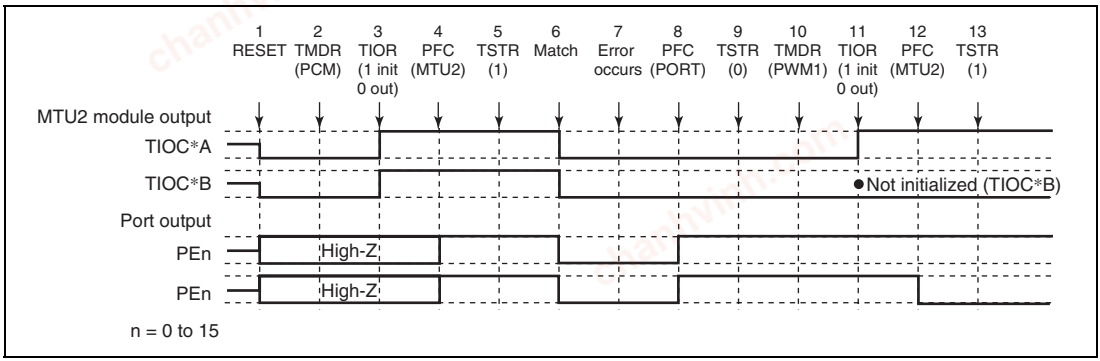

Figure 12.132 Error Occurrence in Phase Counting Mode, Recovery in PWM Mode 1

1 to 9 are the same as in figure 12.131.

10. Set PWM mode 1.
11. Initialize the pins with TIOR. (In PWM mode 1, the TIOC *B side is not initialized.)
12. Set the multi-function timer pulse unit 2 output with the general I/O port.
13. Operation is restarted by TSTR.

chanhvinh.com

(19) Operation when Error Occurs during Phase Counting Mode Operation, and Operation is Restarted in PWM Mode 2

Figure 12.133 shows an explanatory diagram of the case where an error occurs in phase counting mode and operation is restarted in PWM mode 2 after re-setting.

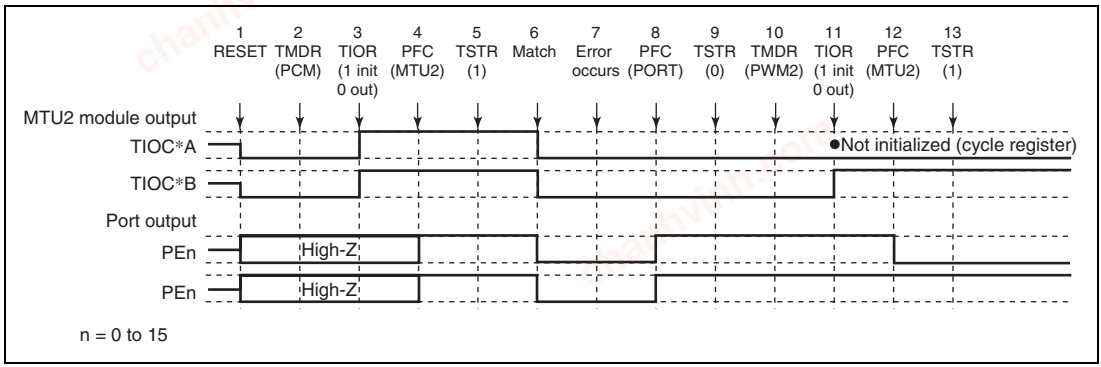

Figure 12.133 Error Occurrence in Phase Counting Mode, Recovery in PWM Mode 2

1 to 9 are the same as in figure 12.131.

10. Set PWM mode 2.
11. Initialize the pins with TIOR. (In PWM mode 2, the cycle register pins are not initialized.)
12. Set the multi-function timer pulse unit 2 output with the general I/O port.
13. Operation is restarted by TSTR.

chanhvinh.com

(20) Operation when Error Occurs during Phase Counting Mode Operation, and Operation is Restarted in Phase Counting Mode

Figure 12.134 shows an explanatory diagram of the case where an error occurs in phase counting mode and operation is restarted in phase counting mode after re-setting.

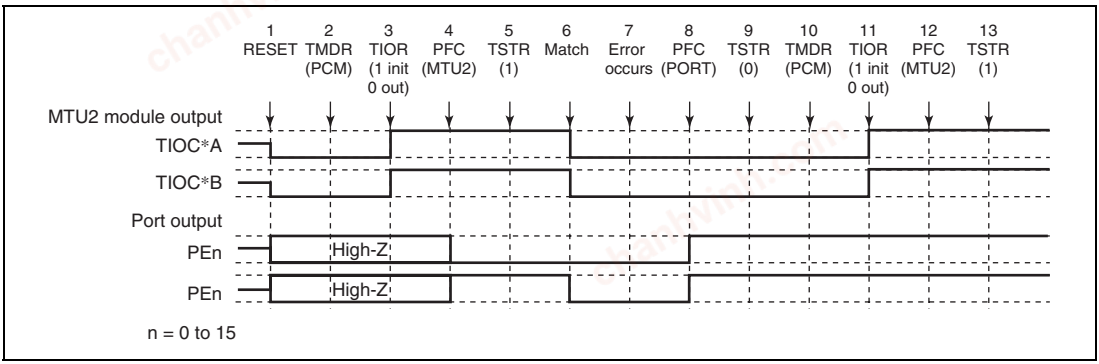

Figure 12.134 Error Occurrence in Phase Counting Mode, Recovery in Phase Counting Mode

1 to 9 are the same as in figure 12.131.

10. Not necessary when restarting in phase counting mode.
11. Initialize the pins with TIOR.
12. Set the multi-function timer pulse unit 2 output with the general I/O port.
13. Operation is restarted by TSTR.

chanhvinh.com

(21) Operation when Error Occurs during Complementary PWM Mode Operation, and Operation is Restarted in Normal Mode

Figure 12.135 shows an explanatory diagram of the case where an error occurs in complementary PWM mode and operation is restarted in normal mode after re-setting.

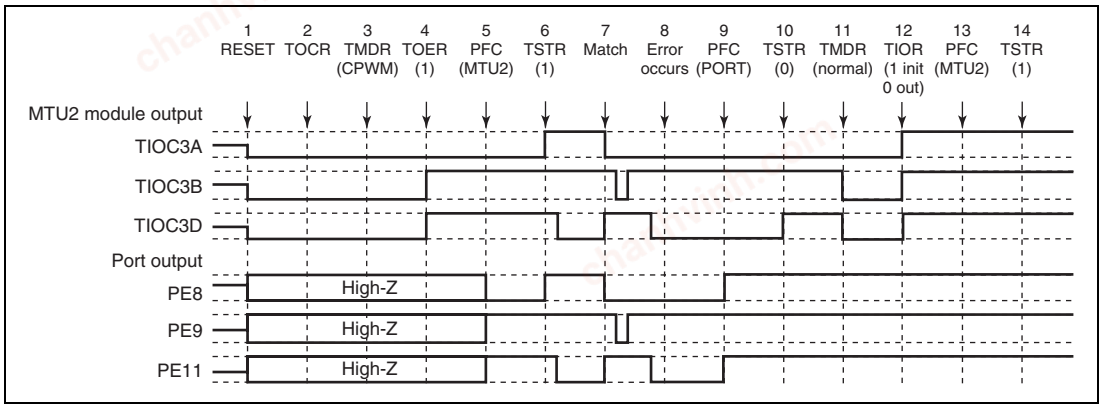

Figure 12.135 Error Occurrence in Complementary PWM Mode, Recovery in Normal Mode

1. After a reset, the module output is low and ports are in the high-impedance state.
2. Select the complementary PWM output level and cyclic output enabling/disabling with TOCR.
3. Set complementary PWM.
4. Enable channel 3 and 4 output with TOER.
5. Set the multi-function timer pulse unit 2 output with the general I/O port.
6. The count operation is started by TSTR.
7. The complementary PWM waveform is output on compare-match occurrence.
8. An error occurs.
9. Set port output with the general I/O port and output the inverse of the active level.
10. The count operation is stopped by TSTR. (This module outputs the same value as the complementary PWM output initial value.)
11. Set normal mode. (This module outputs a low-level signal.)
12. Initialize the pins with TIOR.
13. Set the multi-function timer pulse unit 2 output with the general I/O port.
14. Operation is restarted by TSTR.

chanhvinh.com

(22) Operation when Error Occurs during Complementary PWM Mode Operation, and Operation is Restarted in PWM Mode 1

Figure 12.136 shows an explanatory diagram of the case where an error occurs in complementary PWM mode and operation is restarted in PWM mode 1 after re-setting.

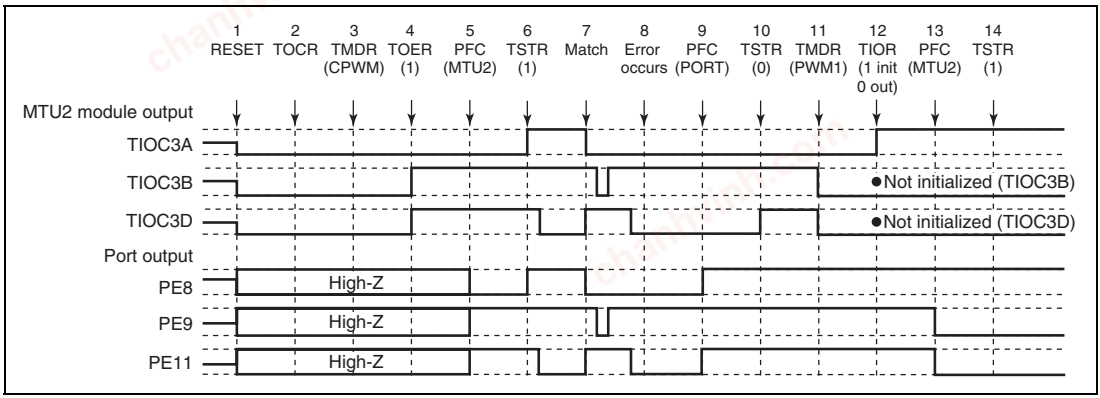

Figure 12.136 Error Occurrence in Complementary PWM Mode, Recovery in PWM Mode 1

1 to 10 are the same as in figure 12.135.

11. Set PWM mode 1. (This module outputs a low-level signal.)
12. Initialize the pins with TIOR. (In PWM mode 1, the TIOC *B side is not initialized.)
13. Set the multi-function timer pulse unit 2 output with the general I/O port.
14. Operation is restarted by TSTR.

chanhvinh.com

(23) Operation when Error Occurs during Complementary PWM Mode Operation, and Operation is Restarted in Complementary PWM Mode

Figure 12.137 shows an explanatory diagram of the case where an error occurs in complementary PWM mode and operation is restarted in complementary PWM mode after re-setting (when operation is restarted using the cycle and duty settings at the time the counter was stopped).

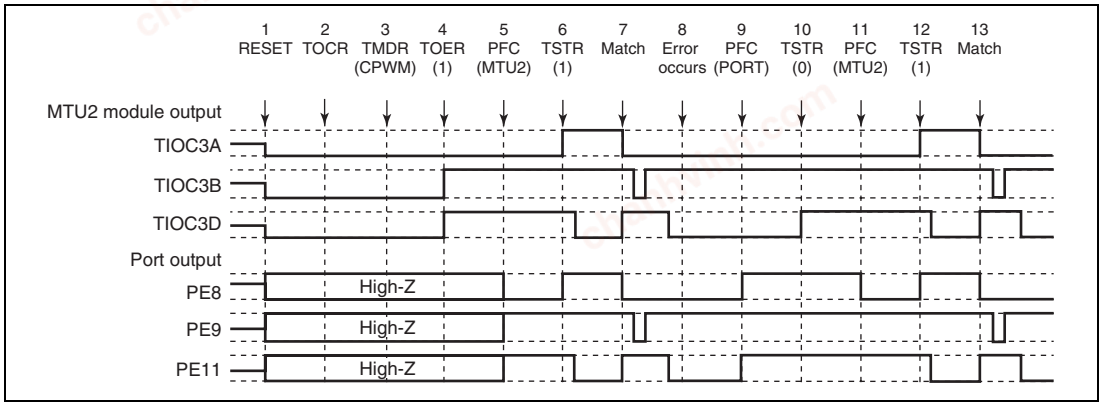

Figure 12.137 Error Occurrence in Complementary PWM Mode, Recovery in Complementary PWM Mode

1 to 10 are the same as in figure 12.135.

11. Set the multi-function timer pulse unit 2 output with the general I/O port.
12. Operation is restarted by TSTR.
13. The complementary PWM waveform is output on compare-match occurrence.

chanhvinh.com

(24) Operation when Error Occurs during Complementary PWM Mode Operation, and Operation is Restarted in Complementary PWM Mode

Figure 12.138 shows an explanatory diagram of the case where an error occurs in complementary PWM mode and operation is restarted in complementary PWM mode after re-setting (when operation is restarted using completely new cycle and duty settings).

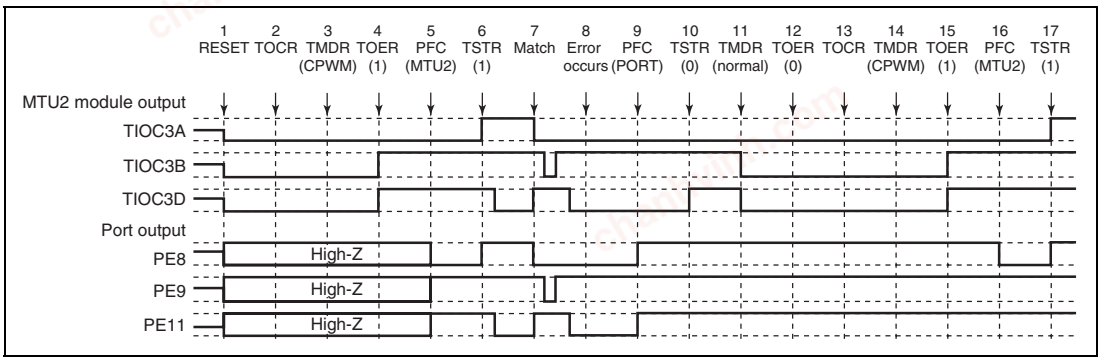

Figure 12.138 Error Occurrence in Complementary PWM Mode, Recovery in Complementary PWM Mode

1 to 10 are the same as in figure 12.135.

11. Set normal mode and make new settings. (This module outputs a low-level signal.)
12. Disable channel 3 and 4 output with TOER.
13. Select the complementary PWM mode output level and cyclic output enabling/disabling with TOCR.
14. Set complementary PWM.
15. Enable channel 3 and 4 output with TOER.
16. Set the multi-function timer pulse unit 2 output with the general I/O port.
17. Operation is restarted by TSTR.

chanhvinh.com

(25) Operation when Error Occurs during Complementary PWM Mode Operation, and Operation is Restarted in Reset-Synchronized PWM Mode

Figure 12.139 shows an explanatory diagram of the case where an error occurs in complementary PWM mode and operation is restarted in reset-synchronized PWM mode.

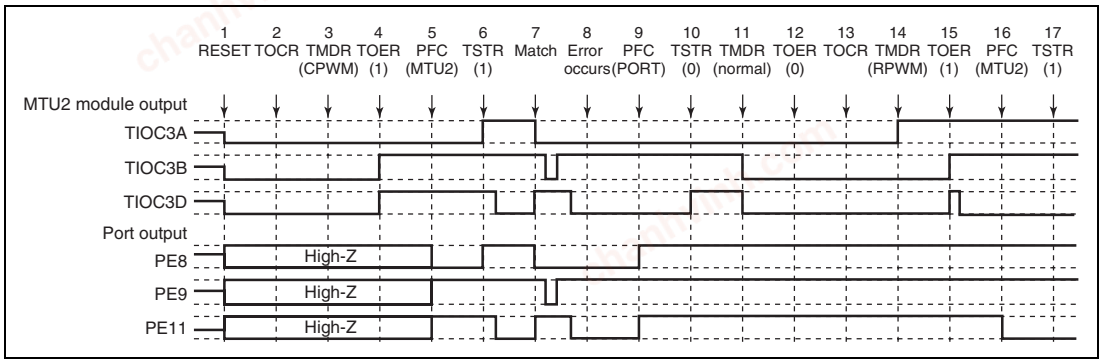

Figure 12.139 Error Occurrence in Complementary PWM Mode, Recovery in Reset-Synchronized PWM Mode

1 to 10 are the same as in figure 12.135.

11. Set normal mode. (This module outputs a low-level signal.)
12. Disable channel 3 and 4 output with TOER.
13. Select the reset-synchronized PWM mode output level and cyclic output enabling/disabling with TOCR.
14. Set reset-synchronized PWM.
15. Enable channel 3 and 4 output with TOER.
16. Set the multi-function timer pulse unit 2 output with the general I/O port.
17. Operation is restarted by TSTR.

chanhvinh.com

(26) Operation when Error Occurs during Reset-Synchronized PWM Mode Operation, and Operation is Restarted in Normal Mode

Figure 12.140 shows an explanatory diagram of the case where an error occurs in reset-synchronized PWM mode and operation is restarted in normal mode after re-setting.

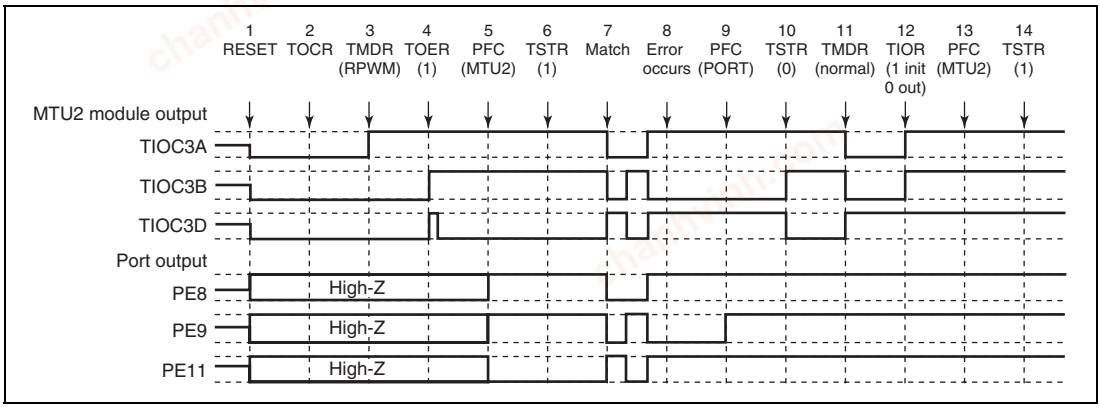

Figure 12.140 Error Occurrence in Reset-Synchronized PWM Mode, Recovery in Normal Mode

1. After a reset, the module output is low and ports are in the high-impedance state.
2. Select the reset-synchronized PWM output level and cyclic output enabling/disabling with TOCR.
3. Set reset-synchronized PWM.
4. Enable channel 3 and 4 output with TOER.
5. Set the multi-function timer pulse unit 2 output with the general I/O port.
6. The count operation is started by TSTR.
7. The reset-synchronized PWM waveform is output on compare-match occurrence.
8. An error occurs.
9. Set port output with the general I/O port and output the inverse of the active level.
10. The count operation is stopped by TSTR. (This module outputs the same value as the reset-synchronized PWM output initial value.)
11. Set normal mode. (The positive phase output from this module is low, and negative phase output is high.)
12. Initialize the pins with TIOR.
13. Set the multi-function timer pulse unit 2 output with the general I/O port.
14. Operation is restarted by TSTR.

chanhvinh.com

(27) Operation when Error Occurs during Reset-Synchronized PWM Mode Operation, and Operation is Restarted in PWM Mode 1

Figure 12.141 shows an explanatory diagram of the case where an error occurs in reset-synchronized PWM mode and operation is restarted in PWM mode 1 after re-setting.

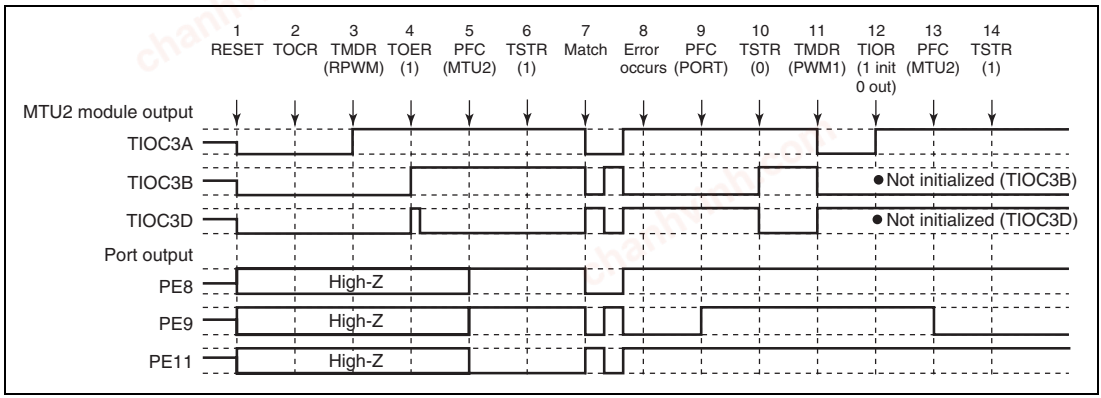

Figure 12.141 Error Occurrence in Reset-Synchronized PWM Mode, Recovery in PWM Mode 1

1 to 10 are the same as in figure 12.140.

11. Set PWM mode 1. (The positive phase output from this module is low, and negative phase output is high.)
12. Initialize the pins with TIOR. (In PWM mode 1, the TIOC *B side is not initialized.)
13. Set the multi-function timer pulse unit 2 output with the general I/O port.
14. Operation is restarted by TSTR.

chanhvinh.com

(28) Operation when Error Occurs during Reset-Synchronized PWM Mode Operation, and Operation is Restarted in Complementary PWM Mode

Figure 12.142 shows an explanatory diagram of the case where an error occurs in reset-synchronized PWM mode and operation is restarted in complementary PWM mode after re-setting.

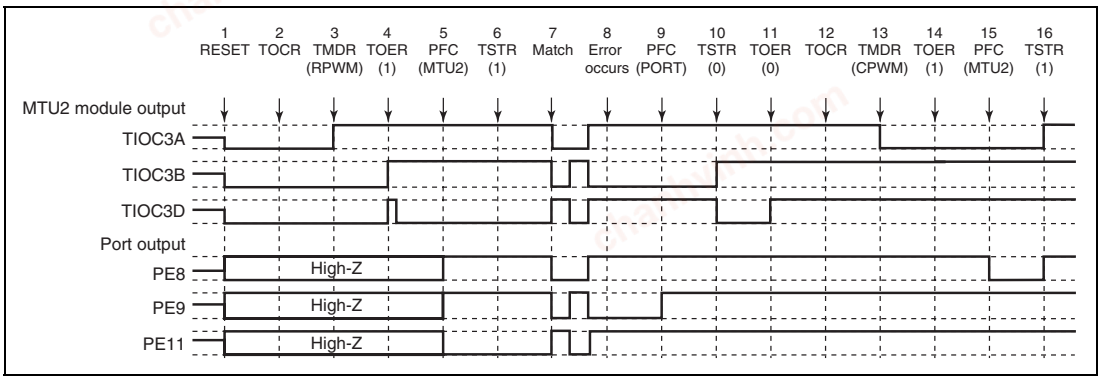

Figure 12.142 Error Occurrence in Reset-Synchronized PWM Mode, Recovery in Complementary PWM Mode

1 to 10 are the same as in figure 12.140.

11. Disable channel 3 and 4 output with TOER.
12. Select the complementary PWM output level and cyclic output enabling/disabling with TOCR.
13. Set complementary PWM. (The cyclic output pin of this module outputs a low-level signal.)
14. Enable channel 3 and 4 output with TOER.
15. Set the multi-function timer pulse unit 2 output with the general I/O port.
16. Operation is restarted by TSTR.

chanhvinh.com

(29) Operation when Error Occurs during Reset-Synchronized PWM Mode Operation, and Operation is Restarted in Reset-Synchronized PWM Mode

Figure 12.143 shows an explanatory diagram of the case where an error occurs in reset-synchronized PWM mode and operation is restarted in reset-synchronized PWM mode after re-setting.

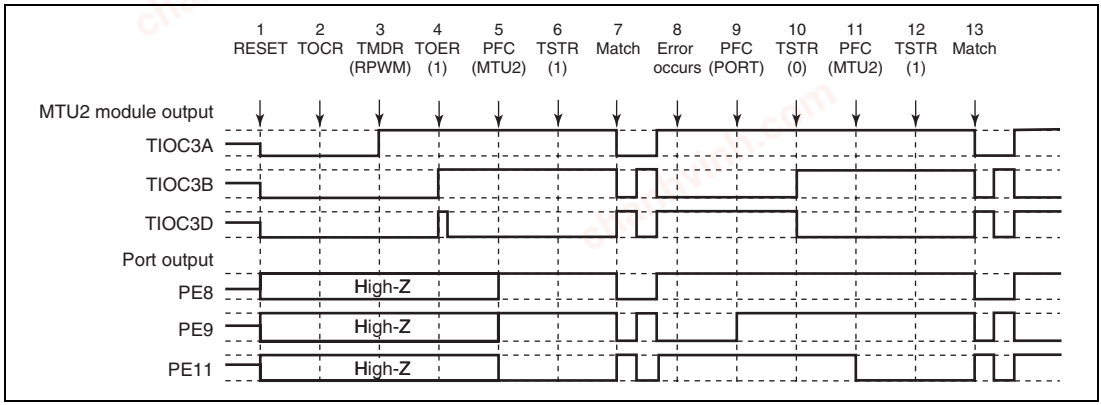

Figure 12.143 Error Occurrence in Reset-Synchronized PWM Mode, Recovery in Reset-Synchronized PWM Mode

1 to 10 are the same as in figure 12.140.

11. Set the multi-function timer pulse unit 2 output with the general I/O port.
12. Operation is restarted by TSTR.
13. The reset-synchronized PWM waveform is output on compare-match occurrence.

chanhvinh.com

chanhvinh.com
chanhvinh.com
chanhvinh.com

chanhvinh.com

Section 13 Compare Match Timer

This LSI has an on-chip compare match timer module consisting of two-channel 16-bit timers. This module has a 16-bit counter, and can generate interrupts at set intervals.

13.1 Features

- Independent selection of four counter input clocks at two channels
  Any of four internal clocks (P0ϕ/8, P0ϕ/32, P0ϕ/128, and P0ϕ/512) can be selected.
- Selection of DMA transfer request or interrupt request generation on compare match by direct memory access controller setting
- When not in use, this module can be stopped by halting its clock supply to reduce power consumption.

Figure 13.1 shows a block diagram.

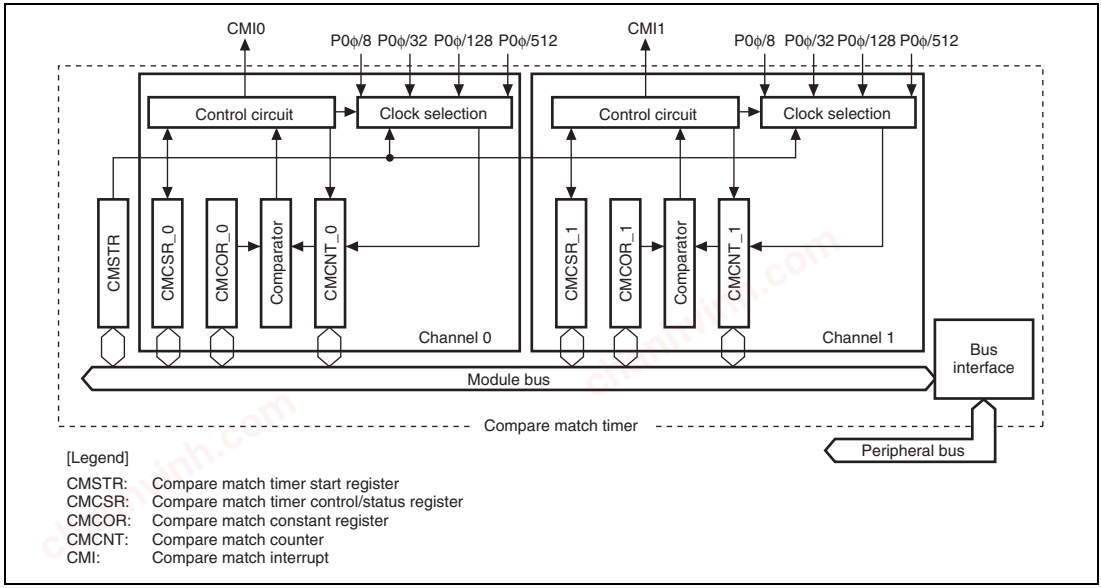

Figure 13.1 Block Diagram

chanhvinh.com

13.2 Register Descriptions

Table 13.1 shows the register configuration.

Table 13.1 Register Configuration

Channel	Register Name	Abbreviation	R/W	Initial Value	Address	Access Size
Common	Compare match timer start register	CMSTR	R/W	H'0000	H'FFFEC000	16
0	Compare match timer control/ status register_0	CMCSR_0	R/W	H'0000	H'FFFEC002	16
	Compare match counter_0	CMCNT_0	R/W	H'0000	H'FFFEC004	8, 16
	Compare match constant register_0	CMCOR_0	R/W	H'FFFF	H'FFFEC006	8, 16
1	Compare match timer control/ status register_1	CMCSR_1	R/W	H'0000	H'FFFEC008	16
	Compare match counter_1	CMCNT_1	R/W	H'0000	H'FFFEC00A	8, 16
	Compare match constant register_1	CMCOR_1	R/W	H'FFFF	H'FFFEC00C	8, 16

chanhvinh.com

13.2.1 Compare Match Timer Start Register (CMSTR)

CMSTR is a 16-bit register that selects whether compare match counter (CMCNT) operates or is stopped.

Bit:	15	14	13	12	11	10	9	8	7	6	5	4	3	2	1	0
	-	-	-	-	-	-	-	-	-	-	-	-	-	-	STR1	STR0
Initial value:	0	0	0	0	0	0	0	0	0	0	0	0	0	0	0	0
R/W:	R	R	R	R	R	R	R	R	R	R	R	R	R	R	R/W	R/W

Bit	Bit Name	Initial Value	R/W	Description
15 to 2	—	All 0	R	Reserved These bits are always read as 0. The write value should always be 0.
1	STR1	0	R/W	Count Start 1 Specifies whether compare match counter_1 operates or is stopped. 0: Counting by CMCNT_1 is stopped 1: Counting by CMCNT_1 is started
0	STR0	0	R/W	Count Start 0 Specifies whether compare match counter_0 operates or is stopped. 0: Counting by CMCNT_0 is stopped 1: Counting by CMCNT_0 is started

chanhvinh.com

13.2.2 Compare Match Timer Control/Status Register (CMCSR)

CMCSR is a 16-bit register that indicates compare match generation, enables or disables interrupts, and selects the counter input clock.

Bit:	15	14	13	12	11	10	9	8	7	6	5	4	3	2	1	0
	-	-	-	-	-	-	-	-	CMF	CMIE	-	-	-	-	CKS[1:0]	
Initial value:	0	0	0	0	0	0	0	0	0	0	0	0	0	0	0	0
R/W:	R	R	R	R	R	R	R	R	R/(W)*	R/W	R	R	R	R	R/W	R/W

Bit	Bit Name	Initial Value	R/W	Description
15 to 8	—	All 0	R	Reserved These bits are always read as 0. The write value should always be 0.
7	CMF	0	R/(W)*	Compare Match Flag Indicates whether or not the values of CMCNT and CMCOR match. 0: CMCNT and CMCOR values do not match [Clearing condition] • When 0 is written to CMF after reading CMF = 1 1: CMCNT and CMCOR values match
6	CMIE	0	R/W	Compare Match Interrupt Enable Enables or disables compare match interrupt (CMI) generation when CMCNT and CMCOR values match (CMF = 1). 0: Compare match interrupt (CMI) disabled 1: Compare match interrupt (CMI) enabled
5 to 2	—	All 0	R	Reserved These bits are always read as 0. The write value should always be 0.

chanhvinh.com

Bit	Bit Name	Initial Value	R/W	Description
1, 0	CKS[1:0]	00	R/W	Clock Select These bits select the clock to be input to CMCNT from four internal clocks obtained by dividing the peripheral clock (P0ϕ). When the STR bit in CMSTR is set to 1, CMCNT starts counting on the clock selected with bits CKS[1:0]. 00: P0ϕ/8 01: P0ϕ/32 10: P0ϕ/128 11: P0ϕ/512

Note: * Only 0 can be written to clear the flag after 1 is read.

chanhvinh.com

13.2.3 Compare Match Counter (CMCNT)

CMCNT is a 16-bit register used as an up-counter. When the counter input clock is selected with bits CKS[1:0] in CMCSR, and the STR bit in CMSTR is set to 1, CMCNT starts counting using the selected clock. When the value in CMCNT and the value in compare match constant register (CMCOR) match, CMCNT is cleared to H'0000 and the CMF flag in CMCSR is set to 1.

CMCNT is initialized to H'0000 by clearing any channels of the counter start bit from 1 to 0 in the compare match timer start register (CMSTR).

Bit:	15	14	13	12	11	10	9	8	7	6	5	4	3	2	1	0
Initial value:	0	0	0	0	0	0	0	0	0	0	0	0	0	0	0	0
R/W:	R/W	R/W	R/W	R/W	R/W	R/W	R/W	R/W	R/W	R/W	R/W	R/W	R/W	R/W	R/W	R/W

13.2.4 Compare Match Constant Register (CMCOR)

CMCOR is a 16-bit register that sets the interval up to a compare match with CMCNT.

Bit:	15	14	13	12	11	10	9	8	7	6	5	4	3	2	1	0
Initial value:	1	1	1	1	1	1	1	1	1	1	1	1	1	1	1	1
R/W:	R/W	R/W	R/W	R/W	R/W	R/W	R/W	R/W	R/W	R/W	R/W	R/W	R/W	R/W	R/W	R/W

chanhvinh.com

13.3 Operation

13.3.1 Interval Count Operation

When an internal clock is selected with the CKS[1:0] bits in CMCSR and the STR bit in CMSTR is set to 1, CMCNT starts incrementing using the selected clock. When the values in CMCNT and CMCOR match, CMCNT is cleared to H'0000 and the CMF flag in CMCSR is set to 1. When the CMIE bit in CMCSR is set to 1 at this time, a compare match interrupt (CMI) is requested. CMCNT then starts counting up again from H'0000.

Figure 13.2 shows the operation of the compare match counter.

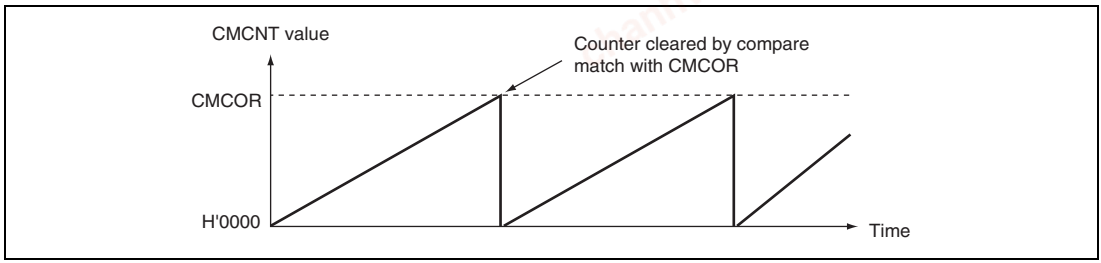

Figure 13.2 Counter Operation

13.3.2 CMCNT Count Timing

One of four clocks (P0ϕ/8, P0ϕ/32, P0ϕ/128, and P0ϕ/512) obtained by dividing the peripheral clock (P0ϕ) can be selected with the CKS1 and CKS0 bits in CMCSR. Figure 13.3 shows the timing.

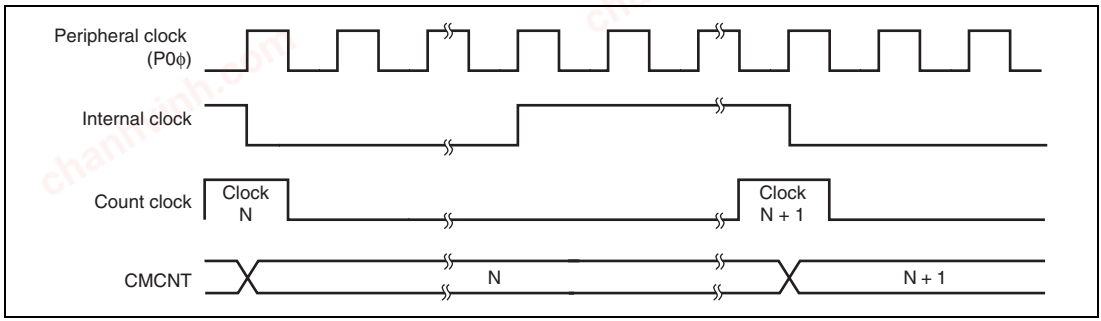

Figure 13.3 Count Timing

chanhvinh.com

13.4 Interrupts

13.4.1 Interrupt Sources and DMA Transfer Requests

This module has channels and each of them to which a different vector address is allocated has a compare match interrupt. When both the compare match flag (CMF) and the interrupt enable bit (CMIE) are set to 1, the corresponding interrupt request is output. When the interrupt is used to activate a CPU interrupt, the priority of channels can be changed by the interrupt controller settings. For details, see section 7, Interrupt Controller.

Clear the CMF bit to 0 by the user exception handling routine. If this operation is not carried out, another interrupt will be generated. By setting the interrupt controller, the direct memory access controller can be activated when a compare match interrupt is requested. In this case, an interrupt is not issued to the CPU. If the setting to activate the direct memory access controller has not been made, an interrupt request is sent to the CPU. The CMF bit is automatically cleared to 0 when data is transferred by the direct memory access controller.

13.4.2 Timing of Compare Match Flag Setting

When CMCOR and CMCNT match, a compare match signal is generated at the last state in which the values match (the timing when the CMCNT value is updated to H'0000) and the CMF bit in CMCSR is set to 1. That is, after a match between CMCOR and CMCNT, the compare match signal is not generated until the next CMCNT counter clock input. Figure 13.4 shows the timing of CMF bit setting.

chanhvinh.com

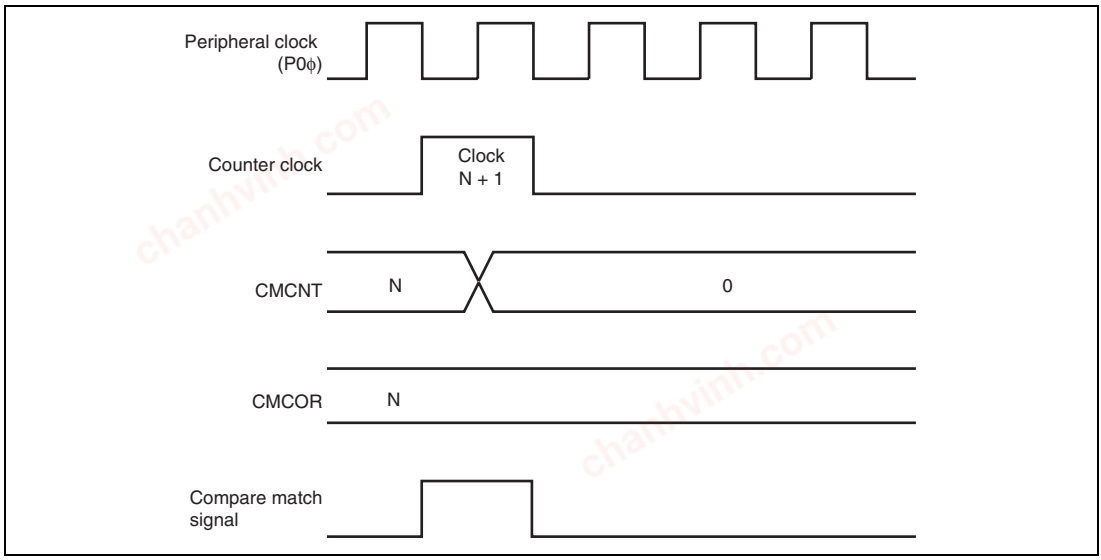

Figure 13.4 Timing of CMF Setting

13.4.3 Timing of Compare Match Flag Clearing

The CMF bit in CMCSR is cleared by first, reading as 1 then writing to 0. However, in the case of the direct memory access controller being activated, the CMF bit is automatically cleared to 0 when data is transferred by the direct memory access controller.

chanhvinh.com

13.5 Usage Notes

13.5.1 Conflict between Write and Compare-Match Processes of CMCNT

When the compare match signal is generated in the T2 cycle while writing to CMCNT, clearing CMCNT has priority over writing to it. In this case, CMCNT is not written to. Figure 13.5 shows the timing to clear the CMCNT counter.

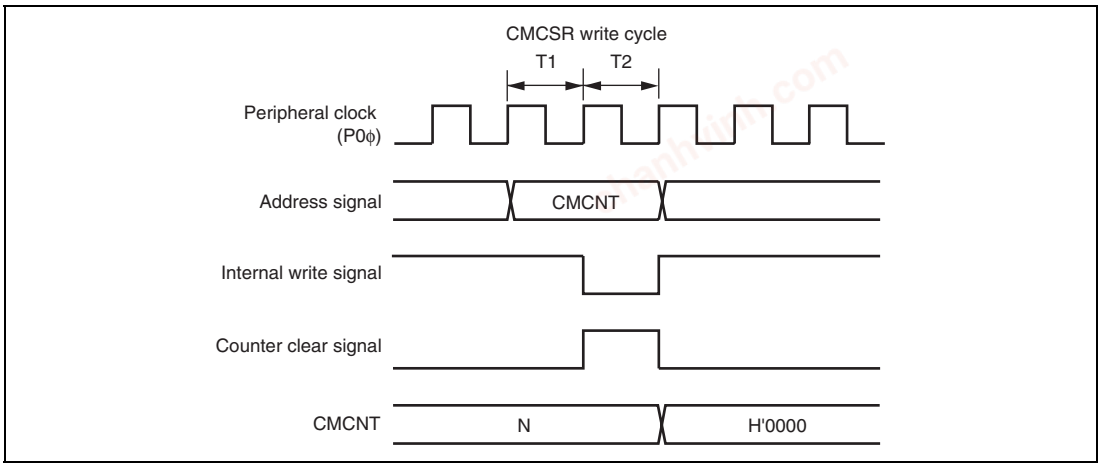

Figure 13.5 Conflict between Write and Compare Match Processes of CMCNT

chanhvinh.com

13.5.2 Conflict between Word-Write and Count-Up Processes of CMCNT

Even when the count-up occurs in the T2 cycle while writing to CMCNT in words, the writing has priority over the count-up. In this case, the count-up is not performed. Figure 13.6 shows the timing to write to CMCNT in words.

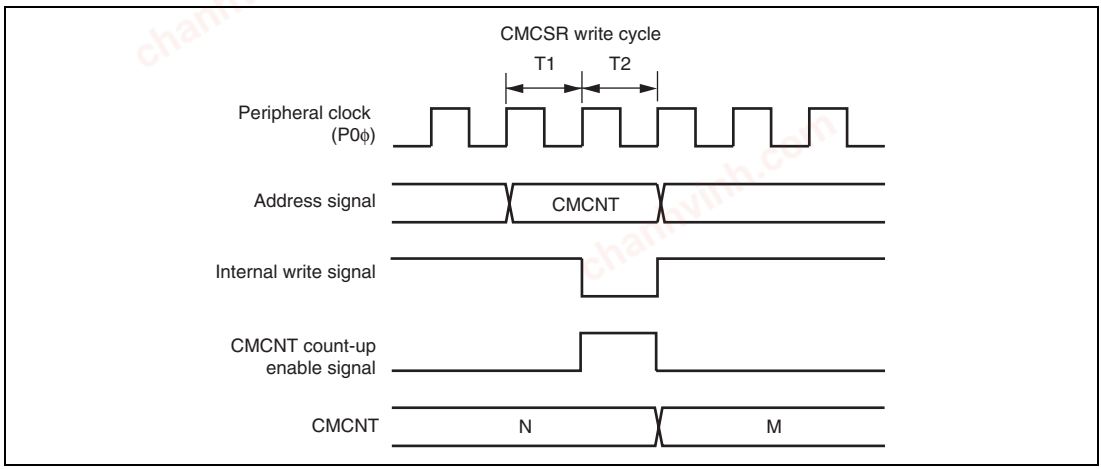

Figure 13.6 Conflict between Word-Write and Count-Up Processes of CMCNT

chanhvinh.com

13.5.3 Conflict between Byte-Write and Count-Up Processes of CMCNT

Even when the count-up occurs in the T2 cycle while writing to CMCNT in bytes, the writing has priority over the count-up. In this case, the count-up is not performed. The byte data on the other side, which is not written to, is also not counted and the previous contents are retained.

Figure 13.7 shows the timing when the count-up occurs in the T2 cycle while writing to CMCNTH in bytes.

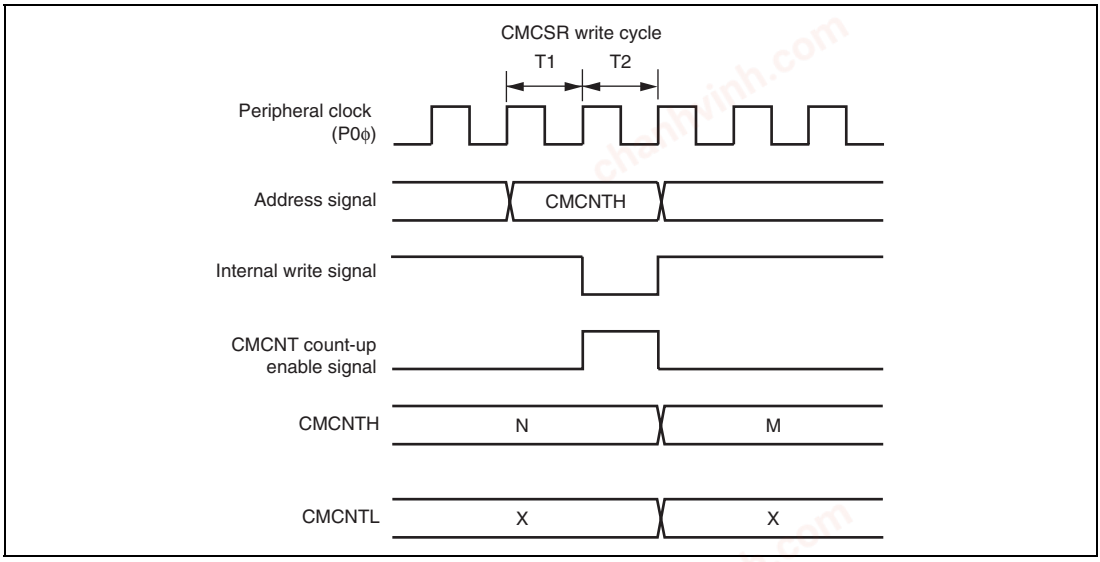

Figure 13.7 Conflict between Byte-Write and Count-Up Processes of CMCNT

13.5.4 Compare Match between CMCNT and CMCOR

Do not set the same value in CMCNT and CMCOR while CMCNT is not counting.

chanhvinh.com

Section 14 Watchdog Timer

This LSI includes the watchdog timer, which externally outputs an overflow signal ($\overline{\text{WDTOVF}}$) on overflow of the counter when the value of the counter has not been updated because of a system malfunction. This module can simultaneously generate an internal reset signal for the entire LSI.

This module is a single channel timer that counts up the clock oscillation settling period when the system leaves software standby mode. It can also be used as a general watchdog timer or interval timer.

14.1 Features

- Can be used to ensure the clock oscillation settling time
  This module is used in leaving software standby mode.
- Can switch between watchdog timer mode and interval timer mode.
- Outputs $\overline{\text{WDTOVF}}$ signal in watchdog timer mode
  When the counter overflows in watchdog timer mode, the $\overline{\text{WDTOVF}}$ signal is output externally. It is possible to select whether to reset the LSI internally when this happens. Either the power-on reset or manual reset signal can be selected as the internal reset type.
- Interrupt generation in interval timer mode
  An interval timer interrupt is generated when the counter overflows.
- Choice of eight counter input clocks
  Eight clocks (P0ϕ × 1 to P0ϕ × 1/16384) that are obtained by dividing the peripheral clock can be selected.

chanhvinh.com

Figure 14.1 shows a block diagram.

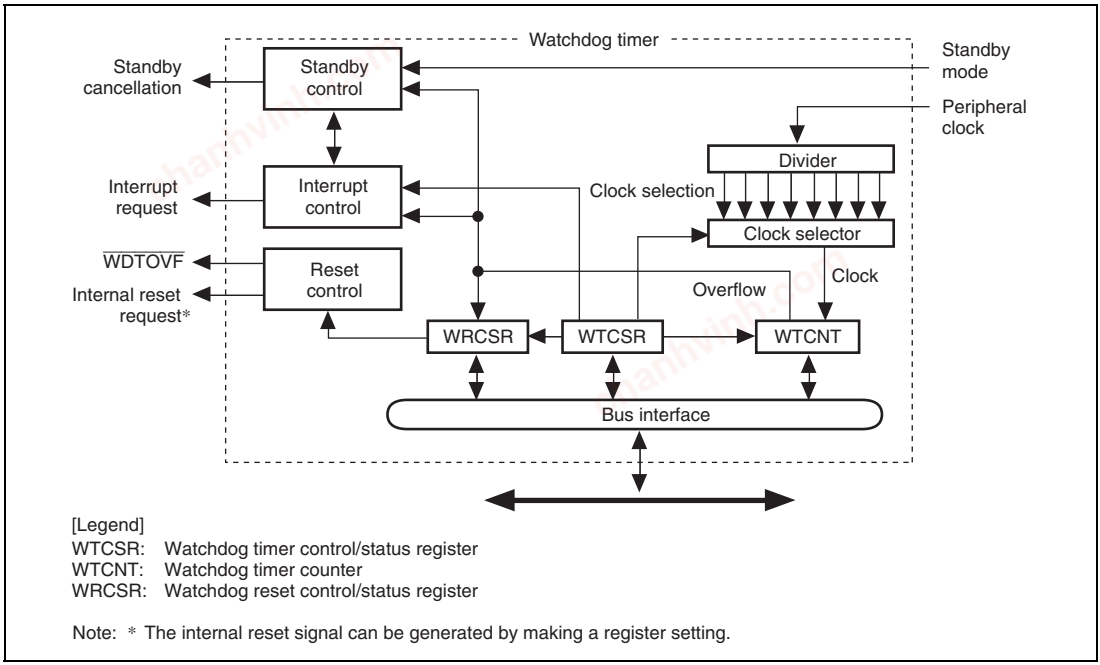

Figure 14.1 Block Diagram

14.2 Input/Output Pin

Table 14.1 shows the pin configuration.

Table 14.1 Pin Configuration

Pin Name	Symbol	I/O	Function
Watchdog timer overflow	$\overline{\text{WDTOVF}}$	Output	Outputs the counter overflow signal in watchdog timer mode

chanhvinh.com

14.3 Register Descriptions

Table 14.2 shows the register configuration.

Table 14.2 Register Configuration

Register Name	Abbreviation	R/W	Initial Value	Address	Access Size
Watchdog timer counter	WTCNT	R/W	H'00	H'FFFE0002	16*
Watchdog timer control/status register	WTCSR	R/W	H'18	H'FFFE0000	16*
Watchdog reset control/status register	WRCSR	R/W	H'1F	H'FFFE0004	16*

Note: * For the access size, see section 14.3.4, Notes on Register Access.

14.3.1 Watchdog Timer Counter (WTCNT)

WTCNT is an 8-bit readable/writable register that is incremented by cycles of the selected clock signal. When an overflow occurs, it generates a watchdog timer overflow signal ($\overline{\text{WDTOVF}}$) in watchdog timer mode and an interrupt in interval timer mode.

Use word access to write to WTCNT, writing H'5A in the upper byte. Use byte access to read from WTCNT.

Note: The method for writing to WTCNT differs from that for other registers to prevent erroneous writes. See section 14.3.4, Notes on Register Access, for details.

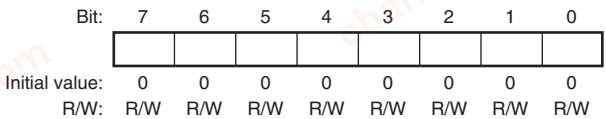

chanhvinh.com

14.3.2 Watchdog Timer Control/Status Register (WTCSR)

WTCSR is an 8-bit readable/writable register composed of bits to select the clock used for the count, overflow flags, and timer enable bit.

When used to count the clock oscillation settling time for canceling software standby mode, it retains its value after counter overflow.

Use word access to write to WTCSR, writing H'A5 in the upper byte. Use byte access to read from WTCSR.

Note: The method for writing to WTCSR differs from that for other registers to prevent erroneous writes. See section 14.3.4, Notes on Register Access, for details.

Bit:	7	6	5	4	3	2	1	0
	IOVF	WT/$\overline{IT}$	TME	-	-	CKS[2:0]		
Initial value:	0	0	0	1	1	0	0	0
R/W:	R/(W)	R/W	R/W	R	R	R/W	R/W	R/W

Bit	Bit Name	Initial Value	R/W	Description
7	IOVF	0	R/(W)	Interval Timer Overflow Indicates that WTCNT has overflowed in interval timer mode. This flag is not set in watchdog timer mode. 0: No overflow 1: WTCNT overflow in interval timer mode [Clearing condition] • When 0 is written to IOVF after reading IOVF

chanhvinh.com

Bit	Bit Name	Initial Value	R/W	Description
6	WT/$\overline{IT}$	0	R/W	Timer Mode Select Selects whether to use this module as a watchdog timer or an interval timer. 0: Use as interval timer 1: Use as watchdog timer Note: When the WTCNT overflows in watchdog timer mode, the $\overline{WDTOVF}$ signal is output externally. If this bit is modified when this module is running, the up-count may not be performed correctly.
5	TME	0	R/W	Timer Enable Starts and stops timer operation. Clear this bit to 0 when using this module in software standby mode or when changing the clock frequency. 0: Timer disabled Count-up stops and WTCNT value is retained 1: Timer enabled
4, 3	—	All 1	R	Reserved These bits are always read as 1. The write value should always be 1.

chanhvinh.com

Bit	Bit Name	Initial Value	R/W	Description
2 to 0	CKS[2:0]	000	R/W	Clock Select These bits select the clock to be used for the WTCNT count from the eight types obtainable by dividing the peripheral clock (P0ϕ). The overflow period that is shown inside the parenthesis in the table is the value when the peripheral clock (P0ϕ) is 33.33 MHz.

Bits 2 to 0	Clock Ratio	Overflow Cycle
000:	1 × P0ϕ	7.7 µs
001:	1/64 × P0ϕ	490 µs
010:	1/128 × P0ϕ	979 µs
011:	1/256 × P0ϕ	2.0 ms
100:	1/512 × P0ϕ	3.9 ms
101:	1/1024 × P0ϕ	7.8 ms
110:	1/4096 × P0ϕ	31 ms
111:	1/16384 × P0ϕ	125 ms

Note: If bits CKS[2:0] are modified when this module is running, the up-count may not be performed correctly. Ensure that these bits are modified only when this module is not running.

chanhvinh.com

14.3.3 Watchdog Reset Control/Status Register (WRCSR)

WRCSR is an 8-bit readable/writable register that controls output of the internal reset signal generated by watchdog timer counter (WTCNT) overflow.

Note: The method for writing to WRCSR differs from that for other registers to prevent erroneous writes. See section 14.3.4, Notes on Register Access, for details.

Bit:	7	6	5	4	3	2	1	0
	WOVF	RSTE	RSTS	-	-	-	-	-
Initial value:	0	0	0	1	1	1	1	1
R/W:	R/(W)	R/W	R/W	R	R	R	R	R

Bit	Bit Name	Initial Value	R/W	Description
7	WOVF	0	R/(W)	Watchdog Timer Overflow Indicates that the WTCNT has overflowed in watchdog timer mode. This bit is not set in interval timer mode. 0: No overflow 1: WTCNT has overflowed in watchdog timer mode [Clearing condition] • When 0 is written to WOVF after reading WOVF
6	RSTE	0	R/W	Reset Enable Selects whether to generate a signal to reset the LSI internally if WTCNT overflows in watchdog timer mode. In interval timer mode, this setting is ignored. 0: Not reset when WTCNT overflows* 1: Reset when WTCNT overflows Note: * LSI not reset internally, but WTCNT and WTCSR reset within this module.
5	RSTS	0	R/W	Reset Select Selects the type of reset when the WTCNT overflows in watchdog timer mode. In interval timer mode, this setting is ignored. 0: Power-on reset 1: Manual reset
4 to 0	—	All 1	R	Reserved These bits are always read as 1. The write value should always be 1.

chanhvinh.com

14.3.4 Notes on Register Access

The watchdog timer counter (WTCNT), watchdog timer control/status register (WTCSR), and watchdog reset control/status register (WRCSR) are more difficult to write to than other registers. The procedures for reading or writing to these registers are given below.

(1) Writing to WTCNT and WTCSR

These registers must be written by a word transfer instruction. They cannot be written by a byte or longword transfer instruction.

When writing to WTCNT, set the upper byte to H'5A and transfer the lower byte as the write data, as shown in figure 14.2. When writing to WTCSR, set the upper byte to H'A5 and transfer the lower byte as the write data. This transfer procedure writes the lower byte data to WTCNT or WTCSR.

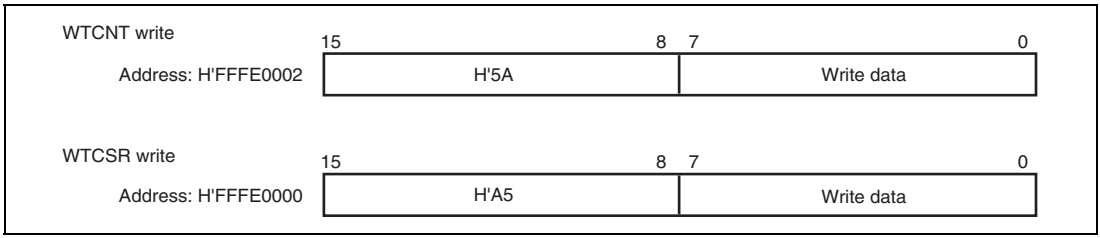

Figure 14.2 Writing to WTCNT and WTCSR

chanhvinh.com

(2) Writing to WRCSR

WRCSR must be written by a word access to address H'FFFE0004. It cannot be written by byte transfer or longword transfer instructions.

Procedures for writing 0 to WOVF (bit 7) and for writing to RSTE (bit 6) and RSTS (bit 5) are different, as shown in figure 14.3.

To write 0 to the WOVF bit, the write data must be H'A5 in the upper byte and H'00 in the lower byte. This clears the WOVF bit to 0. The RSTE and RSTS bits are not affected. To write to the RSTE and RSTS bits, the upper byte must be H'5A and the lower byte must be the write data. The values of bits 6 and 5 of the lower byte are transferred to the RSTE and RSTS bits, respectively. The WOVF bit is not affected.

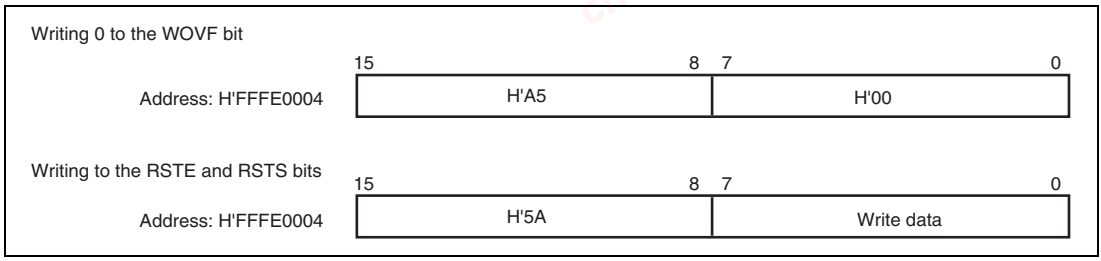

Figure 14.3 Writing to WRCSR

(3) Reading from WTCNT, WTCSR, and WRCSR

WTCNT, WTCSR, and WRCSR are read in a method similar to other registers. WTCSR is allocated to address H'FFFE0000, WTCNT to address H'FFFE0002, and WRCSR to address H'FFFE0004. Byte transfer instructions must be used for reading from these registers.

chanhvinh.com

14.4 Usage

14.4.1 Canceling Software Standby Mode

This module can be used to cancel software standby mode with an interrupt such as an NMI interrupt. The procedure is described below. (This module does not operate when resets are used for canceling, so keep the $\overline{\text{RES}}$ or $\overline{\text{MRES}}$ pin low until clock oscillation settles.)

1. Before making a transition to software standby mode, always clear the TME bit in WTCSR to 0. When the TME bit is 1, an erroneous reset or interval timer interrupt may be generated when the count overflows.
2. Set the type of count clock used in the CKS[2:0] bits in WTCSR and the initial value of the counter in WTCNT. These values should ensure that the time till count overflow is longer than the clock oscillation settling time.
3. After setting the STBY and DEEP bits of the standby control register 1 (STBCR1: see section 49, Power-Down Modes) to 1 and 0 respectively, the execution of a SLEEP instruction puts the system in software standby mode and clock operation then stops.
4. This module starts counting by detecting the edge change of the NMI signal.
5. When the module count overflows, the clock pulse generator starts supplying the clock and this LSI resumes operation. The WOVF flag in WRCSR is not set when this happens.

14.4.2 Using Watchdog Timer Mode

1. Set the WT/$\overline{\text{IT}}$ bit in WTCSR to 1, the type of count clock in the CKS[2:0] bits in WTCSR, whether this LSI is to be reset internally or not in the RSTE bit in WRCSR, the reset type if it is generated in the RSTS bit in WRCSR, and the initial value of the counter in WTCNT.
2. Set the TME bit in WTCSR to 1 to start the count in watchdog timer mode.
3. While operating in watchdog timer mode, rewrite the counter periodically to H'00 to prevent the counter from overflowing.
4. When the counter overflows, this module sets the WOVF flag in WRCSR to 1, and the $\overline{\text{WDTOVF}}$ signal is output externally (figure 14.4). The $\overline{\text{WDTOVF}}$ signal can be used to reset the system. The $\overline{\text{WDTOVF}}$ signal is output for 64 × P0ϕ clock cycles.
5. If the RSTE bit in WRCSR is set to 1, a signal to reset the inside of this LSI can be generated simultaneously with the $\overline{\text{WDTOVF}}$ signal. Either power-on reset or manual reset can be selected for this interrupt by the RSTS bit in WRCSR. The internal reset signal is output for 128 × P0ϕ clock cycles.
6. When an overflow reset of this module is generated simultaneously with a reset input on the $\overline{\text{RES}}$ pin, the $\overline{\text{RES}}$ pin reset takes priority, and the WOVF bit in WRCSR is cleared to 0.

chanhvinh.com

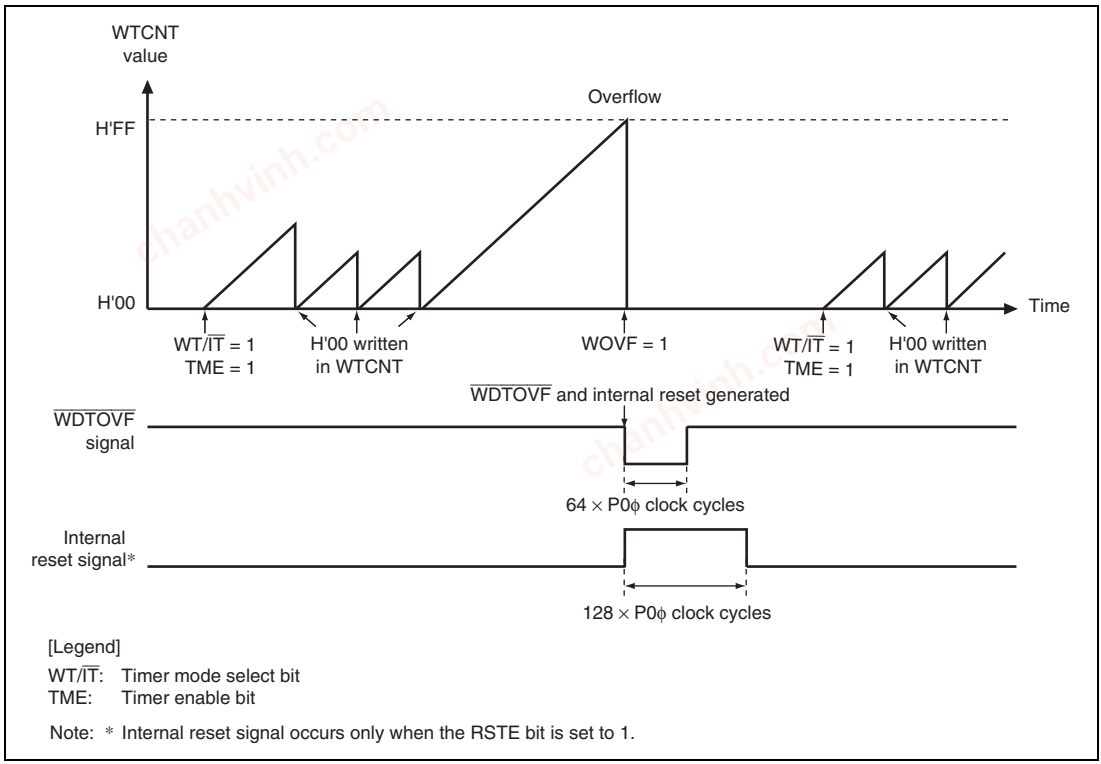

Figure 14.4 Operation in Watchdog Timer Mode

chanhvinh.com

14.4.3 Using Interval Timer Mode

When operating in interval timer mode, interval timer interrupts are generated at every overflow of the counter. This enables interrupts to be generated at set periods.

1. Clear the WT/$\overline{IT}$ bit in WTCSR to 0, set the type of count clock in the CKS[2:0] bits in WTCSR, and set the initial value of the counter in WTCNT.
2. Set the TME bit in WTCSR to 1 to start the count in interval timer mode.
3. When the counter overflows, this module sets the IOVF bit in WTCSR to 1 and an interval timer interrupt request is sent to the interrupt controller. The counter then resumes counting.

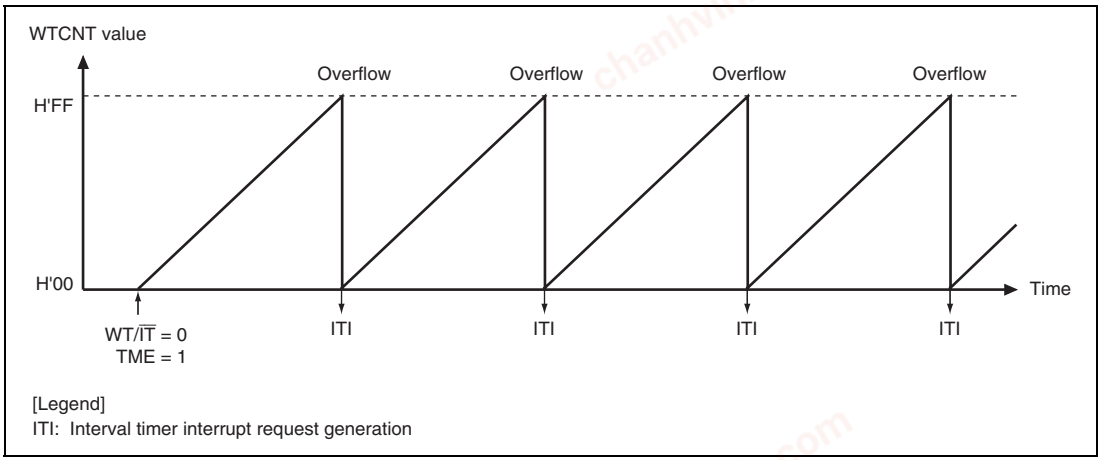

Figure 14.5 Operation in Interval Timer Mode

chanhvinh.com

14.5 Usage Notes

Pay attention to the following points when using this module in either the interval timer or watchdog timer mode.

14.5.1 Timer Variation

After timer operation has started, the period from the power-on reset point to the first count up timing of WTCNT varies depending on the time period that is set by the TME bit of WTCSR. The shortest such time period is thus one cycle of the peripheral clock, P0ϕ, while the longest is the result of frequency division according to the value in the CKS[2:0] bits. The timing of subsequent incrementation is in accord with the selected frequency division ratio. Accordingly, this time difference is referred to as timer variation.

This also applies to the timing of the first incrementation after WTCNT has been written to during timer operation.

14.5.2 Prohibition against Setting H'FF to WTCNT

When the value in WTCNT reaches H'FF, this module assumes that an overflow has occurred. Accordingly, when H'FF is set in WTCNT, an interval timer interrupt or reset will occur immediately, regardless of the current clock selection by the CKS[2:0] bits.

14.5.3 Interval Timer Overflow Flag

When the value in WTCNT is H'FF, the IOVF flag in WTCSR cannot be cleared.

Only clear the IOVF flag when the value in WTCNT has either become H'00 or been changed to a value other than H'FF.

chanhvinh.com

14.5.4 System Reset by $\overline{\text{WDTOVF}}$ Signal

If the $\overline{\text{WDTOVF}}$ signal is input to the $\overline{\text{RES}}$ pin of this LSI, this LSI cannot be initialized correctly.

Avoid input of the $\overline{\text{WDTOVF}}$ signal to the $\overline{\text{RES}}$ pin of this LSI through glue logic circuits. To reset the entire system with the $\overline{\text{WDTOVF}}$ signal, use the circuit shown in figure 14.6.

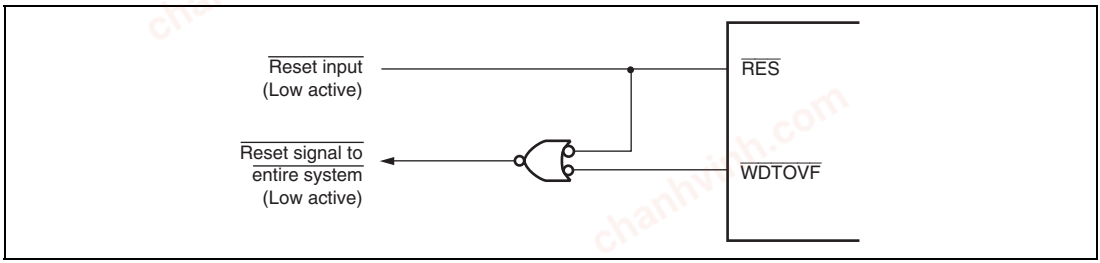

Figure 14.6 Example of System Reset Circuit Using $\overline{\text{WDTOVF}}$ Signal

14.5.5 Manual Reset in Watchdog Timer Mode

When a manual reset occurs in watchdog timer mode, the bus cycle is continued. If a manual reset occurs while the bus is released or during burst transfer by the direct memory access controller, manual reset exception handling will be pended until the CPU acquires the bus mastership.

14.5.6 Internal Reset in Watchdog Timer Mode

When an internal reset is generated by an overflow of the watchdog timer counter (WTCNT) in watchdog timer mode, the watchdog reset control/status register (WRCSR) is not initialized and the WOVF bit is set to 1. When the value of the WOVF bit is 1, no internal reset is generated when a WTCNT overflow occurs.

chanhvinh.com

Section 15 Realtime Clock

This LSI has a realtime clock and a 32.768-kHz crystal oscillator.

15.1 Features

- Clock and calendar functions (BCD format): Seconds, minutes, hours, date, day of the week, month, and year.
- 1-Hz to 64-Hz timer (binary format)
  64-Hz counter indicates the state of the divider circuit between 64 Hz and 1 Hz
- Start/stop function
- 30-second adjust function
- Alarm interrupt: Frame comparison of seconds, minutes, hours, date, day of the week, month, and year can be used as conditions for the alarm interrupt
- Periodic interrupts: the interrupt cycle may be 1/256 second, 1/64 second, 1/16 second, 1/4 second, 1/2 second, 1 second, or 2 seconds
- Carry interrupt: a carry interrupt indicates when a carry occurs during a counter read
- Automatic leap year adjustment
- The external clock signal for the internal signal or dedicated for the clock function can be selected as the operating clock signal for the clock function.
- Recovery from deep standby mode can be performed by an alarm interrupt.

chanhvinh.com

Figure 15.1 shows the block diagram.

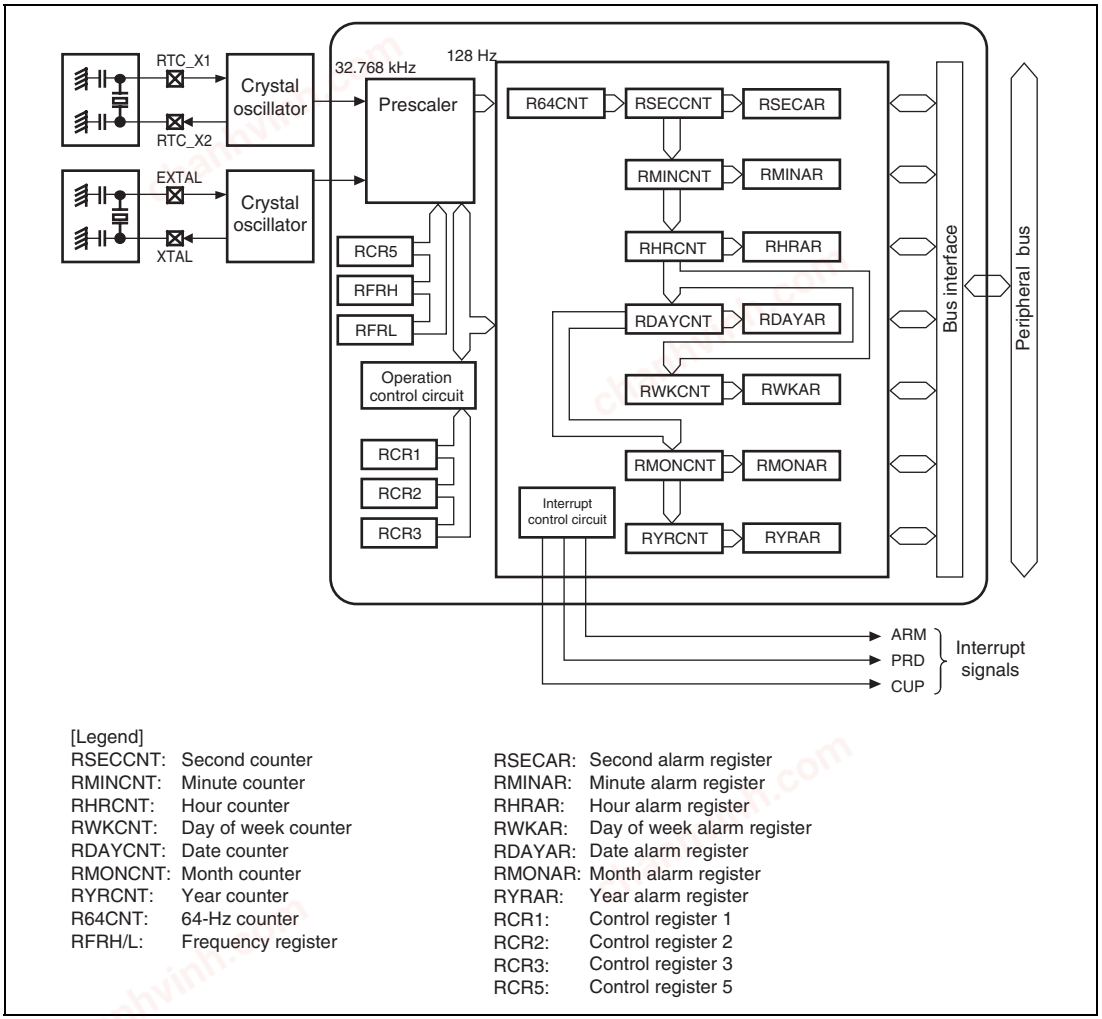

[Legend]

RSECCNT:	Second counter	RSECAR:	Second alarm register
RMINCNT:	Minute counter	RMINAR:	Minute alarm register
RHRCNT:	Hour counter	RHRAR:	Hour alarm register
RWKCNT:	Day of week counter	RWKAR:	Day of week alarm register
RDAYCNT:	Date counter	RDAYAR:	Date alarm register
RMONCNT:	Month counter	RMONAR:	Month alarm register
RYRCNT:	Year counter	RYRAR:	Year alarm register
R64CNT:	64-Hz counter	RCR1:	Control register 1
RFRH/L:	Frequency register	RCR2:	Control register 2
		RCR3:	Control register 3
		RCR5:	Control register 5

Figure 15.1 Block Diagram

chanhvinh.com

15.2 Input/Output Pin

Table 15.1 shows the pin configuration.

Table 15.1 Pin Configuration

Pin Name	Symbol	I/O	Description
Realtime clock crystal resonator pin/ external clock	RTC_X1	Input	Connects 32.768-kHz crystal resonator for this module, and enables to input the external clock to the RTC_X1 pin.
	RTC_X2	Output	
Internal clock crystal resonator/ external clock	EXTAL	Input	Connects crystal resonator used for internal operation. For details, see section 5, Clock Pulse Generator.
	XTAL	Output	

chanhvinh.com

15.3 Register Descriptions

Table 15.2 shows the register configuration.

Table 15.2 Register Configuration

Register Name	Abbreviation	R/W	Initial Value	Address	Access Size
64-Hz counter	R64CNT	R	H'xx	H'FFFE6000	8
Second counter	RSECCNT	R/W	H'xx	H'FFFE6002	8
Minute counter	RMINCNT	R/W	H'xx	H'FFFE6004	8
Hour counter	RHRCNT	R/W	H'xx	H'FFFE6006	8
Day of week counter	RWKCNT	R/W	H'xx	H'FFFE6008	8
Date counter	RDAYCNT	R/W	H'xx	H'FFFE600A	8
Month counter	RMONCNT	R/W	H'xx	H'FFFE600C	8
Year counter	RYRCNT	R/W	H'xxxx	H'FFFE600E	16
Second alarm register	RSECAR	R/W	H'xx	H'FFFE6010	8
Minute alarm register	RMINAR	R/W	H'xx	H'FFFE6012	8
Hour alarm register	RHRAR	R/W	H'xx	H'FFFE6014	8
Day of week alarm register	RWKAR	R/W	H'xx	H'FFFE6016	8
Date alarm register	RDAYAR	R/W	H'xx	H'FFFE6018	8
Month alarm register	RMONAR	R/W	H'xx	H'FFFE601A	8
Year alarm register	RYRAR	R/W	H'xxxx	H'FFFE6020	16
Control register 1	RCR1	R/W	H'xx	H'FFFE601C	8
Control register 2	RCR2	R/W	H'09	H'FFFE601E	8
Control register 3	RCR3	R/W	H'x0	H'FFFE6024	8
Control register 5	RCR5	R/W	H'xx	H'FFFE6026	8
Frequency register H	RFRH	R/W	H'xxxx	H'FFFE602A	16
Frequency register L	RFRL	R/W	H'xxxx	H'FFFE602C	16

chanhvinh.com

15.3.1 64-Hz Counter (R64CNT)

R64CNT indicates the state of the divider circuit between 64 Hz and 1 Hz.

Reading this register, when carry from 128-Hz divider stage is generated, sets the CF bit in the control register 1 (RCR1) to 1 so that the carrying and reading 64 Hz counter are performed at the same time is indicated. In this case, the R64CNT should be read again after writing 0 to the CF bit in RCR1 since the read value is not valid.

After the RESET bit or ADJ bit in the control register 2 (RCR2) is set to 1, the divider circuit is initialized and R64CNT is initialized.

Bit:	7	6	5	4	3	2	1	0
	-	1Hz	2Hz	4Hz	8Hz	16Hz	32Hz	64Hz
Initial value:	0	Undefined	Undefined	Undefined	Undefined	Undefined	Undefined	Undefined
R/W:	R	R	R	R	R	R	R	R

Bit	Bit Name	Initial Value	R/W	Description
7	—	0	R	Reserved This bit is always read as 0. The write value should always be 0.
6	1 Hz	Undefined	R	Indicate the state of the divider circuit between 64 Hz and 1 Hz.
5	2 Hz	Undefined	R	
4	4 Hz	Undefined	R	
3	8 Hz	Undefined	R	
2	16 Hz	Undefined	R	
1	32 Hz	Undefined	R	
0	64 Hz	Undefined	R	

chanhvinh.com

15.3.2 Second Counter (RSECCNT)

RSECCNT is used for setting/counting in the BCD-coded second section. The count operation is performed by a carry for each second of the 64-Hz counter.

The assignable range is from 00 through 59 (practically in BCD), otherwise operation errors occur. Carry out write processing after stopping the count operation through the setting of the START bit in RCR2.

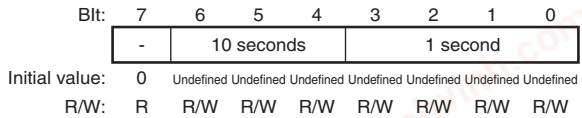

Bit	Bit Name	Initial Value	R/W	Description
7	—	0	R	Reserved This bit is always read as 0. The write value should always be 0.
6 to 4	10 seconds	Undefined	R/W	Counting Ten's Position of Seconds Counts on 0 to 5 for 60-seconds counting.
3 to 0	1 second	Undefined	R/W	Counting One's Position of Seconds Counts on 0 to 9 once per second. When a carry is generated, 1 is added to the ten's position.

chanhvinh.com

15.3.3 Minute Counter (RMINCNT)

RMINCNT is used for setting/counting in the BCD-coded minute section. The count operation is performed by a carry for each minute of the second counter.

The assignable range is from 00 through 59 (practically in BCD), otherwise operation errors occur. Carry out write processing after stopping the count operation through the setting of the START bit in RCR2.

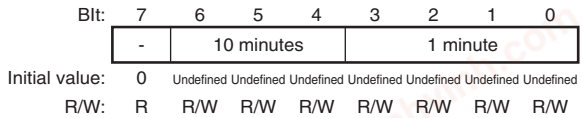

Bit	Bit Name	Initial Value	R/W	Description
7	—	0	R	Reserved This bit is always read as 0.The write value should always be 0.
6 to 4	10 minutes	Undefined	R/W	Counting Ten's Position of Minutes Counts on 0 to 5 for 60-minutes counting.
3 to 0	1 minute	Undefined	R/W	Counting One's Position of Minutes Counts on 0 to 9 once per second. When a carry is generated, 1 is added to the ten's position.

chanhvinh.com

15.3.4 Hour Counter (RHRCNT)

RHRCNT is used for setting/counting in the BCD-coded hour section. The count operation is performed by a carry for each 1 hour of the minute counter.

The assignable range is from 00 through 23 (practically in BCD), otherwise operation errors occur. Carry out write processing after stopping the count operation through the setting of the START bit in RCR2.

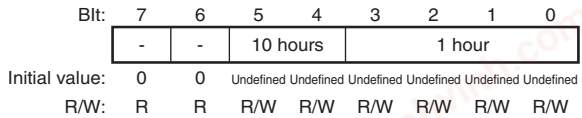

Bit	Bit Name	Initial Value	R/W	Description
7, 6	—	All 0	R	Reserved These bits are always read as 0. The write value should always be 0.
5, 4	10 hours	Undefined	R/W	Counting Ten's Position of Hours Counts on 0 to 2 for ten's position of hours.
3 to 0	1 hour	Undefined	R/W	Counting One's Position of Hours Counts on 0 to 9 once per hour. When a carry is generated, 1 is added to the ten's position.

chanhvinh.com

15.3.5 Day of Week Counter (RWKCNT)

RWKCNT is used for setting/counting day of week section. The count operation is performed by a carry for each day of the date counter.

The assignable range is from 0 through 6 (practically in BCD), otherwise operation errors occur. Carry out write processing after stopping the count operation through the setting of the START bit in RCR2.

Bit:	7	6	5	4	3	2	1	0
	-	-	-	-	-	Day		
Initial value:	0	0	0	0	0	Undefined	Undefined	Undefined
R/W:	R	R	R	R	R	R/W	R/W	R/W

Bit	Bit Name	Initial Value	R/W	Description
7 to 3	—	All 0	R	Reserved These bits are always read as 0. The write value should always be 0.
2 to 0	Day	Undefined	R/W	Day-of-Week Counting Day-of-week is indicated with a binary code. 000: Sunday 001: Monday 010: Tuesday 011: Wednesday 100: Thursday 101: Friday 110: Saturday 111: Reserved (setting prohibited)

chanhvinh.com

15.3.6 Date Counter (RDAYCNT)

RDAYCNT is used for setting/counting in the BCD-coded date section. The count operation is performed by a carry for each day of the hour counter.

The assignable range is from 01 through 31 (practically in BCD), otherwise operation errors occur. Carry out write processing after stopping the count operation through the setting of the START bit in RCR2.

The range of date changes with each month and in leap years. Confirm the correct setting. Leap years are recognized by dividing the year counter (RYRCNT) values by 400, 100, and 4 and obtaining a fractional result of 0.

Bit:	7	6	5	4	3	2	1	0
	-	-	10 days		1 day			
Initial value:	0	0	Undefined	Undefined	Undefined	Undefined	Undefined	Undefined
R/W:	R	R	R/W	R/W	R/W	R/W	R/W	R/W

Bit	Bit Name	Initial Value	R/W	Description
7, 6	—	All 0	R	Reserved These bits are always read as 0. The write value should always be 0.
5, 4	10 days	Undefined	R/W	Counting Ten's Position of Dates
3 to 0	1 day	Undefined	R/W	Counting One's Position of Dates Counts on 0 to 9 once per date. When a carry is generated, 1 is added to the ten's position.

chanhvinh.com

15.3.7 Month Counter (RMONCNT)

RMONCNT is used for setting/counting in the BCD-coded month section. The count operation is performed by a carry for each month of the date counter.

The assignable range is from 01 through 12 (practically in BCD), otherwise operation errors occur. Carry out write processing after stopping the count operation through the setting of the START bit in RCR2.

Bit:	7	6	5	4	3	2	1	0
	-	-	-	10 months	1 month			
Initial value:	0	0	0	Undefined	Undefined	Undefined	Undefined	Undefined
R/W:	R	R	R	R/W	R/W	R/W	R/W	R/W

Bit	Bit Name	Initial Value	R/W	Description
7 to 5	—	All 0	R	Reserved These bits are always read as 0. The write value should always be 0.
4	10 months	Undefined	R/W	Counting Ten's Position of Months
3 to 0	1 month	Undefined	R/W	Counting One's Position of Months Counts on 0 to 9 once per month. When a carry is generated, 1 is added to the ten's position.

chanhvinh.com

15.3.8 Year Counter (RYRCNT)

RYRCNT is used for setting/counting in the BCD-coded year section. The count operation is performed by a carry for each year of the month counter.

The assignable range is from 0000 through 9999 (practically in BCD), otherwise operation errors occur. Carry out write processing after stopping the count operation through the setting of the START bit in RCR2.

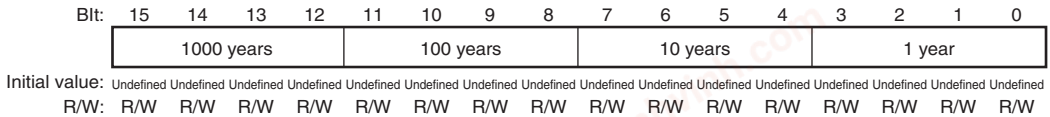

Bit	Bit Name	Initial Value	R/W	Description
15 to 12	1000 years	Undefined	R/W	Counting Thousand's Position of Years
11 to 8	100 years	Undefined	R/W	Counting Hundred's Position of Years
7 to 4	10 years	Undefined	R/W	Counting Ten's Position of Years
3 to 0	1 year	Undefined	R/W	Counting One's Position of Years

chanhvinh.com

15.3.9 Second Alarm Register (RSECAR)

RSECAR is an alarm register corresponding to the BCD-coded second counter RSECCNT. When the ENB bit is set to 1, a comparison with the RSECCNT value is performed. From among RSECAR/RMINAR/RHRAR/RWKAR/RDAYAR/RMONAR/RCR3, the counter and alarm register comparison is performed only on those with ENB bits set to 1, and if each of those coincides, an alarm flag of RCR1 is set to 1.

The assignable range is from 00 through 59 + ENB bits (practically in BCD), otherwise operation errors occur.

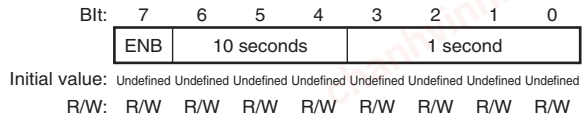

Bit	Bit Name	Initial Value	R/W	Description
7	ENB	Undefined	R/W	When this bit is set to 1, a comparison with the RSECCNT value is performed.
6 to 4	10 seconds	Undefined	R/W	Ten's position of seconds setting value
3 to 0	1 second	Undefined	R/W	One's position of seconds setting value

chanhvinh.com

15.3.10 Minute Alarm Register (RMINAR)

RMINAR is an alarm register corresponding to the BCD-coded minute counter RMINCNT. When the ENB bit is set to 1, a comparison with the RMINCNT value is performed. From among RSECAR/RMINAR/RHRAR/RWKAR/RDAYAR/RMONAR/RCR3, the counter and alarm register comparison is performed only on those with ENB bits set to 1, and if each of those coincides, an alarm flag of RCR1 is set to 1.

The assignable range is from 00 through 59 + ENB bits (practically in BCD), otherwise operation errors occur.

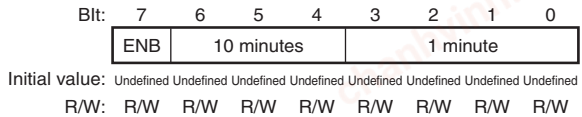

Bit	Bit Name	Initial Value	R/W	Description
7	ENB	Undefined	R/W	When this bit is set to 1, a comparison with the RMINCNT value is performed.
6 to 4	10 minutes	Undefined	R/W	Ten's position of minutes setting value
3 to 0	1 minute	Undefined	R/W	One's position of minutes setting value

chanhvinh.com

15.3.11 Hour Alarm Register (RHRAR)

RHRAR is an alarm register corresponding to the BCD-coded hour counter RHRCNT. When the ENB bit is set to 1, a comparison with the RHRCNT value is performed. From among RSECAR/RMINAR/RHRAR/RWKAR/RDAYAR/RMONAR/RCR3, the counter and alarm register comparison is performed only on those with ENB bits set to 1, and if each of those coincides, an alarm flag of RCR1 is set to 1.

The assignable range is from 00 through 23 + ENB bits (practically in BCD), otherwise operation errors occur.

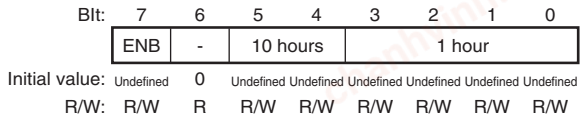

Bit	Bit Name	Initial Value	R/W	Description
7	ENB	Undefined	R/W	When this bit is set to 1, a comparison with the RHRCNT value is performed.
6	—	0	R	Reserved This bit is always read as 0. The write value should always be 0.
5, 4	10 hours	Undefined	R/W	Ten's position of hours setting value
3 to 0	1 hour	Undefined	R/W	One's position of hours setting value

chanhvinh.com

15.3.12 Day of Week Alarm Register (RWKAR)

RWKAR is an alarm register corresponding to the BCD-coded day of week counter RWKCNT. When the ENB bit is set to 1, a comparison with the RWKCNT value is performed. From among RSECAR/RMINAR/RHRAR/RWKAR/RDAYAR/RMONAR/RCR3, the counter and alarm register comparison is performed only on those with ENB bits set to 1, and if each of those coincides, an alarm flag of RCR1 is set to 1.

The assignable range is from 0 through 6 + ENB bits (practically in BCD), otherwise operation errors occur.

Bit:	7	6	5	4	3	2	1	0
	ENB	-	-	-	-	Day		
Initial value:	Undefined	0	0	0	0	Undefined	Undefined	Undefined
R/W:	R/W	R	R	R	R	R/W	R/W	R/W

Bit	Bit Name	Initial Value	R/W	Description
7	ENB	Undefined	R/W	When this bit is set to 1, a comparison with the RWKCNT value is performed.
6 to 3	—	All 0	R	Reserved These bits are always read as 0. The write value should always be 0.
2 to 0	Day	Undefined	R/W	Day of Week Setting Value 000: Sunday 001: Monday 010: Tuesday 011: Wednesday 100: Thursday 101: Friday 110: Saturday 111: Reserved (setting prohibited)

chanhvinh.com

15.3.13 Date Alarm Register (RDAYAR)

RDAYAR is an alarm register corresponding to the BCD-coded date counter RDAYCNT. When the ENB bit is set to 1, a comparison with the RDAYCNT value is performed. From among RSECAR/RMINAR/RHRAR/RWKAR/RDAYAR/RMONAR/RCR3, the counter and alarm register comparison is performed only on those with ENB bits set to 1, and if each of those coincides, an alarm flag of RCR1 is set to 1.

The assignable range is from 01 through 31 + ENB bits (practically in BCD), otherwise operation errors occur.

Bit:	7	6	5	4	3	2	1	0
	ENB	-	10 days		1 day			
Initial value:	Undefined	0	Undefined	Undefined	Undefined	Undefined	Undefined	Undefined
R/W:	R/W	R	R/W	R/W	R/W	R/W	R/W	R/W

Bit	Bit Name	Initial Value	R/W	Description
7	ENB	Undefined	R/W	When this bit is set to 1, a comparison with the RDAYCNT value is performed.
6	—	0	R	Reserved This bit is always read as 0. The write value should always be 0.
5, 4	10 days	Undefined	R/W	Ten's position of dates setting value
3 to 0	1 day	Undefined	R/W	One's position of dates setting value

chanhvinh.com

15.3.14 Month Alarm Register (RMONAR)

RMONAR is an alarm register corresponding to the BCD-coded month counter RMONCNT. When the ENB bit is set to 1, a comparison with the RMONCNT value is performed. From among RSECAR/RMINAR/RHRAR/RWKAR/RDAYAR/RMONAR/RCR3, the counter and alarm register comparison is performed only on those with ENB bits set to 1, and if each of those coincides, an alarm flag of RCR1 is set to 1.

The assignable range is from 01 through 12 + ENB bits (practically in BCD), otherwise operation errors occur.

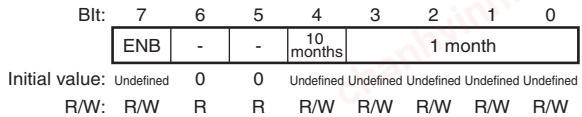

Bit	Bit Name	Initial Value	R/W	Description
7	ENB	Undefined	R/W	When this bit is set to 1, a comparison with the RMONCNT value is performed.
6, 5	—	All 0	R	Reserved These bits are always read as 0. The write value should always be 0.
4	10 months	Undefined	R/W	Ten's position of months setting value
3 to 0	1 month	Undefined	R/W	One's position of months setting value

chanhvinh.com

15.3.15 Year Alarm Register (RYRAR)

RYRAR is an alarm register corresponding to the year counter RYRCNT. The assignable range is from 0000 through 9999 (practically in BCD), otherwise operation errors occur.

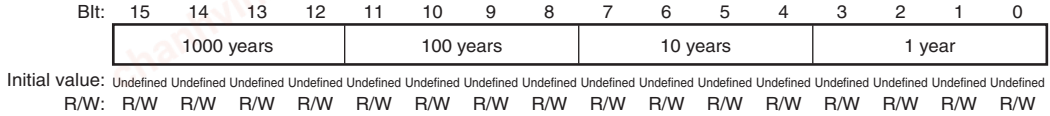

Bit	Bit Name	Initial Value	R/W	Description
15 to 12	1000 years	Undefined	R/W	Thousand's position of years setting value
11 to 8	100 years	Undefined	R/W	Hundred's position of years setting value
7 to 4	10 years	Undefined	R/W	Ten's position of years setting value
3 to 0	1 year	Undefined	R/W	One's position of years setting value

chanhvinh.com

15.3.16 Control Register 1 (RCR1)

RCR1 is a register that affects carry flags and alarm flags. It also selects whether to generate interrupts for each flag.

The CF flag remains undefined until the divider circuit is reset (the RESET and ADJ bits in RCR2 are set to 1). When using the CF flag, make sure to reset the divider circuit beforehand.

The AF flag remains undefined until the value is set to an alarm register and a counter. When using the AF flag, make sure to set the alarm register and counter beforehand.

Bit:	7	6	5	4	3	2	1	0
	CF	-	-	CIE	AIE	-	-	AF
Initial value:	Undefined	0	0	0	0	0	0	Undefined
R/W:	R/W	R	R	R/W	R/W	R	R	R/W

Bit	Bit Name	Initial Value	R/W	Description
7	CF	Undefined	R/W	Carry Flag Status flag that indicates that a carry has occurred. CF is set to 1 when a count-up to 64-Hz occurs at the second counter carry or 64-Hz counter read. A count register value read at this time cannot be guaranteed; another read is required. 0: No carry of 64-Hz counter by second counter or 64-Hz counter [Clearing condition] When 0 is written to CF 1: Carry of 64-Hz counter by second counter or 64 Hz counter [Setting condition] When the second counter or 64-Hz counter is read during a carry occurrence by the 64-Hz counter, or 1 is written to CF.
6, 5	—	All 0	R	Reserved These bits are always read as 0. The write value should always be 0.

chanhvinh.com

Bit	Bit Name	Initial Value	R/W	Description
4	CIE	0	R/W	Carry Interrupt Enable Flag When the carry flag (CF) is set to 1, the CIE bit enables interrupts. 0: A carry interrupt is not generated when the CF flag is set to 1 1: A carry interrupt is generated when the CF flag is set to 1
3	AIE	0	R/W	Alarm Interrupt Enable Flag When the alarm flag (AF) is set to 1, the AIE bit allows interrupts. 0: An alarm interrupt is not generated when the AF flag is set to 1 1: An alarm interrupt is generated when the AF flag is set to 1
2, 1	—	All 0	R	Reserved These bits are always read as 0. The write value should always be 0.
0	AF	Undefined	R/W	Alarm Flag The AF flag is set when the alarm time, which is set by an alarm register (ENB bit in RSECAR, RMINAR, RHRAR, RWKAR, RDAYAR, RMONAR, or RYRAR is set to 1), and counter match. 0: Alarm register and counter not match [Clearing condition] When 0 is written to AF. 1: Alarm register and counter match* [Setting condition] When alarm register (only a register with ENB bit set to 1) and counter match Note: * Writing 1 holds previous value.

chanhvinh.com

15.3.17 Control Register 2 (RCR2)

RCR2 is a register for periodic interrupt control, 30-second adjustment, divider circuit RESET, and count control.

RCR2 is initialized by a power-on reset or in deep standby mode. Bits other than the RTCEN and START bits are initialized by a manual reset.

Bit:	7	6	5	4	3	2	1	0
	PEF	PES[2:0]			RTCEN	ADJ	RESET	START
Initial value:	0	0	0	0	1	0	0	1
R/W:	R/W	R/W	R/W	R/W	R/W	R/W	R/W	R/W

Bit	Bit Name	Initial Value	R/W	Description
7	PEF	0	R/W	Periodic Interrupt Flag Indicates interrupt generation with the period designated by the PES2 to PES0 bits. When set to 1, PEF generates periodic interrupts. 0: Interrupts not generated with the period designated by the bits PES2 to PES0. [Clearing condition] When 0 is written to PEF 1: Interrupts generated with the period designated by the PES2 to PES0 bits. [Setting condition] When an interrupt is generated with the period designated by the bits PES0 to PES2 or when 1 is written to the PEF flag

chanhvinh.com

Bit	Bit Name	Initial Value	R/W	Description
6 to 4	PES[2:0]	000	R/W	Interrupt Enable Flags These bits specify the periodic interrupt. 000: No periodic interrupts generated 001: Setting prohibited 010: Periodic interrupt generated every 1/64 second 011: Periodic interrupt generated every 1/16 second 100: Periodic interrupt generated every 1/4 second 101: Periodic interrupt generated every 1/2 second 110: Periodic interrupt generated every 1 second 111: Periodic interrupt generated every 2 seconds
3	RTCEN	1	R/W	RTC_X1 Clock Control Controls the function of RTC_X1 pin. 0: Halts the on-chip crystal oscillator/disables the external clock input. 1: Runs the on-chip crystal oscillator/enables the external clock input.
2	ADJ	0	R/W	30-Second Adjustment When 1 is written to the ADJ bit, times of 29 seconds or less will be rounded to 00 seconds and 30 seconds or more to 1 minute. The divider circuit (prescaler and R64CNT) will be simultaneously reset. This bit always reads 0. 0: Runs normally. 1: 30-second adjustment.

chanhvinh.com

Bit	Bit Name	Initial Value	R/W	Description
1	RESET	0	R/W	Reset Writing 1 to this bit initializes the divider circuit, the R64CNT register, the alarm register, the RCR3 register, bits CF and AF in RCR1, and bit PEF in RCR2. In this case, the RESET bit is automatically reset to 0 after 1 is written to and the above registers are reset. Thus, there is no need to write 1 to this bit. This bit is always read as 0. 0: Runs normally. 1: Divider circuit is reset.
0	START	1	R/W	Start Halts and restarts the counter (clock). 0: Second/minute/hour/day/week/month/year counter halts. 1: Second/minute/hour/day/week/month/year counter runs normally.

15.3.18 Control Register 3 (RCR3)

When the ENB bit is set to 1, RCR3 performs a comparison with the RYRCNT. From among RSECAR/RMINAR/RHRAR/RWKAR/RDAYAR/RMONAR/RCR3, the counter and alarm register comparison is performed only on those with ENB bits set to 1, and if each of those coincides, an alarm flag of RCR1 is set to 1.

Bit:	7	6	5	4	3	2	1	0
	ENB	-	-	-	-	-	-	-
Initial value:	Undefined	0	0	0	0	0	0	0
R/W:	R/W	R	R	R	R	R	R	R

Bit	Bit Name	Initial Value	R/W	Description
7	ENB	Undefined	R/W	When this bit is set to 1, comparison of the year alarm register (RYRAR) and the year counter (RYRCNT) is performed.
6 to 0	—	All 0	R	Reserved These bits are always read as 0. The write value should always be 0.

chanhvinh.com

15.3.19 Control Register 5 (RCR5)

When the RCKSEL[1:0] bits in RCR5 are set to 00, the RTC_X1 clock pulses are counted; when the RCKSEL[1:0] bits are set to 01, the EXTAL clock pulses are counted to implement the clock function.

Bit:	7	6	5	4	3	2	1	0
	-	-	-	-	-	-	RCKSEL[1:0]	
Initial value:	0	0	0	0	0	0	Undefined	Undefined
R/W:	R	R	R	R	R	R	R/W	R/W

Bit	Bit Name	Initial Value	R/W	Description
7 to 2	—	All 0	R	Reserved These bits are always read as 0. The write value should always be 0.
1, 0	RCKSEL[1:0]	Undefined	R/W	Operation clock select Operation clock can be selected from RTC_X1 or EXTAL. The setting of these bits should not be switched during operation. 00: Selects RTC_X1. 01: Selects EXTAL. 10: Setting prohibited. 11: Setting prohibited.

chanhvinh.com

15.3.20 Frequency Register H/L (RFRH/L)

RFRH/L is a 16-bit readable/writable register.

The "frequency comparison value" is set in RFC[18:0] so that a 128-Hz clock is generated when the realtime clock operates at the EXTAL clock frequency.

Change the "frequency comparison value" according to the EXTAL clock frequency. The calculation method is shown below.

Bit:	31	30	29	28	27	26	25	24	23	22	21	20	19	18	17	16
	SEL64	-	-	-	-	-	-	-	-	-	-	-	-	RFC[18:16]		
Initial value:	Undefined	0	0	0	0	0	0	0	0	0	0	0	0	Undefined	Undefined	Undefined
R/W:	R/W	R	R	R	R	R	R	R	R	R	R	R	R	R/W	R/W	R/W

Bit:	15	14	13	12	11	10	9	8	7	6	5	4	3	2	1	0
	RFC[15:0]															
Initial value:	Undefined	Undefined	Undefined	Undefined	Undefined	Undefined	Undefined	Undefined	Undefined	Undefined	Undefined	Undefined	Undefined	Undefined	Undefined	Undefined
R/W:	R/W	R/W	R/W	R/W	R/W	R/W	R/W	R/W	R/W	R/W	R/W	R/W	R/W	R/W	R/W	R/W

Bit	Bit Name	Initial Value	R/W	Description
31	SEL64	Undefined	R/W	64-Hz Divider Select Indicates the operating clock that the EXTAL clock frequency is dividable by 64-Hz and not dividable by 128-Hz. 0: EXTAL clock frequency is dividable by 128-Hz. 1: EXTAL clock frequency is dividable by 64-Hz and not dividable by 128-Hz.
30 to 19	—	All 0	R	Reserved These bits are always read as 0. The write value should always be 0.
18 to 0	RFC[18:0]	Undefined	R/W	Frequency comparison value Sets the comparison value to generate operation clock from the EXTAL clock frequency.

chanhvinh.com

(1) Method for calculating "frequency comparison value".

- EXTAL clock frequency is dividable by 128-Hz
  RFC[18:0] = (EXTAL clock frequency) / 128
  Clear the SEL64 bit to 0 in this case.
- EXTAL clock frequency is dividable by 64-Hz and not dividable by 128-Hz
  RFC[18:0] = (EXTAL clock frequency) / 64
  Set the SEL64 bit to 1 in this case.

(2) Setting Example

Table 15.3 Setting Example

Clock Frequency		SEL64 Setting Value	RFC Setting Value
EXTAL	10 MHz	0	H'1312D
	11 MHz	1	H'29F63
	12 MHz	0	H'16E36
	13 MHz	1	H'31975

chanhvinh.com

15.4 Operation

Usage of this module is shown below.

15.4.1 Initial Settings of Registers after Power-On

All the registers should be initialized after the power is turned on.

15.4.2 Setting Time

Figure 15.2 shows how to set the time when the clock is stopped.

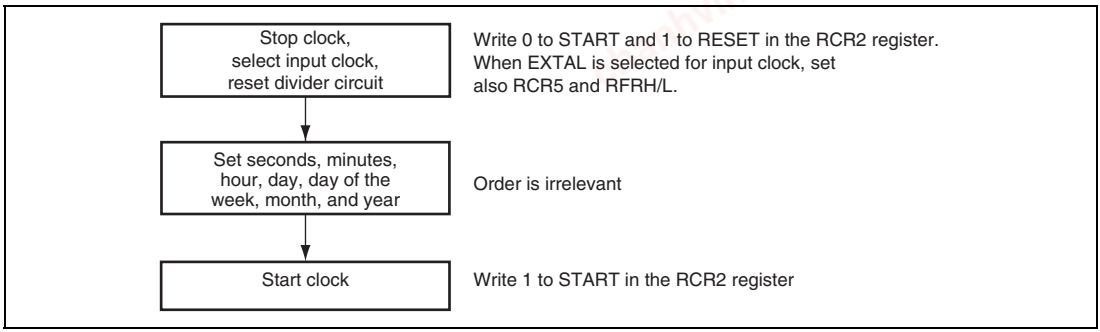

Figure 15.2 Setting Time

chanhvinh.com

15.4.3 Reading Time

Figure 15.3 shows how to read the time.

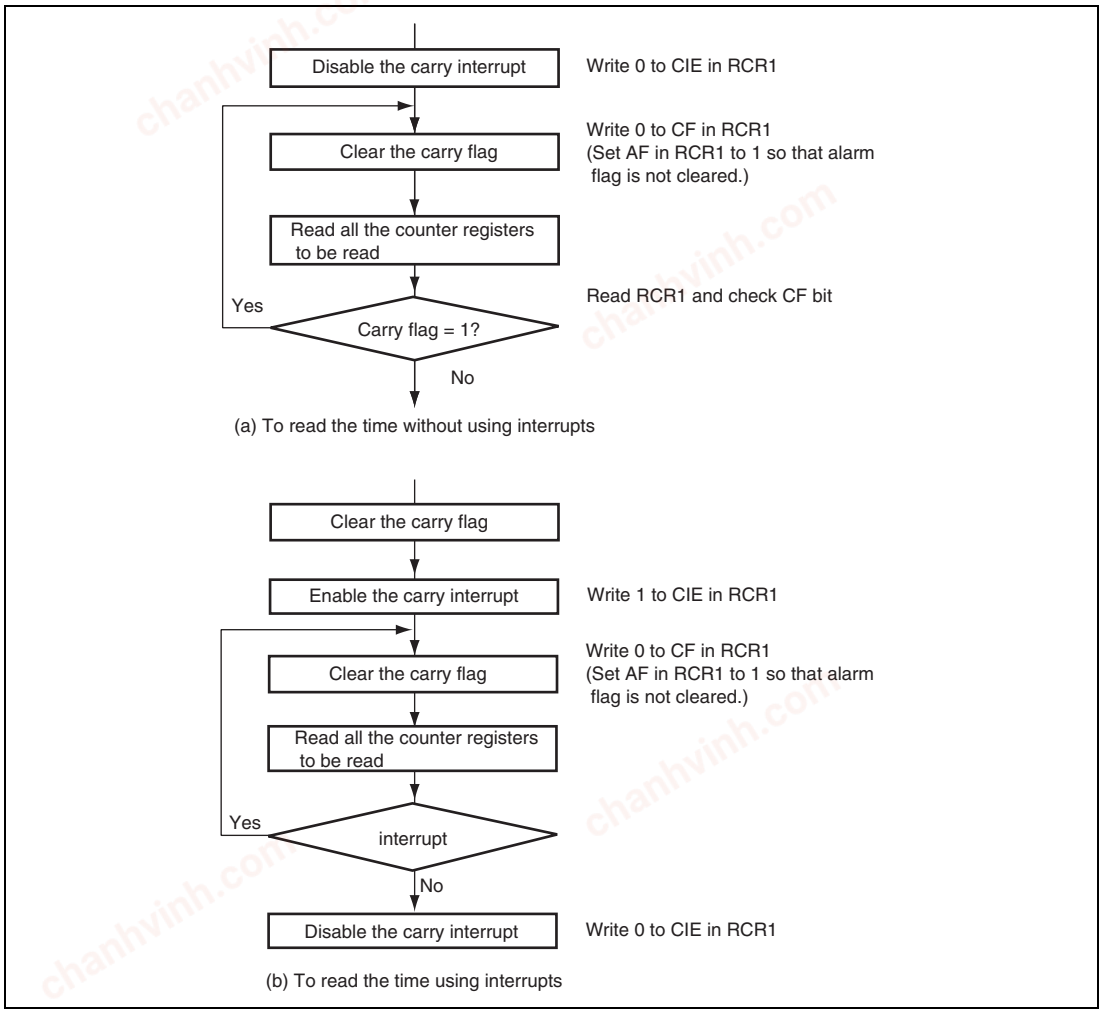

Figure 15.3 Reading Time

If a carry occurs while reading the time, the correct time will not be obtained, so it must be read again. Part (a) in figure 15.3 shows the method of reading the time without using interrupts; part (b) in figure 15.3 shows the method using carry interrupts. To keep programming simple, method (a) should normally be used.

chanhvinh.com

15.4.4 Alarm Function

Figure 15.4 shows how to use the alarm function.

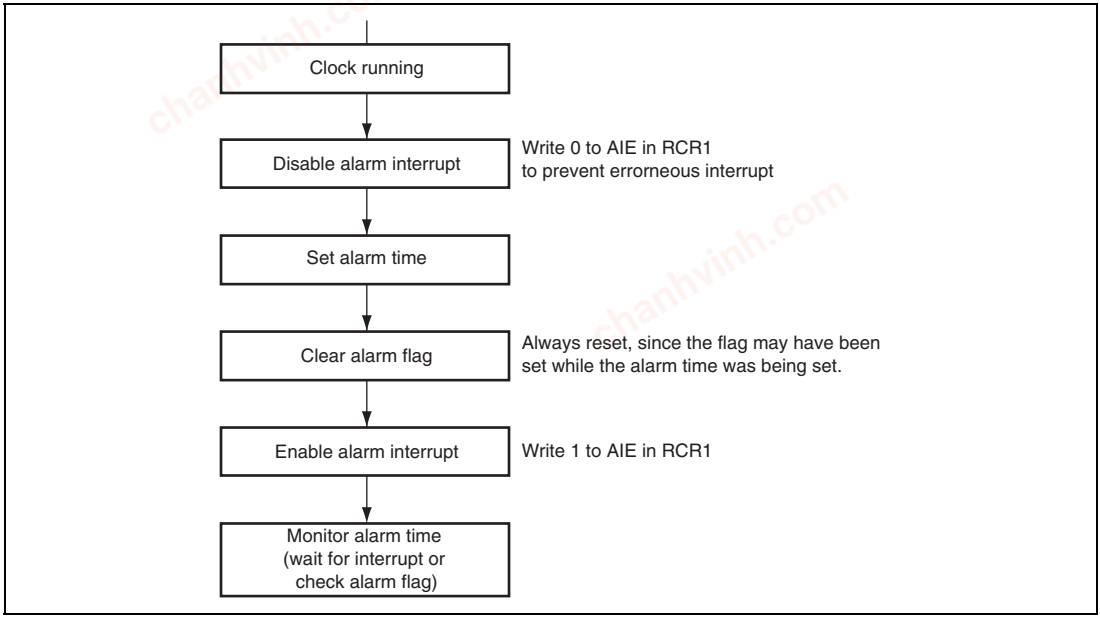

Figure 15.4 Using Alarm Function

Alarms can be generated using seconds, minutes, hours, day of the week, date, month, year, or any combination of these. Set the ENB bit in the register on which the alarm is placed to 1, and then set the alarm time in the lower bits. Clear the ENB bit in the register on which the alarm is not placed to 0.

When the clock and alarm times match, 1 is set in the AF bit in RCR1. Alarm detection can be checked by reading this bit, but normally it is done by interrupt. If 1 is set in the AIE bit in RCR1, an interrupt is generated when an alarm occurs.

The alarm flag is set when the clock and alarm times match. However, the alarm flag can be cleared by writing 0.

chanhvinh.com

15.5 Usage Notes

15.5.1 Register Writing during Count

The following registers cannot be written to during a count (while bit 0 = 1 in RCR2).

RSECCNT, RMINCNT, RHRCNT, RDAYCNT, RWKCNT, RMONCNT, RYRCONT

The count must be stopped before writing to any of the above registers.

15.5.2 Use of Realtime Clock Periodic Interrupts

The method of using the periodic interrupt function is shown in figure 15.5.

A periodic interrupt can be generated periodically at the interval set by bits PES2 to PES0 in RCR2. When the time set by bits PES2 to PES0 has elapsed, the PEF is set to 1.

The PEF is cleared to 0 upon periodic interrupt generation or when bits PES2 to PES0 are set. Periodic interrupt generation can be confirmed by reading this bit, but normally the interrupt function is used.

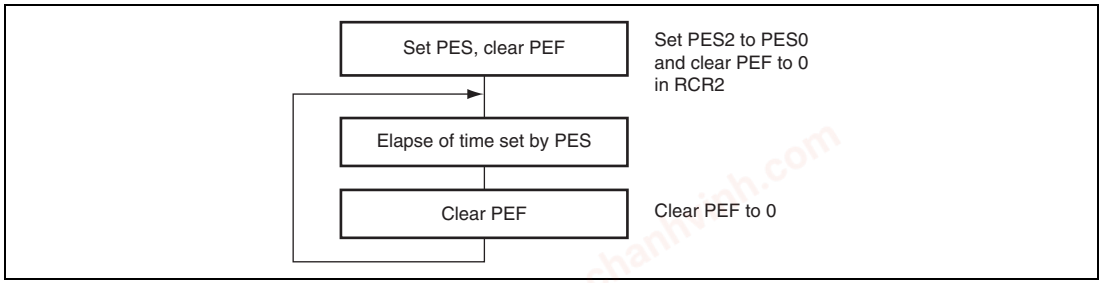

Figure 15.5 Using Periodic Interrupt Function

15.5.3 Transition to Standby Mode after Setting Register

When a transition to standby mode is made after registers in this module are set, sometimes counting is not performed correctly. In case the registers are set, be sure to make a transition to standby mode after performing one dummy read of the register.

chanhvinh.com

15.5.4 Usage Notes when Writing to and Reading the Register

- When reading a counter register such as the seconds counter and the RCR2 register after having writing to the given register, dummy-read the register twice before reading the actual value. The register contents from before the write are returned by the two dummy reads, and the third read returns the register contents reflecting the write.
- Registers other than the above can be read immediately after a write and the written value is reflected.

chanhvinh.com

Section 16 Serial Communication Interface with FIFO

This LSI has an eight-channel serial communication interface with FIFO that supports both asynchronous and clock synchronous serial communication. It also has 16-stage FIFO registers for both transmission and reception independently for each channel that enable this LSI to perform efficient high-speed continuous communication.

16.1 Features

- Asynchronous serial communication:
  - Serial data communication is performed by start-stop in character units. This module can communicate with a universal asynchronous receiver/transmitter (UART), an asynchronous communication interface adapter (ACIA), or any other communications chip that employs a standard asynchronous serial system. There are eight selectable serial data communication formats.
  - Data length: 7 or 8 bits
  - Stop bit length: 1 or 2 bits
  - Parity: Even, odd, or none
  - Receive error detection: Parity, framing, and overrun errors
  - Break detection: Break is detected when a framing error is followed by at least one frame at the space 0 level (low level). It is also detected by reading the RxD level directly from the serial port register when a framing error occurs.
- Clock synchronous serial communication:
  - Serial data communication is synchronized with a clock signal. This module can communicate with other chips having a clock synchronous communication function. There is one serial data communication format.
  - Data length: 8 bits
  - Receive error detection: Overrun errors
- Full duplex communication: The transmitting and receiving sections are independent, so this module can transmit and receive simultaneously. Both sections use 16-stage FIFO buffering, so high-speed continuous data transfer is possible in both the transmit and receive directions.
- On-chip baud rate generator with selectable bit rates
- Internal or external transmit/receive clock source: From either baud rate generator (internal) or SCK pin (external)

chanhvinh.com

- Four types of interrupts: Transmit-FIFO-data-empty interrupt, break interrupt, receive-FIFO-data-full interrupt, and receive-error interrupts are requested independently.
- When this module is not in use, it can be stopped by halting the clock supplied to it, saving power.
- In asynchronous mode, on-chip modem control functions ($\overline{\text{RTS}}$ and $\overline{\text{CTS}}$) (only channel 1 on SH7268, only channels 1, 5, and 7 on SH7269).
- The quantity of data in the transmit and receive FIFO data registers and the number of receive errors of the receive data in the receive FIFO data register can be ascertained.
- A time-out error (DR) can be detected when receiving in asynchronous mode.
- In asynchronous mode, the base clock frequency can be either 16 or 8 times the bit rate.
- When an internal clock is selected as a clock source and the SCK pin is used as an input pin in asynchronous mode, either normal mode or double-speed mode can be selected for the baud rate generator.

chanhvinh.com

Figure 16.1 shows a block diagram. Note that some channels do not have $\overline{\text{CTS}}$ and $\overline{\text{RTS}}$ pins.

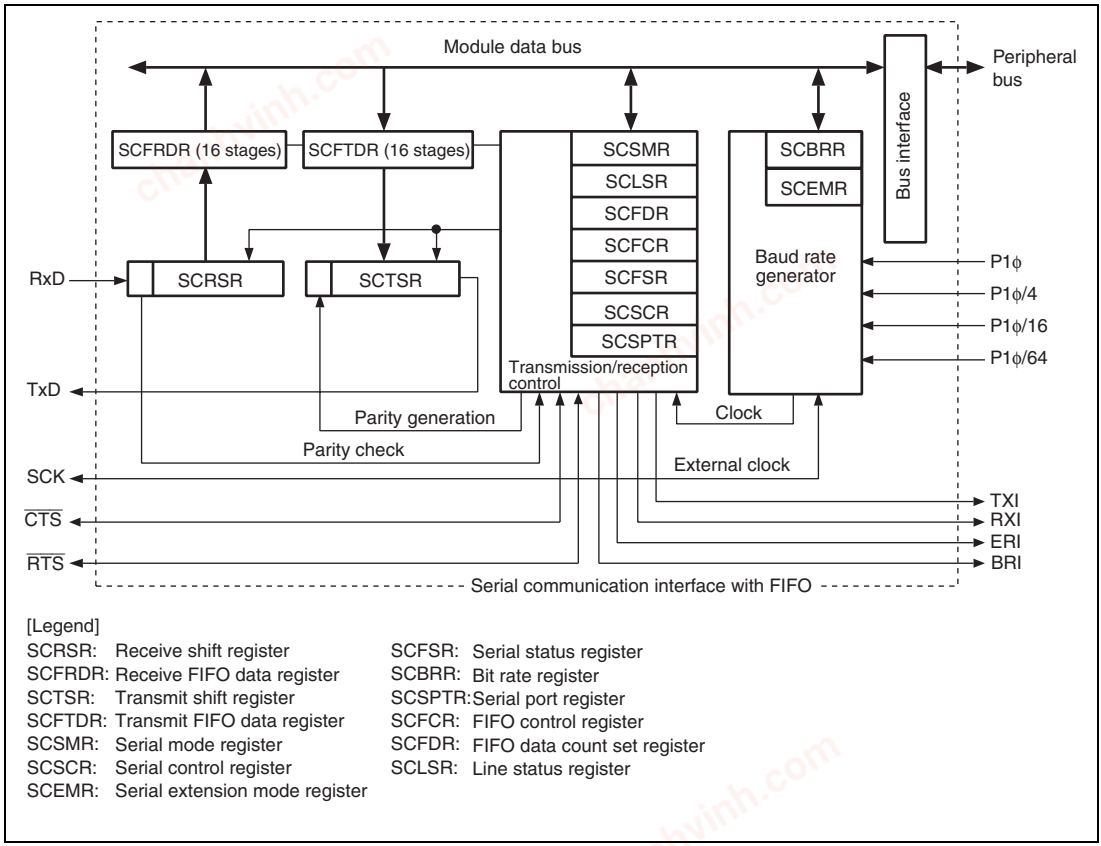

Figure 16.1 Block Diagram

chanhvinh.com

16.2 Input/Output Pins

Table 16.1 shows the pin configuration.

Table 16.1 Pin Configuration

Channel	Pin Name	Symbol	I/O	Function
0 to 7	Serial clock pins	SCK0 to SCK7	I/O	Clock I/O
	Receive data pins	RxD0 to RxD7	Input	Receive data input
	Transmit data pins	TxD0 to TxD7	Output	Transmit data output
1, 5, 7	Request to send pins	$\overline{\text{RTS1}}$, $\overline{\text{RTS5}}$*, $\overline{\text{RTS7}}$*	I/O	Request to send
	Clear to send pins	$\overline{\text{CTS1}}$, $\overline{\text{CTS5}}$*, $\overline{\text{CTS7}}$*	I/O	Clear to send

Note: * Pins $\overline{\text{RTS5}}$, $\overline{\text{CTS5}}$, $\overline{\text{RTS7}}$, and $\overline{\text{CTS7}}$ cannot be used in the SH7268 Group.

chanhvinh.com

16.3 Register Descriptions

This module has the following registers.

Table 16.2 Register Configuration

Channel	Register Name	Abbreviation	R/W	Initial Value	Address	Access Size
0	Serial mode register_0	SCSMR_0	R/W	H'0000	H'E8007000	16
	Bit rate register_0	SCBRR_0	R/W	H'FF	H'E8007004	8
	Serial control register_0	SCSCR_0	R/W	H'0000	H'E8007008	16
	Transmit FIFO data register_0	SCFTDR_0	W	Undefined	H'E800700C	8
	Serial status register_0	SCFSR_0	R/(W)*[1]	H'0060	H'E8007010	16
	Receive FIFO data register_0	SCFRDR_0	R	Undefined	H'E8007014	8
	FIFO control register_0	SCFCR_0	R/W	H'0000	H'E8007018	16
	FIFO data count register_0	SCFDR_0	R	H'0000	H'E800701C	16
	Serial port register_0	SCSPTR_0	R/W	H'0050	H'E8007020	16
	Line status register_0	SCLSR_0	R/(W)*[2]	H'0000	H'E8007024	16
	Serial extension mode register_0	SCEMR_0	R/W	H'0000	H'E8007028	16
1	Serial mode register_1	SCSMR_1	R/W	H'0000	H'E8007800	16
	Bit rate register_1	SCBRR_1	R/W	H'FF	H'E8007804	8
	Serial control register_1	SCSCR_1	R/W	H'0000	H'E8007808	16
	Transmit FIFO data register_1	SCFTDR_1	W	Undefined	H'E800780C	8
	Serial status register_1	SCFSR_1	R/(W)*[1]	H'0060	H'E8007810	16
	Receive FIFO data register_1	SCFRDR_1	R	Undefined	H'E8007814	8
	FIFO control register_1	SCFCR_1	R/W	H'0000	H'E8007818	16
	FIFO data count register_1	SCFDR_1	R	H'0000	H'E800781C	16
	Serial port register_1	SCSPTR_1	R/W	H'0050	H'E8007820	16
	Line status register_1	SCLSR_1	R/(W)*[2]	H'0000	H'E8007824	16
	Serial extension mode register_1	SCEMR_1	R/W	H'0000	H'E8007828	16

chanhvinh.com

Channel	Register Name	Abbreviation	R/W	Initial Value	Address	Access Size
2	Serial mode register_2	SCSMR_2	R/W	H'0000	H'E8008000	16
	Bit rate register_2	SCBRR_2	R/W	H'FF	H'E8008004	8
	Serial control register_2	SCSCR_2	R/W	H'0000	H'E8008008	16
	Transmit FIFO data register_2	SCFTDR_2	W	Undefined	H'E800800C	8
	Serial status register_2	SCFSR_2	R/(W)*[1]	H'0060	H'E8008010	16
	Receive FIFO data register_2	SCFRDR_2	R	Undefined	H'E8008014	8
	FIFO control register_2	SCFCR_2	R/W	H'0000	H'E8008018	16
	FIFO data count register_2	SCFDR_2	R	H'0000	H'E800801C	16
	Serial port register_2	SCSPTR_2	R/W	H'0050	H'E8008020	16
	Line status register_2	SCLSR_2	R/(W)*[2]	H'0000	H'E8008024	16
	Serial extension mode register_2	SCEMR_2	R/W	H'0000	H'E8008028	16
3	Serial mode register_3	SCSMR_3	R/W	H'0000	H'E8008800	16
	Bit rate register_3	SCBRR_3	R/W	H'FF	H'E8008804	8
	Serial control register_3	SCSCR_3	R/W	H'0000	H'E8008808	16
	Transmit FIFO data register_3	SCFTDR_3	W	Undefined	H'E800880C	8
	Serial status register_3	SCFSR_3	R/(W)*[1]	H'0060	H'E8008810	16
	Receive FIFO data register_3	SCFRDR_3	R	Undefined	H'E8008814	8
	FIFO control register_3	SCFCR_3	R/W	H'0000	H'E8008818	16
	FIFO data count register_3	SCFDR_3	R	H'0000	H'E800881C	16
	Serial port register_3	SCSPTR_3	R/W	H'0050	H'E8008820	16
	Line status register_3	SCLSR_3	R/(W)*[2]	H'0000	H'E8008824	16
	Serial extension mode register_3	SCEMR_3	R/W	H'0000	H'E8008828	16

chanhvinh.com

Channel	Register Name	Abbreviation	R/W	Initial Value	Address	Access Size
4	Serial mode register_4	SCSMR_4	R/W	H'0000	H'E8009000	16
	Bit rate register_4	SCBRR_4	R/W	H'FF	H'E8009004	8
	Serial control register_4	SCSCR_4	R/W	H'0000	H'E8009008	16
	Transmit FIFO data register_4	SCFTDR_4	W	Undefined	H'E800900C	8
	Serial status register_4	SCFSR_4	R/(W)*[1]	H'0060	H'E8009010	16
	Receive FIFO data register_4	SCFRDR_4	R	Undefined	H'E8009014	8
	FIFO control register_4	SCFCR_4	R/W	H'0000	H'E8009018	16
	FIFO data count register_4	SCFDR_4	R	H'0000	H'E800901C	16
	Serial port register_4	SCSPTR_4	R/W	H'0050	H'E8009020	16
	Line status register_4	SCLSR_4	R/(W)*[2]	H'0000	H'E8009024	16
	Serial extension mode register_4	SCEMR_4	R/W	H'0000	H'E8009028	16
5	Serial mode register_5	SCSMR_5	R/W	H'0000	H'E8009800	16
	Bit rate register_5	SCBRR_5	R/W	H'FF	H'E8009804	8
	Serial control register_5	SCSCR_5	R/W	H'0000	H'E8009808	16
	Transmit FIFO data register_5	SCFTDR_5	W	Undefined	H'E800980C	8
	Serial status register_5	SCFSR_5	R/(W)*[1]	H'0060	H'E8009810	16
	Receive FIFO data register_5	SCFRDR_5	R	Undefined	H'E8009814	8
	FIFO control register_5	SCFCR_5	R/W	H'0000	H'E8009818	16
	FIFO data count register_5	SCFDR_5	R	H'0000	H'E800981C	16
	Serial port register_5	SCSPTR_5	R/W	H'0050	H'E8009820	16
	Line status register_5	SCLSR_5	R/(W)*[2]	H'0000	H'E8009824	16
	Serial extension mode register_5	SCEMR_5	R/W	H'0000	H'E8009828	16

chanhvinh.com

Channel	Register Name	Abbreviation	R/W	Initial Value	Address	Access Size
6	Serial mode register_6	SCSMR_6	R/W	H'0000	H'E800A000	16
	Bit rate register_6	SCBRR_6	R/W	H'FF	H'E800A004	8
	Serial control register_6	SCSCR_6	R/W	H'0000	H'E800A008	16
	Transmit FIFO data register_6	SCFTDR_6	W	Undefined	H'E800A00C	8
	Serial status register_6	SCFSR_6	R/(W)*[1]	H'0060	H'E800A010	16
	Receive FIFO data register_6	SCFRDR_6	R	Undefined	H'E800A014	8
	FIFO control register_6	SCFCR_6	R/W	H'0000	H'E800A018	16
	FIFO data count register_6	SCFDR_6	R	H'0000	H'E800A01C	16
	Serial port register_6	SCSPTR_6	R/W	H'0050	H'E800A020	16
	Line status register_6	SCLSR_6	R/(W)*[2]	H'0000	H'E800A024	16
	Serial extension mode register_6	SCEMR_6	R/W	H'0000	H'E800A028	16
7	Serial mode register_7	SCSMR_7	R/W	H'0000	H'E800A800	16
	Bit rate register_7	SCBRR_7	R/W	H'FF	H'E800A804	8
	Serial control register_7	SCSCR_7	R/W	H'0000	H'E800A808	16
	Transmit FIFO data register_7	SCFTDR_7	W	Undefined	H'E800A80C	8
	Serial status register_7	SCFSR_7	R/(W)*[1]	H'0060	H'E800A810	16
	Receive FIFO data register_7	SCFRDR_7	R	Undefined	H'E800A814	8
	FIFO control register_7	SCFCR_7	R/W	H'0000	H'E800A818	16
	FIFO data count register_7	SCFDR_7	R	H'0000	H'E800A81C	16
	Serial port register_7	SCSPTR_7	R/W	H'0050	H'E800A820	16
	Line status register_7	SCLSR_7	R/(W)*[2]	H'0000	H'E800A824	16
	Serial extension mode register_7	SCEMR_7	R/W	H'0000	H'E800A828	16

Notes: 1. Only 0 can be written to clear the flag. Bits 15 to 8, 3, and 2 are read-only bits that cannot be modified.

2. Only 0 can be written to clear the flag. Bits 15 to 1 are read-only bits that cannot be modified.

chanhvinh.com

16.3.1 Receive Shift Register (SCRSR)

SCRSR receives serial data. Data input at the RxD pin is loaded into SCRSR in the order received, LSB (bit 0) first, converting the data to parallel form. When one byte has been received, it is automatically transferred to the receive FIFO data register (SCFRDR).

The CPU cannot read or write to SCRSR directly.

Bit:	7	6	5	4	3	2	1	0
Initial value:	-	-	-	-	-	-	-	-
R/W:	-	-	-	-	-	-	-	-

16.3.2 Receive FIFO Data Register (SCFRDR)

SCFRDR is a 16-byte FIFO register that stores serial receive data. The reception of one byte of serial data is complete when the received data is moved from the receive shift register (SCRSR) to SCFRDR for storage. Continuous reception is possible until 16 bytes are stored. The CPU can read but not write to SCFRDR. If data is read when there is no receive data in the SCFRDR, the value is undefined.

When SCFRDR is full of receive data, subsequent serial data is lost.

Bit:	7	6	5	4	3	2	1	0
Initial value:	-	-	-	-	-	-	-	-
R/W:	R	R	R	R	R	R	R	R

chanhvinh.com

16.3.3 Transmit Shift Register (SCTSR)

SCTSR transmits serial data. Transmit data is loaded from the transmit FIFO data register (SCFTDR) into SCTSR, then the data is transmitted serially from the TxD pin, LSB (bit 0) first. After one data byte has been transmitted, the next transmit data is automatically loaded from SCFTDR into SCTSR and transmission is started again.

The CPU cannot read from or write to SCTSR directly.

Bit:	7	6	5	4	3	2	1	0
Initial value:	-	-	-	-	-	-	-	-
R/W:	-	-	-	-	-	-	-	-

16.3.4 Transmit FIFO Data Register (SCFTDR)

SCFTDR is a 16-byte FIFO register that stores data for serial transmission. When the transmit shift register (SCTSR) empty is detected, transmit data written in the SCFTDR is moved to SCTSR and serial transmission is started. Continuous serial transmission is performed until there is no transmit data left in SCFTDR. The CPU can write to SCFTDR at all times.

When SCFTDR is full of transmit data (16 bytes), no more data can be written. If writing of new data is attempted, the data is ignored.

Bit:	7	6	5	4	3	2	1	0
Initial value:	-	-	-	-	-	-	-	-
R/W:	W	W	W	W	W	W	W	W

chanhvinh.com

16.3.5 Serial Mode Register (SCSMR)

SCSMR specifies the serial communication format and selects the clock source for the baud rate generator.

The CPU can always read from and write to SCSMR.

Bit:	15	14	13	12	11	10	9	8	7	6	5	4	3	2	1	0
	-	-	-	-	-	-	-	-	C/$\overline{A}$	CHR	PE	O/$\overline{E}$	STOP	-	CKS[1:0]	
Initial value:	0	0	0	0	0	0	0	0	0	0	0	0	0	0	0	0
R/W:	R	R	R	R	R	R	R	R	R/W	R/W	R/W	R/W	R/W	R	R/W	R/W

Bit	Bit Name	Initial Value	R/W	Description
15 to 8	—	All 0	R	Reserved These bits are always read as 0. The write value should always be 0.
7	C/$\overline{A}$	0	R/W	Communication Mode Selects operating mode from asynchronous and clock synchronous modes. 0: Asynchronous mode 1: Clock synchronous mode
6	CHR	0	R/W	Character Length Selects 7-bit or 8-bit data length in asynchronous mode. In the clock synchronous mode, the data length is always 8 bits, regardless of the CHR setting. 0: 8-bit data 1: 7-bit data* Note: * When 7-bit data is selected, the MSB (bit 7) of the transmit FIFO data register is not transmitted.

chanhvinh.com

Bit	Bit Name	Initial Value	R/W	Description
5	PE	0	R/W	Parity Enable Selects whether to add a parity bit to transmit data and to check the parity of receive data, in asynchronous mode. In clock synchronous mode, a parity bit is neither added nor checked, regardless of the PE setting. 0: Parity bit not added or checked 1: Parity bit added and checked* Note: * When PE is set to 1, an even or odd parity bit is added to transmit data, depending on the parity mode (O/$\overline{E}$) setting. Receive data parity is checked according to the even/odd (O/$\overline{E}$) mode setting.
4	O/$\overline{E}$	0	R/W	Parity Mode Selects even or odd parity when parity bits are added and checked. The O/$\overline{E}$ setting is used only in asynchronous mode and only when the parity enable bit (PE) is set to 1 to enable parity addition and checking. The O/$\overline{E}$ setting is ignored in clock synchronous mode, or in asynchronous mode when parity addition and checking is disabled. 0: Even parity*[1] 1: Odd parity*[2] Notes: 1. If even parity is selected, the parity bit is added to transmit data to make an even number of 1s in the transmitted character and parity bit combined. Receive data is checked to see if it has an even number of 1s in the received character and parity bit combined. 2. If odd parity is selected, the parity bit is added to transmit data to make an odd number of 1s in the transmitted character and parity bit combined. Receive data is checked to see if it has an odd number of 1s in the received character and parity bit combined.

chanhvinh.com

Bit	Bit Name	Initial Value	R/W	Description
3	STOP	0	R/W	Stop Bit Length Selects one or two bits as the stop bit length in asynchronous mode. This setting is used only in asynchronous mode. It is ignored in clock synchronous mode because no stop bits are added. When receiving, only the first stop bit is checked, regardless of the STOP bit setting. If the second stop bit is 1, it is treated as a stop bit, but if the second stop bit is 0, it is treated as the start bit of the next incoming character. 0: One stop bit When transmitting, a single 1-bit is added at the end of each transmitted character. 1: Two stop bits When transmitting, two 1 bits are added at the end of each transmitted character.
2	—	0	R	Reserved This bit is always read as 0. The write value should always be 0.
1, 0	CKS[1:0]	00	R/W	Clock Select Select the internal clock source of the on-chip baud rate generator. For further information on the clock source, bit rate register settings, and baud rate, see section 16.3.8, Bit Rate Register (SCBRR). 00: P1ϕ 01: P1ϕ/4 10: P1ϕ/16 11: P1ϕ/64 Note: P1ϕ: Peripheral clock

chanhvinh.com

16.3.6 Serial Control Register (SCSCR)

SCSCR enables/disables the transmitter/receiver operation and interrupt requests, and selects the transmit/receive clock source. The CPU can always read and write to SCSCR.

Bit:	15	14	13	12	11	10	9	8	7	6	5	4	3	2	1	0
	-	-	-	-	-	-	-	-	TIE	RIE	TE	RE	REIE	-	CKE[1:0]	
Initial value:	0	0	0	0	0	0	0	0	0	0	0	0	0	0	0	0
R/W:	R	R	R	R	R	R	R	R	R/W	R/W	R/W	R/W	R/W	R	R/W	R/W

Bit	Bit Name	Initial Value	R/W	Description
15 to 8	—	All 0	R	Reserved These bits are always read as 0. The write value should always be 0.
7	TIE	0	R/W	Transmit Interrupt Enable Enables or disables the transmit-FIFO-data-empty interrupt (TXI) requested when the serial transmit data is transferred from the transmit FIFO data register (SCFTDR) to the transmit shift register (SCTSR), when the quantity of data in the transmit FIFO register becomes less than the specified number of transmission triggers, and when the TDFE flag in the serial status register (SCFSR) is set to1. 0: Transmit-FIFO-data-empty interrupt request (TXI) is disabled 1: Transmit-FIFO-data-empty interrupt request (TXI) is enabled* Note: * The TXI interrupt request can be cleared by writing a greater quantity of transmit data than the specified transmission trigger number to SCFTDR and by clearing TDFE to 0 after reading 1 from TDFE, or can be cleared by clearing TIE to 0.

chanhvinh.com

Bit	Bit Name	Initial Value	R/W	Description
6	RIE	0	R/W	Receive Interrupt Enable Enables or disables the receive FIFO data full (RXI) interrupts requested when the RDF flag or DR flag in serial status register (SCFSR) is set to1, receive-error (ERI) interrupts requested when the ER flag in SCFSR is set to1, and break (BRI) interrupts requested when the BRK flag in SCFSR or the ORER flag in line status register (SCLSR) is set to1. 0: Receive FIFO data full interrupt (RXI), receive-error interrupt (ERI), and break interrupt (BRI) requests are disabled 1: Receive FIFO data full interrupt (RXI), receive-error interrupt (ERI), and break interrupt (BRI) requests are enabled* Note: * RXI interrupt requests can be cleared by reading the DR or RDF flag after it has been set to 1, then clearing the flag to 0, or by clearing RIE to 0. ERI or BRI interrupt requests can be cleared by reading the ER, BR or ORER flag after it has been set to 1, then clearing the flag to 0, or by clearing RIE and REIE to 0.
5	TE	0	R/W	Transmit Enable Enables or disables the serial transmitter. 0: Transmitter disabled 1: Transmitter enabled* Note: * Serial transmission starts after writing of transmit data into SCFTDR. Select the transmit format in SCSMR and SCFCR and reset the transmit FIFO before setting TE to 1.

chanhvinh.com

Bit	Bit Name	Initial Value	R/W	Description
4	RE	0	R/W	Receive Enable Enables or disables the serial receiver. 0: Receiver disabled*[1] 1: Receiver enabled*[2] Notes: 1. Clearing RE to 0 does not affect the receive flags (DR, ER, BRK, RDF, FER, PER, and ORER). These flags retain their previous values. 2. Serial reception starts when a start bit is detected in asynchronous mode, or synchronous clock is detected in clock synchronous mode. Select the receive format in SCSMR and SCFCR and reset the receive FIFO before setting RE to 1.
3	REIE	0	R/W	Receive Error Interrupt Enable Enables or disables the receive-error (ERI) interrupts and break (BRI) interrupts. The setting of REIE bit is valid only when RIE bit is set to 0. 0: Receive-error interrupt (ERI) and break interrupt (BRI) requests are disabled 1: Receive-error interrupt (ERI) and break interrupt (BRI) requests are enabled* Note: * ERI or BRI interrupt requests can be cleared by reading the ER, BR or ORER flag after it has been set to 1, then clearing the flag to 0, or by clearing RIE and REIE to 0. Even if RIE is set to 0, when REIE is set to 1, ERI or BRI interrupt requests are enabled.

chanhvinh.com

Bit	Bit Name	Initial Value	R/W	Description
2	—	0	R	Reserved This bit is always read as 0. The write value should always be 0.
1, 0	CKE[1:0]	00	R/W	Clock Enable Select the clock source and enable or disable clock output from the SCK pin. Depending on CKE[1:0], the SCK pin can be used for serial clock output or serial clock input. If serial clock output is set in clock synchronous mode, set the C/$\overline{A}$ bit in SCSMR to 1, and then set CKE[1:0]. • Asynchronous mode 00: Internal clock, SCK pin used for input pin (input signal is ignored) 01: Internal clock, SCK pin used for clock output (The output clock frequency is either 16 or 8 times the bit rate.) 10: External clock, SCK pin used for clock input (The input clock frequency is either 16 or 8 times the bit rate.) 11: Setting prohibited • Clock synchronous mode 00: Internal clock, SCK pin used for serial clock output 01: Internal clock, SCK pin used for serial clock output 10: External clock, SCK pin used for serial clock input 11: Setting prohibited

chanhvinh.com

16.3.7 Serial Status Register (SCFSR)

SCFSR is a 16-bit register. The upper 8 bits indicate the number of receive errors in the receive FIFO data register, and the lower 8 bits indicate the status flag indicating operating state.

The CPU can always read and write to SCFSR, but cannot write 1 to the status flags (ER, TEND, TDFE, BRK, RDF, and DR). These flags can be cleared to 0 only if they have first been read (after being set to 1). The PER flag (bits 15 to 12 and bit 2) and the FER flag (bits 11 to 8 and bit 3) are read-only bits that cannot be written.

Bit:	15	14	13	12	11	10	9	8	7	6	5	4	3	2	1	0
	PER[3:0]				FER[3:0]				ER	TEND	TDFE	BRK	FER	PER	RDF	DR
Initial value:	0	0	0	0	0	0	0	0	0	1	1	0	0	0	0	0
R/W:	R	R	R	R	R	R	R	R	R/(W)*	R/(W)*	R/(W)*	R/(W)*	R	R	R/(W)*	R/(W)*

Note: * Only 0 can be written to clear the flag after 1 is read.

Bit	Bit Name	Initial Value	R/W	Description
15 to 12	PER[3:0]	0000	R	Number of Parity Errors Indicate the quantity of data including a parity error in the receive data stored in the receive FIFO data register (SCFRDR). The value indicated by bits 15 to 12 after the ER bit in SCFSR is set, represents the number of parity errors in SCFRDR. When parity errors have occurred in all 16-byte receive data in SCFRDR, PER[3:0] shows 0000.
11 to 8	FER[3:0]	0000	R	Number of Framing Errors Indicate the quantity of data including a framing error in the receive data stored in SCFRDR. The value indicated by bits 11 to 8 after the ER bit in SCFSR is set, represents the number of framing errors in SCFRDR. When framing errors have occurred in all 16-byte receive data in SCFRDR, FER[3:0] shows 0000.

chanhvinh.com

Bit	Bit Name	Initial Value	R/W	Description
7	ER	0	R/(W)*	Receive Error Indicates the occurrence of a framing error, or of a parity error when receiving data that includes parity.*[1] 0: Receiving is in progress or has ended normally [Clearing conditions] • ER is cleared to 0 a power-on reset • ER is cleared to 0 when the chip is when 0 is written after 1 is read from ER 1: A framing error or parity error has occurred. [Setting conditions] • ER is set to 1 when the stop bit is 0 after checking whether or not the last stop bit of the received data is 1 at the end of one data receive operation*[2] • ER is set to 1 when the total number of 1s in the receive data plus parity bit does not match the even/odd parity specified by the O/$\overline{E}$ bit in SCSMR Notes: 1. Clearing the RE bit to 0 in SCSCR does not affect the ER bit, which retains its previous value. Even if a receive error occurs, the receive data is transferred to SCFRDR and the receive operation is continued. Whether or not the data read from SCFRDR includes a receive error can be detected by the FER and PER bits in SCFSR. 2. In two stop bits mode, only the first stop bit is checked; the second stop bit is not checked.

chanhvinh.com

Bit	Bit Name	Initial Value	R/W	Description
6	TEND	1	R/(W)*	Transmit End Indicates that when the last bit of a serial character was transmitted, SCFTDR did not contain valid data, so transmission has ended. 0: Transmission is in progress [Clearing condition] • TEND is cleared to 0 when 0 is written after 1 is read from TEND after transmit data is written in SCFTDR*[1] 1: End of transmission [Setting conditions] • TEND is set to 1 when the chip is a power-on reset • TEND is set to 1 when TE is cleared to 0 in the serial control register (SCSCR) • TEND is set to 1 when SCFTDR does not contain receive data when the last bit of a one-byte serial character is transmitted Note: 1. Do not use this bit as a transmit end flag when the direct memory access controller writes data to SCFTDR due to a TXI interrupt request.

chanhvinh.com

Bit	Bit Name	Initial Value	R/W	Description
5	TDFE	1	R/(W)*	Transmit FIFO Data Empty Indicates that data has been transferred from the transmit FIFO data register (SCFTDR) to the transmit shift register (SCTSR), the quantity of data in SCFTDR has become less than the transmission trigger number specified by the TTRG[1:0] bits in the FIFO control register (SCFCR), and writing of transmit data to SCFTDR is enabled. 0: The quantity of transmit data written to SCFTDR is greater than the specified transmission trigger number [Clearing conditions] • TDFE is cleared to 0 when data exceeding the specified transmission trigger number is written to SCFTDR after 1 is read from TDFE and then 0 is written • TDFE is cleared to 0 when direct memory access controller is activated by transmit FIFO data empty interrupt (TXI) and write data exceeding the specified transmission trigger number to SCFTDR 1: The quantity of transmit data in SCFTDR is less than or equal to the specified transmission trigger number*[1] [Setting conditions] • TDFE is set to 1 by a power-on reset • TDFE is set to 1 when the quantity of transmit data in SCFTDR becomes less than or equal to the specified transmission trigger number as a result of transmission Note: 1. Since SCFTDR is a 16-byte FIFO register, the maximum quantity of data that can be written when TDFE is 1 is "16 minus the specified transmission trigger number". If an attempt is made to write additional data, the data is ignored. The quantity of data in SCFTDR is indicated by the upper 8 bits of SCFDR.

chanhvinh.com

Bit	Bit Name	Initial Value	R/W	Description
4	BRK	0	R/(W)*	Break Detection Indicates that a break signal has been detected in receive data. 0: No break signal received [Clearing conditions] • BRK is cleared to 0 when the chip is a power-on reset • BRK is cleared to 0 when software reads BRK after it has been set to 1, then writes 0 to BRK 1: Break signal received*[1] [Setting condition] • BRK is set to 1 when data including a framing error is received, and a framing error occurs with space 0 in the subsequent receive data Note: 1. When a break is detected, transfer of the receive data (H'00) to SCFRDR stops after detection. When the break ends and the receive signal becomes mark 1, the transfer of receive data resumes.
3	FER	0	R	Framing Error Indication Indicates a framing error in the data read from the next receive FIFO data register (SCFRDR) in asynchronous mode. 0: No receive framing error occurred in the next data read from SCFRDR [Clearing conditions] • FER is cleared to 0 when the chip undergoes a power-on reset • FER is cleared to 0 when no framing error is present in the next data read from SCFRDR 1: A receive framing error occurred in the next data read from SCFRDR. [Setting condition] • FER is set to 1 when a framing error is present in the next data read from SCFRDR

chanhvinh.com

Bit	Bit Name	Initial Value	R/W	Description
2	PER	0	R	Parity Error Indication Indicates a parity error in the data read from the next receive FIFO data register (SCFRDR) in asynchronous mode. 0: No receive parity error occurred in the next data read from SCFRDR [Clearing conditions] • PER is cleared to 0 when the chip undergoes a power-on reset • PER is cleared to 0 when no parity error is present in the next data read from SCFRDR 1: A receive parity error occurred in the next data read from SCFRDR [Setting condition] • PER is set to 1 when a parity error is present in the next data read from SCFRDR

chanhvinh.com

Bit	Bit Name	Initial Value	R/W	Description
1	RDF	0	R/(W)*	Receive FIFO Data Full Indicates that receive data has been transferred to the receive FIFO data register (SCFRDR), and the quantity of data in SCFRDR has become more than the receive trigger number specified by the RTRG[1:0] bits in the FIFO control register (SCFCR). 0: The quantity of transmit data written to SCFRDR is less than the specified receive trigger number [Clearing conditions] • RDF is cleared to 0 by a power-on reset, standby mode • RDF is cleared to 0 when the SCFRDR is read until the quantity of receive data in SCFRDR becomes less than the specified receive trigger number after 1 is read from RDF and then 0 is written • RDF is cleared to 0 when the direct memory access controller is activated by receive FIFO data full interrupt (RXI) and read SCFRDR until the quantity of receive data in SCFRDR becomes less than the specified receive trigger number 1: The quantity of receive data in SCFRDR is more than the specified receive trigger number [Setting condition] • RDF is set to 1 when a quantity of receive data more than the specified receive trigger number is stored in SCFRDR*[1] Note: 1. As SCFTDR is a 16-byte FIFO register, the maximum quantity of data that can be read when RDF is 1 becomes the specified receive trigger number. If an attempt is made to read after all the data in SCFRDR has been read, the data is undefined. The quantity of receive data in SCFRDR is indicated by the lower 8 bits of SCFDR.

chanhvinh.com

Bit	Bit Name	Initial Value	R/W	Description
0	DR	0	R/(W)*	Receive Data Ready Indicates that the quantity of data in the receive FIFO data register (SCFRDR) is less than the specified receive trigger number, and that the next data has not yet been received after the elapse of 15 ETU from the last stop bit in asynchronous mode. In clock synchronous mode, this bit is not set to 1. 0: Receiving is in progress, or no receive data remains in SCFRDR after receiving ended normally [Clearing conditions] • DR is cleared to 0 when the chip undergoes a power-on reset • DR is cleared to 0 when all receive data are read after 1 is read from DR and then 0 is written. • DR is cleared to 0 when all receive data are read after the direct memory access controller is activated by receive FIFO data full interrupt (RXI). 1: Next receive data has not been received [Setting condition] • DR is set to 1 when SCFRDR contains less data than the specified receive trigger number, and the next data has not yet been received after the elapse of 15 ETU from the last stop bit.*[1] Note: 1. This is equivalent to 1.5 frames with the 8-bit, 1-stop-bit format. (ETU: elementary time unit)

Note: * Only 0 can be written to clear the flag after 1 is read.

chanhvinh.com

16.3.8 Bit Rate Register (SCBRR)

SCBRR is an 8-bit register that is used with the CKS1 and CKS0 bits in the serial mode register (SCSMR) and the BGDM and ABCS bits in the serial extension mode register (SCEMR) to determine the serial transmit/receive bit rate.

The CPU can always read and write to SCBRR. SCBRR is initialized to H'FF by a power-on reset. Each channel has independent baud rate generator control, so different values can be set in eight channels.

Bit:	7	6	5	4	3	2	1	0
Initial value:	1	1	1	1	1	1	1	1
R/W:	R/W	R/W	R/W	R/W	R/W	R/W	R/W	R/W

The SCBRR setting is calculated as follows:

- Asynchronous mode:

When baud rate generator operates in normal mode (when the BGDM bit of SCEMR is 0):

$$N = \frac{P1\phi}{64 \times 2^{2n-1} \times B} \times 10^6 - 1$$ (Operation on a base clock with a frequency of 16 times the bit rate)

$$N = \frac{P1\phi}{32 \times 2^{2n-1} \times B} \times 10^6 - 1$$ (Operation on a base clock with a frequency of 8 times the bit rate)

When baud rate generator operates in double speed mode (when the BGDM bit of SCEMR is 1):

$$N = \frac{P1\phi}{32 \times 2^{2n-1} \times B} \times 10^6 - 1$$ (Operation on a base clock with a frequency of 16 times the bit rate)

$$N = \frac{P1\phi}{16 \times 2^{2n-1} \times B} \times 10^6 - 1$$ (Operation on a base clock with a frequency of 8 times the bit rate)

chanhvinh.com

- Clock synchronous mode:

$$N = \frac{P1\phi}{8 \times 2^{2n-1} \times B} \times 10^6 - 1$$

B: Bit rate (bits/s)
N: SCBRR setting for baud rate generator ($0 \leq N \leq 255$)
(The setting must satisfy the electrical characteristics.)
P1ϕ: Operating frequency for peripheral modules (MHz)
n: Baud rate generator clock source (n = 0, 1, 2, 3) (for the clock sources and values of n, see table 16.3.)

Table 16.3 SCSMR Settings

		SCSMR Settings	
n	**Clock Source**	**CKS[1]**	**CKS[0]**
0	P1ϕ	0	0
1	P1ϕ/4	0	1
2	P1ϕ/16	1	0
3	P1ϕ/64	1	1

The bit rate error in asynchronous mode is given by the following formula:

When baud rate generator operates in normal mode (the BGDM bit of SCEMR is 0):

$$\text{Error (\%)} = \left\{ \frac{P1\phi \times 10^6}{(N+1) \times B \times 64 \times 2^{2n-1}} - 1 \right\} \times 100$$ (Operation on a base clock with a frequency of 16 times the bit rate)

$$\text{Error (\%)} = \left\{ \frac{P1\phi \times 10^6}{(N+1) \times B \times 32 \times 2^{2n-1}} - 1 \right\} \times 100$$ (Operation on a base clock with a frequency of 8 times the bit rate)

When baud rate generator operates in double speed mode (the BGDM bit of SCEMR is 1):

$$\text{Error (\%)} = \left\{ \frac{P1\phi \times 10^6}{(N+1) \times B \times 32 \times 2^{2n-1}} - 1 \right\} \times 100$$ (Operation on a base clock with a frequency of 16 times the bit rate)

$$\text{Error (\%)} = \left\{ \frac{P1\phi \times 10^6}{(N+1) \times B \times 16 \times 2^{2n-1}} - 1 \right\} \times 100$$ (Operation on a base clock with a frequency of 8 times the bit rate)

chanhvinh.com

Table 16.4 lists the sample SCBRR settings in asynchronous mode in which a base clock frequency is 16 times the bit rate (the ABCS bit in SCEMR is 0) and the baud rate generator operates in normal mode (the BGDM bit in SCEMR is 1), and table 16.5 lists the sample SCBRR settings in clock synchronous mode.

Table 16.4 Bit Rates and SCBRR Settings (Asynchronous Mode, BGDM = 0, ABCS = 0)

Bit Rate (bits/s)	P1ϕ (MHz)								
	50			60			66.67		
	n	N	Error (%)	n	N	Error (%)	n	N	Error (%)
110	3	221	–0.02						
150	3	162	–0.15	3	194	0.16	3	216	0.01
300	3	80	0.47	3	97	–0.35	3	108	–0.45
600	3	40	–0.76	3	48	–0.35	3	53	0.47
1200	2	80	0.47	2	97	–0.35	2	107	0.47
2400	2	40	–0.76	2	48	–0.35	2	53	0.47
4800	1	80	0.47	1	97	–0.35	1	108	–0.45
9600	1	40	–0.76	1	48	–0.35	1	53	0.47
19200	0	80	0.47	0	97	–0.35	0	108	–0.45
31250	0	49	0.00	0	59	0.00	0	66	–0.50
38400	0	40	–0.76	0	48	–0.35	0	53	0.47

[Legend]

Blank: No setting possible

—: Setting possible, but error occurs

Note: The error rate should be ≤ 1 %.

chanhvinh.com

Table 16.5 Bit Rates and SCBRR Settings (Clock Synchronous Mode)

Bit Rate (bits/s)	P1ϕ (MHz)					
	50		60		66.67	
	n	N	n	N	n	N
500	—	—				
1000	3	194	3	233	—	—
2500	3	77	3	93	3	103
5000	2	155	2	187	2	207
10000	2	77	2	93	2	103
25000	1	124	1	149	1	166
50000	1	62	1	74	1	82
100000	0	124	0	149	0	166
250000	0	49	0	59	0	66
500000	0	24	0	29	—	—
1000000	—	—	0	14	—	—
2000000	—	—	—	—	—	—

[Legend]

Blank: No setting possible

—: Setting possible, but error occurs

chanhvinh.com

Table 16.6 indicates the maximum bit rates in asynchronous mode when the baud rate generator is used. Table 16.7 lists the maximum bit rates in asynchronous mode when the external clock input is used. Table 16.8 lists the maximum bit rates in clock synchronous mode when the external clock input is used (when $t_{Scyc} = 12t_{pcyc}$*).

Note: * Make sure that the electrical characteristics of this LSI and that of a connected LSI are satisfied.

Table 16.6 Maximum Bit Rates for Various Frequencies with Baud Rate Generator (Asynchronous Mode)

	Settings				
P1ϕ (MHz)	BGDM	ABCS	n	N	Maximum Bit Rate (bits/s)
50	0	0	0	0	1562500
		1	0	0	3125000
	1	0	0	0	3125000
		1	0	0	6250000
60	0	0	0	0	1875000
		1	0	0	3750000
	1	0	0	0	3750000
		1	0	0	7500000
66.67	0	0	0	0	2083333
		1	0	0	4166667
	1	0	0	0	4166667
		1	0	0	8333333

chanhvinh.com

Table 16.7 Maximum Bit Rates with External Clock Input (Asynchronous Mode)

P1ϕ (MHz)	External Input Clock (MHz)	Settings ABCS	Maximum Bit Rate (bits/s)
50	12.5000	0	781250
		1	1562500
60	15.0000	0	937500
		1	1875000
66.67	16.6667	0	1041667
		1	2083333

Table 16.8 Maximum Bit Rates with External Clock Input (Clock Synchronous Mode, $t_{Scyc} = 12\ t_{pcyc}$)

P1ϕ (MHz)	External Input Clock (MHz)	Maximum Bit Rate (bits/s)
50	4.1667	4166666.7
60	5.0000	5000000.0
66.67	5.5556	5555555.5

chanhvinh.com

16.3.9 FIFO Control Register (SCFCR)

SCFCR resets the quantity of data in the transmit and receive FIFO data registers, sets the trigger data quantity, and contains an enable bit for loop-back testing. SCFCR can always be read and written to by the CPU.

Bit:	15	14	13	12	11	10	9	8	7	6	5	4	3	2	1	0
	-	-	-	-	-	RSTRG[2:0]			RTRG[1:0]		TTRG[1:0]		MCE	TFRST	RFRST	LOOP
Initial value:	0	0	0	0	0	0	0	0	0	0	0	0	0	0	0	0
R/W:	R	R	R	R	R	R/W	R/W	R/W	R/W	R/W	R/W	R/W	R/W	R/W	R/W	R/W

Bit	Bit Name	Initial Value	R/W	Description
15 to 11	—	All 0	R	Reserved These bits are always read as 0. The write value should always be 0.
10 to 8	RSTRG[2:0]	000	R/W	$\overline{\text{RTS}}$ Output Active Trigger When the quantity of receive data in receive FIFO data register (SCFRDR) becomes more than the number shown below, $\overline{\text{RTS}}$ signal is set to high. 000: 15 001: 1 010: 4 011: 6 100: 8 101: 10 110: 12 111: 14

chanhvinh.com

Bit	Bit Name	Initial Value	R/W	Description
7, 6	RTRG[1:0]	00	R/W	Receive FIFO Data Trigger • Set the quantity of receive data which sets the receive data full (RDF) flag in the serial status register (SCFSR). The RDF flag is set to 1 when the quantity of receive data stored in the receive FIFO register (SCFRDR) is increased more than the set trigger number shown below. • Asynchronous mode • Clock synchronous mode 00: 1 00: 1 01: 4 01: 2 10: 8 10: 8 11: 14 11: 14 Note: In clock synchronous mode, to transfer the receive data using the direct memory access controller, set the receive trigger number to 1. If set to other than 1, CPU must read the receive data left in SCFRDR.
5, 4	TTRG[1:0]	00	R/W	Transmit FIFO Data Trigger Set the quantity of remaining transmit data which sets the transmit FIFO data register empty (TDFE) flag in the serial status register (SCFSR). The TDFE flag is set to 1 when the quantity of transmit data in the transmit FIFO data register (SCFTDR) becomes less than the set trigger number shown below. 00: 8 (8)* 01: 4 (12)* 10: 2 (14)* 11: 0 (16)* Note: * Values in parentheses mean the number of empty bytes in SCFTDR when the TDFE flag is set to 1.

chanhvinh.com

Bit	Bit Name	Initial Value	R/W	Description
3	MCE	0	R/W	Modem Control Enable Enables modem control signals $\overline{\text{CTS}}$ and $\overline{\text{RTS}}$. The MCE bit should always be cleared to 0 for channels 0 and 2 to 7 on the SH7268 and channels 0, 2, 3, 4, and 6 on the SH7269, and when in clock synchronous mode on the SH7268 and SH7269 regardless of the channel. 0: Modem signal disabled* 1: Modem signal enabled Note: * $\overline{\text{CTS}}$ is fixed at active 0 regardless of the input value, and $\overline{\text{RTS}}$ is also fixed at 0.
2	TFRST	0	R/W	Transmit FIFO Data Register Reset Disables the transmit data in the transmit FIFO data register and resets the data to the empty state. 0: Reset operation disabled* 1: Reset operation enabled Note: * Reset operation is executed by a power-on reset.
1	RFRST	0	R/W	Receive FIFO Data Register Reset Disables the receive data in the receive FIFO data register and resets the data to the empty state. 0: Reset operation disabled* 1: Reset operation enabled Note: * Reset operation is executed by a power-on reset.
0	LOOP	0	R/W	Loop-Back Test Internally connects the transmit output pin (TxD) and receive input pin (RxD) and internally connects the $\overline{\text{RTS}}$ pin and $\overline{\text{CTS}}$ pin and enables loop-back testing. 0: Loop back test disabled 1: Loop back test enabled

chanhvinh.com

16.3.10 FIFO Data Count Set Register (SCFDR)

SCFDR is a 16-bit register which indicates the quantity of data stored in the transmit FIFO data register (SCFTDR) and the receive FIFO data register (SCFRDR).

It indicates the quantity of transmit data in SCFTDR with the upper 8 bits, and the quantity of receive data in SCFRDR with the lower 8 bits. SCFDR can always be read by the CPU.

Bit:	15	14	13	12	11	10	9	8	7	6	5	4	3	2	1	0
	-	-	-	T[4:0]					-	-	-	R[4:0]				
Initial value:	0	0	0	0	0	0	0	0	0	0	0	0	0	0	0	0
R/W:	R	R	R	R	R	R	R	R	R	R	R	R	R	R	R	R

Bit	Bit Name	Initial Value	R/W	Description
15 to 13	—	All 0	R	Reserved These bits are always read as 0. The write value should always be 0.
12 to 8	T[4:0]	00000	R	T4 to T0 bits indicate the quantity of non-transmitted data stored in SCFTDR. H'00 means no transmit data, and H'10 means that SCFTDR is full of transmit data.
7 to 5	—	All 0	R	Reserved These bits are always read as 0. The write value should always be 0.
4 to 0	R[4:0]	00000	R	R4 to R0 bits indicate the quantity of receive data stored in SCFRDR. H'00 means no receive data, and H'10 means that SCFRDR full of receive data.

chanhvinh.com

16.3.11 Serial Port Register (SCSPTR)

SCSPTR controls input/output and data of pins multiplexed to the functions of this module. Bits 7 and 6 can control input/output data of $\overline{\text{RTS}}$ pin. Bits 5 and 4 can control input/output data of $\overline{\text{CTS}}$ pin. Bits 3 and 2 can control input/output data of SCK pin. Bits 1 and 0 can input data from RxD pin and output data to TxD pin, so they control break of serial transmitting/receiving.

The CPU can always read and write to SCSPTR.

Bit:	15	14	13	12	11	10	9	8	7	6	5	4	3	2	1	0
	-	-	-	-	-	-	-	-	RTSIO	RTSDT	CTSIO	CTSDT	SCKIO	SCKDT	SPB2IO	SPB2DT
Initial value:	0	0	0	0	0	0	0	0	0	1	0	1	0	0	0	0
R/W:	R	R	R	R	R	R	R	R	R/W	R/W	R/W	R/W	R/W	R/W	R/W	R/W

Bit	Bit Name	Initial Value	R/W	Description
15 to 8	—	All 0	R	Reserved These bits are always read as 0. The write value should always be 0.
7	RTSIO	0	R/W	$\overline{\text{RTS}}$ Port Input/Output Indicates input or output of the serial port $\overline{\text{RTS}}$ pin. When the $\overline{\text{RTS}}$ pin is actually used as a port outputting the RTSDT bit value, the MCE bit in SCFCR should be cleared to 0. 0: RTSDT bit value not output to $\overline{\text{RTS}}$ pin 1: RTSDT bit value output to $\overline{\text{RTS}}$ pin
6	RTSDT	1	R/W	$\overline{\text{RTS}}$ Port Data Indicates the input/output data of the serial port $\overline{\text{RTS}}$ pin. Input/output is specified by the RTSIO bit. For output, the RTSDT bit value is output to the $\overline{\text{RTS}}$ pin. The $\overline{\text{RTS}}$ pin status is read from the RTSDT bit regardless of the RTSIO bit setting. However, $\overline{\text{RTS}}$ input/output must be set in the PFC. 0: Input/output data is low level 1: Input/output data is high level

chanhvinh.com

Bit	Bit Name	Initial Value	R/W	Description
5	CTSIO	0	R/W	$\overline{\text{CTS}}$ Port Input/Output Indicates input or output of the serial port $\overline{\text{CTS}}$ pin. When the $\overline{\text{CTS}}$ pin is actually used as a port outputting the CTSDT bit value, the MCE bit in SCFCR should be cleared to 0. 0: CTSDT bit value not output to $\overline{\text{CTS}}$ pin 1: CTSDT bit value output to $\overline{\text{CTS}}$ pin
4	CTSDT	1	R/W	$\overline{\text{CTS}}$ Port Data Indicates the input/output data of the serial port $\overline{\text{CTS}}$ pin. Input/output is specified by the CTSIO bit. For output, the CTSDT bit value is output to the $\overline{\text{CTS}}$ pin. The $\overline{\text{CTS}}$ pin status is read from the CTSDT bit regardless of the CTSIO bit setting. However, $\overline{\text{CTS}}$ input/output must be set in the PFC. 0: Input/output data is low level 1: Input/output data is high level
3	SCKIO	0	R/W	SCK Port Input/Output Indicates input or output of the serial port SCK pin. When the SCK pin is actually used as a port outputting the SCKDT bit value, the CKE[1:0] bits in SCSCR should be cleared to 0. 0: SCKDT bit value not output to SCK pin 1: SCKDT bit value output to SCK pin
2	SCKDT	0	R/W	SCK Port Data Indicates the input/output data of the serial port SCK pin. Input/output is specified by the SCKIO bit. For output, the SCKDT bit value is output to the SCK pin. The SCK pin status is read from the SCKDT bit regardless of the SCKIO bit setting. However, SCK input/output must be set in the PFC. 0: Input/output data is low level 1: Input/output data is high level

chanhvinh.com

Bit	Bit Name	Initial Value	R/W	Description
1	SPB2IO	0	R/W	Serial Port Break Input/Output Indicates input or output of the serial port TxD pin. When the TxD pin is actually used as a port outputting the SPB2DT bit value, the TE bit in SCSCR should be cleared to 0. 0: SPB2DT bit value not output to TxD pin 1: SPB2DT bit value output to TxD pin
0	SPB2DT	0	R/W	Serial Port Break Data Indicates the input data of the RxD pin and the output data of the TxD pin used as serial ports. Input/output is specified by the SPB2IO bit. When the TxD pin is set to output, the SPB2DT bit value is output to the TxD pin. The RxD pin status is read from the SPB2DT bit regardless of the SPB2IO bit setting. However, RxD input and TxD output must be set in the PFC. 0: Input/output data is low level 1: Input/output data is high level

chanhvinh.com

16.3.12 Line Status Register (SCLSR)

The CPU can always read or write to SCLSR, but cannot write 1 to the ORER flag. This flag can be cleared to 0 only if it has first been read (after being set to 1).

Bit:	15	14	13	12	11	10	9	8	7	6	5	4	3	2	1	0
	-	-	-	-	-	-	-	-	-	-	-	-	-	-	-	ORER
Initial value:	0	0	0	0	0	0	0	0	0	0	0	0	0	0	0	0
R/W:	R	R	R	R	R	R	R	R	R	R	R	R	R	R	R	R/(W)*

Note: * Only 0 can be written to clear the flag after 1 is read.

Bit	Bit Name	Initial Value	R/W	Description
15 to 1	—	All 0	R	Reserved These bits are always read as 0. The write value should always be 0.
0	ORER	0	R/(W)*	Overrun Error Indicates the occurrence of an overrun error. 0: Receiving is in progress or has ended normally*[1] [Clearing conditions] • ORER is cleared to 0 when the chip is a power-on reset • ORER is cleared to 0 when 0 is written after 1 is read from ORER. 1: An overrun error has occurred*[2] [Setting condition] • ORER is set to 1 when the next serial receiving is finished while the receive FIFO is full of 16-byte receive data. Notes: 1. Clearing the RE bit to 0 in SCSCR does not affect the ORER bit, which retains its previous value. 2. The receive FIFO data register (SCFRDR) retains the data before an overrun error has occurred, and the next received data is discarded. When the ORER bit is set to 1, the next serial reception cannot be continued.

chanhvinh.com

16.3.13 Serial Extension Mode Register (SCEMR)

The CPU can always read from or write to SCEMR. Setting the BGDM bit in this register to 1 allows the baud rate generator in this module operates in double-speed mode when asynchronous mode is selected (by setting the C/$\overline{A}$ bit in SCSMR to 0) and an internal clock is selected as a clock source and the SCK pin is set as an input pin (by setting the CKE[1:0] bits in SCSCR to 00).

Bit:	15	14	13	12	11	10	9	8	7	6	5	4	3	2	1	0
	-	-	-	-	-	-	-	-	BGDM	-	-	-	-	-	-	ABCS
Initial value:	0	0	0	0	0	0	0	0	0	0	0	0	0	0	0	0
R/W:	R	R	R	R	R	R	R	R	R/W	R	R	R	R	R	R	R/W

Bit	Bit Name	Initial Value	R/W	Description
15 to 8	—	All 0	R	Reserved These bits are always read as 0. The write value should always be 0.
7	BGDM	0	R/W	Baud Rate Generator Double-Speed Mode When the BGDM bit is set to 1, the baud rate generator in this module operates in double-speed mode. This bit is valid only when asynchronous mode is selected by setting the C/$\overline{A}$ bit in SCSMR to 0 and an internal clock is selected as a clock source and the SCK pin is set as an input pin by setting the CKE[1:0] bits in SCSCR to 00. In other settings, this bit is invalid (the baud rate generator operates in normal mode regardless of the BGDM setting). 0: Normal mode 1: Double-speed mode
6 to 1	—	All 0	R	Reserved These bits are always read as 0. The write value should always be 0.
0	ABCS	0	R/W	Base Clock Select in Asynchronous Mode This bit selects the base clock frequency within a bit period in asynchronous mode. This bit is valid only in asynchronous mode (when the C/$\overline{A}$ bit in SCSMR is 0). 0: Base clock frequency is 16 times the bit rate 1: Base clock frequency is 8 times the bit rate

chanhvinh.com

16.4 Operation

16.4.1 Overview

For serial communication, this module has an asynchronous mode in which characters are synchronized individually, and a clock synchronous mode in which communication is synchronized with clock pulses.

This module has a 16-stage FIFO buffer for both transmission and receptions, reducing the overhead of the CPU, and enabling continuous high-speed communication. Furthermore, channel 1 on the SH7268, and channels 1, 5, and 7 on the SH7269, have $\overline{\text{RTS}}$ and $\overline{\text{CTS}}$ signals for use as modem control signals.

The transmission format is selected in the serial mode register (SCSMR), as shown in table 16.9. The clock source is selected by the combination of the CKE1 and CKE0 bits in the serial control register (SCSCR), as shown in table 16.10.

(1) Asynchronous Mode

- Data length is selectable: 7 or 8 bits
- Parity bit is selectable. So is the stop bit length (1 or 2 bits). The combination of the preceding selections constitutes the communication format and character length.
- In receiving, it is possible to detect framing errors, parity errors, receive FIFO data full, overrun errors, receive data ready, and breaks.
- The number of stored data bytes is indicated for both the transmit and receive FIFO registers.
- An internal or external clock can be selected as the clock source.
  - When an internal clock is selected, this module operates using the clock of on-chip baud rate generator.
  - When an external clock is selected, the external clock input must have a frequency 16 or 8 times the bit rate. (The on-chip baud rate generator is not used.)

chanhvinh.com

(2) Clock Synchronous Mode

- The transmission/reception format has a fixed 8-bit data length.
- In receiving, it is possible to detect overrun errors (ORER).
- An internal or external clock can be selected as the clock source.
  - When an internal clock is selected, this module operates using the clock of the on-chip baud rate generator, and outputs this clock to external devices as the synchronous clock.
  - When an external clock is selected, this module operates on the input external synchronous clock not using the on-chip baud rate generator.

Table 16.9 SCSMR Settings and Communication Formats

SCSMR Settings					Communication Format		
Bit 7 C/$\overline{A}$	Bit 6 CHR	Bit 5 PE	Bit 3 STOP	Mode	Data Length	Parity Bit	Stop Bit Length
0	0	0	0	Asynchronous	8 bits	Not set	1 bit
			1				2 bits
		1	0			Set	1 bit
			1				2 bits
	1	0	0		7 bits	Not set	1 bit
			1				2 bits
		1	0			Set	1 bit
			1				2 bits
1	x	x	x	Clock synchronous	8 bits	Not set	None

[Legend]
x: Don't care

chanhvinh.com

Table 16.10 SCSMR and SCSCR Settings and Clock Source Selection

SCSMR	SCSCR		Transmit/Receive Clock	
Bit 7 C/$\overline{A}$	Bit 1, 0 CKE[1:0]	Mode	Clock Source	SCK Pin Function
0	00	Asynchronous	Internal	This module does not use the SCK pin.
	01			Outputs a clock with a frequency 16/8 times the bit rate
	10		External	Inputs a clock with frequency 16/8 times the bit rate
	11		Setting prohibited	
1	0x	Clock synchronous	Internal	Outputs the serial clock
	10		External	Inputs the serial clock
	11		Setting prohibited	

[Legend]

x: Don't care

Note: When using the baud rate generator in double-speed mode (BGMD = 1), select asynchronous mode by setting the C/$\overline{A}$ bit to 0, and select an internal clock as a clock source and the SCK pin is not used (the CKE[1:0] bits set to 00).

chanhvinh.com

16.4.2 Operation in Asynchronous Mode

In asynchronous mode, each transmitted or received character begins with a start bit and ends with a stop bit. Serial communication is synchronized one character at a time.

The transmitting and receiving sections in this module are independent, so full duplex communication is possible. The transmitter and receiver are 16-byte FIFO buffered, so data can be written and read while transmitting and receiving are in progress, enabling continuous transmitting and receiving.

Figure 16.2 shows the general format of asynchronous serial communication.

In asynchronous serial communication, the communication line is normally held in the mark (high) state. This module monitors the line and starts serial communication when the line goes to the space (low) state, indicating a start bit. One serial character consists of a start bit (low), data (LSB first), parity bit (high or low), and stop bit (high), in that order.

When receiving in asynchronous mode, this module synchronizes at the falling edge of the start bit. This module samples each data bit on the eighth or fourth pulse of a clock with a frequency 16 or 8 times the bit rate. Receive data is latched at the center of each bit.

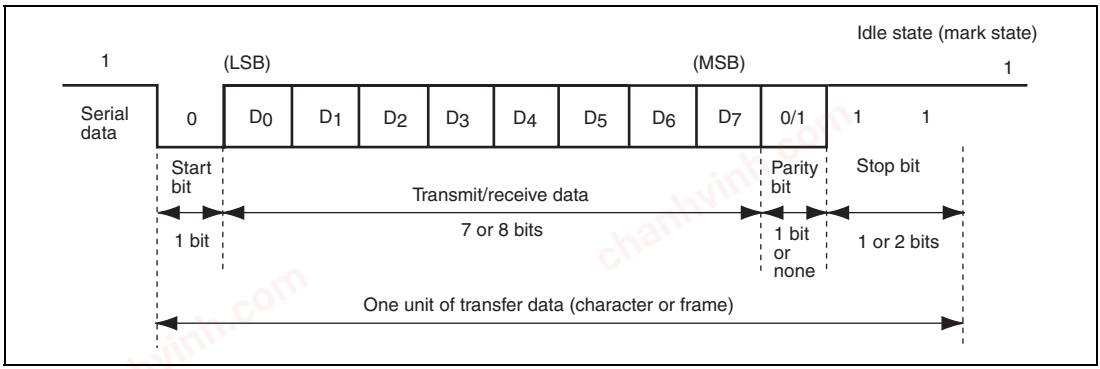

Figure 16.2 Example of Data Format in Asynchronous Communication (8-Bit Data with Parity and Two Stop Bits)

chanhvinh.com

(1) Transmit/Receive Formats

Table 16.11 lists the eight communication formats that can be selected in asynchronous mode. The format is selected by settings in the serial mode register (SCSMR).

Table 16.11 Serial Communication Formats (Asynchronous Mode)

SCSMR Bits			Serial Transmit/Receive Format and Frame Length											
CHR	PE	STOP	1	2	3	4	5	6	7	8	9	10	11	12
0	0	0	START	8-bit data								STOP		
0	0	1	START	8-bit data								STOP	STOP	
0	1	0	START	8-bit data								P	STOP	
0	1	1	START	8-bit data								P	STOP	STOP
1	0	0	START	7-bit data							STOP			
1	0	1	START	7-bit data							STOP	STOP		
1	1	0	START	7-bit data							P	STOP		
1	1	1	START	7-bit data							P	STOP	STOP	

[Legend]
START: Start bit
STOP: Stop bit
P: Parity bit

chanhvinh.com

(2) Clock

An internal clock generated by the on-chip baud rate generator or an external clock input from the SCK pin can be selected as the transmit/receive clock. The clock source is selected by the C/$\overline{A}$ bit in the serial mode register (SCSMR) and the CKE1 and CKE0 bits in the serial control register (SCSCR). For clock source selection, refer to table 16.10, SCSMR and SCSCR Settings and Clock Source Selection.

When an external clock is input at the SCK pin, it must have a frequency equal to 16 or 8 times the desired bit rate.

When this module operates on an internal clock, it can output a clock signal on the SCK pin. The frequency of this output clock is 16 or 8 times the desired bit rate.

(3) Transmitting and Receiving Data

- Initialization (Asynchronous Mode)

  Before transmitting or receiving, clear the TE and RE bits to 0 in the serial control register (SCSCR), then initialize this module as follows.

  When changing the operation mode or the communication format, always clear the TE and RE bits to 0 before following the procedure given below. Clearing TE to 0 initializes the transmit shift register (SCTSR). Clearing TE and RE to 0, however, does not initialize the serial status register (SCFSR), transmit FIFO data register (SCFTDR), or receive FIFO data register (SCFRDR), which retain their previous contents. Clear TE to 0 after all transmit data has been transmitted and the TEND flag in the SCFSR is set. The TE bit can be cleared to 0 during transmission, but the transmit data goes to the Mark state after the bit is cleared to 0. Set the TFRST bit in SCFCR to 1 and reset SCFTDR before TE is set again to start transmission.

  When an external clock is used, the clock should not be stopped during initialization or subsequent operation. The operation becomes unreliable if the clock is stopped.

chanhvinh.com

Figure 16.3 shows a sample flowchart for initialization.

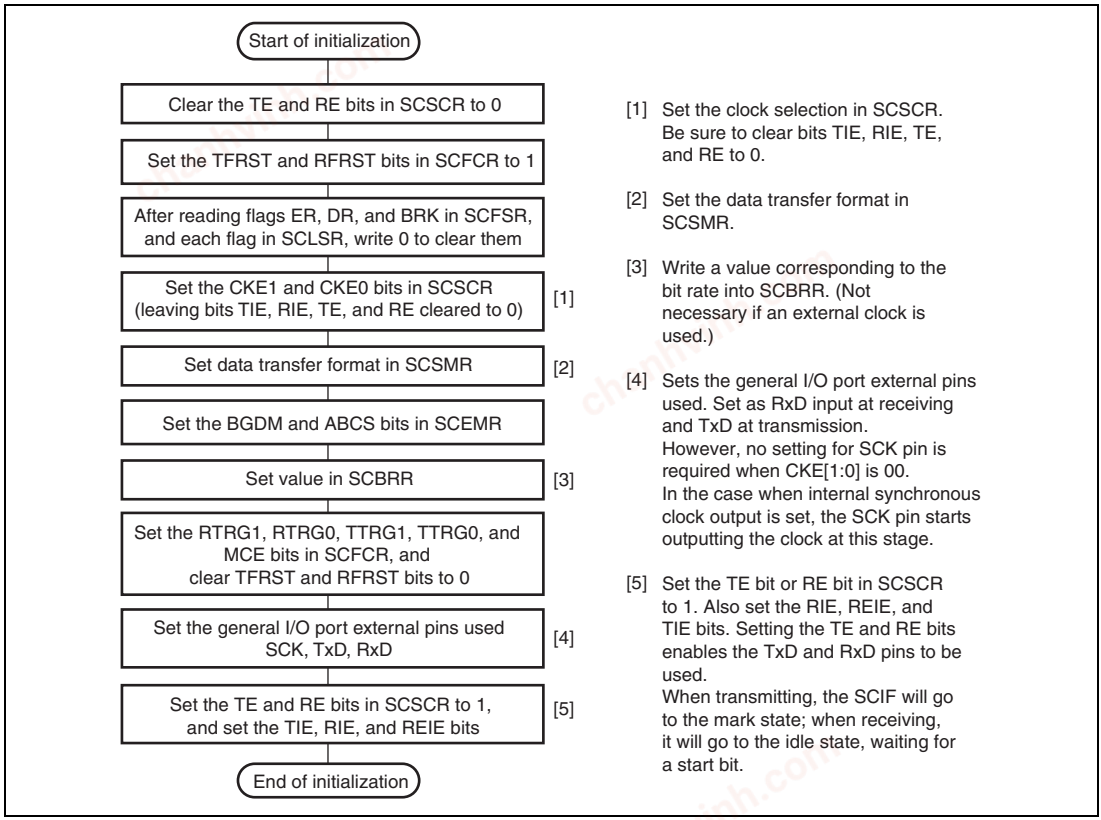

Figure 16.3 Sample Flowchart for Initialization

chanhvinh.com

- Transmitting Serial Data (Asynchronous Mode)

  Figure 16.4 shows a sample flowchart for serial transmission.

  Use the following procedure for serial data transmission after enabling transmission.

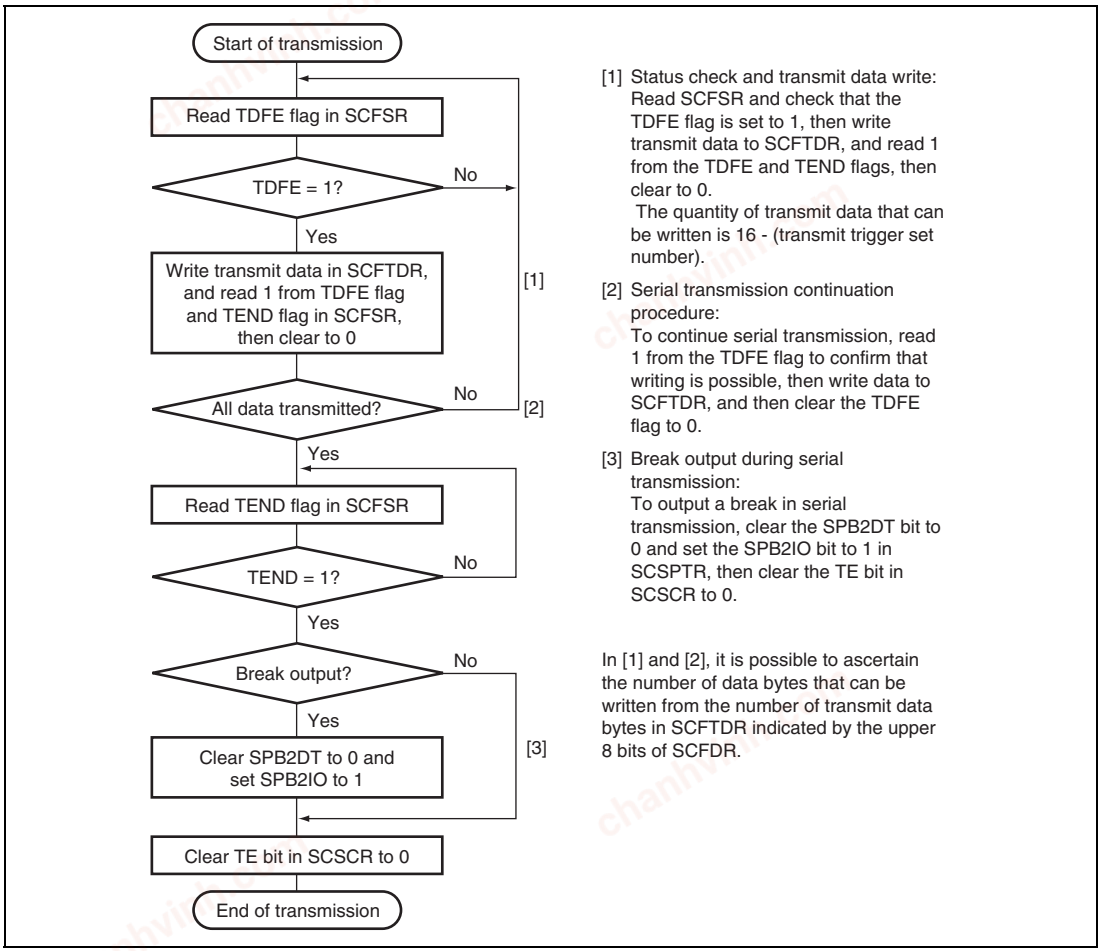

Figure 16.4 Sample Flowchart for Transmitting Serial Data

chanhvinh.com

In serial transmission, this module operates as described below.

1. When data is written into the transmit FIFO data register (SCFTDR), the data is transferred from SCFTDR to the transmit shift register (SCTSR). Confirm that the TDFE flag in the serial status register (SCFSR) is set to 1 before writing transmit data to SCFTDR. The number of data bytes that can be written is (16 – transmit trigger setting).
2. When data is transferred from SCFTDR to SCTSR and transmission is started, consecutive transmit operations are performed until there is no transmit data left in SCFTDR. When the number of transmit data bytes in SCFTDR falls below the transmit trigger number set in the FIFO control register (SCFCR), the TDFE flag is set. If the TIE bit in the serial control register (SCSR) is set to 1 at this time, a transmit-FIFO-data-empty interrupt (TXI) request is generated.

   The serial transmit data is sent from the TxD pin in the following order.

   A. Start bit: One-bit 0 is output.
   B. Transmit data: 8-bit or 7-bit data is output in LSB-first order.
   C. Parity bit: One parity bit (even or odd parity) is output. (A format in which a parity bit is not output can also be selected.)
   D. Stop bit(s): One or two 1 bits (stop bits) are output.
   E. Mark state: 1 is output continuously until the start bit that starts the next transmission is sent.
3. The SCFTDR transmit data is checked at the timing for sending the stop bit. If data is present, the data is transferred from SCFTDR to SCTSR, the stop bit is sent, and then serial transmission of the next frame is started.

chanhvinh.com

Figure 16.5 shows an example of the operation for transmission.

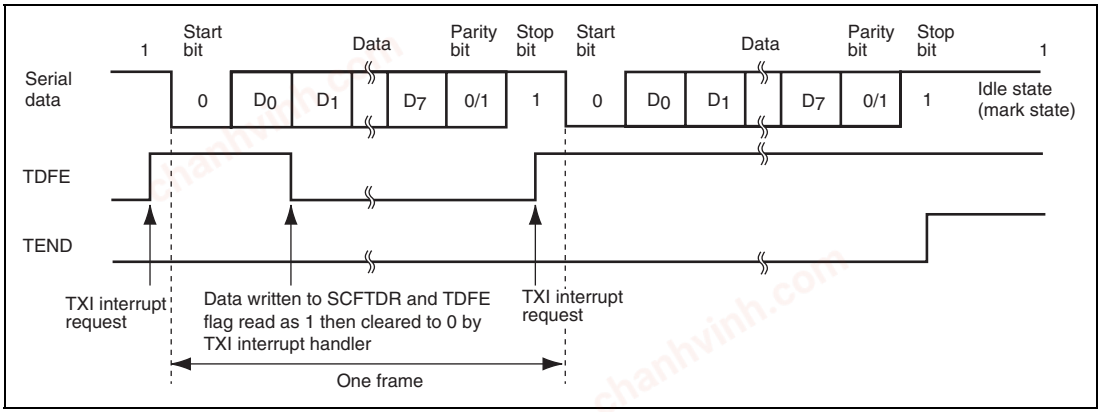

Figure 16.5 Example of Transmit Operation (8-Bit Data, Parity, 1 Stop Bit)

4. When modem control is enabled on channel 1 on the SH7268, or on channel 1, 5, or 7 on the SH7269, transmission can be stopped and restarted in accordance with the $\overline{\text{CTS}}$ input value. When $\overline{\text{CTS}}$ is set to 1, if transmission is in progress, the line goes to the mark state after transmission of one frame. When $\overline{\text{CTS}}$ is set to 0, the next transmit data is output starting from the start bit.

Figure 16.6 shows an example of the operation when modem control is used.

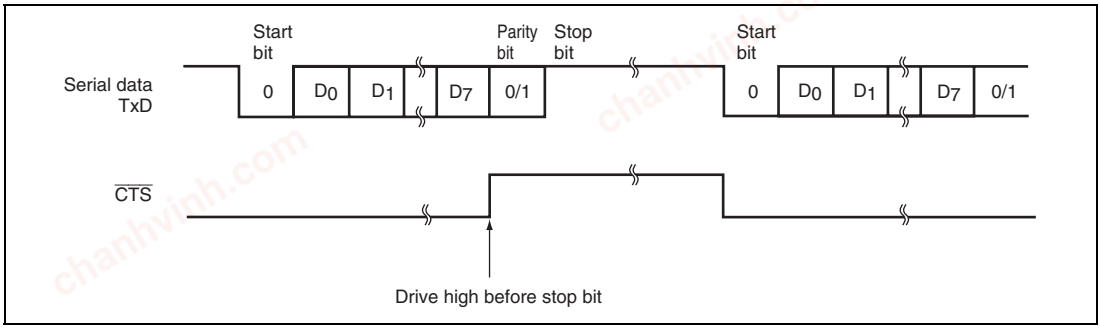

Figure 16.6 Example of Operation Using Modem Control ($\overline{\text{CTS}}$)

chanhvinh.com

- Receiving Serial Data (Asynchronous Mode)

  Figures 16.7 and 16.8 show sample flowcharts for serial reception.

  Use the following procedure for serial data reception after enabling reception.

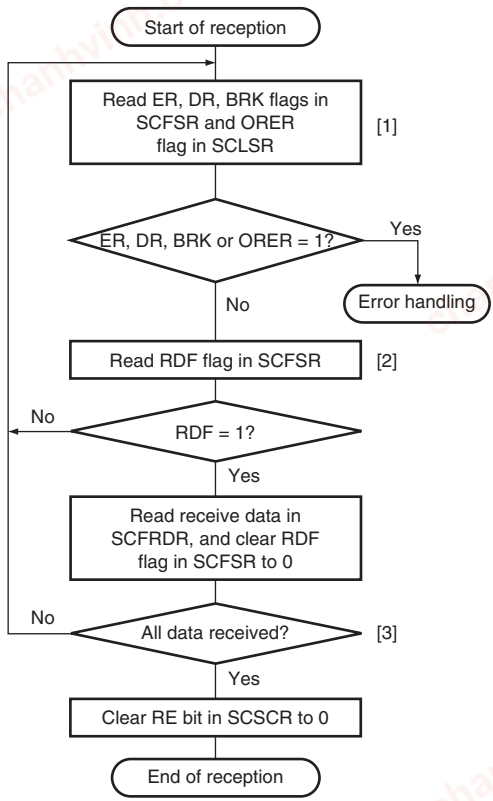

[1] Receive error handling and break detection:

Read the DR, ER, and BRK flags in SCFSR, and the ORER flag in SCLSR, to identify any error, perform the appropriate error handling, then clear the DR, ER, BRK, and ORER flags to 0. In the case of a framing error, a break can also be detected by reading the value of the RxD pin.

[2] Status check and receive data read:

Read SCFSR and check that RDF flag = 1, then read the receive data in SCFRDR, read 1 from the RDF flag, and then clear the RDF flag to 0. The transition of the RDF flag from 0 to 1 can also be identified by a receive FIFO data full interrupt (RXI).

[3] Serial reception continuation procedure:

To continue serial reception, read at least the receive trigger set number of receive data bytes from SCFRDR, read 1 from the RDF flag, then clear the RDF flag to 0. The number of receive data bytes in SCFRDR can be ascertained by reading from SCRFDR.

Figure 16.7 Sample Flowchart for Receiving Serial Data

chanhvinh.com

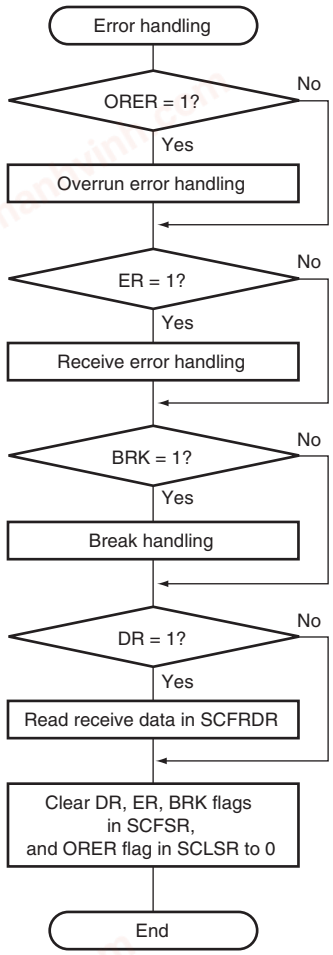

- Whether a framing error or parity error has occurred in the receive data that is to be read from the receive FIFO data register (SCFRDR) can be ascertained from the FER and PER bits in the serial status register (SCFSR).
- When a break signal is received, receive data is not transferred to SCFRDR while the BRK flag is set. However, note that the last data in SCFRDR is H'00, and the break data in which a framing error occurred is stored.

Figure 16.8 Sample Flowchart for Receiving Serial Data (cont)

chanhvinh.com

In serial reception, this module operates as described below.

1. The transmission line is monitored, and if a 0 start bit is detected, internal synchronization is performed and reception is started.
2. The received data is stored in SCRSR in LSB-to-MSB order.
3. The parity bit and stop bit are received.

   After receiving these bits, this module carries out the following checks.

   A. Stop bit check: Checks whether the stop bit is 1. If there are two stop bits, only the first is checked.

   B. Checks whether receive data can be transferred from the receive shift register (SCRSR) to SCFRDR.

   C. Overrun check: Checks that the ORER flag is 0, indicating that the overrun error has not occurred.

   D. Break check: Checks that the BRK flag is 0, indicating that the break state is not set.

   If all the above checks are passed, the receive data is stored in SCFRDR.

   Note: When a parity error or a framing error occurs, reception is not suspended.

4. If the RIE bit in SCSCR is set to 1 when the RDF or DR flag changes to 1, a receive-FIFO-data-full interrupt (RXI) request is generated. If the RIE bit or the REIE bit in SCSCR is set to 1 when the ER flag changes to 1, a receive-error interrupt (ERI) request is generated. If the RIE bit or the REIE bit in SCSCR is set to 1 when the BRK or ORER flag changes to 1, a break reception interrupt (BRI) request is generated.

chanhvinh.com

Figure 16.9 shows an example of the operation for reception.

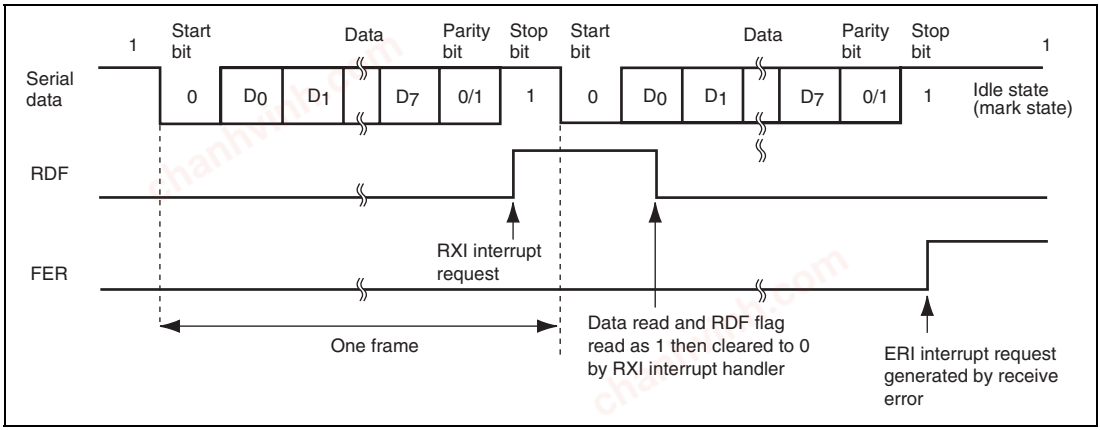

Figure 16.9 Example of Receive Operation (8-Bit Data, Parity, 1 Stop Bit)

5. When modem control is enabled on channel 1 on the SH7268, or on channel 1, 5, or 7 on the SH7269, the $\overline{\text{RTS}}$ signal is output when SCFRDR is empty. When $\overline{\text{RTS}}$ is 0, reception is possible. When $\overline{\text{RTS}}$ is 1, this indicates that SCFRDR exceeds the number set for the RTS output active trigger.

Figure 16.10 shows an example of the operation when modem control is used.

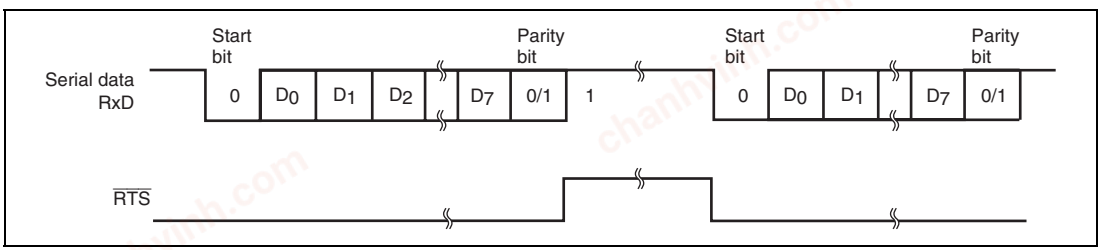

Figure 16.10 Example of Operation Using Modem Control ($\overline{\text{RTS}}$)

chanhvinh.com

16.4.3 Operation in Clock Synchronous Mode

In clock synchronous mode, data is transmitted and received in synchronization with clock pulses. This mode is suitable for high-speed serial communication.

The transmitter and receiver in this module are independent, so full-duplex communication is possible while sharing the same clock. The transmitter and receiver are also 16-byte FIFO buffered, so continuous transmitting or receiving is possible by reading or writing data while transmitting or receiving is in progress.

Figure 16.11 shows the general format in clock synchronous serial communication.

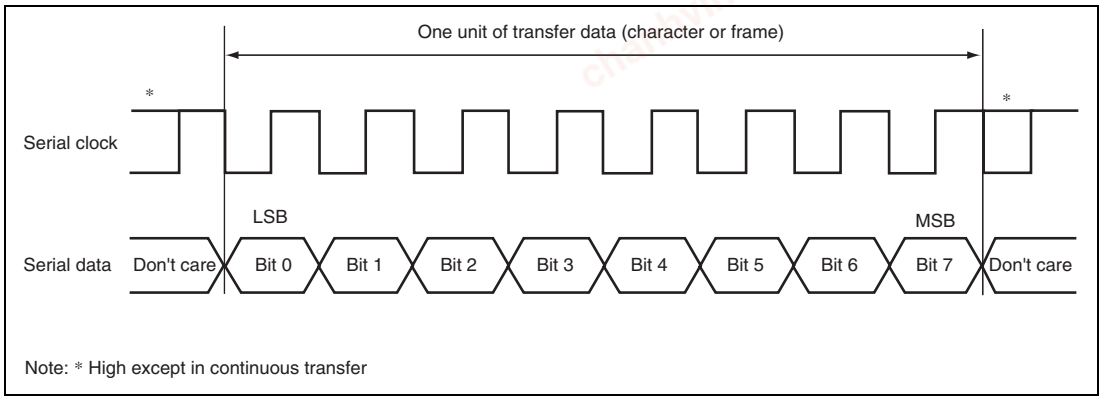

Figure 16.11 Data Format in Clock Synchronous Communication

In clock synchronous serial communication, each data bit is output on the communication line from one falling edge of the serial clock to the next. Data is guaranteed valid at the rising edge of the serial clock.

In each character, the serial data bits are transmitted in order from the LSB (first) to the MSB (last). After output of the MSB, the communication line remains in the state of the MSB.

In clock synchronous mode, data is received in synchronization with the rising edge of the serial clock.

chanhvinh.com

(1) Transmit/Receive Formats

The data length is fixed at eight bits. No parity bit can be added.

(2) Clock

An internal clock generated by the on-chip baud rate generator by the setting of the C/$\overline{A}$ bit in SCSMR and CKE[1:0] in SCSCR, or an external clock input from the SCK pin can be selected as the transmit/receive clock.

When this module operates on an internal clock, it outputs the clock signal at the SCK pin. Eight clock pulses are output per transmitted or received character. When transmission or reception is not performed, the clock signal remains in the high state. When only receiving, the clock signal outputs while the RE bit of SCSCR is 1 and the number of data in receive FIFO is more than the receive FIFO data trigger number.

(3) Transmitting and Receiving Data

- Initialization (Clock Synchronous Mode)

  Before transmitting, receiving, or changing the mode or communication format, the software must clear the TE and RE bits to 0 in the serial control register (SCSCR), then initialize this module. Clearing TE to 0 initializes the transmit shift register (SCTSR). Clearing RE to 0, however, does not initialize the RDF, PER, FER, and ORER flags and receive data register (SCRDR), which retain their previous contents.

chanhvinh.com

Figure 16.12 shows a sample flowchart for initialization.

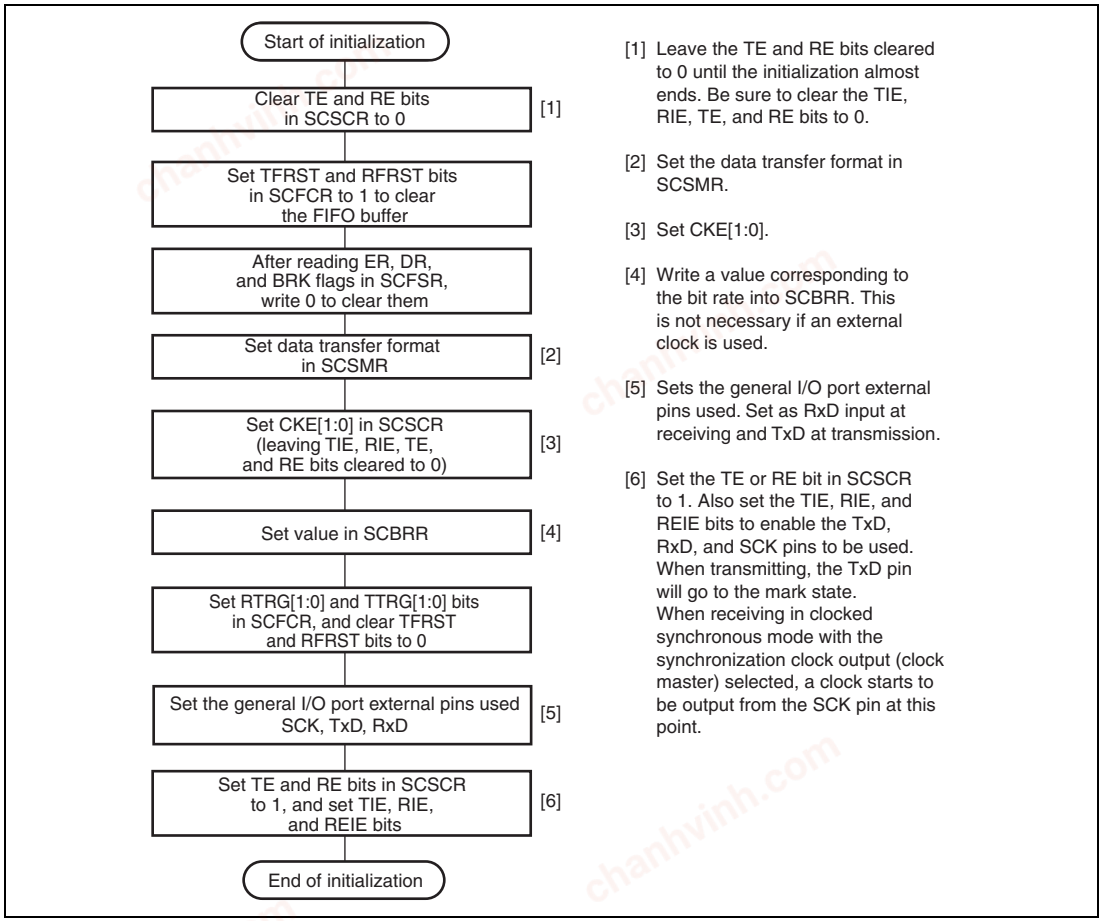

Figure 16.12 Sample Flowchart for Initialization

chanhvinh.com

- Transmitting Serial Data (Clock Synchronous Mode)

  Figure 16.13 shows a sample flowchart for transmitting serial data.

  Use the following procedure for serial data transmission after enabling transmit operation.

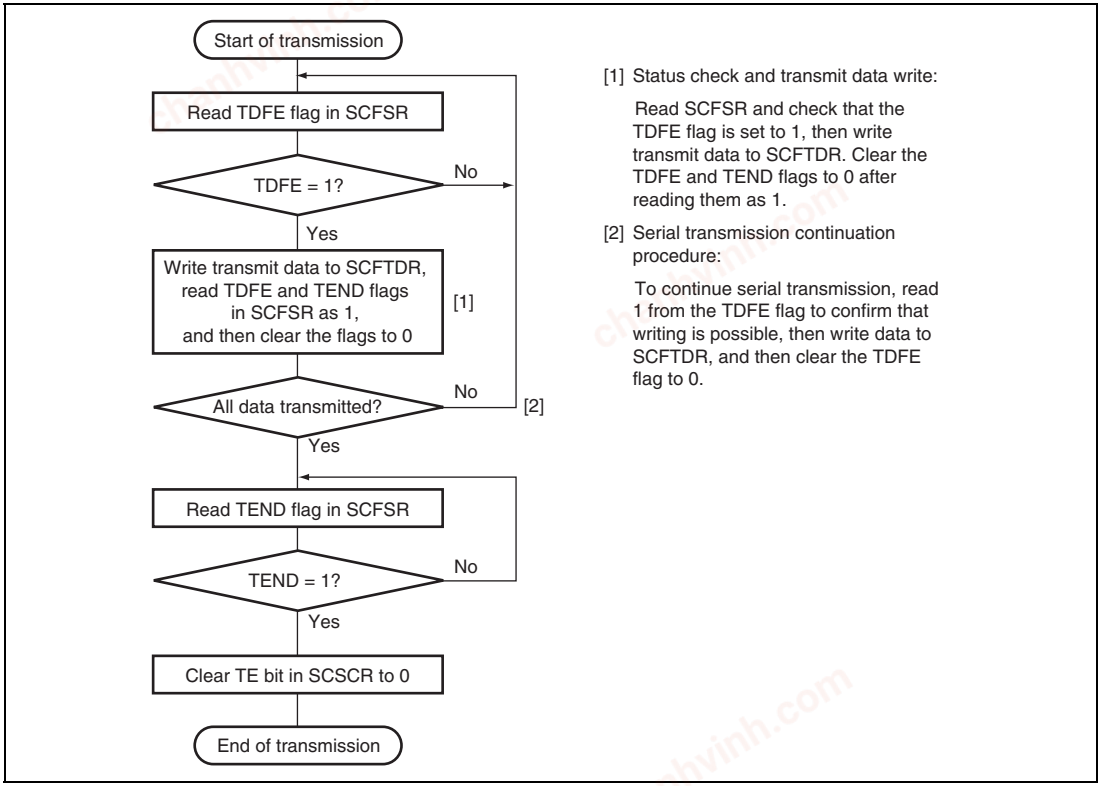

Figure 16.13 Sample Flowchart for Transmitting Serial Data

chanhvinh.com

In serial transmission, this module operates as described below.

1. When data is written into the transmit FIFO data register (SCFTDR), the data is transferred from SCFTDR to the transmit shift register (SCTSR). Confirm that the TDFE flag in the serial status register (SCFSR) is set to 1 before writing transmit data to SCFTDR. The number of data bytes that can be written is (16 – transmit trigger setting).
2. When data is transferred from SCFTDR to SCTSR and transmission is started, consecutive transmit operations are performed until there is no transmit data left in SCFTDR. When the number of transmit data bytes in SCFTDR falls below the transmit trigger number set in the FIFO control register (SCFCR), the TDFE flag is set. If the TIE bit in the serial control register (SCSR) is set to 1 at this time, a transmit-FIFO-data-empty interrupt (TXI) request is generated.

   If clock output mode is selected, eight synchronous clock pulses are output. If an external clock source is selected, data is output in synchronization with the input clock. Data is output from the TxD pin in order from the LSB (bit 0) to the MSB (bit 7).
3. The SCFTDR transmit data is checked at the timing for sending the MSB (bit 7). If data is present, the data is transferred from SCFTDR to SCTSR, and then serial transmission of the next frame is started. If there is no data, the TxD pin holds the state after the TEND flag in SCFSR is set to 1 and the MSB (bit 7) is sent.
4. After the end of serial transmission, the SCK pin is held in the high state.

Figure 16.14 shows an example of transmit operation.

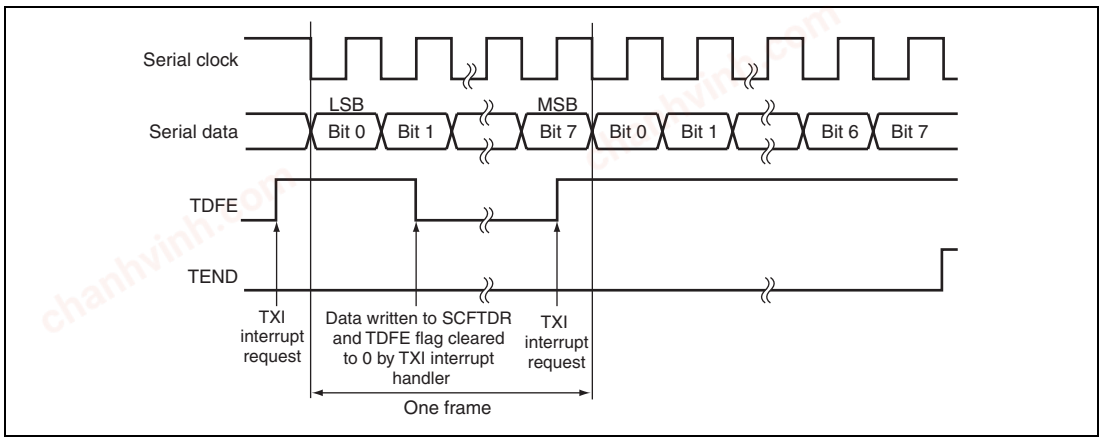

Figure 16.14 Example of Transmit Operation

chanhvinh.com

- Receiving Serial Data (Clock Synchronous Mode)

  Figures 16.15 and 16.16 show sample flowcharts for receiving serial data. Use the following procedure for serial data reception after enabling receive operation. When switching from asynchronous mode to clock synchronous mode without initialization, make sure that ORER, PER, and FER are cleared to 0.

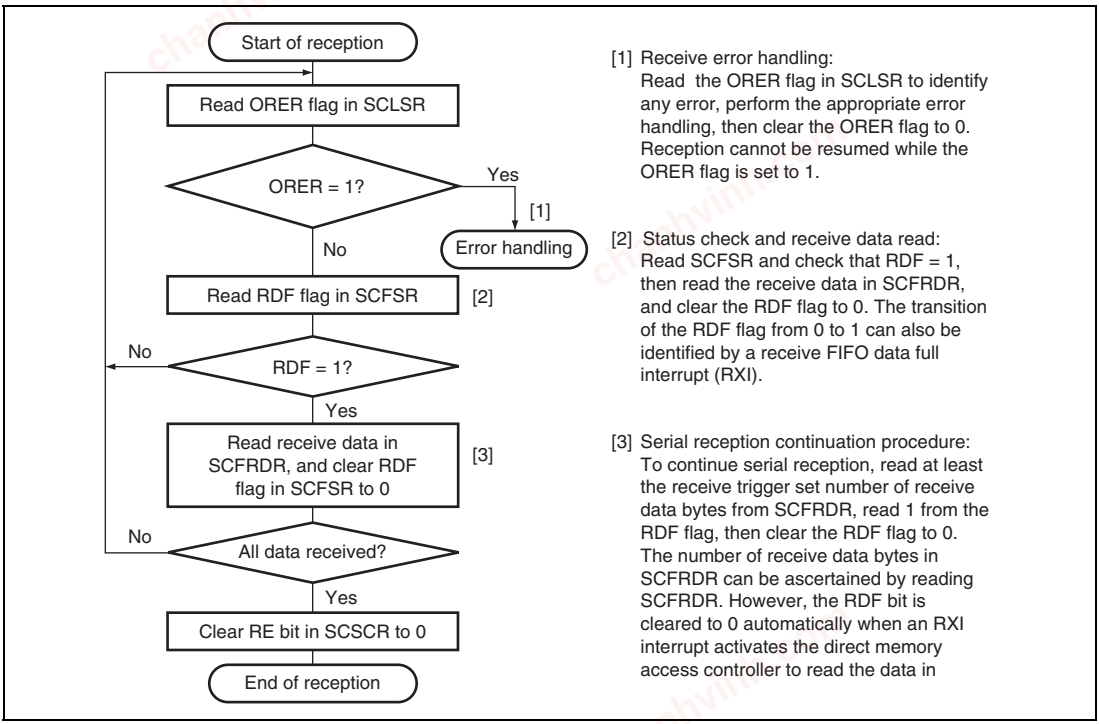

Figure 16.15 Sample Flowchart for Receiving Serial Data (1)

chanhvinh.com

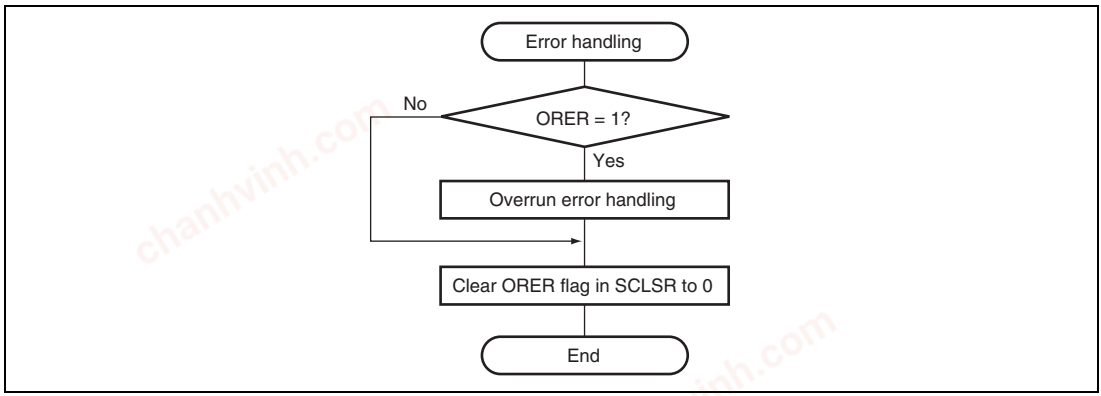

Figure 16.16 Sample Flowchart for Receiving Serial Data (2)

In serial reception, this module operates as described below.

1. Reception is started in synchronization with serial clock input or output.
2. Receive data is shifted into SCRSR in order from the LSB to the MSB. After the data reception, whether the receive data can be loaded from SCRSR into SCFRDR or not is checked. If this check is passed, the RDF flag is set to 1 and the received data is stored in SCFRDR. If the check is not passed (overrun error is detected), further reception is prevented.
3. After setting RDF to 1, if the receive FIFO data full interrupt enable bit (RIE) is set to 1 in SCSCR, a receive-data-full interrupt (RXI) request is generated. If the ORER bit is set to 1 and the receive-data-full interrupt enable bit (RIE) or the receive error interrupt enable bit (REIE) in SCSCR is also set to 1, a break interrupt (BRI) request is generated.

chanhvinh.com

Figure 16.17 shows an example of receive operation.

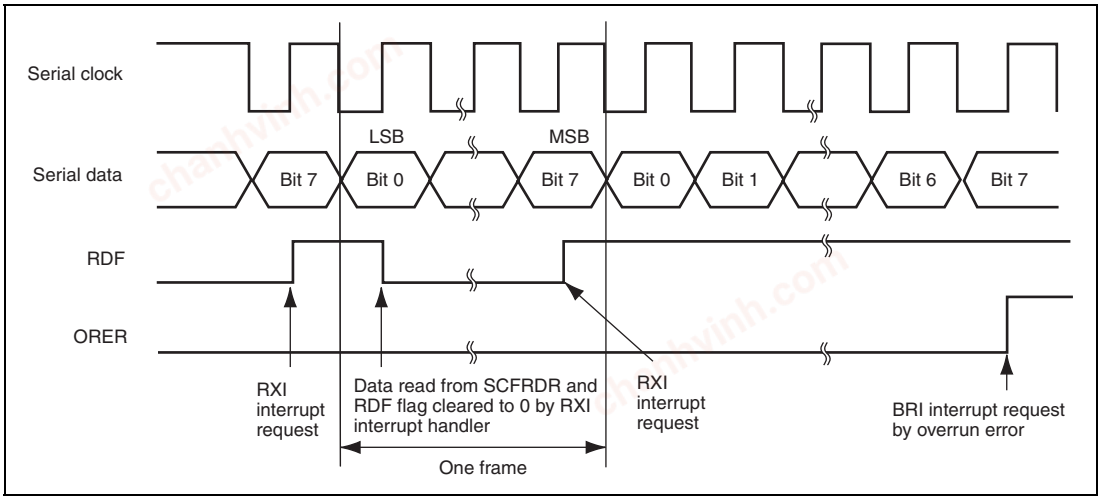

Figure 16.17 Example of Receive Operation

chanhvinh.com

- Transmitting and Receiving Serial Data Simultaneously (Clock Synchronous Mode)

  Figure 16.18 shows a sample flowchart for transmitting and receiving serial data simultaneously.

  Use the following procedure for the simultaneous transmission/reception of serial data, after enabling transmit/receive operation.

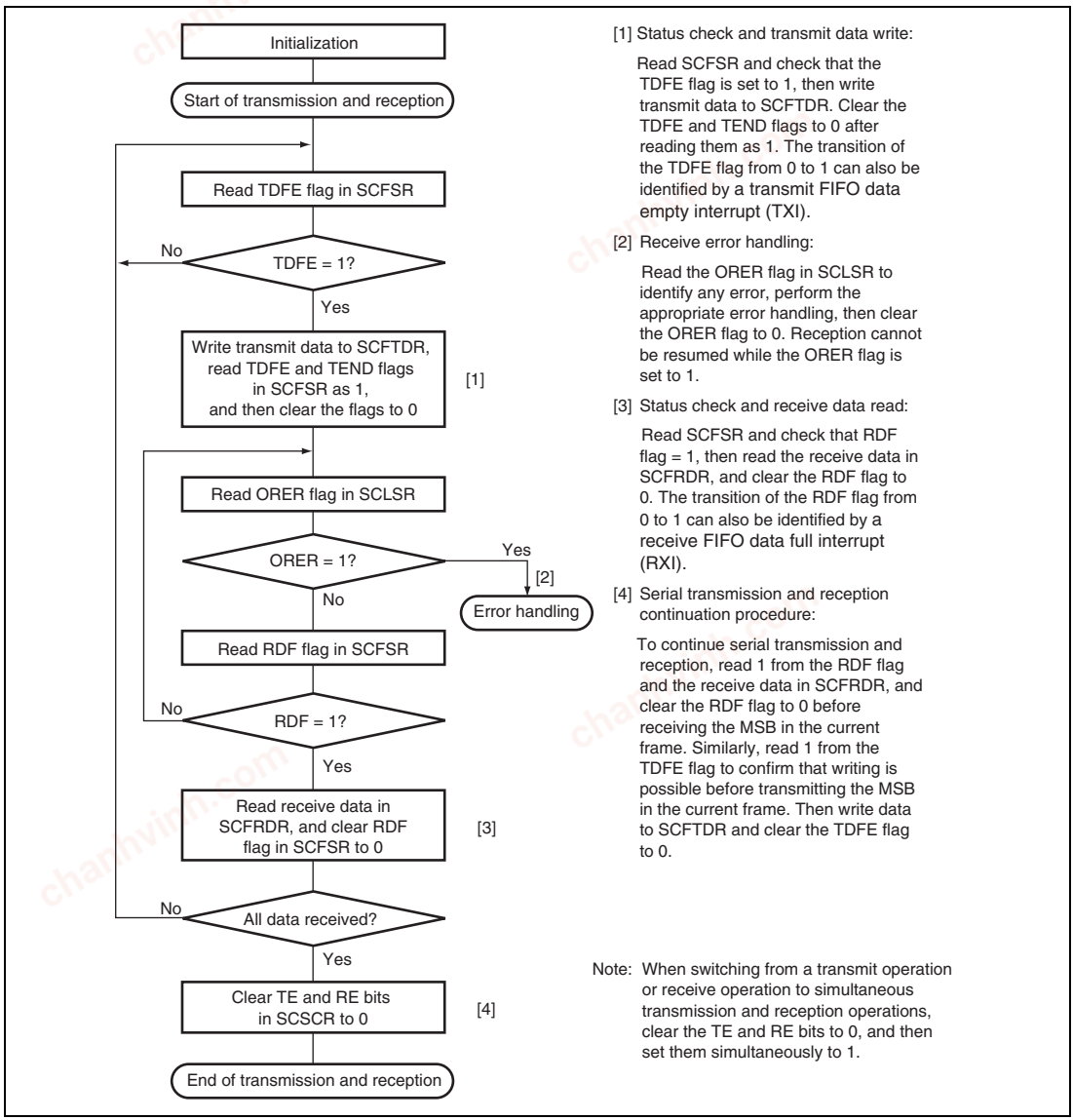

Figure 16.18 Sample Flowchart for Transmitting/Receiving Serial Data

chanhvinh.com

16.5 Interrupts

This module has four interrupt sources: transmit-FIFO-data-empty (TXI), receive-error (ERI), receive FIFO data full (RXI), and break (BRI).

Table 16.12 shows the interrupt sources and their order of priority. The interrupt sources are enabled or disabled by means of the TIE, RIE, and REIE bits in SCSCR. A separate interrupt request is sent to the interrupt controller for each of these interrupt sources.

When a TXI request is enabled by the TIE bit and the TDFE flag in the serial status register (SCFSR) is set to 1, a TXI interrupt request is generated. The direct memory access controller can be activated and data transfer performed by this TXI interrupt request. At this time, an interrupt request is not sent to the CPU.

When an RXI request is enabled by the RIE bit and the RDF flag or the DR flag in SCFSR is set to 1, an RXI interrupt request is generated. The direct memory access controller can be activated and data transfer performed by this RXI interrupt request. At this time, an interrupt request is not sent to the CPU. The RXI interrupt request caused by the DR flag is generated only in asynchronous mode.

When the RIE bit is set to 0 and the REIE bit is set to 1, this module requests only an ERI or a BRI interrupt without requesting an RXI interrupt.

The TXI indicates that transmit data can be written, and the RXI indicates that there is receive data in SCFRDR.

Table 16.12 Interrupt Sources

Interrupt Source	Description	Direct Memory Access Controller Activation	Priority on Reset Release
BRI	Interrupt initiated by break (BRK) or overrun error (ORER)	Not possible	High
ERI	Interrupt initiated by receive error (ER)	Not possible	
RXI	Interrupt initiated by receive FIFO data full (RDF) or data ready (DR)	Possible	
TXI	Interrupt initiated by transmit FIFO data empty (TDFE)	Possible	Low

chanhvinh.com

16.6 Usage Notes

Note the following when using this module.

16.6.1 SCFTDR Writing and TDFE Flag

The TDFE flag in the serial status register (SCFSR) is set when the number of transmit data bytes written in the transmit FIFO data register (SCFTDR) has fallen below the transmit trigger number set by bits TTRG[1:0] in the FIFO control register (SCFCR). After the TDFE flag is set, transmit data up to the number of empty bytes in SCFTDR can be written, allowing efficient continuous transmission.

However, if the number of data bytes written in SCFTDR is equal to or less than the transmit trigger number, the TDFE flag will be set to 1 again after being read as 1 and cleared to 0. TDFE flag clearing should therefore be carried out when SCFTDR contains more than the transmit trigger number of transmit data bytes.

The number of transmit data bytes in SCFTDR can be found from the upper 8 bits of the FIFO data count register (SCFDR).

16.6.2 SCFRDR Reading and RDF Flag

The RDF flag in the serial status register (SCFSR) is set when the number of receive data bytes in the receive FIFO data register (SCFRDR) has become equal to or greater than the receive trigger number set by bits RTRG[1:0] in the FIFO control register (SCFCR). After RDF flag is set, receive data equivalent to the trigger number can be read from SCFRDR, allowing efficient continuous reception.

However, if the number of data bytes in SCFRDR exceeds the trigger number, the RDF flag will be set to 1 again if it is cleared to 0. The RDF flag should therefore be cleared to 0 after being read as 1 after reading the number of the received data in the receive FIFO data register (SCFRDR) which is less than the trigger number.

The number of receive data bytes in SCFRDR can be found from the lower 8 bits of the FIFO data count register (SCFDR).

chanhvinh.com

16.6.3 Restriction on Direct Memory Controller Usage

When the direct memory access controller writes data to SCFTDR due to a TXI interrupt request, the state of the TEND flag becomes undefined. Therefore, the TEND flag should not be used as the transfer end flag in such a case.

16.6.4 Break Detection and Processing

Break signals can be detected by reading the RxD pin directly when a framing error (FER) is detected. In the break state the input from the RxD pin consists of all 0s, so the FER flag is set and the parity error flag (PER) may also be set.

Note that, although transfer of receive data to SCFRDR is halted in the break state, the receive operation is continued.

16.6.5 Sending a Break Signal

The I/O condition and level of the TxD pin are determined by the SPB2IO and SPB2DT bits in the serial port register (SCSPTR). This feature can be used to send a break signal.

Until TE bit is set to 1 (enabling transmission) after initializing, the TxD pin does not work. During the period, mark status is performed by the SPB2DT bit. Therefore, the SPB2IO and SPB2DT bits should be set to 1 (high level output).

To send a break signal during serial transmission, clear the SPB2DT bit to 0 (designating low level), then clear the TE bit to 0 (halting transmission). When the TE bit is cleared to 0, the transmitter is initialized regardless of the current transmission state, and 0 is output from the TxD pin.

16.6.6 Receive Data Sampling Timing and Receive Margin (Asynchronous Mode)

This module operates on a base clock with a frequency 16 or 8 times the bit rate. In reception, the falling edge of the start bit is sampled at the base clock to perform synchronization internally. Receive data is latched at the rising edge of the eighth or fourth base clock pulse. When this module operates on a base clock with a frequency 16 times the bit rate, the receive data is sampled at the timing shown in figure 16.19.

chanhvinh.com

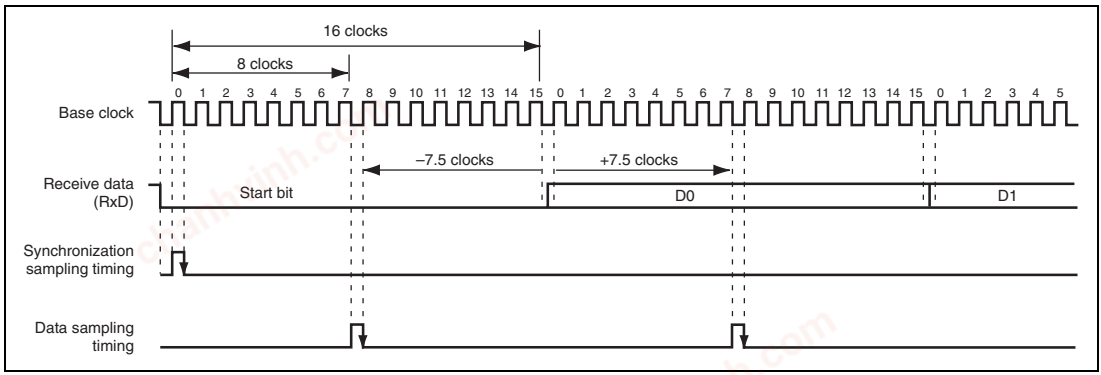

Figure 16.19 Receive Data Sampling Timing in Asynchronous Mode (Operation on a Base Clock with a Frequency 16 Times the Bit Rate)

The receive margin in asynchronous mode can therefore be expressed as shown in equation 1.

Equation 1:

$$M = \left| (0.5 - \frac{1}{2N}) - (L - 0.5)\,F - \frac{|D - 0.5|}{N}(1 + F) \right| \times 100\ \%$$

Where: M: Receive margin (%)
N: Ratio of clock frequency to bit rate (N = 16 or 8)
D: Clock duty (D = 0 to 1.0)
L: Frame length (L = 9 to 12)
F: Absolute deviation of clock frequency

From equation 1, if F = 0, D = 0.5 and N = 16, the receive margin is 46.875%, as given by equation 2.

Equation 2:

When D = 0.5 and F = 0:

$M = (0.5 - 1/(2 \times 16)) \times 100\%$

$= 46.875\%$

This is a theoretical value. A reasonable margin to allow in system designs is 20% to 30%.

chanhvinh.com

16.6.7 Selection of Base Clock in Asynchronous Mode

In this LSI, when asynchronous mode is selected, the base clock frequency within a bit period can be set to the frequency 16 or 8 times the bit rate by setting the ABCS bit in SCEMR.

Note that, however, if the base clock frequency 8 times the bit rate is used, receive margin is decreased as calculated using equation 1 in section 16.6.6, Receive Data Sampling Timing and Receive Margin (Asynchronous Mode).

If the desired bit rate can be set simply by setting SCBRR and the CKS1and CKS0 bits in SCSMR, it is recommended to use the base clock frequency within a bit period 16 times the bit rate (by setting the ABCS bit in SCEMR to 0). If an internal clock is selected as a clock source and the SCK pin is not used, the bit rate can be increased without decreasing receive margin by selecting double-speed mode for the baud rate generator (setting the BGDM bit in SCEMR to 1).

chanhvinh.com

Section 17 Renesas Serial Peripheral Interface

This LSI includes two-channel Renesas serial peripheral interfaces.

This module is capable of full-duplex serial communication.

17.1 Features

This module has the following features.

- SPI transfer functions
  Use of MOSI (master out/slave in), MISO (master in/slave out), SSL (slave select), and RSPCK (SPI clock) signals allow for serial communications through SPI operation (four-wire method).
  Capable of serial communications in master/slave mode
  Supports mode fault error detection (only in SPI slave mode)
  Supports overrun error detection (only in SPI slave mode)
  Switching of the polarity of the serial transfer clock
  Switching of the clock phase of serial transfer
- Data format
  MSB-first/LSB-first selectable
  Transfer bit-length is selectable as 8, 16, or 32 bits.
- Bit rate
  RSPCK can be divided by a maximum of 4096 in master mode
  RSPCK can be generated by dividing P1ϕ by the on-chip baud rate generator.
  An externally input clock can be used as a serial clock.
- Buffer configuration
  8 bytes for transmission and 32 bytes for reception.

chanhvinh.com

- SSL control function
  One SSL signal for each channel
  In master mode, outputs SSL signal.
  In slave mode, inputs SSL signal.
  Controllable delay from SSL output assertion to RSPCK operation (RSPCK delay)
  Range: 1 to 8 RSPCK cycles (set in RSPCK-cycle units)
  Controllable delay from RSPCK stoppage to SSL output negation (SSL negation delay)
  Range: 1 to 8 RSPCK cycles (set in RSPCK-cycle units)
  Controllable wait for next-access SSL output assertion (next-access delay)
  Range: 1 to 8 RSPCK cycles (set in RSPCK-cycle units)
  Function for changing SSL polarity
- Control in master transfer
  A transfer of up to four commands can be executed sequentially in looped execution.
  For each command, the following can be set:
  SSL signal value, bit rate, RSPCK polarity/phase, transfer data length, LSB/MSB first, burst, RSPCK delay, SSL negation delay, and next-access delay.
  A transfer can be initiated by writing to the transmit buffer.
  A transfer can be initiated by clearing the SPTEF bit.
  MOSI signal value specifiable in SSL negation
- Interrupt sources
  Maskable interrupt sources:
  Receive interrupt (receive buffer full)
  Transmit interrupt (transmit buffer empty)
  Error interrupt (mode fault, overrun)
- Others
  Provides loop back mode
  Provides a function for disabling (initializing) this module

chanhvinh.com

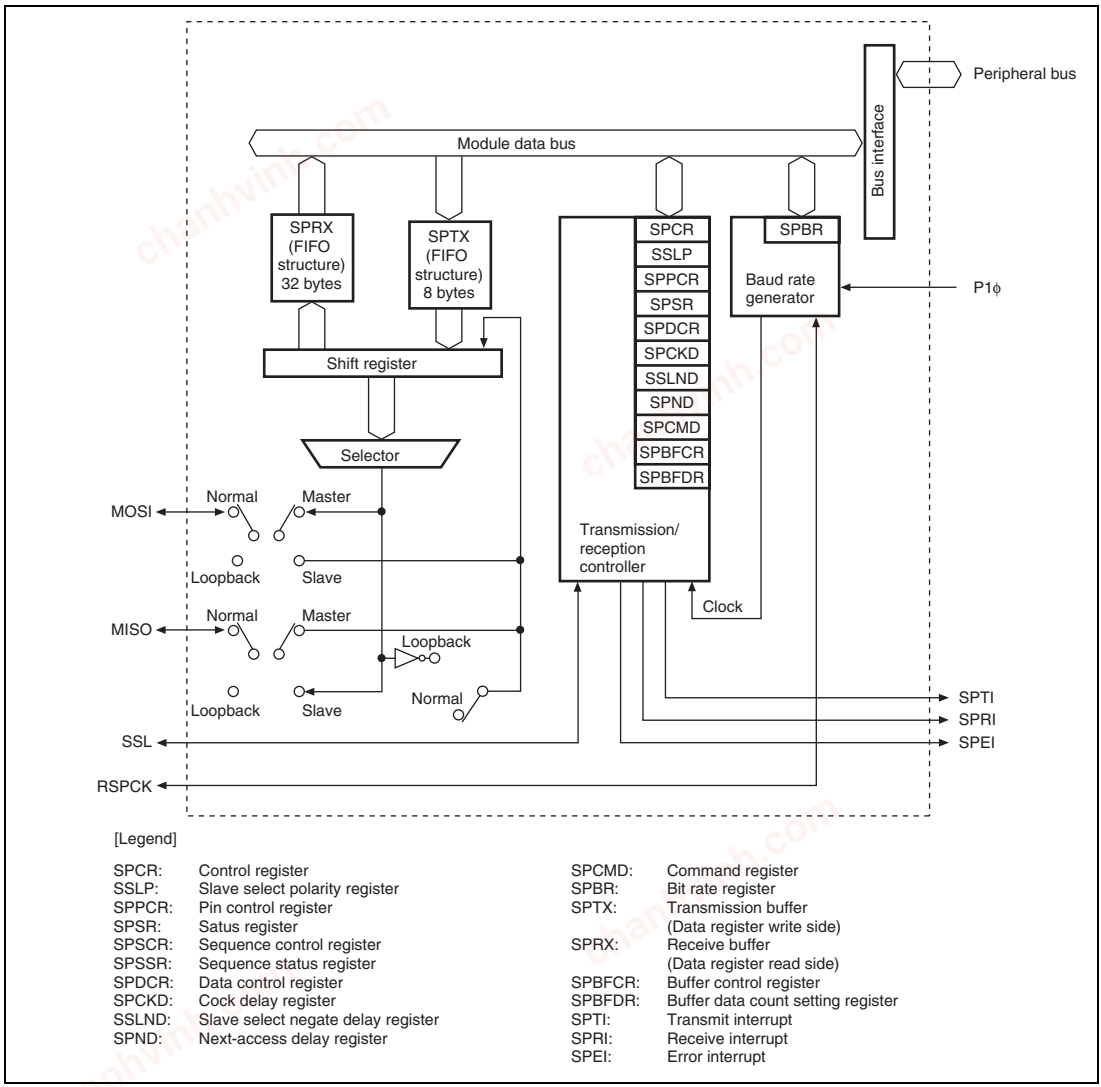

[Legend]

SPCR:	Control register	SPCMD:	Command register
SSLP:	Slave select polarity register	SPBR:	Bit rate register
SPPCR:	Pin control register	SPTX:	Transmission buffer (Data register write side)
SPSR:	Satus register	SPRX:	Receive buffer (Data register read side)
SPSCR:	Sequence control register	SPBFCR:	Buffer control register
SPSSR:	Sequence status register	SPBFDR:	Buffer data count setting register
SPDCR:	Data control register	SPTI:	Transmit interrupt
SPCKD:	Cock delay register	SPRI:	Receive interrupt
SSLND:	Slave select negate delay register	SPEI:	Error interrupt
SPND:	Next-access delay register		

Figure 17.1 Block Diagram (for One Channel)

chanhvinh.com

17.2 Input/Output Pins

Table 17.1 shows the pin configuration. This module automatically switches the input/output direction of the SSL pin. SSL is set as an output in master mode and as an input in slave mode. Pins RSPCK, MOSI, and MISO are automatically set as inputs or outputs according to the setting of master or slave and the level input on SSL (see section 17.4.2, Pin Control).

Table 17.1 Pin Configuration

Channel	Pin Name	Pin Name	I/O	Function
0	Clock pin	RSPCK0	I/O	Clock input/output
	Master transmit data pin	MOSI0	I/O	Master transmit data
	Slave transmit data pin	MISO0	I/O	Slave transmit data
	Slave select 0 pin	SSL00	I/O	Slave selection
1	Clock pin	RSPCK1	I/O	Clock input/output
	Master transmit data pin	MOSI1	I/O	Master transmit data
	Slave transmit data pin	MISO1	I/O	Slave transmit data
	Slave select 0 pin	SSL10	I/O	Slave selection

Note: In the description of the pins, the channel is omitted and pin names are described as RSPICK, MOSI, MISO, and SSL.

chanhvinh.com

17.3 Register Descriptions

Table 17.2 shows the register configuration. These registers enable this module to perform the following controls: specifying master/slave modes, specifying a transfer format, and controlling the transmitter and receiver.

Table 17.2 Register Configuration

Channel	Register Name	Abbreviation*1	R/W	Initial Value	Address	Access Size
0	Control register_0	SPCR_0	R/W	H'00	H'E800E000	8, 16
	Slave select polarity register_0	SSLP_0	R/W	H'00	H'E800E001	8, 16
	Pin control register_0	SPPCR_0	R/W	H'00	H'E800E002	8, 16
	Status register_0	SPSR_0	R/(W)*2	H'60	H'E800E003	8, 16
	Data register_0	SPDR_0	R/W	Undefined	H'E800E004	8, 16, 32
	Sequence control register_0	SPSCR_0	R/W	H'00	H'E800E008	8, 16
	Sequence status register_0	SPSSR_0	R	H'00	H'E800E009	8, 16
	Bit rate register_0	SPBR_0	R/W	H'FF	H'E800E00A	8, 16
	Data control register_0	SPDCR_0	R/W	H'20	H'E800E00B	8, 16
	Clock delay register_0	SPCKD_0	R/W	H'00	H'E800E00C	8, 16
	Slave select negation delay register_0	SSLND_0	R/W	H'00	H'E800E00D	8, 16
	Next-access delay register_0	SPND_0	R/W	H'00	H'E800E00E	8
	Command register_00	SPCMD_00	R/W	H'070D	H'E800E010	16
	Command register_01	SPCMD_01	R/W	H'070D	H'E800E012	16
	Command register_02	SPCMD_02	R/W	H'070D	H'E800E014	16
	Command register_03	SPCMD_03	R/W	H'070D	H'E800E016	16
	Buffer control register_0	SPBFCR_0	R/W	H'00	H'E800E020	8, 16
	Buffer data count setting register_0	SPBFDR_0	R	H'0000	H'E800E022	16

chanhvinh.com

Channel	Register Name	Abbreviation*[1]	R/W	Initial Value	Address	Access Size
1	Control register_1	SPCR_1	R/W	H'00	H'E800E800	8, 16
	Slave select polarity register_1	SSLP_1	R/W	H'00	H'E800E801	8, 16
	Pin control register_1	SPPCR_1	R/W	H'00	H'E800E802	8, 16
	Status register_1	SPSR_1	R/(W)*[2]	H'60	H'E800E803	8, 16
	Data register_1	SPDR_1	R/W	Undefined	H'E800E804	8, 16, 32
	Sequence control register_1	SPSCR_1	R/W	H'00	H'E800E808	8, 16
	Sequence status register_1	SPSSR_1	R	H'00	H'E800E809	8, 16
	Bit rate register_1	SPBR_1	R/W	H'FF	H'E800E80A	8, 16
	Data control register_1	SPDCR_1	R/W	H'20	H'E800E80B	8, 16
	Clock delay register_1	SPCKD_1	R/W	H'00	H'E800E80C	8, 16
	Slave select negation delay register_1	SSLND_1	R/W	H'00	H'E800E80D	8, 16
	Next-access delay register_1	SPND_1	R/W	H'00	H'E800E80E	8
	Command register_10	SPCMD_10	R/W	H'070D	H'E800E810	16
	Command register_11	SPCMD_11	R/W	H'070D	H'E800E812	16
	Command register_12	SPCMD_12	R/W	H'070D	H'E800E814	16
	Command register_13	SPCMD_13	R/W	H'070D	H'E800E816	16
	Buffer control register_1	SPBFCR_1	R/W	H’00	H’E800E820	8, 16
	Buffer data count setting register_1	SPBFDR_1	R	H'0000	H'E800E822	16

Notes: 1. In the description of the register names, the channel is omitted.
2. Only 0 can be written to clear the flag.

chanhvinh.com

17.3.1 Control Register (SPCR)

SPCR sets the operating mode. If the MSTR and MODFEN bits are changed while the function of this module is enabled by setting the SPE bit to 1, subsequent operations cannot be guaranteed.

Bit:	7	6	5	4	3	2	1	0
	SPRIE	SPE	SPTIE	SPEIE	MSTR	MODFEN	—	—
Initial value:	0	0	0	0	0	0	0	0
R/W:	R/W	R/W	R/W	R/W	R/W	R/W	R	R

Bit	Bit Name	Initial Value	R/W	Description
7	SPRIE	0	R/W	Receive Interrupt Enable Enables or disables generation of receive interrupt requests (SPRI) when the number of receive data units in the receive buffer (SPRX) is equal to or greater than the specified receive buffer data triggering number and the SPRF flag in SPSR is set to 1. 0: Disables the generation of receive interrupt requests. 1: Enables the generation of receive interrupt requests.
6	SPE	0	R/W	Function Enable Setting this bit to 1 enables the module function. When the MODF bit in the status register (SPSR) is 1, the SPE bit cannot be set to 1 (see section 17.4.6, Error Detection). Setting the SPE bit to 0 disables the module function, and initializes a part of the module function (see section 17.4.7, Initialization). 0: Disables the module function 1: Enables the module function

chanhvinh.com

Bit	Bit Name	Initial Value	R/W	Description
5	SPTIE	0	R/W	Transmit Interrupt Enable Enables or disables generation of transmit interrupt requests (SPTI) when the number of transmit data units in the transmit buffer (SPTX) is equal to or less than the specified transmit buffer data triggering number and the SPTEF flag in SPSR is set to 1. 0: Disables the generation of transmit interrupt requests. 1: Enables the generation of transmit interrupt requests.
4	SPEIE	0	R/W	Error Interrupt Enable Enables or disables the generation of error interrupt requests when this module detects a mode fault error and sets the MODF bit in the status register (SPSR) to 1, or when this module detects an overrun error and sets the OVRF bit in SPSR to 1 (see section 17.4.6, Error Detection). 0: Disables the generation of error interrupt requests. 1: Enables the generation of error interrupt requests. Note: This bit is valid only in SPI slave mode.
3	MSTR	0	R/W	Master/Slave Mode Select Selects master/slave mode. According to MSTR bit settings, this module determines the direction of pins RSPCK, MOSI, MISO, and SSL pins. 0: Slave mode 1: Master mode
2	MODFEN	0	R/W	Mode Fault Error Detection Enable Enables or disables the detection of a mode fault error (see section 17.4.6, Error Detection). 0: Disables the detection of a mode fault error 1: Enables the detection of a mode fault error Note: This bit is valid only in SPI slave mode. When master mode is specified with the MSTR bit, this bit should always be cleared to 0.
1, 0	—	All 0	R	Reserved The write value should always be 0. Otherwise, operation cannot be guaranteed.

chanhvinh.com

17.3.2 Slave Select Polarity Register (SSLP)

SSLP sets the polarity of the SSL signal. If the SSL0P bit is changed while the function of this module is enabled by setting the SPE bit in the control register (SPCR) to 1, subsequent operations cannot be guaranteed.

Bit:	7	6	5	4	3	2	1	0
	—	—	—	—	—	—	—	SSL0P
Initial value:	0	0	0	0	0	0	0	0
R/W:	R	R	R	R	R	R	R	R/W

Bit	Bit Name	Initial Value	R/W	Description
7 to 1	—	All 0	R	Reserved The write value should always be 0. Otherwise, operation cannot be guaranteed.
0	SSL0P	0	R/W	SSL Signal Polarity Setting Sets the polarity of the SSL signal. The value of SSL0P indicates the active polarity of the SSL signal. 0: SSL signal 0-active 1: SSL signal 1-active

chanhvinh.com

17.3.3 Pin Control Register (SPPCR)

SPPCR sets the modes of the pins. If the contents of this register are changed while the function of this module is enabled by setting the SPE bit in the control register (SPCR) to 1, subsequent operations cannot be guaranteed.

Bit:	7	6	5	4	3	2	1	0
	—	—	MOIFE	MOIFV	—	—	—	SPLP
Initial value:	0	0	0	0	0	0	0	0
R/W:	R	R	R/W	R/W	R	R	R	R/W

Bit	Bit Name	Initial Value	R/W	Description
7, 6	—	All 0	R	Reserved The write value should always be 0. Otherwise, operation cannot be guaranteed.
5	MOIFE	0	R/W	MOSI Idle Value Fixing Enable Fixes the MOSI output value when this module in master mode is in an SSL negation period (including the SSL retention period during a burst transfer). When MOIFE is 0, this module outputs the last data from the previous serial transfer during the SSL negation period. When MOIFE is 1, this module outputs the fixed value set in the MOIFV bit to the MOSI bit. 0: MOSI output value equals final data from previous transfer 1: MOSI output value equals the value set in the MOIFV bit
4	MOIFV	0	R/W	MOSI Idle Fixed Value If the MOIFE bit is 1 in master mode, this module, according to MOIFV bit settings, determines the MOSI signal value during the SSL negation period (including the SSL retention period during a burst transfer). 0: MOSI Idle fixed value equals 0 1: MOSI Idle fixed value equals 1
3 to 1	—	All 0	R	Reserved The write value should always be 0. Otherwise, operation cannot be guaranteed.

chanhvinh.com

Bit	Bit Name	Initial Value	R/W	Description
0	SPLP	0	R/W	Loopback When the SPLP bit is set to 1, this module shuts off the path between the MISO pin and the shift register, and between the MOSI pin and the shift register, and connects (reverses) the input path and the output path for the shift register. 0: Normal mode 1: Loopback mode

chanhvinh.com

17.3.4 Status Register (SPSR)

SPSR indicates the operating status.

Bit:	7	6	5	4	3	2	1	0
	SPRF	TEND	SPTEF	—	—	MODF	—	OVRF
Initial value:	0	1	1	0	0	0	0	0
R/W:	R	R	R	R	R	R/(W)*	R	R/(W)*

Note: * Only 0 can be written to clear the flag after reading 1.

Bit	Bit Name	Initial Value	R/W	Description
7	SPRF	0	R	Receive Buffer Full Flag Indicates that the number of receive data units in the receive buffer (SPRX) is equal to or greater than the receive buffer data triggering number specified in the buffer control register (SPBFCR). 0: The number of receive data units in the receive buffer is less than the receive buffer data triggering number. 1: The number of receive data units in the receive buffer is equal to or greater than the receive buffer data triggering number. [Clearing conditions] • The receive buffer data is read until the number of data units in the receive buffer becomes less than the specified receive buffer data triggering number. • Receive buffer data reset is enabled. • Power-on reset [Setting condition] • The number of data units in the receive buffer is equal to or greater than the specified receive buffer data triggering number.

chanhvinh.com

Bit	Bit Name	Initial Value	R/W	Description
6	TEND	1	R	Transmit End This bit is set to 1 when transmission is completed, and this bit is 0 when transmission is not completed. [Clearing condition] • When transmit data are moved from the transmit register to the shift register. [Setting condition] • When the number of data units in the transmit buffer (SPTX) is zero when a serial transfer is completed.
5	SPTEF	1	R	Transmit Buffer Empty Flag Indicates that the number of transmit data units in the transmit buffer (SPTX) is equal to or less than the transmit buffer data triggering number specified in the buffer control register (SPBFCR). 0: The number of transmit data units in the transmit buffer is equal to or greater than the specified transmit buffer data triggering number. 1: The number of transmit data units in the transmit buffer is less than the specified transmit buffer data triggering number. [Clearing condition] • When data is written to the transmit buffer until the number of transmit data units in the transmit buffer exceeds the specified transmit buffer data triggering number. [Setting conditions] • When the number of transmit data units in the transmit buffer is less than the specified transmit buffer data triggering number. • When transmit buffer data reset is enabled. • Power-on reset
4, 3	—	All 0	R	Reserved The write value should always be 0. Otherwise, operation cannot be guaranteed.

chanhvinh.com

Bit	Bit Name	Initial Value	R/W	Description
2	MODF	0	R/(W)*	Mode Fault Error Flag Indicates the occurrence of a mode fault error. If the MODFEN bit is set to 1 when this module is in slave mode and the SSL pin is negated before the RSPCK cycle necessary for data transfer ends, this module detects a mode fault error. The active level of the SSL signal is determined by the SSL0P bit in the slave select polarity register (SSLP). [Clearing conditions] • SPSR is read when the MODF bit is 1, and then 0 is written to the MODF bit. • Power-on reset 0: No mode fault error occurred 1: A mode fault error occurred Note: This bit is valid only in SPI slave mode.
1	—	0	R	Reserved The write value should always be 0. Otherwise, operation cannot be guaranteed.
0	OVRF	0	R/(W)*	Overrun Error Flag Indicates the occurrence of an overrun error. If a serial transfer ends when there is not enough space for receiving the specified length of data in the receive buffer (SPRX), this module detects an overrun error, and sets the OVRF bit to 1. [Clearing conditions] • SPSR is read when the OVRF bit is 1, and then 0 is written to the OVRF bit. • Power-on reset 0: No overrun error occurred 1: An overrun error occurred Note: This bit is valid only in SPI slave mode.

Note: * Only 0 can be written to clear the flag after reading 1.

chanhvinh.com

17.3.5 Data Register (SPDR)

SPDR is a buffer that holds data for transmission and reception.

The transmit buffer (SPTX) and receive buffer (SPRX) are independent and are mapped to SPDR.

SPDR should be read or written to in byte, word, or longword units according to the access width specification bit (SPLW) in the data control register (SPDCR).

The bit length to be used is determined by the data length specification bits (SPB3 to SPB0) in the command register (SPCMD).

When data is written to SPDR, the data will be written to the transmit buffer from SPDR if the transmit buffer has a space equal to or more than the SPDR access width. If there is not enough space, data will not be written to the transmit buffer. Even if an attempt is made to write data to the buffer, the data is ignored.

When data is read from SPDR, receive data in the receive buffer will be read. If SPDR is read when there is no receive data in the receive buffer, the read value is undefined.

When SPDR is written to with the longword-, word-, or byte-access width, the transmit data should be written to the following bits. If data is written to the other bits, the data is not guaranteed.

- Longword: Bits 31 to 0
- Word: Bits 31 to 16
- Byte: Bits 31 to 24

When SPDR is read with the longword-, word-, or byte-access width, the receive data should be read from the following bits. If data is read from the other bits, the data is not guaranteed.

- Longword: Bits 31 to 0
- Word: Bits 31 to 16
- Byte: Bits 31 to 24

chanhvinh.com

Bit:	31	30	29	28	27	26	25	24	23	22	21	20	19	18	17	16
	SPD31	SPD30	SPD29	SPD28	SPD27	SPD26	SPD25	SPD24	SPD23	SPD22	SPD21	SPD20	SPD19	SPD18	SPD17	SPD16
Initial value:	Undefined	Undefined	Undefined	Undefined	Undefined	Undefined	Undefined	Undefined	Undefined	Undefined	Undefined	Undefined	Undefined	Undefined	Undefined	Undefined
R/W:	R/W	R/W	R/W	R/W	R/W	R/W	R/W	R/W	R/W	R/W	R/W	R/W	R/W	R/W	R/W	R/W

Bit:	15	14	13	12	11	10	9	8	7	6	5	4	3	2	1	0
	SPD15	SPD14	SPD13	SPD12	SPD11	SPD10	SPD9	SPD8	SPD7	SPD6	SPD5	SPD4	SPD3	SPD2	SPD1	SPD0
Initial value:	Undefined	Undefined	Undefined	Undefined	Undefined	Undefined	Undefined	Undefined	Undefined	Undefined	Undefined	Undefined	Undefined	Undefined	Undefined	Undefined
R/W:	R/W	R/W	R/W	R/W	R/W	R/W	R/W	R/W	R/W	R/W	R/W	R/W	R/W	R/W	R/W	R/W

17.3.6 Sequence Control Register (SPSCR)

SPSCR sets the sequence controlled method when this module operates in master mode. If the contents of SPSCR are changed while the MSTR and SPE bits in the control register (SPCR) are 1 with the function of this module enabled in master mode, the subsequent operation cannot be guaranteed.

Bit:	7	6	5	4	3	2	1	0
	—	—	—	—	—	—	SPSLN1	SPSLN0
Initial value:	0	0	0	0	0	0	0	0
R/W:	R	R	R	R	R	R	R/W	R/W

Bit	Bit Name	Initial Value	R/W	Description
7 to 2	—	All 0	R	Reserved The write value should always be 0. Otherwise, operation cannot be guaranteed.

chanhvinh.com

Bit	Bit Name	Initial Value	R/W	Description
1	SPSLN1	0	R/W	Sequence Length Specification
0	SPSLN0	0	R/W	These bits specify a sequence length when this module in master mode performs sequential operations. This module in master mode changes command registers 0 to 3 (SPCMD0 to SPCMD3) to be referenced and the order in which they are referenced according to the sequence length that is set in the SPSLN1 and SPSLN0 bits. The relationship among the setting of bits SPSLN1 and SPSLN0, sequence length, and SPCMD0 to SPCMD3 referenced by this module is shown below. In slave mode, SPCMD0 is always referenced. Sequence Length / Referenced SPCMD # 00: 1 → 0 → … 01: 2 → 1 → 0 → … 10: 3 → 0 → 1 → 2 → 0 → … 11: 4 → 0 → 1 → 2 → 3 → 0 → …

chanhvinh.com

17.3.7 Sequence Status Register (SPSSR)

SPSSR indicates the sequence control status when this module operates in master mode.

Bit:	7	6	5	4	3	2	1	0
	—	—	—	—	—	—	SPCP1	SPCP0
Initial value:	0	0	0	0	0	0	0	0
R/W:	R	R	R	R	R	R	R	R

Bit	Bit Name	Initial Value	R/W	Description
7 to 2	—	All 0	R	Reserved The write value should always be 0. Otherwise, operation cannot be guaranteed.
1	SPCP1	0	R	Command Pointer
0	SPCP0	0	R	During sequence control, these bits indicate one of the command registers 0 to 3 (SPCMD0 to SPCMD3) that is currently pointed to by the pointer. The relationship between the setting of SPCP1 and SPCP0 and SPCMD0 to SPCMD3 is shown below. For the sequence control, see section 17.4.8 (1) (c), Sequence Control. 00: SPCMD0 01: SPCMD1 10: SPCMD2 11: SPCMD3

chanhvinh.com

17.3.8 Bit Rate Register (SPBR)

SPBR sets the bit rate in master mode. If the contents of SPBR are changed while the MSTR and SPE bits in the control register (SPCR) are 1 with the function of this module enabled in master mode, the subsequent operation cannot be guaranteed.

Bit:	7	6	5	4	3	2	1	0
	SPR7	SPR6	SPR5	SPR4	SPR3	SPR2	SPR1	SPR0
Initial value:	1	1	1	1	1	1	1	1
R/W:	R/W	R/W	R/W	R/W	R/W	R/W	R/W	R/W

When this module is used in slave mode, the bit rate depends on the bit rate of the input clock regardless of the settings of SPBR and BRDV.

The bit rate is determined by combinations of SPBR settings and the bit settings in the BRDV1 and BRDV0 bits in the command registers (SPCMD0 to SPCMD3). The equation for calculating the bit rate is given below. In the equation, n denotes an SPBR setting (0, 1, 2, …, 255), and N denotes bit settings in the bits BRDV1 and BRDV0 (0, 1, 2, 3).

$$\text{Bit rate} = \frac{f\,(P1\phi)}{2 \times (n + 1) \times 2^{N}}$$

Table 17.3 shows examples of the relationship between the SPBR register and BRDV1 and BRDV0 bit settings.

Table 17.3 Relationship between SPBR and BRDV1 and BRDV0 Settings

			Bit Rate		
SPBR (n)	**BRDV[1:0] (N)**	**Division Ratio**	**P1ϕ = 50 MHz**	**P1ϕ = 60 MHz**	**P1ϕ = 66.67 MHz**
0	0	2	25.0 Mbps	30.0 Mbps	33.33 Mbps
1	0	4	12.5 Mbps	15.0 Mbps	16.67 Mbps
2	0	6	8.33 Mbps	10.0 Mbps	11.11 Mbps
3	0	8	6.25 Mbps	7.50 Mbps	8.33 Mbps
4	0	10	5.00 Mbps	6.00 Mbps	6.67 Mbps
5	0	12	4.16 Mbps	5.00 Mbps	5.56 Mbps
5	1	24	2.08 Mbps	2.50 Mbps	2.78 Mbps
5	2	48	1.04 Mbps	1.25 Mbps	1.39 Mbps
5	3	96	520 kbps	625 kbps	694.48 kbps
255	3	4096	12.20 kbps	14.64 kbps	16.28 kbps

chanhvinh.com

17.3.9 Data Control Register (SPDCR)

SPDCR selects the width to access SPDR from longword-, word-, and byte-width, and enables or disables dummy data transmission for the master mode operation.

If the contents of SPDCR are changed while bit TEND in the status register (SPSR) indicates that transmission is not completed, the subsequent operation cannot be guaranteed.

Bit:	7	6	5	4	3	2	1	0
	TXDMY	SPLW1	SPLW0	—	—	—	—	—
Initial value:	0	0	1	0	0	0	0	0
R/W:	R/W	R/W	R/W	R	R	R	R	R

Bit	Bit Name	Initial Value	R/W	Description
7	TXDMY	0	R/W	Dummy Data Transmission Enable Enables or disables dummy data transmission. When communication is performed with this bit set to 1, dummy data is transmitted from the MOSI pin and a serial communication can be performed even if there is no transmit data in the transmit buffer. Specifically, if there is no transmit data in the transmit buffer and this bit is set to 1, dummy data is transferred to the shift register. Data previously transmitted from the pin is used as dummy data. If this bit is set to 1 after the initialization and a transfer is performed, the transmitted dummy data is undefined. 0: Disables dummy data transmission. 1: Enables dummy data transmission. Note: This bit is valid only in the master mode.

chanhvinh.com

Bit	Bit Name	Initial Value	R/W	Description
6	SPLW1	0	R/W	Access Width Specification
5	SPLW0	1	R/W	Specifies the width for accessing the data register (SPDR). If the length of data transferred to SPDR does not agree with these bit settings, operation is not guaranteed. 00: Setting prohibited 01: SPDR is accessed in bytes. 10: SPDR is accessed in words. 11: SPDR is accessed in longwords.
4 to 0	—	All 0	R	Reserved The write value should always be 0. Otherwise, operation cannot be guaranteed.

chanhvinh.com

17.3.10 Clock Delay Register (SPCKD)

SPCKD sets a period from the beginning of SSL signal assertion to RSPCK oscillation (RSPCK delay) when the SCKDEN bit in the command register (SPCMD) is 1. If the contents of SPCKD are changed while the MSTR and SPE bits in the control register (SPCR) are 1 with the function of this module enabled in master mode, the subsequent operation cannot be guaranteed.

When using this module in slave mode, set B'000 to SCKDL2 to SCKDL0.

Bit:	7	6	5	4	3	2	1	0
	—	—	—	—	—	SCKDL2	SCKDL1	SCKDL0
Initial value:	0	0	0	0	0	0	0	0
R/W:	R	R	R	R	R	R/W	R/W	R/W

Bit	Bit Name	Initial Value	R/W	Description
7 to 3	—	All 0	R	Reserved The write value should always be 0. Otherwise, operation cannot be guaranteed.
2	SCKDL2	0	R/W	RSPCK Delay Setting
1	SCKDL1	0	R/W	These bits set an RSPCK delay value when the SCKDEN bit in SPCMD is 1.
0	SCKDL0	0	R/W	The relationship between the setting of SCKDL2 to SCKDL0 and the RSPCK delay value is shown below. 000: 1 RSPCK 001: 2 RSPCK 010: 3 RSPCK 011: 4 RSPCK 100: 5 RSPCK 101: 6 RSPCK 110: 7 RSPCK 111: 8 RSPCK

chanhvinh.com

17.3.11 Slave Select Negation Delay Register (SSLND)

SSLND sets a period (SSL negation delay) from the transmission of a final RSPCK edge to the negation of the SSL signal during a serial transfer by this module in master mode. If the contents of SSLND are changed while the MSTR and SPE bits in the control register (SPCR) are 1 with the function of this module enabled in master mode, the subsequent operation cannot be guaranteed.

When using this module in slave mode, set B'000 to SLNDL2 to SLNDL0.

Bit:	7	6	5	4	3	2	1	0
	—	—	—	—	—	SLNDL2	SLNDL1	SLNDL0
Initial value:	0	0	0	0	0	0	0	0
R/W:	R	R	R	R	R	R/W	R/W	R/W

Bit	Bit Name	Initial Value	R/W	Description
7 to 3	—	All 0	R	Reserved The write value should always be 0. Otherwise, operation cannot be guaranteed.
2	SLNDL2	0	R/W	SSL Negation Delay Setting
1	SLNDL1	0	R/W	These bits set an SSL negation delay when the SLNDEN bit in SPCMD is 1.
0	SLNDL0	0	R/W	The relationship between the setting of SLNDL2 to SLNDL0 and the SSL negation delay value is shown below. 000: 1 RSPCK 001: 2 RSPCK 010: 3 RSPCK 011: 4 RSPCK 100: 5 RSPCK 101: 6 RSPCK 110: 7 RSPCK 111: 8 RSPCK

chanhvinh.com

17.3.12 Next-Access Delay Register (SPND)

SPND sets a non-active period (next-access delay) after termination of a serial transfer when the SPNDEN bit in the command register (SPCMD) is 1. If the contents of SPND are changed while the MSTR and SPE bits in the control register (SPCR) are 1 with the function of this module enabled in master mode, the subsequent operation cannot be guaranteed.

When using this module in slave mode, set B'000 to SPNDL2 to SPNDL0.

Bit:	7	6	5	4	3	2	1	0
	—	—	—	—	—	SPNDL2	SPNDL1	SPNDL0
Initial value:	0	0	0	0	0	0	0	0
R/W:	R	R	R	R	R	R/W	R/W	R/W

Bit	Bit Name	Initial Value	R/W	Description
7 to 3	—	All 0	R	Reserved The write value should always be 0. Otherwise, operation cannot be guaranteed.
2	SPNDL2	0	R/W	Next-Access Delay Setting
1	SPNDL1	0	R/W	These bits set a next-access delay when the SPNDEN bit in SPCMD is 1.
0	SPNDL0	0	R/W	The relationship between the setting of SPNDL2 to SPNDL0 and the next-access delay value is shown below. 000: 1 RSPCK + 2 P1ϕ 001: 2 RSPCK + 2 P1ϕ 010: 3 RSPCK + 2 P1ϕ 011: 4 RSPCK + 2 P1ϕ 100: 5 RSPCK + 2 P1ϕ 101: 6 RSPCK + 2 P1ϕ 110: 7 RSPCK + 2 P1ϕ 111: 8 RSPCK + 2 P1ϕ

chanhvinh.com

17.3.13 Command Register (SPCMD)

Each channel has four command registers (SPCMD0 to SPCMD3). SPCMD0 to SPCMD3 are used to set a transfer format for master mode operation. Some of the bits in SPCMD0 are used to set a transfer mode for slave mode operation. In master mode, this module sequentially references SPCMD0 to SPCMD3 according to the settings in bits SPSLN1 and SPSLN0 in the sequence control register (SPSCR), and executes the serial transfer that is set in the referenced SPCMD.

While bit TEND in the status register (SPSR) indicates that transmission is not completed, correct operation of this module cannot be guaranteed if SPCMD is changed that is referred by this module. SPCMD referenced by this module in master mode can be checked by means of bits SPCP1 and SPCP0 in the sequence status register (SPSSR). When the function of this module in slave mode is enabled, operation cannot be guaranteed if the value set in SPCMD0 is changed.

Bit:	15	14	13	12	11	10	9	8
	SCK DEN	SLN DEN	SPN DEN	LSBF	SPB3	SPB2	SPB1	SPB0
Initial value:	0	0	0	0	0	1	1	1
R/W:	R/W	R/W	R/W	R/W	R/W	R/W	R/W	R/W

Bit:	7	6	5	4	3	2	1	0
	SSLKP	—	—	—	BRDV1	BRDV0	CPOL	CPHA
Initial value:	0	0	0	0	1	1	0	1
R/W:	R/W	R	R	R	R/W	R/W	R/W	R/W

Bit	Bit Name	Initial Value	R/W	Description
15	SCKDEN	0	R/W	RSPCK Delay Setting Enable Sets the period from the point this module in master mode activates the SSL signal until the RSPCK starts oscillation (RSPCK delay). If the SCKDEN bit is 0, this module sets the RSPCK delay to 1 RSPCK. If the SCKDEN bit is 1, this module starts the oscillation of RSPCK at an RSPCK delay in compliance with the clock delay register (SPCKD) settings. To use this module in slave mode, the SCKDEN bit should be set to 0. 0: An RSPCK delay of 1 RSPCK 1: An RSPCK delay equal to SPCKD settings.

chanhvinh.com

Bit	Bit Name	Initial Value	R/W	Description
14	SLNDEN	0	R/W	SSL Negation Delay Setting Enable Sets the period from the point this module in master mode stops RSPCK oscillation until this module sets the SSL signal inactive (SSL negation delay). If the SLNDEN bit is 0, this module sets the SSL negation delay to 1 RSPCK. If the SLNDEN bit is 1, this module negates the SSL signal at an SSL negation delay in compliance with the slave select negation delay register (SSLND) settings. To use this module in slave mode, the SLNDEN bit should be set to 0. 0: An SSL negation delay of 1 RSPCK 1: An SSL negation delay equal to SSLND settings.
13	SPNDEN	0	R/W	Next-Access Delay Enable Sets the period from the point this module in master mode terminates a serial transfer and sets the SSL signal inactive until this module enables the SSL signal assertion for the next access (next-access delay). If the SPNDEN bit is 0, this module sets the next-access delay to 1 RSPCK + 2 P1ϕ. If the SPNDEN bit is 1, this module inserts a next-access delay in compliance with the next-access delay register (SPND) settings. To use this module in slave mode, the SPNDEN bit should be set to 0. 0: A next-access delay of 1 RSPCK + 2 P1ϕ 1: A next-access delay equal to SPND settings.

chanhvinh.com

Bit	Bit Name	Initial Value	R/W	Description
12	LSBF	0	R/W	LSB First Sets the data format in master mode or slave mode to MSB first or LSB first. 0: MSB first 1: LSB first
11	SPB3	0	R/W	Data Length Setting
10	SPB2	1	R/W	These bits set a transfer data length in master mode or slave mode.
9	SPB1	1	R/W	0100 to 0111: 8 bits
8	SPB0	1	R/W	1111: 16 bits 0010, 0011: 32 bits Others: Setting prohibited
7	SSLKP	0	R/W	SSL Signal Level Keeping When this module in master mode performs a serial transfer, this bit specifies whether the SSL signal level for the current command is to be kept or negated between the SSL negation timing associated with the current command and the SSL assertion timing associated with the next command. To use this module in slave mode, the SSLKP bit should be set to 0. 0: Negates the SSL signal upon completion of transfer. 1: Keeps the SSL signal level from the end of the transfer until the beginning of the next access.

chanhvinh.com

Bit	Bit Name	Initial Value	R/W	Description
6 to 4	—	All 0	R	Reserved The write value should always be 0. Otherwise, operation cannot be guaranteed.
3	BRDV1	1	R/W	Bit Rate Division Setting
2	BRDV0	1	R/W	These bits are used to determine the bit rate. A bit rate is determined by combinations of bits BRDV1 and BRDV 0 and the settings in the bit rate register (SPBR) (see section 17.3.8, Bit Rate Register (SPBR)). The settings in SPBR determine the base bit rate. The settings in bits BRDV1 and BRDV0 are used to select a bit rate which is obtained by dividing the base bit rate by 1, 2, 4, or 8. In the bits SPCMD0 to SPCMD3, different BRDV1 and BRDV0 settings can be specified. This permits the execution of serial transfers at a different bit rate for each command. 00: Select the base bit rate 01: Select the base bit rate divided by 2 10: Select the base bit rate divided by 4 11: Select the base bit rate divided by 8

chanhvinh.com

Bit	Bit Name	Initial Value	R/W	Description
1	CPOL	0	R/W	RSPCK Polarity Setting Sets an RSPCK polarity in master or slave mode. When data communication is performed between the Renesas serial peripheral interface module and the other modules, the same RSPCK polarity should be set for both modules. 0: RSPCK = 0 when idle 1: RSPCK = 1 when idle
0	CPHA	1	R/W	RSPCK Phase Setting Sets an RSPCK phase in master or slave mode. When data communication is performed between the Renesas serial peripheral interface module and the other modules, the same RSPCK phase should be set for both modules. 0: Data sampling on odd edge, data variation on even edge 1: Data variation on odd edge, data sampling on even edge

chanhvinh.com

17.3.14 Buffer Control Register (SPBFCR)

SPBFCR resets the number of data units in the transmit buffer (SPTX) or receive buffer (SPRX) and sets the number of triggering data units.

Bit:	7	6	5	4	3	2	1	0
	TXRST	RXRST	TXTRG[1:0]		—	RXTRG[2:0]		
Initial value:	0	0	0	0	0	0	0	0
R/W:	R/W	R/W	R/W	R/W	R	R/W	R/W	R/W

Bit	Bit Name	Initial Value	R/W	Description
7	TXRST	0	R/W	Transmit Buffer Data Reset Resets the transmit buffer to an empty state. Transmit data in the transmit buffer becomes invalid when this bit is set to 1. 0: Disables the reset operation*. 1: Enables the reset operation Note: The reset operation is performed after a power-on reset.
6	RXRST	0	R/W	Receive Buffer Data Reset Resets the receive buffer to an empty state. Receive data in the receive buffer becomes invalid when this bit is set to 1. 0: Disables the reset operation*. 1: Enables the reset operation Note: The reset operation is performed after a power-on reset.

chanhvinh.com

Bit	Bit Name	Initial Value	R/W	Description
5, 4	TXTRG[1:0]	00	R/W	Transmit Buffer Data Triggering Number Specifies the timing at which the transmit buffer empty state is determined, that is when the SPTEF flag in the status register is set. When the number of bytes of data in the transmit buffer (SPTX) is equal to or less than the specified triggering number, the SPTEF flag is set to 1. 00: 7 bytes (1)* 01: 6 bytes (2)* 10: 4 bytes (4)* 11: 0 bytes (8)* Note: The value in the parenthesis shows the number of available bytes in the transmit buffer (SPTX).
3	—	0	R	Reserved The write value should always be 0. Otherwise, operation cannot be guaranteed.
2 to 0	RXTRG[2:0]	000	R/W	Receive Buffer Data Triggering Number Specifies the timing at which the receive buffer full state is determined, that is when the SPRF flag in the status register is set. When the number of bytes of data in the receive buffer (SPRX) is equal to or greater than the specified triggering number, the SPRF flag is set to 1. 000: 1 byte (31)* 001: 2 bytes (30)* 010: 4 bytes (28)* 011: 8 bytes (24)* 100: 16 bytes (16)* 101: 24 bytes (8)* 110: 32 bytes (0)* 111: 5 bytes (27)* Note: * The value in the parenthesis shows the number of available bytes in the receive buffer (SPRX).

chanhvinh.com

17.3.15 Buffer Data Count Setting Register (SPBFDR)

SPBFDR indicates the number of data units stored in the transmit buffer (SPTX) and receive buffer (SPRX). The upper eight bits indicate the number of transmit data units in SPTX and the lower eight bits indicate the number of receive data units in SPRX.

Bit:	15	14	13	12	11	10	9	8
	—	—	—	—	T[3:0]			
Initial value:	0	0	0	0	0	0	0	0
R/W:	R	R	R	R	R	R	R	R

Bit:	7	6	5	4	3	2	1	0
	—	—	R[5:0]					
Initial value:	0	0	0	0	0	0	0	0
R/W:	R	R	R	R	R	R	R	R

Bit	Bit Name	Initial Value	R/W	Description
15 to 12	—	All 0	R	Reserved The write value should always be 0. Otherwise, operation cannot be guaranteed.
11 to 8	T[3:0]	0000	R	Indicates the number of bytes of data to be transmitted in SPTX. B'0000 indicates that SPTX is empty. B'1000 indicates that SPTX is full.
7, 6	—	All 0	R	Reserved The write value should always be 0. Otherwise, operation cannot be guaranteed.
5 to 0	R[5:0]	000000	R	Shows the number of bytes of received data in SPTX. B'000000 indicates that SPRX is empty. B'100000 indicates that SPRX is full.

chanhvinh.com

17.4 Operation

In this section, the serial transfer period means a period from the beginning of driving valid data to the fetching of the final valid data.

17.4.1 Overview of Operations

This module is capable of serial transfers in slave mode and master mode. A particular mode of this module can be selected by using the MSTR bit in the control register (SPCR). Table 17.4 gives the relationship between the modes and SPCR settings, and a description of each mode.

Table 17.4 Relationship between Modes and SPCR and Description of Each Mode

Mode	Slave (SPI Operation)	Master (SPI Operation)
MSTR bit setting	0	1
MODFEN bit setting	0 or 1	0
RSPCK signal	Input	Output
MOSI signal	Input	Output
MISO signal	Output/Hi-Z	Input
SSL signal	Input	Output
SSL polarity modification function	Supported	Supported
Transfer rate	Up to P1ϕ/8	Up to P1ϕ/2
Clock source	RSPCK input	On-chip baud rate generator
Clock polarity	Two	Two
Clock phase	Two	Two
First transfer bit	MSB/LSB	MSB/LSB
Transfer data length	8, 16, or 32 bits	8, 16, or 32 bits
Burst transfer	Possible (CPHA = 1)	Possible (CPHA = 0,1)
RSPCK delay control	Not supported	Supported
SSL negation delay control	Not supported	Supported
Next-access delay control	Not supported	Supported
Transfer activation method	SSL input active or RSPCK oscillation	Transmit buffer is written when SPE = 1
Sequence control	Not supported	Supported

chanhvinh.com

Mode	Slave (SPI Operation)	Master (SPI Operation)
Transmit buffer empty detection	Supported	Supported
Receive buffer full detection	Supported	Supported
Overrun error detection	Supported	Not Supported
Mode fault error detection	Supported (MODFEN = 1)	Not supported

17.4.2 Pin Control

According to the MSTR bit in the control register (SPCR), this module can automatically switch pin directions and output modes. Table 17.5 shows the relationship between pin states and bit settings.

Table 17.5 Relationship between Pin States and Bit Settings

Mode	Pin	Pin State*[1]
Master mode (SPI operation) (MSTR = 1)	RSPCK	CMOS output
	SSL	CMOS output
	MOSI	CMOS output
	MISO	Input
Slave mode (SPI operation) (MSTR = 0)	RSPCK	Input
	SSL	Input
	MOSI	Input
	MISO*	CMOS output/Hi-Z

Note: When SSL is at the non-active level or the SPE bit in SPCR is clear to 0, the pin state is Hi-Z.

This module in master mode (SPI operation) determines MOSI signal values during the SSL negation period (including the SSL retention period during a burst transfer) according to MOIFE and MOIFV bit settings in SPPCR, as shown in table 17.6.

Table 17.6 MOSI Signal Value Determination during SSL Negation Period

MOIFE	MOIFV	MOSI Signal Value during SSL Negation Period
0	0, 1	Final data from previous transfer
1	0	Always 0
1	1	Always 1

chanhvinh.com

17.4.3 System Configuration Example

(1) Master/Slave (with This LSI Acting as Master)

Figure 17.2 shows a master/slave system configuration example when this LSI is used as a master. In master/slave configuration, the SSL output of this LSI (master) is not used. The SSL input of the slave is fixed to the low level, and the slave is always maintained in a selected state. In the transfer format corresponding to the case where the CPHA bit in the control register (SPCR) is 0, there are slave devices for which the SSL signal cannot be fixed to the active level. In situations where the SSL signal cannot be fixed, the SSL output of this LSI should be connected to the SSL input of the slave device.

This LSI (master) always drives the RSPCK and MOSI. The slave always drives the MISO.

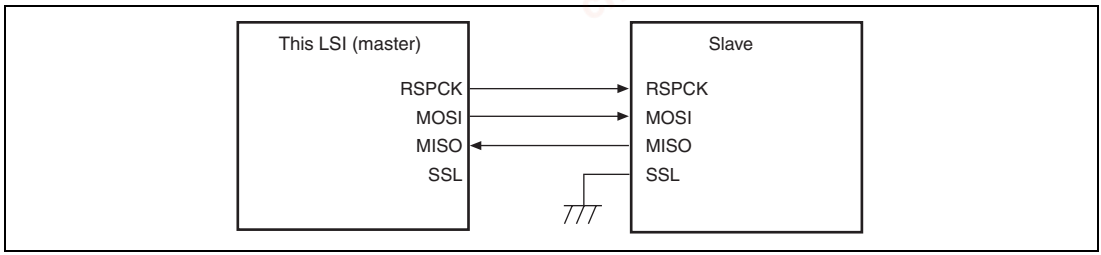

Figure 17.2 Master/Slave Configuration Example (This LSI = Master)

chanhvinh.com

(2) Master/Slave (with This LSI Acting as Slave)

Figure 17.3 shows a master/slave system configuration example when this LSI is used as a slave. When this LSI is to operate as a slave, the SSL pin is used as SSL input. The master always drives the RSPCK and MOSI. This LSI (slave) always drives the MISO. When SSL is at the non-active level, the pin state is Hi-Z.

In the slave configuration in which the CPHA bit in the command register (SPCMD) is set to 1, the SSL input of this LSI (slave) is fixed to the 0 level, this LSI (slave) is always maintained in a selected state, and in this manner it is possible to execute serial transfer (figure 17.4).

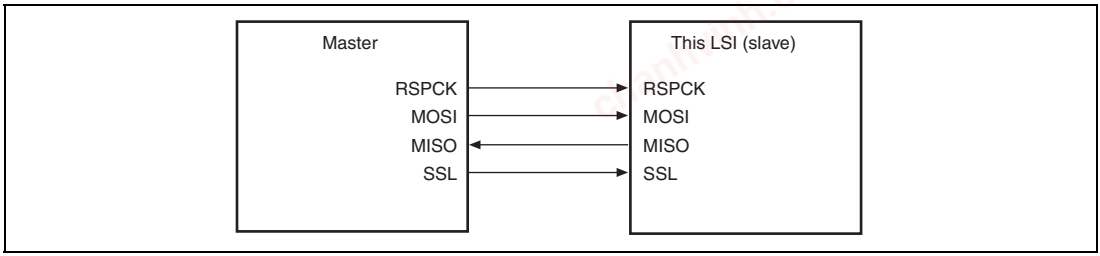

Figure 17.3 Master/Slave Configuration Example (This LSI = Slave)

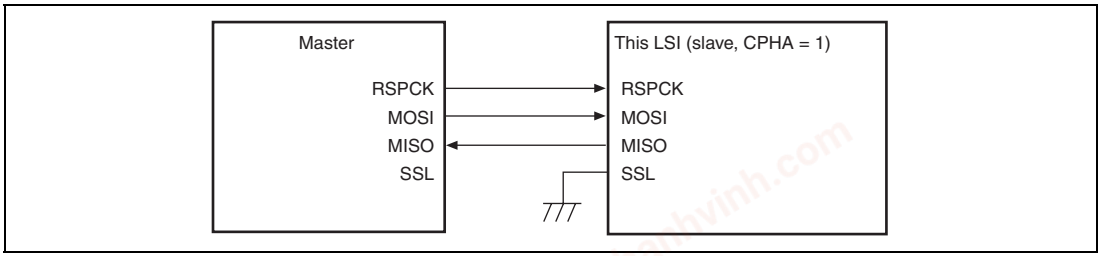

Figure 17.4 Master/Slave Configuration Example (This LSI = Slave, CPHA = 1)

chanhvinh.com

(3) Master/Multi-Slave (with This LSI Acting as Slave)

Figure 17.5 shows a master/multi-slave system configuration example when this LSI is used as a slave. In the example of figure 17.5, the system is comprised of an master and two LSIs (slave X and slave Y).

The RSPCK and MOSI outputs of the master are connected to the RSPCK and MOSI inputs of the LSIs (slave X and slave Y). The MISO outputs of the LSIs (slave X and slave Y) are all connected to the MISO input of the master. SSLX and SSLY outputs of the master are connected to the SSL inputs of the LSIs (slave X and slave Y), respectively.

The master always drives RSPCK, MOSI, SSLX, and SSLY. Of the LSIs (slave X and slave Y), the slave that receives low level input into the SSL0 input drives MISO.

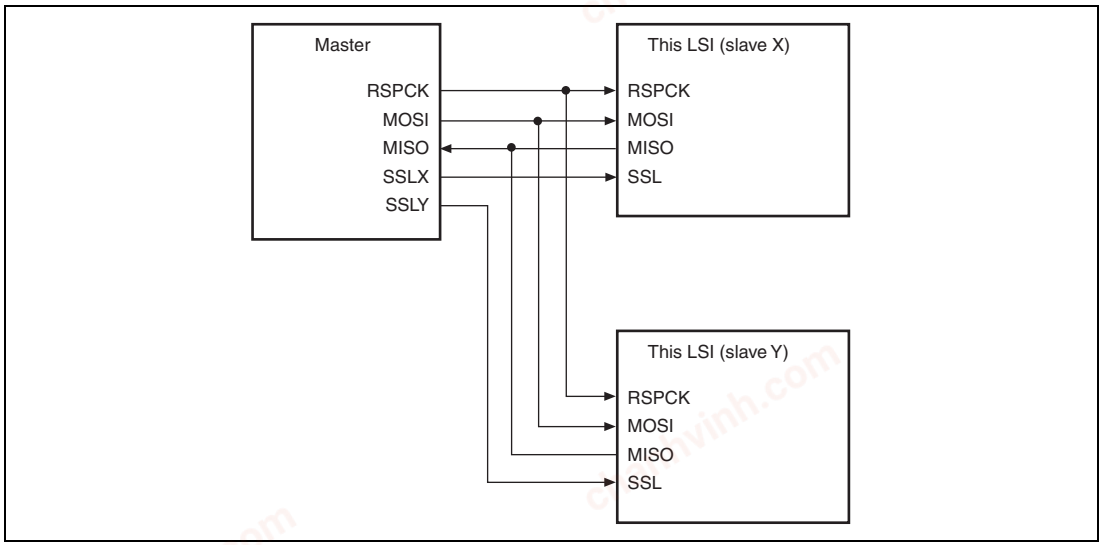

Figure 17.5 Master/Multi-Slave Configuration Example (This LSI = Slave)

chanhvinh.com

17.4.4 Transfer Format

(1) CPHA = 0

Figure 17.6 shows a sample transfer format for the serial transfer of 8-bit data when the CPHA bit in the command register (SPCMD) is 0. In figure 17.6, RSPCK (CPOL = 0) indicates the RSPCK signal waveform when the CPOL bit in SPCMD is 0; RSPCK (CPOL = 1) indicates the RSPCK signal waveform when the CPOL bit is 1. The sampling timing represents the timing at which this module fetches serial transfer data into the shift register. The input/output directions of the signals depend on the settings of this module. For details, see section 17.4.2, Pin Control.

When the CPHA bit is 0, the driving of valid data to the MOSI and MISO signals commences at an SSL signal assertion timing. The first RSPCK signal change timing that occurs after the SSL signal assertion becomes the first transfer data fetching timing. After this timing, data is sampled at every 1 RSPCK cycle. The change timing for MOSI and MISO signals is always 1/2 RSPCK cycle after the transfer data fetch timing. The settings in the CPOL bit do not affect the RSPCK signal operation timing; they only affect the signal polarity.

t1 denotes a period from an SSL signal assertion to RSPCK oscillation (RSPCK delay). t2 denotes a period from the cessation of RSPCK oscillation to an SSL signal negation (SSL negation delay). t3 denotes a period in which SSL signal assertion is suppressed for the next transfer after the end of serial transfer (next-access delay). t1, t2, and t3 are controlled by a master device running on the system. For a description of t1, t2, and t3 when this module is in master mode, see section 17.4.3 (1), Master/Slave (with This LSI Acting as Master).

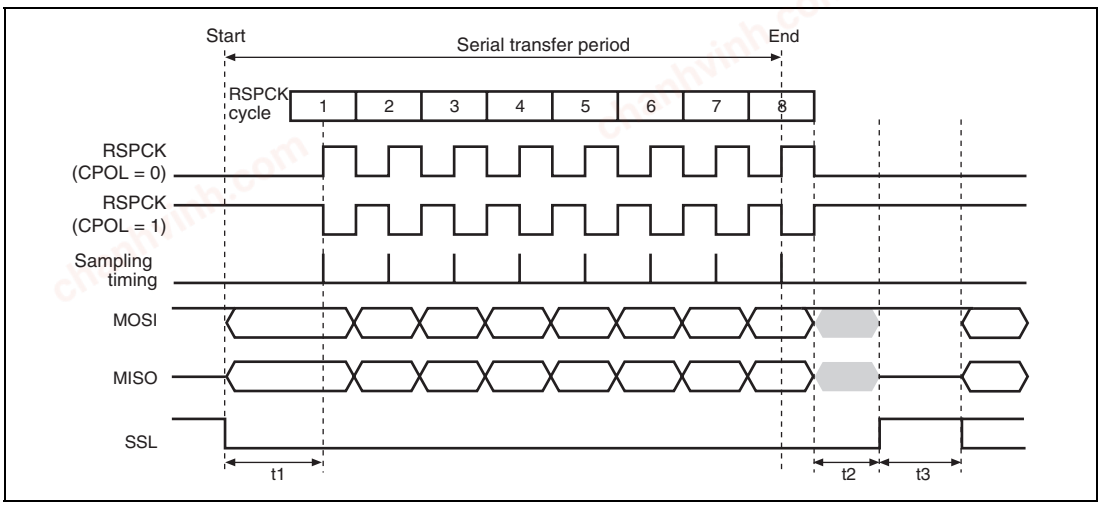

Figure 17.6 Transfer Format (CPHA = 0)

chanhvinh.com

(2) CPHA = 1

Figure 17.7 shows a sample transfer format for the serial transfer of 8-bit data when the CPHA bit in the command register (SPCMD) is 1. In figure 17.7, RSPCK (CPOL = 0) indicates the RSPCK signal waveform when the CPOL bit in SPCMD is 0; RSPCK (CPOL = 1) indicates the RSPCK signal waveform when the CPOL bit is 1. The sampling timing represents the timing at which this module fetches serial transfer data into the shift register. The input/output directions of the signals depend on the modes (master or slave). For details, see section 17.4.2, Pin Control.

When the CPHA bit is 1, the driving of invalid data to the MOSI and MISO signals commences at an SSL signal assertion timing. The driving of valid data to the MOSI and MISO signals commences at the first RSPCK signal change timing that occurs after the SSL signal assertion. After this timing, data is updated at every 1 RSPCK cycle. The transfer data fetch timing is always 1/2 RSPCK cycle after the data update timing. The settings in the CPOL bit do not affect the RSPCK signal operation timing; they only affect the signal polarity.

t1, t2, and t3 are the same as those in the case of CPHA = 0. For a description of t1, t2, and t3 when this module is in master mode, see section 17.4.3 (1), Master/Slave (with This LSI Acting as Master).

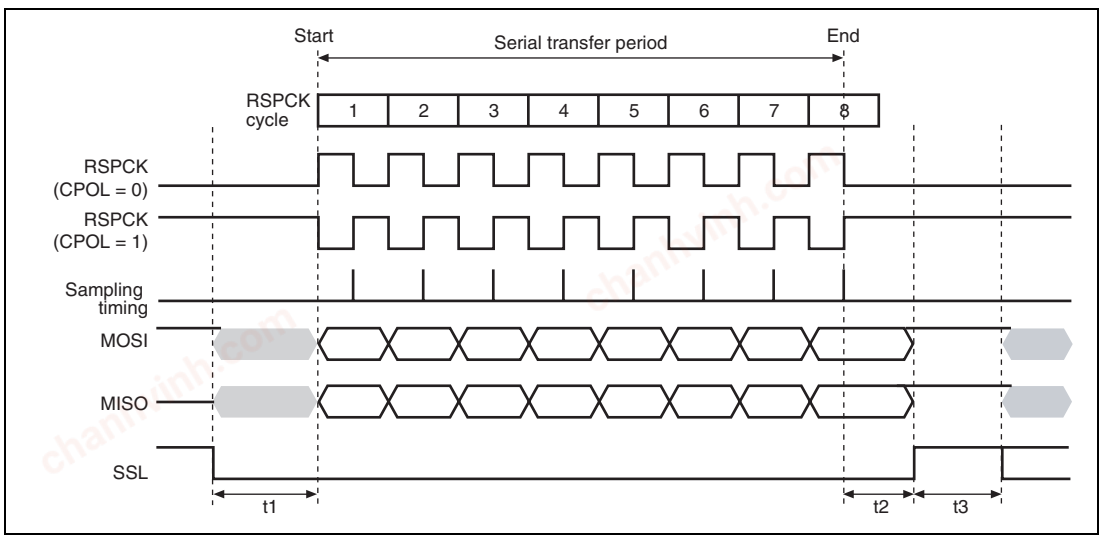

Figure 17.7 Transfer Format (CPHA = 1)

chanhvinh.com

17.4.5 Data Format

The data format depends on the settings in the command register (SPCMD). Irrespective of MSB/LSB first, this module treats the range from the LSB of the data register (SPDR) to the assigned data length as transfer data.

(1) MSB First Transfer (32-Bit Data)

Figure 17.8 shows the operation of the transmit buffer (SPTX) and the shift register when this module performs a 32-bit data length MSB-first data transfer.

The CPU or direct memory access controller writes T31 to T00 to the transmit buffer of SPDR. If the shift register is empty, this module copies the data in the transmit buffer to the shift register, and fully populates the shift register. When serial transfer starts, this module outputs data from the MSB (bit 31) of the shift register, and shifts in the data from the LSB (bit 0) of the shift register. When the RSPCK cycle required for the serial transfer of 32 bits has passed, data R31 to R00 is stored in the shift register. In this state, this module copies the data from the shift register to the receive buffer, and empties the shift register. If the receive buffer does not have a space for the receive data length after the receive data has been copied from the shift register to the receive buffer, another serial transfer will not be started. In order to start another serial transfer, data for the receive data length should be read from the receive buffer to secure the necessary space in the receive buffer.

If another serial transfer is started before the CPU or direct memory access controller writes to the transmit buffer, received data R31 to R00 is shifted out from the shift register.

chanhvinh.com

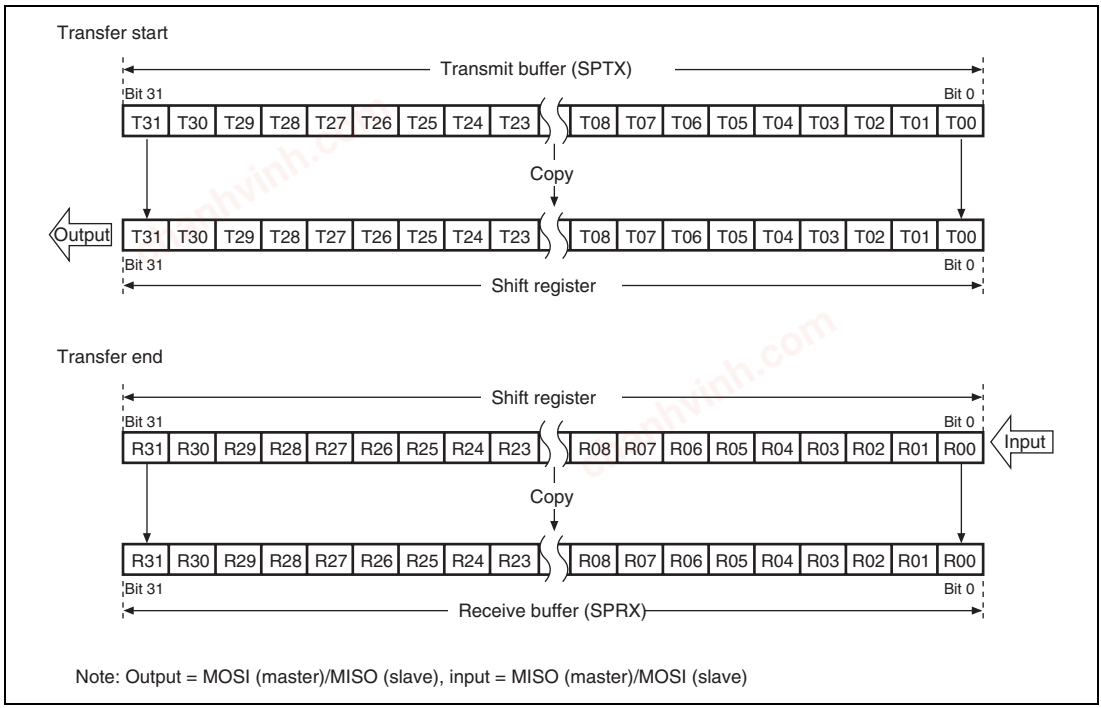

Figure 17.8 MSB First Transfer (32-Bit Data)

chanhvinh.com

(2) MSB First Transfer (16-Bit Data)

Figure 17.9 shows the operation of the transmit buffer (SPTX) and the shift register when this module performs a 16-bit data length MSB-first data transfer.

The CPU or direct memory access controller writes T15 to T00 to the transmit buffer. If the shift register is empty, this module copies the data in the transmit buffer to the shift register, and fully populates the shift register. When serial transfer starts, this module outputs data from bit 15 of the shift register, and shifts in the data from the LSB (bit 0) of the shift register. When the RSPCK cycle required for the serial transfer of 16 bits has passed, received data R15 to R00 is stored in bits 15 to 0 of the shift register. After completion of the serial transfer, data that existed before the transfer is retained in bits 31 to 16 in the shift register. In this state, this module copies the data from the shift register to the receive buffer, and empties the shift register. If the receive buffer does not have a space for the receive data length after receive data has been copied from the shift register to the receive buffer, another serial transfer will not be started. In order to start another serial transfer, data for the receive data length should be read from the receive buffer to secure the necessary space in the receive buffer.

If another serial transfer is started before the CPU or direct memory access controller writes to the transmit buffer, received data R15 to R00 is shifted out from the shift register.

chanhvinh.com

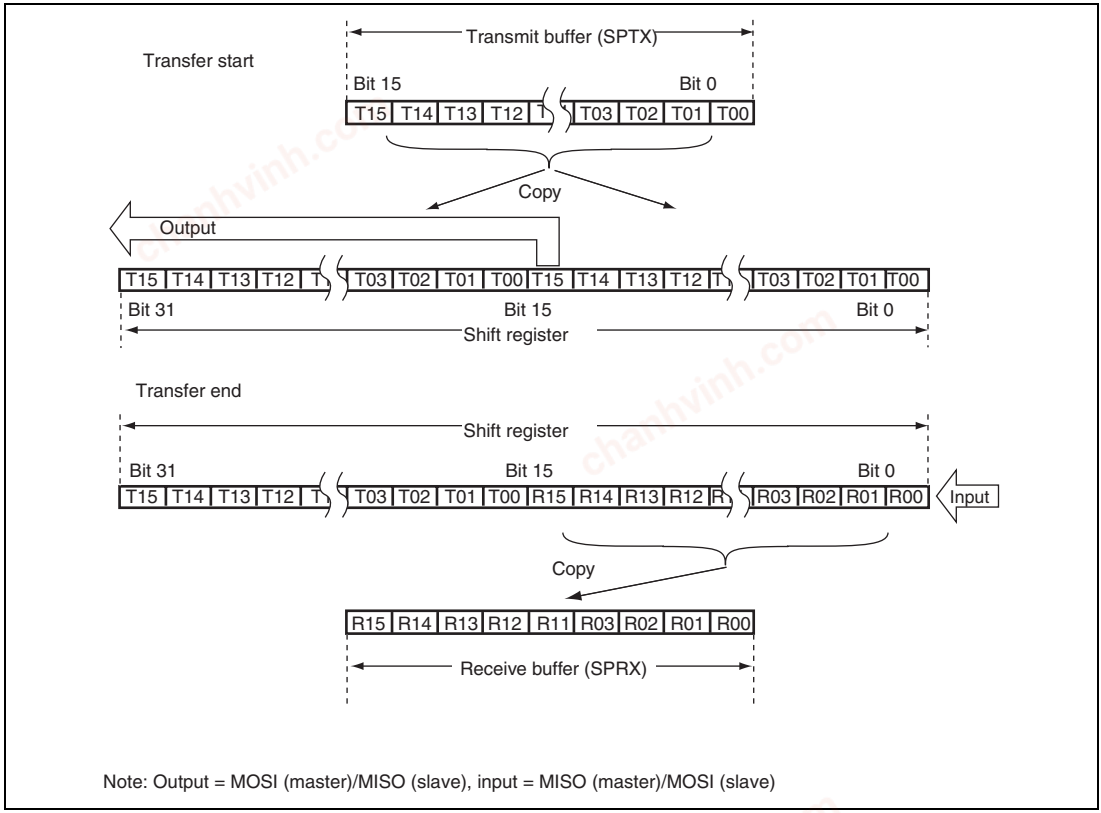

Figure 17.9 MSB First Transfer (16-Bit Data)

chanhvinh.com

(3) MSB First Transfer (8-Bit Data)

Figure 17.10 shows the operation of the transmit buffer (SPDR) and the shift register when this module performs an 8-bit data length MSB-first data transfer.

The CPU or direct memory access controller writes T07 to T00 to the transmit buffer. If the shift register is empty, this module copies the data in the transmit buffer to the shift register, and fully populates the shift register. When serial transfer starts, this module outputs data from bit 7 of the shift register, and shifts in the data from the LSB (bit 0) of the shift register. When the RSPCK cycle required for the serial transfer of 8 bits has passed, received data R07 to R00 is stored in bits 7 to 0 of the shift register. After completion of the serial transfer, data that existed before the transfer is retained in bits 31 to 8 in the shift register. In this state, this module copies the data from the shift register to the receive buffer, and empties the shift register. If the receive buffer does not have a space for the receive data length after receive data has been copied from the shift register to the receive buffer, another serial transfer will not be started. In order to start another serial transfer, data for the receive data length should be read from the receive buffer to secure the necessary area in the receive buffer.

If another serial transfer is started before the CPU or direct memory access controller writes to the transmit buffer, received data R07 to R00 is shifted out from the shift register.

chanhvinh.com

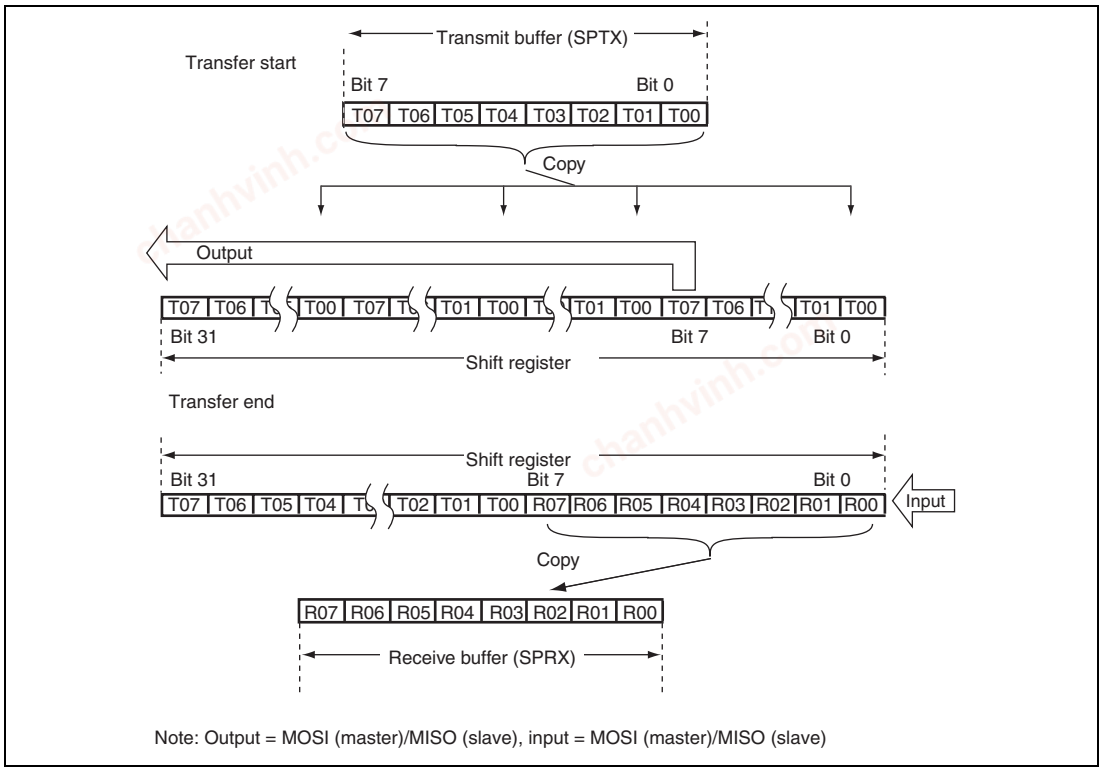

Figure 17.10 MSB First Transfer (8-Bit Data)

chanhvinh.com

(4) LSB First Transfer (32-Bit Data)

Figure 17.11 shows the operation of the transmit buffer (SPTX) and the shift register when this module performs a 32-bit data length LSB-first data transfer.

The CPU or direct memory access controller writes T31 to T00 to the transmit buffer. If the shift register is empty, this module reverses the order of the bits of the data in the transmit buffer, copies it to the shift register, and fully populates the shift register. When serial transfer starts, this module outputs data from the MSB (bit 31) of the shift register, and shifts in the data from the LSB (bit 0) of the shift register. When the RSPCK cycle required for the serial transfer of 32 bits has passed, data R00 to R31 is stored in the shift register. In this state, this module copies the data, in which the order of the bits is reversed, from the shift register to the receive buffer, and empties the shift register.

If the receive buffer does not have a space for the receive data length after receive data has been copied from the shift register to the receive buffer, another serial transfer will not be started. In order to start another serial transfer, data for the receive data length should be read from the receive buffer to secure the necessary space in the receive buffer.

If another serial transfer is started before the CPU or direct memory access controller writes to the transmit buffer of the SPDR, received data R00 to R31 is shifted out from the shift register.

chanhvinh.com

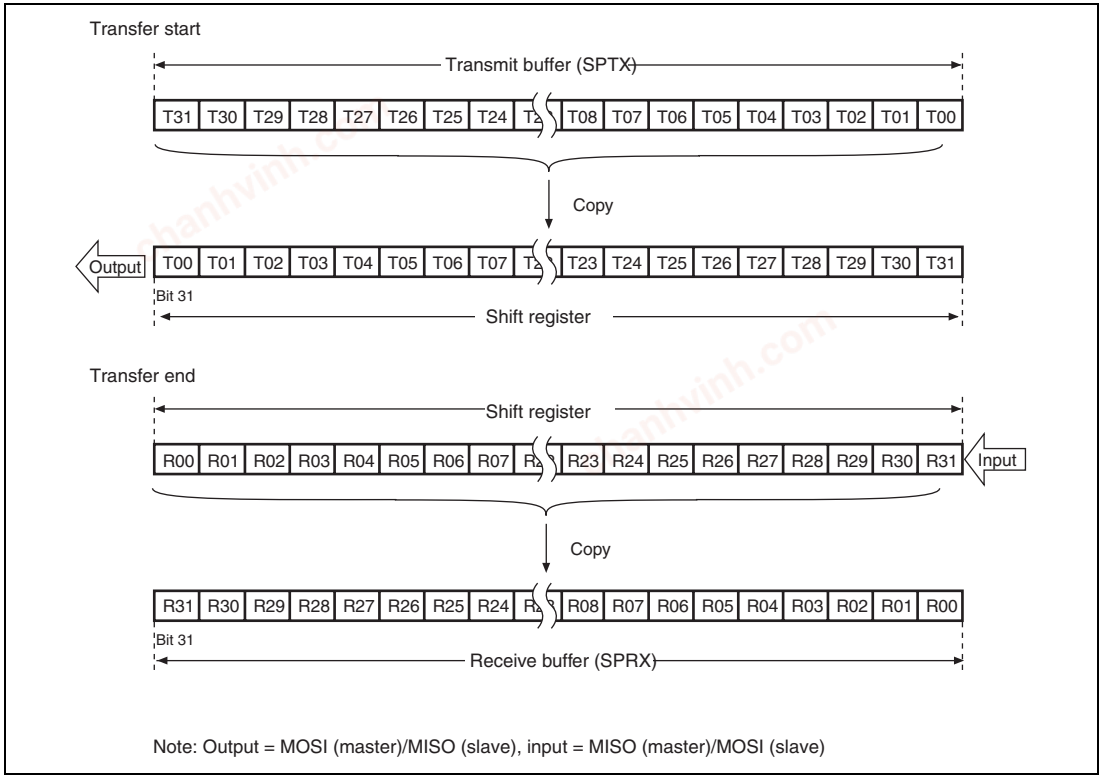

Figure 17.11 LSB First Transfer (32-Bit Data)

chanhvinh.com

(5) LSB First Transfer (16-Bit Data)

Figure 17.12 shows the operation of the transmit buffer (SPTX) and the shift register when this module performs a 16-bit data length LSB-first data transfer.

The CPU or direct memory access controller writes T15 to T00 to the transmit buffer. If the shift register is empty, this module reverses the order of the bits of the data in the transmit buffer, copies it to the shift register, and fully populates the shift register. When serial transfer starts, this module outputs data from the MSB (bit 31) of the shift register, and shifts in the data from bit 16 of the shift register. When the RSPCK cycle required for the serial transfer of 16 bits has passed, received data R00 to R15 is stored in bits 31 to 16 of the shift register. After completion of the serial transfer, data that existed before the transfer is retained in bits 15 to 0 of the shift register. In this state, this module copies the data, in which the order of the bits is reversed, from the shift register to the receive buffer of SPDR, and empties the shift register.

If the receive buffer does not have a space for the receive data length after receive data has been copied from the shift register to the receive buffer, another serial transfer will not be started. In order to start another serial transfer, data for the receive data length should be read from the receive buffer to secure the necessary space in the receive buffer.

If another serial transfer is started before the CPU or direct memory access controller writes to the transmit buffer of SPDR, received data R00 to R15 is shifted out from the shift register.

chanhvinh.com

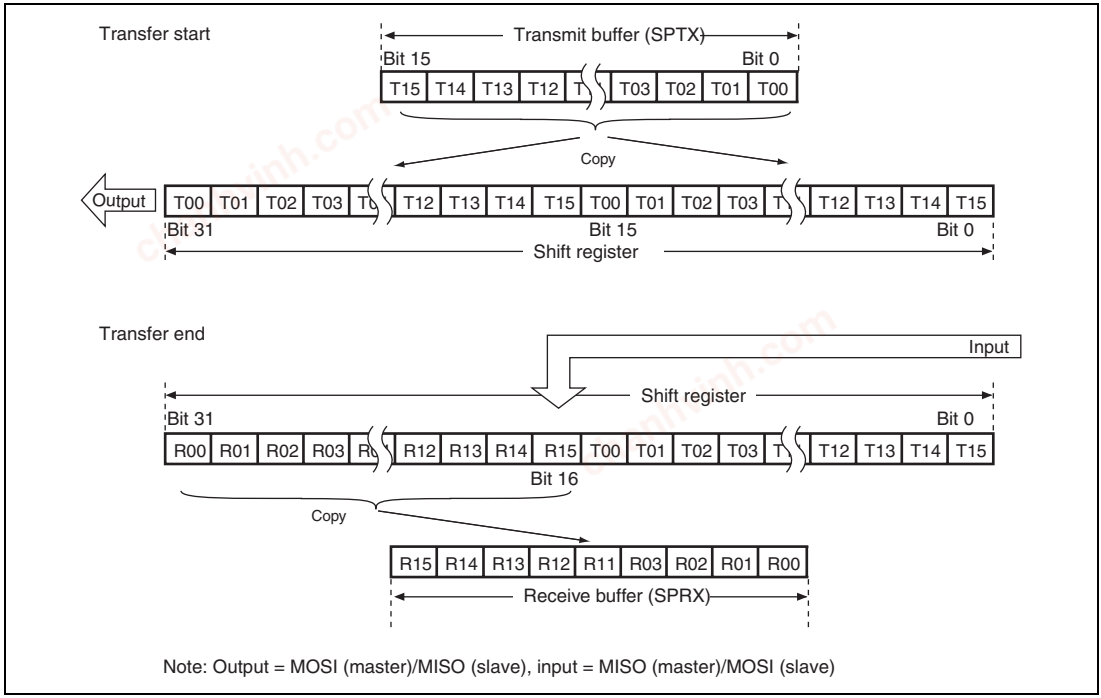

Figure 17.12 LSB First Transfer (16-Bit Data)

chanhvinh.com

(6) LSB First Transfer (8-Bit Data)

Figure 17.13 shows the operation of the transmit buffer (SPTX) and the shift register when this module performs an 8-bit data length LSB-first data transfer.

The CPU or direct memory access controller writes T07 to T00 to the transmit buffer. If the shift register is empty, this module reverses the order of the bits of the data in the transmit buffer, copies it to the shift register, and fully populates the shift register. When serial transfer starts, this module outputs data from the MSB (bit 31) of the shift register, and shifts in the data from bit 24 of the shift register. When the RSPCK cycle required for the serial transfer of 8 bits has passed, received data R00 to R07 is stored in bits 31 to 24 of the shift register. After completion of the serial transfer, data that existed before the transfer is retained in bits 23 to 0 of the shift register. In this state, this module copies the data, in which the order of the bits is reversed, from the shift register to the receive buffer of SPDR, and empties the shift register.

If the receive buffer does not have a space for the receive data length after the receive data has been copied from the shift register to the receive buffer, another serial transfer will not be started. In order to start another serial transfer, data for the receive data length should be read from the receive buffer to secure the necessary space in the receive buffer.

If another serial transfer is started before the CPU or direct memory access controller writes to the transmit buffer of SPDR, received data R00 to R07 is shifted out from the shift register.

chanhvinh.com

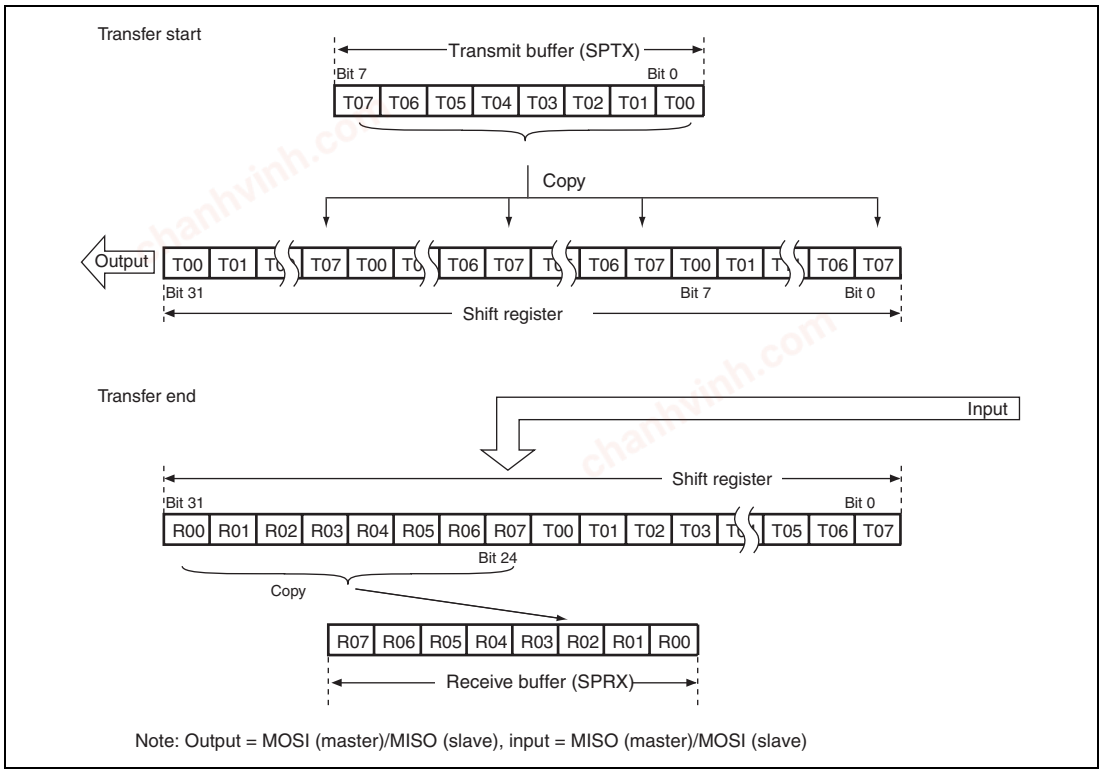

Note: Output = MOSI (master)/MISO (slave), input = MISO (master)/MOSI (slave)

Figure 17.13 LSB First Transfer (8-Bit Data)

chanhvinh.com

17.4.6 Error Detection

In the normal serial transfer, the data written from the data register (SPDR) to the transmit buffer is serially transmitted, and the serially received data can be read from the receive buffer of SPDR. If access is made to SPDR, depending on the status of the transmit buffer/receive buffer or the status at the beginning or end of serial transfer, in some cases non-normal transfers can be executed.

If a non-normal transfer operation occurs, this module detects the event as an overrun error or a mode fault error. Table 17.7 shows the relationship between non-normal transfer operations and the error detection function.

Table 17.7 Relationship between Non-Normal Transfer Operations and Error Detection Function

	Occurrence Condition	Operation	Error Detection
A	SPDR is written when the transmit buffer is full.	Missing write data.	None
B	Serial transfer is started in slave mode when transmit data is still not loaded on the shift register.	Data received in previous serial transfer is serially transmitted.	None
C	SPDR is read when the receive buffer is empty.	The output data is undefined.	None
D	Serial transfer terminates when the receive buffer is full.	Missing serial receive data.	Overrun error (only in slave mode)
E	The SSL input signal is negated during serial transfer in slave mode.	Serial transfer suspended. Missing send/receive data. Operation disabled.	Mode fault error

chanhvinh.com

On operation A shown in table 17.7, this module does not detect an error. Whether SPDR can be written to or not can be checked using the T[3:0] bits in the buffer data count setting register (SPBFDR).

Likewise, this module does not detect an error on operation B. In a serial transfer that was started before the shift register was updated, this module sends the data that was received in the previous serial transfer, and does not treat the operation indicated in B as an error. Note that the received data from the previous serial transfer is retained in the receive buffer of SPDR, thus it can be correctly read.

Similarly, this module does not detect an error on operation C. To prevent extraneous data from being read, the number of receive data units stored in the receive buffer should be read from the R[5:0] bits in the buffer data count setting register (SPBFDR).

An overrun error shown in D is described in section 17.4.6 (1), Overrun Error. A mode fault error shown in E is described in section 17.4.6 (2), Mode Fault Error.

chanhvinh.com

(1) Overrun Error

If serial transfer ends when the receive buffer of the data register (SPDR) is full, this module detects an overrun error, and sets the OVRF bit in SPSR to 1. When the OVRF bit is 1, this module does not copy data from the shift register to the receive buffer so that the data prior to the occurrence of the error is retained in the receive buffer. To reset the OVRF bit in SPSR to 0, either perform a power-on reset, or write a 0 to the OVRF bit after SPSR has been read with the OVRF bit set to 1.

Figure 17.14 shows an example of operation of the SPRF and OVRF bits in SPSR. The SPSR and SPDR accesses shown in figure 17.14 indicates the condition of accesses to SPSR and SPDR, respectively, where I denotes an idle cycle, W a write cycle, and R a read cycle. In the example of figure 17.14, this module performs an 8-bit serial transfer in which the CPHA bit in the command register (SPCMD) is 1, and CPOL is 0. The numbers given under the RSPCK waveform represent the number of RSPCK cycles (i.e., the number of transferred bits).

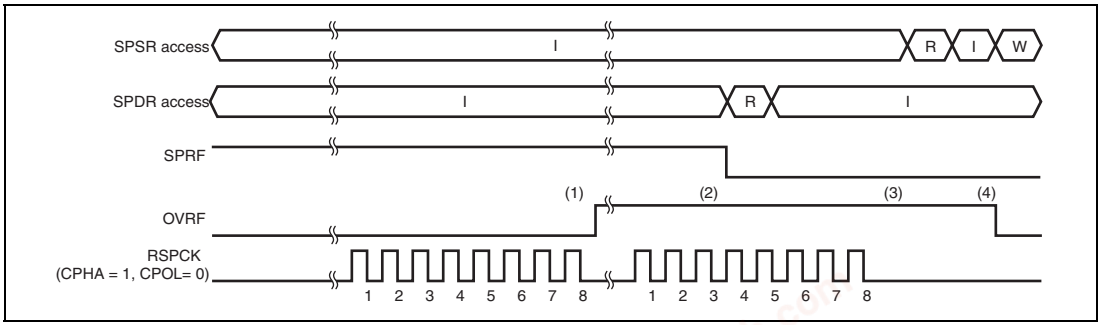

Figure 17.14 SPRF and OVRF Bit Operation Example

chanhvinh.com

The operation of the flags at the timing shown in steps (1) to (4) in the figure is described below.

1. If a serial transfer terminates when the receive buffer does not have a space for the receive data length, this module detects an overrun error, and sets the OVRF bit to 1. This module does not copy the data in the shift register to the receive buffer.
2. The OVFR bit is not cleared even when SPDR is read and thus the number of data bytes in the receive buffer becomes less than the number of the receive buffer data triggering number specified by the RXTRG bits.
3. If the serial transfer terminates in an overrun error state, this module determines that the shift register is empty; in this manner, data transfer is enabled from the transmit buffer to the shift register.
4. If 0 is written to the OVRF bit after SPSR is read with OVRF = 1, this module clears the OVRF bit.

The occurrence of an overrun can be checked either by reading SPSR or by using an error interrupt and reading SPSR. When using an error interrupt, set the SPEIE bit in the control register (SPCR) to 1. When executing a serial transfer without using an error interrupt, measures should be taken to ensure the early detection of overrun errors, such as reading SPSR immediately after SPDR is read.

The OVRF bit is cleared to 0 under the following conditions:

- After SPSR is read in a condition in which the OVRF bit is set to 1, 0 is written to the OVRF bit.
- Power-on reset

Note: When the receive buffer has area enough to store receive data with an overrun error, this module receives receive data.

chanhvinh.com

(2) Mode Fault Error

When the MSTR bit is 0, this module operates in slave mode. This module detects a mode fault error if the SSL input signal is negated during the serial transfer period (from the time the driving of valid data is started to the time the final valid data is fetched) when the MODFEN bit is 1 in slave mode.

Upon detecting a mode fault error, this module stops driving of the output signals and clears the SPE bit in SPCR to 0. When the SPE bit is cleared to 0, the function of this module is disabled and this module stops driving external signals. For details of disabling the function of this module by clearing the SPE bit to 0, see section 17.4.7, Initialization.

The occurrence of a mode fault error can be checked either by reading SPSR or by using an error interrupt and reading SPSR. When using an error interrupt, set the SPEIE bit in the control register (SPCR) to 1. To detect a mode fault error without using an error interrupt, it is necessary to poll SPSR.

When the MODF bit is 1, writing 1 to the SPE bit is ignored. To enable the function of this module after the detection of a mode fault error, the MODF bit must be set to 0. The MODF bit is cleared to 0 under the following conditions:

- After SPSR is read in a condition where the MODF bit has turned 1, 0 is written to the MODF bit.
- Power-on reset

chanhvinh.com

17.4.7 Initialization

If 0 is written to the SPE bit in the control register (SPCR) or this module clears the SPE bit to 0 because of the detection of a mode fault error, this module disables the module function, and initializes a part of the module function. When a power-on reset is generated, this module initializes all of the module function. An explanation of initialization by the clearing of the SPE bit follows.

(1) Initialization by Clearing SPE Bit

When the SPE bit in SPCR is cleared, this module performs the following initialization:

- Suspending any serial transfer that is being executed
- Stopping the driving of output signals (Hi-Z) in slave mode
- Initializing the internal state
- Initializing the TEND bit in SPSR

Initialization by the clearing of the SPE bit does not initialize the control bits of this module. For this reason, this module can be started in the same transfer mode as prior to the initialization if the SPE bit is re-set to 1.

chanhvinh.com

17.4.8 SPI Operation

(1) Multi-Master Mode Operation

This section explains the operation in multi-master mode.

(a) Starting Serial Transfer

A serial transfer is started when transmit data is copied from the transmit buffer to the shift register, the shift register becomes full, and the receive buffer has a space for the receive data length. If transmit data has already been written to the shift register, data is not copied from the transmit buffer to the shift register.

For details of the transfer format, see section 17.4.4, Transfer Format.

(b) Terminating Serial Transfer

Irrespective of the CPHA bit in the command register (SPCMD), this module terminates the serial transfer after transmitting an RSPCK edge corresponding to the final sampling timing. After the serial transfer is completed, receive data is copied from the shift register to the receive buffer. If the receive buffer does not have a space for the receive data length after receive data is copied from the shift register to the receive buffer, another serial transfer will not be performed. In order to perform another serial transfer, data for the receive data length should be read from the receive buffer to secure the space for the receive data.

It should be noted that the final sampling timing varies depending on the bit length of transfer data. In master mode, the data length depends on the settings in bits SPB3 to SPB0 in SPCMD. For details on the transfer format, see section 17.4.4, Transfer Format.

chanhvinh.com

(c) Sequence Control

The transfer format that is employed in master mode is determined by the sequence control register (SPSCR), command registers 0 to 3 (SPCMD0 to SPCMD3), the bit rate register (SPBR), the clock delay register (SPCKD), the slave select negation delay register (SSLND), and the next-access delay register (SPND).

SPSCR is a register used to determine the sequence configuration for serial transfers that are executed by this module in master mode. The following items are set in command registers SPCMD0 to SPCMD3: SSL output signal value, MSB/LSB first, data length, some of the bit rate settings, RSPCK polarity/phase, whether SPCKD is to be referenced, whether SSLND is to be referenced, and whether SPND is to be referenced. SPBR holds some of the bit rate settings; SPCKD, a clock delay value; SSLND, an SSL negation delay; and SPND, a next-access delay value.

According to the sequence length that is assigned to SPSCR, this module makes up a sequence comprised of a part or all of SPCMD0 to SPCMD3. This module contains a pointer to the SPCMD that makes up the sequence. The value of this pointer can be checked by reading bits SPCP1 and SPCP0 in the sequence status register (SPSSR). When the SPE bit in the control register (SPCR) is set to 1 and the function of this module is enabled, this module loads the pointer to the commands in SPCMD0, and incorporates the SPCMD0 settings into the transfer format at the beginning of serial transfer. This module increments the pointer each time the next-access delay period for a data transfer ends. Upon completion of the serial transfer that corresponds to the final command comprising the sequence, this module sets the pointer in SPCMD0, and in this manner the sequence is executed repeatedly.

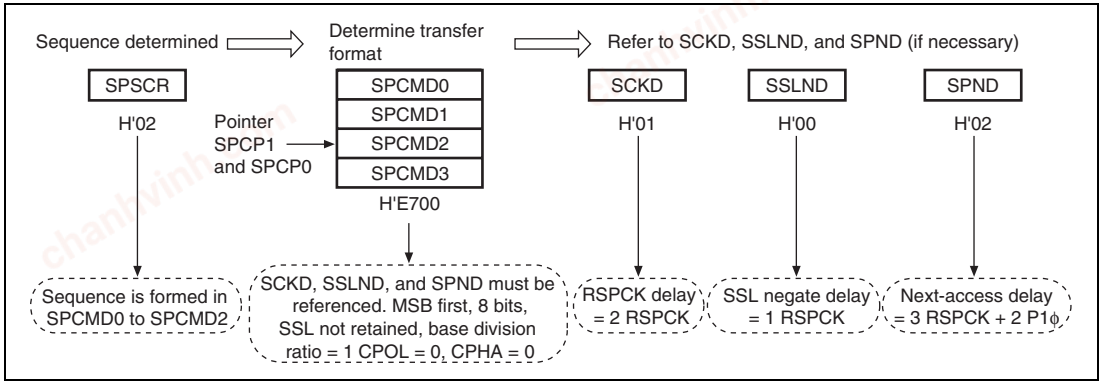

Figure 17.15 Determination Procedure of Serial Transfer Mode in Master Mode

chanhvinh.com

(d) Burst Transfer

If the SSLKP bit in the command register (SPCMD) that this module references during the current serial transfer is 1, this module keeps the SSL signal level during the serial transfer until the beginning of the SSL signal assertion for the next serial transfer. If the SSL signal level for the next serial transfer is the same as the SSL signal level for the current serial transfer, this module can execute continuous serial transfers while keeping the SSL signal assertion status (burst transfer).

Figure 17.16 shows an example of an SSL signal operation for the case where a burst transfer is implemented using SPCMD0 and SPCMD1 settings. The text below explains operations (1) to (7) as depicted in figure 17.16. It should be noted that the polarity of the SSL output signal depends on the settings in the slave select polarity register (SSLP).

1. Based on SPCMD0, this module asserts the SSL signal and inserts RSPCK delays.
2. Serial transfers are executed according to SPCMD0.
3. SSL negation delays are inserted.
4. Because the SSLKP bit in SPCMD0 is 1, this module keeps the SSL signal value on SPCMD0. This period is sustained, at the shortest, for a period equal to the next-access delay of SPCMD0. If the shift register is empty after the passage of a minimum period, this period is sustained until such time as the transmit data is stored in the shift register for another transfer.
5. Based on SPCMD1, this module asserts the SSL signal and inserts RSPCK delays.
6. Serial transfers are executed according to SPCMD1.
7. Because the SSLKP bit in SPCMD1 is 0, this module negates the SSL signal. In addition, a next-access delay is inserted according to SPCMD1.

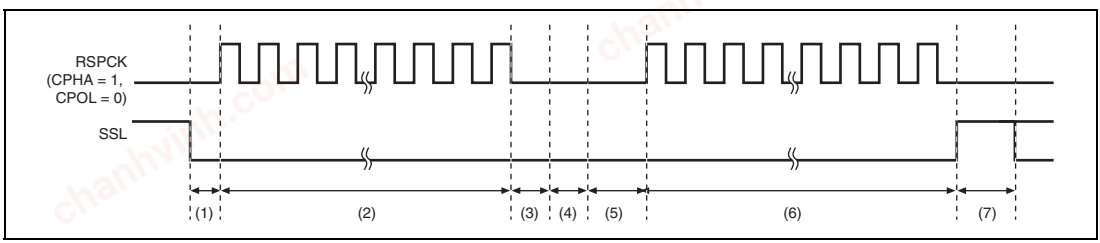

Figure 17.16 Example of Burst Transfer Operation using SSLKP Bit

chanhvinh.com

If the SSL signal settings in the SPCMD in which 1 is assigned to the SSLKP bit are different from the SSL signal output settings in the SPCMD to be used in the next transfer, this module switches the SSL signal status to SSL signal assertion ((5) in figure 17.16) corresponding to the command for the next transfer. Notice that if such an SSL signal switching occurs, the slaves that drive the MISO signal compete, and the possibility arises of the collision of signal levels.

This module in master mode references within the module the SSL signal operation for the case where the SSLKP bit is not used. Even when the CPHA bit in SPCMD is 0, this module can accurately start serial transfers by asserting the SSL signal for the next transfer. For this reason, burst transfers in master mode can be executed irrespective of CPHA bit settings (see section 17.4.8 (2), Slave Mode Operation).

(e) RSPCK Delay (t1)

The RSPCK delay value in master mode depends on SCKDEN bit settings in the command register (SPCMD) and on clock delay register (SPCKD) settings. This module determines the SPCMD to be referenced during serial transfer by pointer control, and determines an RSPCK delay value during serial transfer by using the SCKDEN bit in the selected SPCMD and SPCKD, as shown in table 17.8. For a definition of RSPCK delay, see section 17.4.4, Transfer Format.

Table 17.8 Relationship among SCKDEN and SPCKD Settings and RSPCK Delay Values

SCKDEN	SPCKD	RSPCK Delay Value
0	000 to 111	1 RSPCK
1	000	1 RSPCK
	001	2 RSPCK
	010	3 RSPCK
	011	4 RSPCK
	100	5 RSPCK
	101	6 RSPCK
	110	7 RSPCK
	111	8 RSPCK

chanhvinh.com

(f) SSL Negation Delay (t2)

The SSL negation delay value in master mode depends on SLNDEN bit settings in the command register (SPCMD) and on SSL negation delay register (SSLND) settings. This module determines the SPCMD to be referenced during serial transfer by pointer control, and determines an SSL negation delay value during serial transfer by using the SLNDEN bit in the selected SPCMD and SSLND, as shown in table 17.9. For a definition of SSL negation delay, see section 17.4.4, Transfer Format.

Table 17.9 Relationship among SLNDEN and SSLND Settings and SSL Negation Delay Values

SLNDEN	SSLND	SSL Negation Delay Value
0	000 to 111	1 RSPCK
1	000	1 RSPCK
	001	2 RSPCK
	010	3 RSPCK
	011	4 RSPCK
	100	5 RSPCK
	101	6 RSPCK
	110	7 RSPCK
	111	8 RSPCK

chanhvinh.com

(g) Next-Access Delay (t3)

The next-access delay value in master mode depends on SPNDEN bit settings in the command register (SPCMD) and on next-access delay register (SPND) settings. This module determines the SPCMD to be referenced during serial transfer by pointer control, and determines a next-access delay value during serial transfer by using the SPNDEN bit in the selected SPCMD and SPND, as shown in table 17.10. For a definition of next-access delay, see section 17.4.4, Transfer Format.

Table 17.10 Relationship among SPNDEN and SPND Settings and Next-Access Delay Values

SPNDEN	SPND	Next-Access Delay Value
0	000 to 111	1 RSPCK + 2 P1ϕ
1	000	1 RSPCK + 2 P1ϕ
	001	2 RSPCK + 2 P1ϕ
	010	3 RSPCK + 2 P1ϕ
	011	4 RSPCK + 2 P1ϕ
	100	5 RSPCK + 2 P1ϕ
	101	6 RSPCK + 2 P1ϕ
	110	7 RSPCK + 2 P1ϕ
	111	8 RSPCK + 2 P1ϕ

(h) Initialization Flowchart

Figure 17.17 is a flowchart illustrating an example of initialization in SPI operation when this module is used in master mode. For a description of how to set up the interrupt controller, direct memory access controller, and input/output ports, see the descriptions given in the individual blocks.

chanhvinh.com

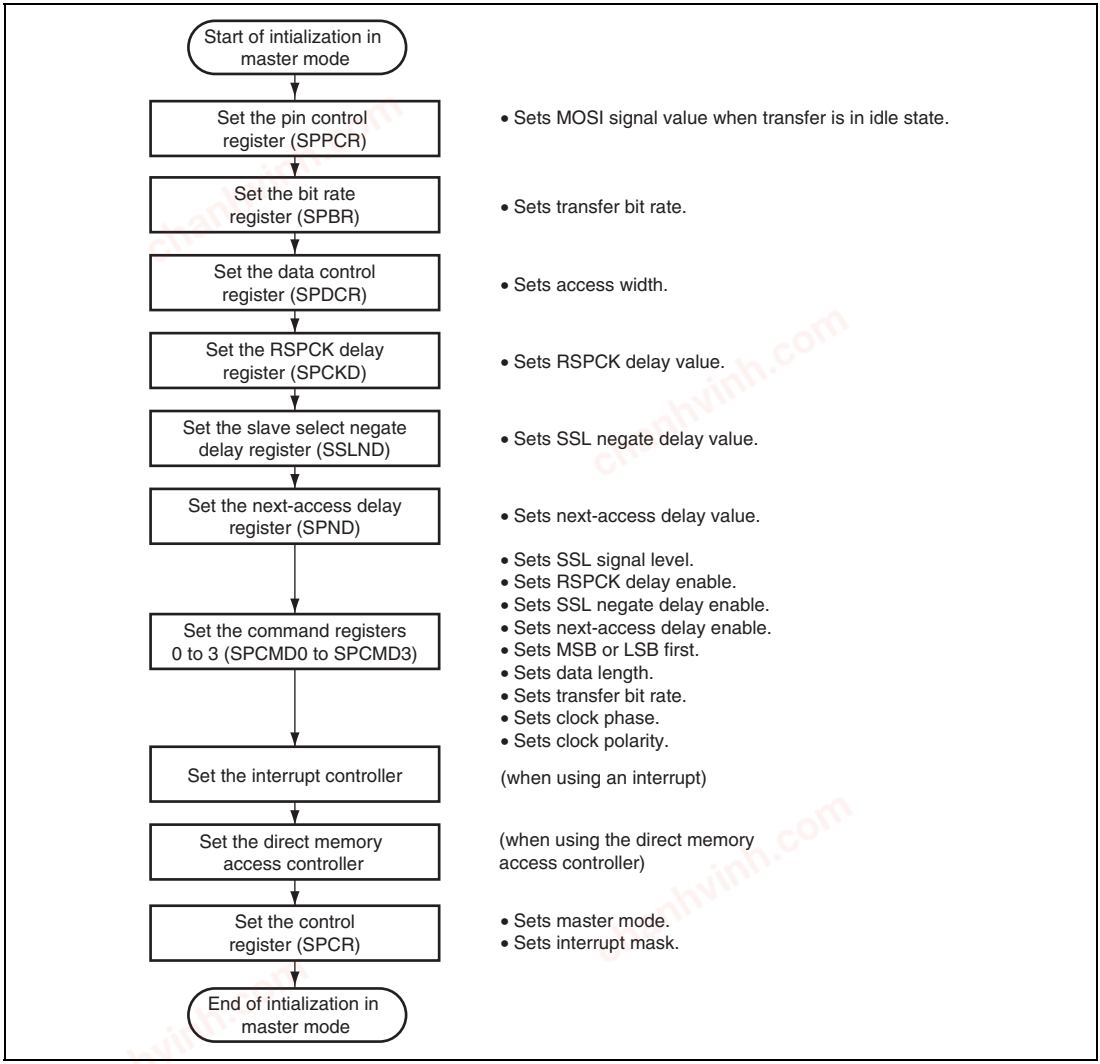

Figure 17.17 Example of Initialization Flowchart in Master Mode

chanhvinh.com

(i) Transfer Operation Flowchart

Figure 17.18 is a flowchart illustrating a transfer in SPI operation when this module is used in master mode.

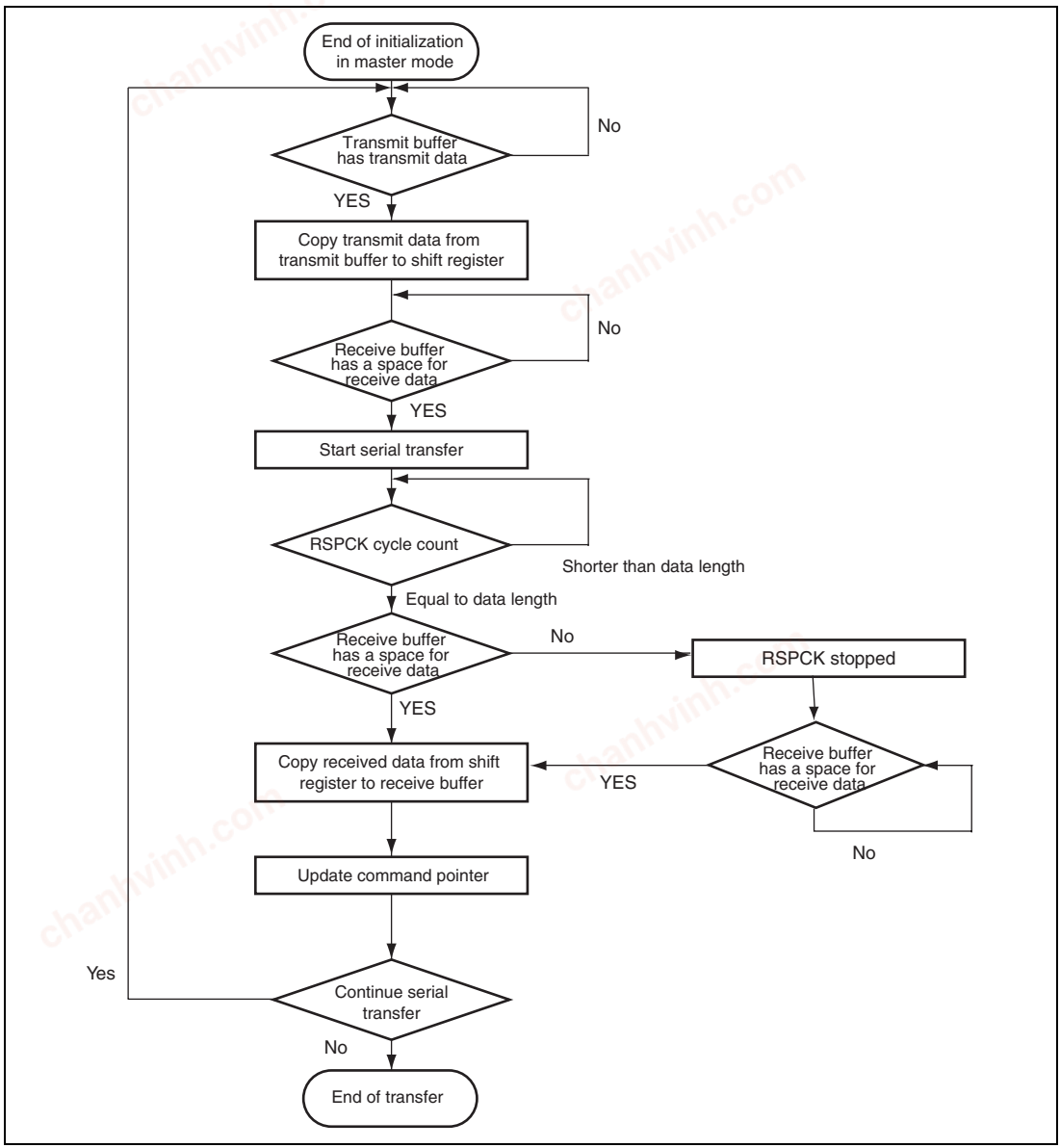

Figure 17.18 Transfer Operation Flowchart in Master Mode

chanhvinh.com

(2) Slave Mode Operation

(a) Starting Serial Transfer

If this module detects an SSL input signal assertion when the CPHA bit in the command register 0 (SPCMD0) is 0, this module is required to start driving valid data to the MISO output signal. For this reason, when the CPHA bit is 0, the asserting of the SSL input signal triggers the start of a serial transfer.

If this module detects the first RSPCK edge in an SSL signal asserted condition when the CPHA bit is 1, this module is required to start driving valid data to the MISO output signal. For this reason, when the CPHA bit is 1, the first RSPCK edge in an SSL signal asserted condition triggers the start of a serial transfer.

When detecting the start of a serial transfer in a condition in which the shift register is empty, this module changes the status of the shift register to "full", so that data cannot be copied from the transmit buffer to the shift register when serial transfer is in progress. If the shift register was full before the serial transfer started, this module leaves the status of the shift register intact, in the full state.

Irrespective of CPHA bit settings, this module starts driving MISO output signals at the SSL signal assertion timing. Whether the data output from this module is valid or invalid differs depending on CPHA bit settings.

For details on the transfer format, see section 17.4.4, Transfer Format. The polarity of the SSL input signal depends on the setting of the SSL0P bit in the slave select polarity register (SSLP).

chanhvinh.com

(b) Terminating Serial Transfer

Irrespective of the CPHA bit in the command register 0 (SPCMD0), this module terminates the serial transfer after detecting an RSPCK edge corresponding to the final sampling timing. When the receive buffer has an enough space for receive data, this module copies received data from the shift register to the receive buffer of the data register (SPDR) upon termination of the serial transfer. Irrespective of the value of the SPRF bit, this module changes the status of the shift register to "empty" upon termination of the serial transfer. If this module detects an SSL input signal negation from the beginning of serial transfer to the end of serial transfer, a mode fault error occurs (see section 17.4.6, Error Detection).

The final sampling timing changes depending on the bit length of the transfer data. In slave mode, the data length depends on the settings in bits SPB3 to SPB0 bits in SPCMD0. The polarity of the SSL input signal depends on the setting in the SSL0P bit in the slave select polarity register (SSLP). For details on the transfer format, see section 17.4.4, Transfer Format.

(c) Notes on Slave Operations

If the CPHA bit in the command register 0(SPCMD0) is 0, this module starts serial transfers when it detects the assertion edge for an SSL input signal. In the type of configuration shown in figure 17.4 as an example, if this module is used in single-slave mode, the SSL signal is always fixed at active state. Therefore, when the CPHA bit is set to 0, this module cannot correctly start a serial transfer. To correctly execute send/receive operation in a configuration in which the SSL input signal is fixed at active state, the CPHA bit should be set to 1. When it is necessary to set the CPHA bit to 0, the SSL input signal should not be fixed.

(d) Burst Transfer

If the CPHA bit in the command register 0 (SPCMD0) is 1, continuous serial transfer (burst transfer) can be executed while retaining the assertion state for the SSL input signal. If the CPHA bit is 1, the period from the first RSPCK edge to the sampling timing for the reception of the final bit in an SSL signal active state corresponds to a serial transfer period. Even when the SSL input signal remains at the active level, this module can accommodate burst transfers because it can detect the start of access.

If the CPHA bit is 0, for the reason given in section 17.4.8 (2) (c), Notes on Slave Operations, second and subsequent serial transfers during the burst transfer cannot be executed correctly.

chanhvinh.com

(e) Initialization Flowchart

Figure 17.19 is a flowchart illustrating an example of initialization in SPI operation when this module is used in slave mode. For a description of how to set up the interrupt controller, direct memory access controller, and input/output ports, see the descriptions given in the individual blocks.

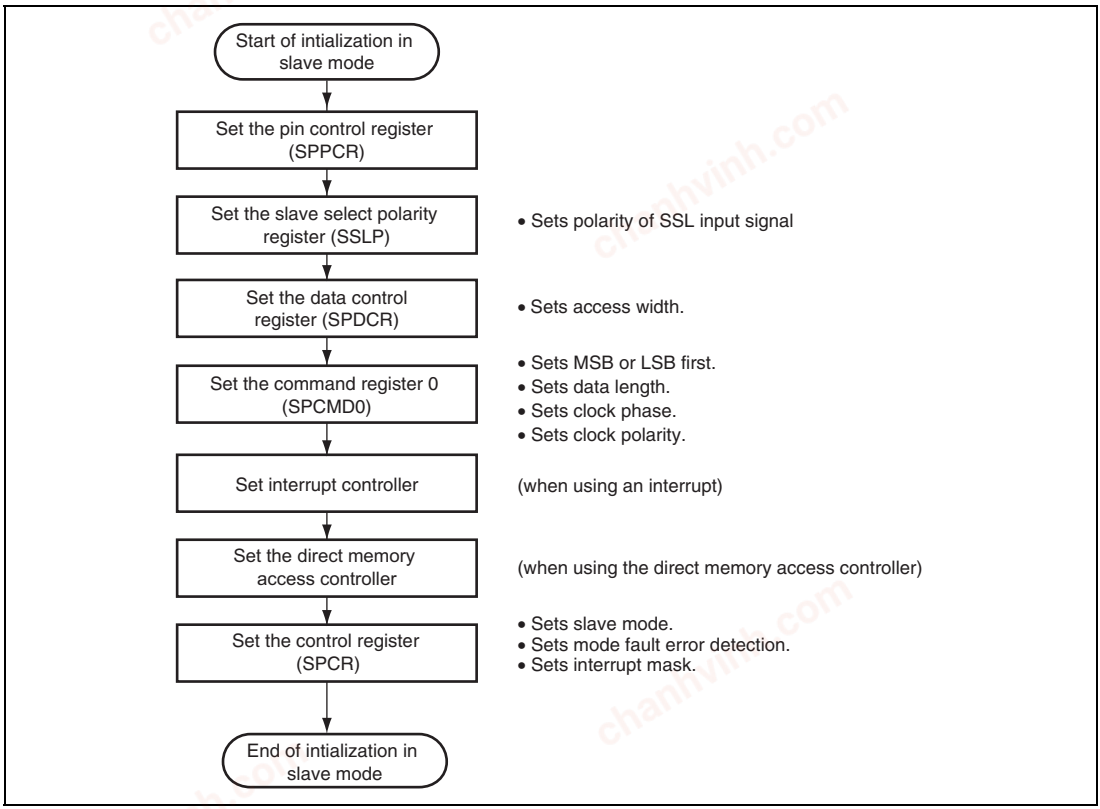

Figure 17.19 Example of Initialization Flowchart in Slave Mode

chanhvinh.com

(f) Transfer Operation Flowchart (CPHA = 0)

Figure 17.20 is a flowchart illustrating a transfer in SPI operation when this module is used in slave mode with the CPHA bit in the command register 0 (SPCMD0) set to 0.

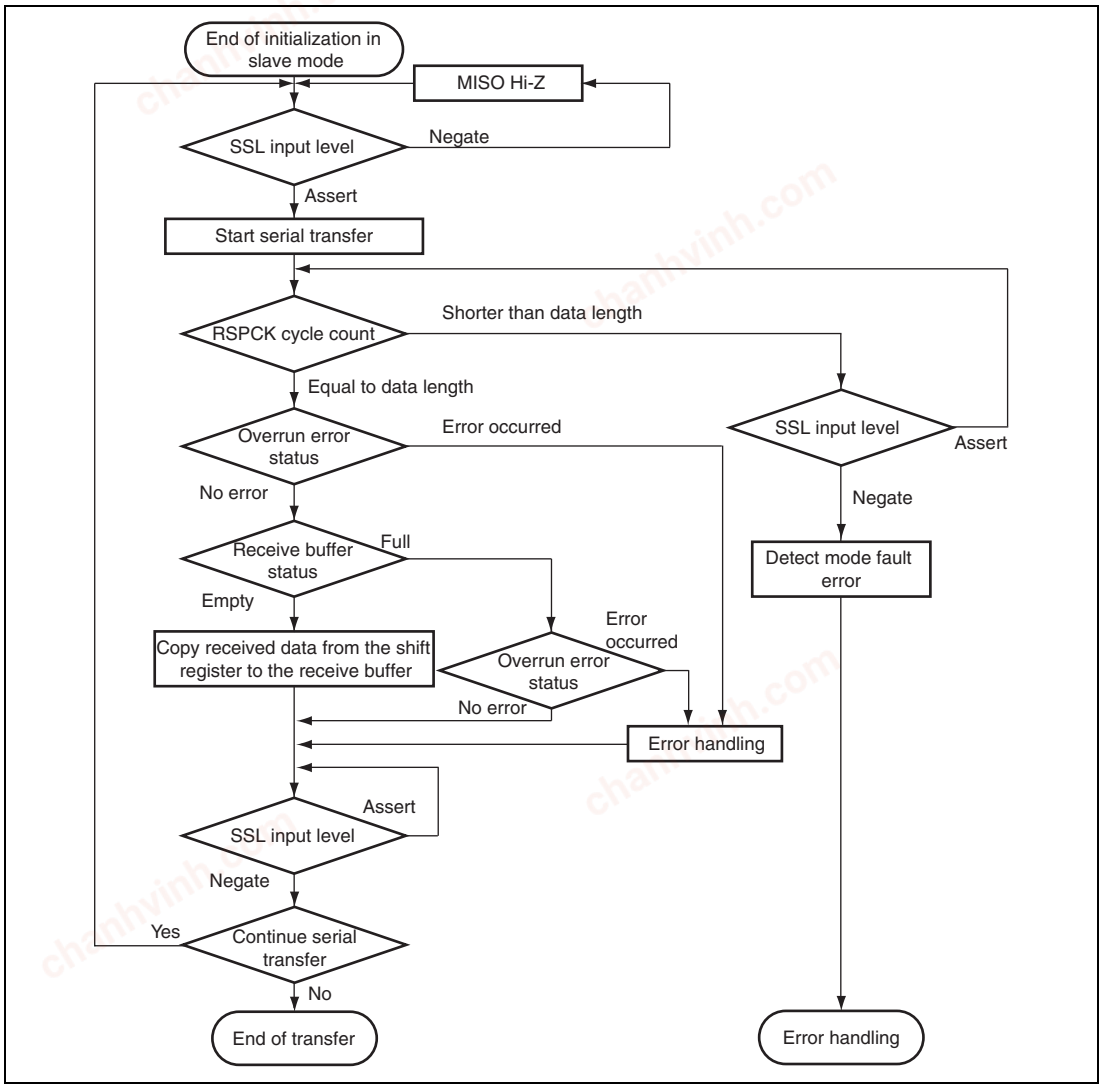

Figure 17.20 Transfer Operation Flowchart in Slave Mode (CPHA = 0)

chanhvinh.com

(g) Transfer Operation Flowchart (CPHA = 1)

Figure 17.21 is a flowchart illustrating a transfer in SPI operation when this module is used in slave mode with the CPHA bit in the command register 0 (SPCMD0) and the MODFEN bit in the control register (SPCR) set to 1, respectively. The subsequent operation is not guaranteed when the serial transfer is started with the MODFEN bit set to 0 and the SSL input level is negated with the number of RSPCK cycles shorter than the data length.

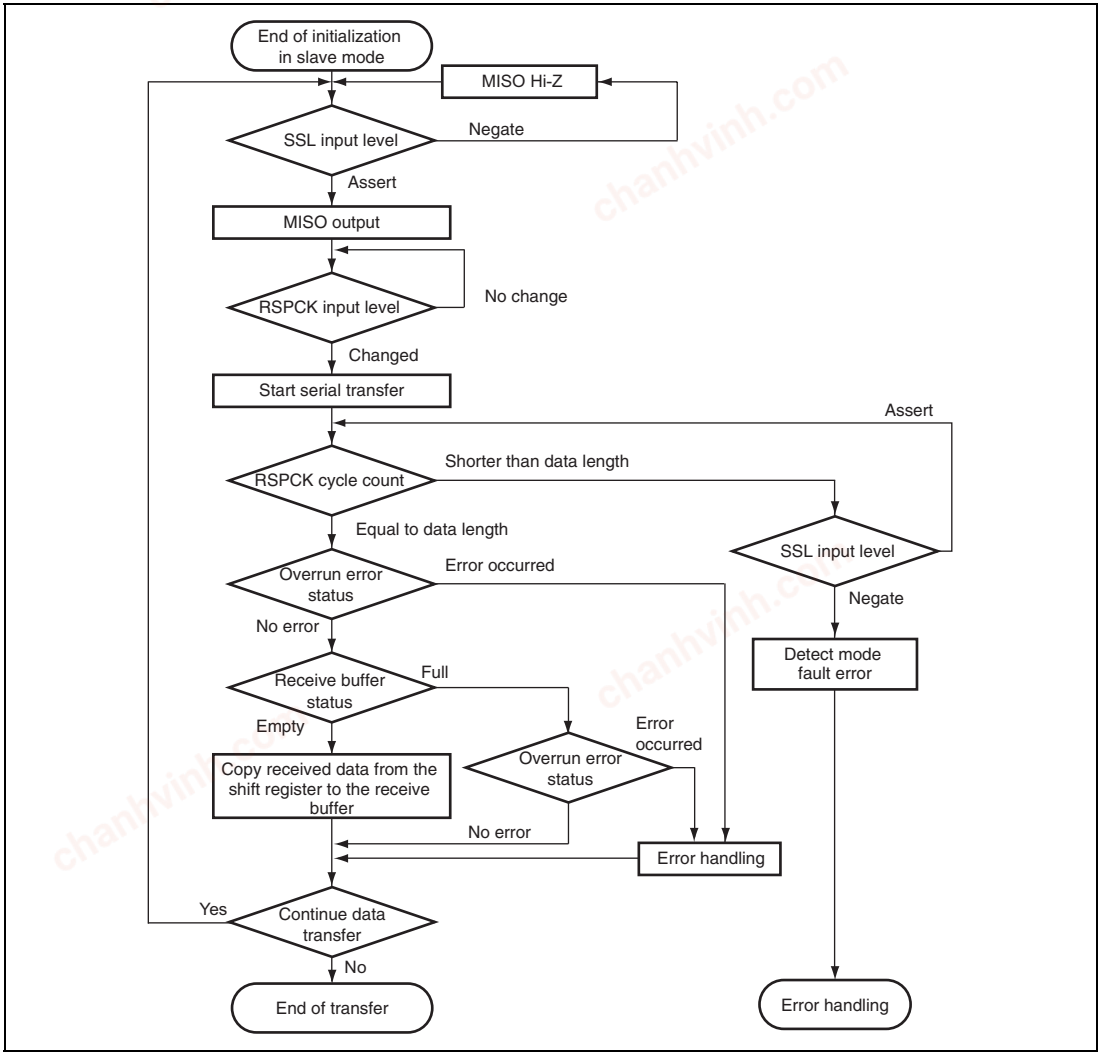

Figure 17.21 Transfer Operation Flowchart in Slave Mode (CPHA = 1)

chanhvinh.com

17.4.9 Error Handling

Figures 17.22 and 17.23 show the error handling. The following error handling is used to return from the error state after an error in master or slave mode.

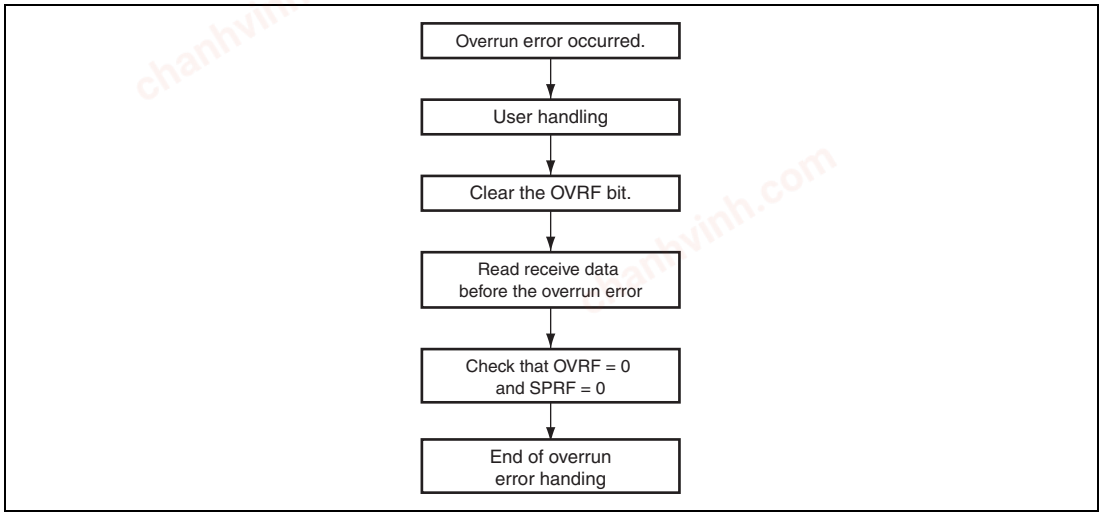

Figure 17.22 Error Handling (Overrun Error)

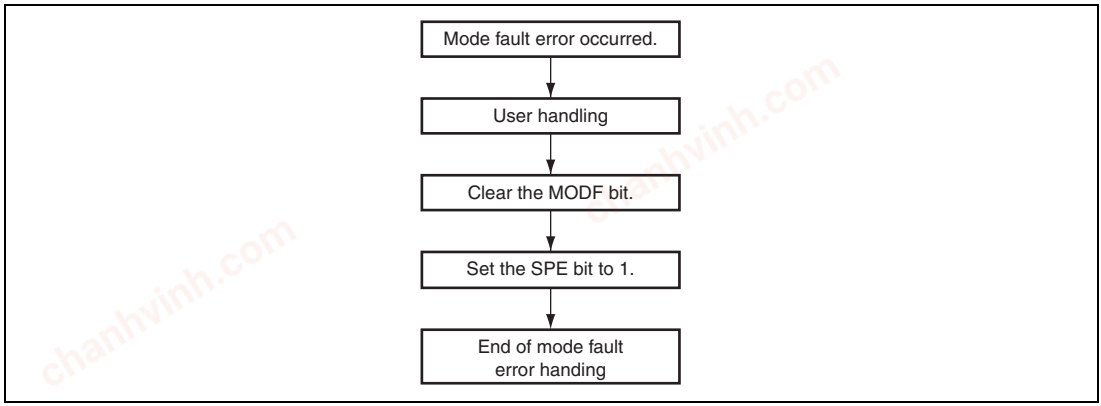

Figure 17.23 Error Handling (Mode Fault Error)

chanhvinh.com

17.4.10 Loopback Mode

When 1 is written to the SPLP bit in the pin control register (SPPCR), this module shuts off the path between the MISO pin and the shift register, and between the MOSI pin and the shift register, and connects the input path and the output path (reversed) of the shift register. This is called loopback mode. When a serial transfer is executed in loopback mode, the transmit data becomes the received data. Figure 17.24 shows the configuration of the shift register input/output paths for the case where this module in master mode is set in loopback mode.

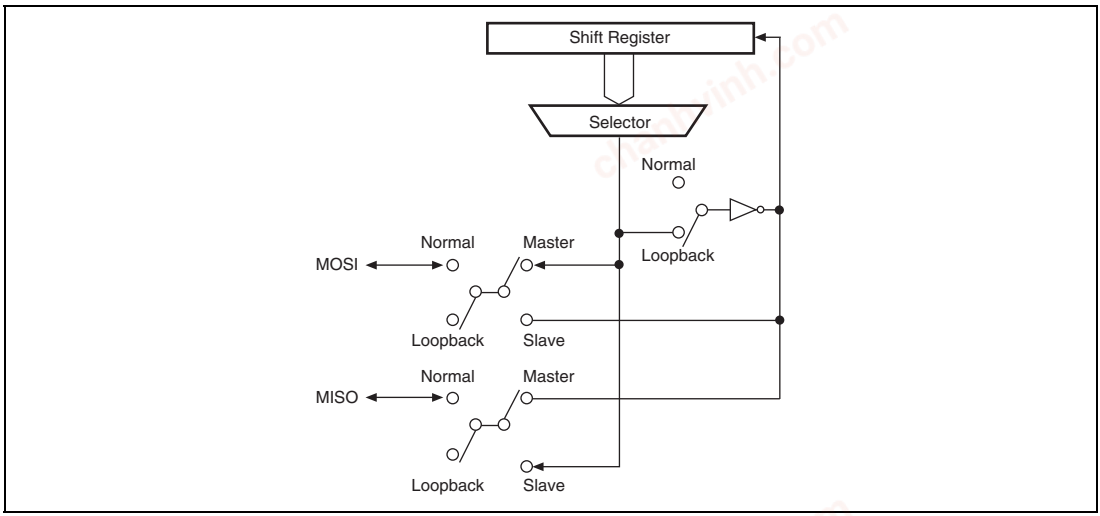

Figure 17.24 Configuration of Shift Register Input/Output Paths in Loopback Mode (Master Mode)

chanhvinh.com

17.4.11 Interrupt Sources

This module has interrupt sources of receive buffer full, transmit buffer empty, mode fault, and overrun. In addition, the direct memory access controller can be activated by the receive buffer full or transmit buffer empty interrupt for data transfer.

Table 17.11 shows the interrupt sources.

When any of the interrupt conditions in table 17.11 is met, an interrupt is generated. The interrupt sources should be cleared with data transfer by the CPU or direct memory access controller.

Table 17.11 Interrupt Sources

Name	Interrupt Source	Abbreviation	Interrupt Condition	Activation of Direct Memory Access Controller
SPRI	Receive buffer full	RXI	(SPRIE = 1) • (SPRF = 1)	Possible
SPTI	Transmit buffer empty	TXI	(SPTIE = 1) • (SPTEF = 1)	Possible
SPEI	Mode fault	MOI	(SPEIE = 1) • (MODF = 1)	—
	Overrun	OVI	(SPEIE = 1) • (OVRF = 1)	—

chanhvinh.com

chanhvinh.com
chanhvinh.com
chanhvinh.com

chanhvinh.com

Section 18 Renesas Quad Serial Peripheral Interface

This LSI includes two-channel Renesas quad serial peripheral interfaces.

18.1 Features

This module has the following features.

- Capable of communications to the serial flash memory through single-/dual-/quad-SPI operation

  Single-SPI operation

  Use of MO (master out), MI (master in), QSSL (slave select), and QSPCLK (SPI clock) signals allow for communications to the serial flash memory through SPI operation (four-wire method).

  QMO output pin and QMI input pin

  QSSL and QSPCLK serve as output pins.

  Dual-SPI operation

  Use of QIO1, QIO0, QSSL, and QSPCLK signals allow for serial communications through SPI operation (four-wire method).

  Bidirectional QIO1 and QIO0 pins

  QSSL and QSPCLK serve as output pins.

  Quad-SPI operation

  Use of QIO3 to QIO0, QSSL, and QSPCLK signals allow for serial communications through SPI operation (six-wire method).

  Bidirectional QIO3 to QIO0 pins

  QSSL and QSPCLK serve as output pins
- Transfer data length

  Transfer data length is selectable from 8 bits to 128 Gbits

  Data is continuously transferred one through 4,294,967,296 times in 8-, 16-, or 32-bit units
- Bit rate

  QSPCLK can be divided by a maximum of 4080 (divide 2 or more in transmission)

  QSPCLK can be generated by dividing P1ϕ by the on-chip baud rate generator.

chanhvinh.com

- Buffer configuration
  8 bits × 32 buffers for transmission and 8 bits × 32 buffers for reception
- Shift registers
  32 bits each for transmission and reception
- QSSL control function
  Controllable delay from QSSL output assertion to QSPCLK operation (clock delay)
  Range: 0 and 1.5 to 8.5 QSPCLK cycles (set in QSPCLK-cycle units)
  Controllable delay from QSPCLK stoppage to QSSL output negation (QSSL negation delay)
  Range: 0 to 8 QSPCLK cycles (set in QSPCLK-cycle units)
  Controllable wait for next-access QSSL output assertion (next-access delay)
  Range: 0 to 8 QSPCLK cycles (set in QSPCLK-cycle units)
  Capable of holding QSSL output value from transfer end to next access
  Function for changing QSSL polarity
- Transfer control
  A transfer of up to four commands can be executed sequentially in looped execution.
  Single-SPI or dual-/quad-SPI write operation: A transfer can be started when data is written to the transmit buffer while the SPI function is enabled.
  Dual-/quad-SPI read operation: A transfer can be started when the SPI function is enabled while there is enough space for receiving the specified length of data in the receive buffer.
  QIO3 to QIO0 and QMO output values can be specified during QSSL negation
  QIO3 and QIO2 output values can be specified in single-/dual-SPI modes
- Interrupt sources
  Maskable interrupt sources:
  Receive buffer full interrupt
  Transmit buffer empty interrupt
- Others
  Provides loop back mode
  Provides a function for initializing this module

chanhvinh.com

18.2 Input/Output Pins

Table 18.1 shows the pin configuration.

Table 18.1 Pin Configuration

Channel	Pin Name	Pin Name	I/O	Function
0	Clock pin	QSPCLK_0	O	Clock output
	Master transmit data/data 0 pin*[2]	QMO_0/ QIO0_0	I/O	Master transmit data/data 0
	Master input data/data 1 pin*[2]	QMI_0/ QIO1_0	I/O	Master input data/data 1
	Data 2 pin*[3]	QIO2_0	I/O	Data 2
	Data 3 pin*[3]	QIO3_0	I/O	Data 3
	Slave select pin	QSSL_0	O	Slave selection
1	Clock pin	QSPCLK_1	O	Clock output
	Master transmit data/data 0 pin*[2]	QMO_1/ QIO0_1	I/O	Master transmit data/data 0
	Master input data/data 1 pin*[2]	QMI_1/ QIO1_1	I/O	Master input data/data 1
	Data 2 pin*[3]	QIO2_1	I/O	Data 2
	Data 3 pin*[3]	QIO3_1	I/O	Data 3
	Slave select pin	QSSL_1	O	Slave selection

Notes: 1. In the description of the pins, the channel is omitted and pin names are described as QSPCLK, QMO/QIO0, QMI/QIO1, QIO2, QIO3, and QSSL.
2. In single-SPI mode, QMO and QMI are enabled; QIO0 and QIO1 in dual-/quad-SPI modes.
3. In single-/dual-SPI modes, fixed value according to register setting is output; QIO2 and QIO3 in quad-SPI mode.

chanhvinh.com

18.3 Register Descriptions

Table 18.2 shows the register configuration.

Table 18.2 Register Configuration

Channel	Register Name	Abbreviation	R/W	Initial Value	Address	Access Size
0	Control register_0	SPCR_0	R/W	H'00	H'E8033800	8, 16, 32
	Slave select polarity register_0	SSLP_0	R/W	H'00	H'E8033801	8, 16, 32
	Pin control register_0	SPPCR_0	R/W	H'06	H'E8033802	8, 16, 32
	Status register_0	SPSR_0	R	H'60	H'E8033803	8, 16, 32
	Data register_0	SPDR_0	R/W	Undefined	H'E8033804	8, 16, 32
	Sequence control register_0	SPSCR_0	R/W	H'00	H'E8033808	8, 16, 32
	Sequence status register_0	SPSSR_0	R	H'00	H'E8033809	8, 16, 32
	Bit rate register_0	SPBR_0	R/W	H'FF	H'E803380A	8, 16, 32
	Data control register_0	SPDCR_0	R/W	H'00	H'E803380B	8, 16, 32
	Clock delay register_0	SPCKD_0	R/W	H'00	H'E803380C	8, 16, 32
	Slave select negation delay register_0	SSLND_0	R/W	H'00	H'E803380D	8, 16, 32
	Next-access delay register_0	SPND_0	R/W	H'00	H'E803380E	8, 16, 32
	Command register 0_0	SPCMD0_0	R/W	H'E001	H'E8033810	16, 32
	Command register 1_0	SPCMD1_0	R/W	H'E001	H'E8033812	16, 32
	Command register 2_0	SPCMD2_0	R/W	H'E001	H'E8033814	16, 32
	Command register 3_0	SPCMD3_0	R/W	H'E001	H'E8033816	16, 32
	Buffer control register_0	SPBFCR_0	R/W	H'00	H'E8033818	8, 16, 32
	Buffer data count register_0	SPBDCR_0	R	H'0000	H'E803381A	16, 32
	Transfer data length multiplier setting register 0_0	SPBMUL0_0	R/W	H'00000001	H'E803381C	32

chanhvinh.com

Channel	Register Name	Abbreviation	R/W	Initial Value	Address	Access Size
0	Transfer data length multiplier setting register 1_0	SPBMUL1_0	R/W	H'00000001	H'E8033820	32
	Transfer data length multiplier setting register 2_0	SPBMUL2_0	R/W	H'00000001	H'E8033824	32
	Transfer data length multiplier setting register 3_0	SPBMUL3_0	R/W	H'00000001	H'E8033828	32
1	Control register_1	SPCR_1	R/W	H'00	H'E8034000	8, 16, 32
	Slave select polarity register_1	SSLP_1	R/W	H'00	H'E8034001	8, 16, 32
	Pin control register_1	SPPCR_1	R/W	H'06	H'E8034002	8, 16, 32
	Status register_1	SPSR_1	R	H'60	H'E8034003	8, 16, 32
	Data register_1	SPDR_1	R/W	Undefined	H'E8034004	8, 16, 32
	Sequence control register_1	SPSCR_1	R/W	H'00	H'E8034008	8, 16, 32
	Sequence status register_1	SPSSR_1	R	H'00	H'E8034009	8, 16, 32
	Bit rate register_1	SPBR_1	R/W	H'FF	H'E803400A	8, 16, 32
	Data control register_1	SPDCR_1	R/W	H'00	H'E803400B	8, 16, 32
	Clock delay register_1	SPCKD_1	R/W	H'00	H'E803400C	8, 16, 32
	Slave select negation delay register_1	SSLND_1	R/W	H'00	H'E803400D	8, 16, 32
	Next-access delay register_1	SPND_1	R/W	H'00	H'E803400E	8, 16, 32
	Command register 0_1	SPCMD0_1	R/W	H'E001	H'E8034010	16, 32
	Command register 1_1	SPCMD1_1	R/W	H'E001	H'E8034012	16, 32
	Command register 2_1	SPCMD2_1	R/W	H'E001	H'E8034014	16, 32
	Command register 3_1	SPCMD3_1	R/W	H'E001	H'E8034016	16, 32
	Buffer control register_1	SPBFCR_1	R/W	H'00	H'E8034018	8, 16, 32
	Buffer data count register_1	SPBDCR_1	R	H'0000	H'E803401A	16, 32

chanhvinh.com

Channel	Register Name	Abbreviation	R/W	Initial Value	Address	Access Size
1	Transfer data length multiplier setting register 0_1	SPBMUL0_1	R/W	H'00000001	H'E803401C	32
	Transfer data length multiplier setting register 1_1	SPBMUL1_1	R/W	H'00000001	H'E8034020	32
	Transfer data length multiplier setting register 2_1	SPBMUL2_1	R/W	H'00000001	H'E8034024	32
	Transfer data length multiplier setting register 3_1	SPBMUL3_1	R/W	H'00000001	H'E8034028	32

Note: In the description of the register names, the channel is omitted.

chanhvinh.com

18.3.1 Control Register (SPCR)

SPCR sets the operating mode.

Bit:	7	6	5	4	3	2	1	0
	SPRIE	SPE	SPTIE	—	—	—	—	—
Initial Value:	0	0	0	0	0	0	0	0
R/W:	R/W	R/W	R/W	R	R/W	R	R	R

Bit	Bit Name	Initial Value	R/W	Description
7	SPRIE	0	R/W	Receive Interrupt Enable Enables or disables generation of receive interrupt requests when the number of receive data units in the receive buffer is equal to or greater than the specified receive buffer data triggering number and the receive buffer full flag (SPRFF) in the status register (SPSR) is set to 1. 0: Disables the generation of receive interrupt requests. 1: Enables the generation of receive interrupt requests.
6	SPE	0	R/W	SPI Function Enable Setting this bit to 1 enables the SPI module function. Setting this bit to 0 initializes a part of the module function. 0: Disables the module function 1: Enables the module function
5	SPTIE	0	R/W	Transmit Interrupt Enable Enables or disables generation of transmit interrupt requests when the number of transmit data units in the transmit buffer is equal to or less than the specified transmit buffer data triggering number and the transmit buffer empty flag (SPTEF) in SPSR is set to 1. 0: Disables the generation of transmit interrupt requests. 1: Enables the generation of transmit interrupt requests.
4	—	0	R	Reserved This bit is always read as 0. The write value should always be 0.
3	—	0	R/W	Reserved The write value should always be 1. Otherwise, operation cannot be guaranteed.

chanhvinh.com

Bit	Bit Name	Initial Value	R/W	Description
2 to 0	—	All 0	R	Reserved These bits are always read as 0. The write value should always be 0.

18.3.2 Slave Select Polarity Register (SSLP)

SSLP sets the polarity of the QSSL signal. If the contents of SSLP are modified while the SPE bit in the control register (SPCR) is set to 1, the subsequent operation cannot be guaranteed.

Bit:	7	6	5	4	3	2	1	0
	—	—	—	—	—	—	—	SSLP
Initial Value:	0	0	0	0	0	0	0	0
R/W:	R	R	R	R	R	R	R	R/W

Bit	Bit Name	Initial Value	R/W	Description
7 to 1	—	All 0	R	Reserved These bits are always read as 0. The write value should always be 0.
0	SSLP	0	R/W	QSSL Signal Polarity Setting Sets the polarity of the QSSL signal. 0: QSSL signal low-active 1: QSSL signal high-active

chanhvinh.com

18.3.3 Pin Control Register (SPPCR)

SPPCR sets the modes of the pins. If the contents of SPPCR are modified while the SPE bit in SPCR is set to 1, the subsequent operation cannot be guaranteed.

Bit:	7	6	5	4	3	2	1	0
	—	—	MOIFE	MOIFV	—	IO3FV	IO2FV	SPLP
Initial Value:	0	0	0	0	0	1	1	0
R/W:	R	R	R/W	R/W	R	R/W	R/W	R/W

Bit	Bit Name	Initial Value	R/W	Description
7, 6	—	All 0	R	Reserved These bits are always read as 0. The write value should always be 0.
5	MOIFE	0	R/W	Data Output Idle Value Fixing Enable Fixes the pin output value in a QSSL negation period or the QSSL keeping period during a burst transfer. In single-SPI mode, this bit setting applies to QMO. In dual-SPI mode, this bit setting applies to QIO1 and QIO0. In quad-SPI mode, this bit setting applies to QIO3 to QIO0. 0: Output value equals final data from previous transfer 1: Output value equals the value set in the MOIFV bit Note: In dual-/quad-SPI modes, QIO1 and QIO0/QIO3 to QIO0 are driven to the Hi-Z state regardless of this bit setting (see section 18.4.2, Pin Control).
4	MOIFV	0	R/W	Data Output Idle Fixed Value If the data output idle value fixing enable bit (MOIFE) is 1, this module, according to data output idle fixed value (MOIFV) bit settings, determines the output value during the QSSL negation period. 0: Output pin idle fixed value equals 0 1: Output pin idle fixed value equals 1
3	—	0	R	Reserved This bit is always read as 0. The write value should always be 0.

chanhvinh.com

Bit	Bit Name	Initial Value	R/W	Description
2	IO3FV	1	R/W	Single-/Dual-SPI Mode QIO3 Output Fixed Value Fixes the output direction of the QIO3 pin in single-/dual-SPI modes. This bit is valid only in single-/dual-SPI modes, and is not affected by the MOIFE or MOIFV bit values. 0: QIO3 output fixed value equals 0 1: QIO3 output fixed value equals 1
1	IO2FV	1	R/W	Single-/Dual-SPI Mode QIO2 Output Fixed Value Fixes the output direction of the QIO2 pin in single-/dual-SPI modes. This bit is valid only in single-/dual-SPI modes, and is not affected by the MOIFE or MOIFV bit values. 0: QIO2 output fixed value equals 0 1: QIO2 output fixed value equals 1
0	SPLP	0	R/W	Loopback Mode When the SPLP bit is set to 1, this module shuts off the path between the data I/O pin and the transmit/receive shift register, and connects the input path and the output path for the transmit/receive shift register. 0: Normal mode 1: Loopback mode Note: When the loopback mode is specified in dual-/quad-SPI modes, the SPI read/write access setting bit (SPRW) in command registers 0 to 3 (SPCMD0 to SPCMD3) should be set to 0 (write operation).

chanhvinh.com

18.3.4 Status Register (SPSR)

SPSR indicates the operating status.

Bit:	7	6	5	4	3	2	1	0
	SPRFF	TEND	SPTEF	—	—	—	—	—
Initial Value:	0	1	1	0	0	0	0	0
R/W:	R	R	R	R	R	R	R	R

Bit	Bit Name	Initial Value	R/W	Description
7	SPRFF	0	R	Receive Buffer Full Flag Indicates that the number of receive data units in the receive buffer is equal to or greater than the receive buffer data triggering number specified in the buffer control register. 0: The number of receive data units in the receive buffer is less than the receive buffer data triggering number. 1: The number of receive data units in the receive buffer is equal to or greater than the receive buffer data triggering number. [Clearing conditions] • The receive buffer data is read until the number of data units in the receive buffer becomes less than the specified receive buffer data triggering number. • Receive buffer data reset is enabled. • Power-on reset [Setting condition] • The number of data units in the receive buffer is equal to or greater than the specified receive buffer data triggering number.

chanhvinh.com

Bit	Bit Name	Initial Value	R/W	Description
6	TEND	1	R	Transmit End Flag This bit is set to 1 when transmission is completed, and this bit is 0 when transmission is not completed. [Clearing conditions] • When transmit data are moved from the transmit register to the transmit shift register. • When data reception is started in dual-/quad-SPI modes. [Setting condition] • When the number of data units in the transmit buffer is zero when a serial transfer is completed (except when the dummy transmission enable bit (TXDMY) is set to 1). • When there is not enough space for receiving the specified length of data in the receive buffer when a serial transfer is completed.

chanhvinh.com

Bit	Bit Name	Initial Value	R/W	Description
5	SPTEF	1	R	Transmit Buffer Empty Flag Indicates that the number of transmit data units in the transmit buffer is equal to or less than the transmit buffer data triggering number specified in the buffer control register. 0: The number of transmit data units in the transmit buffer exceeds the specified transmit buffer data triggering number. 1: The number of transmit data units in the transmit buffer is equal to or less than the specified transmit buffer data triggering number. [Clearing condition] • When data is written to the transmit buffer until the number of transmit data units in the transmit buffer exceeds the specified transmit buffer data triggering number. [Setting conditions] • When the number of transmit data units in the transmit buffer is equal to or less than the specified transmit buffer data triggering number. • When transmit buffer data reset is enabled. • Power-on reset
4 to 0	—	All 0	R	Reserved These bits are always read as 0. The write value should always be 0.

chanhvinh.com

18.3.5 Data Register (SPDR)

SPDR accesses transmit/receive data buffer.

The transmit buffer (SPTXB) and receive buffer (SPRXB) are independent and are mapped to SPDR.

When data is written to SPDR, the data will be written to the transmit buffer.

When data is read from SPDR, the data will be read from the receive buffer.

SPDR should be read or written to in byte, word, or longword units.

When SPDR is read or written to with the longword-, word-, or byte-access width, the receive or transmit data should be read from or written to the following bits.

Longword: Bits 31 to 0

Word: Bits 31 to 16

Byte: Bits 31 to 24

Bit:	31	30	29	28	27	26	25	24	23	22	21	20	19	18	17	16
	SPD31	SPD30	SPD29	SPD28	SPD27	SPD26	SPD25	SPD24	SPD23	SPD22	SPD21	SPD20	SPD19	SPD18	SPD17	SPD16
Initial Value:	Undefined	Undefined	Undefined	Undefined	Undefined	Undefined	Undefined	Undefined	Undefined	Undefined	Undefined	Undefined	Undefined	Undefined	Undefined	Undefined
R/W:	R/W	R/W	R/W	R/W	R/W	R/W	R/W	R/W	R/W	R/W	R/W	R/W	R/W	R/W	R/W	R/W

Bit:	15	14	13	12	11	10	9	8	7	6	5	4	3	2	1	0
	SPD15	SPD14	SPD13	SPD12	SPD11	SPD10	SPD9	SPD8	SPD7	SPD6	SPD5	SPD4	SPD3	SPD2	SPD1	SPD0
Initial Value:	Undefined	Undefined	Undefined	Undefined	Undefined	Undefined	Undefined	Undefined	Undefined	Undefined	Undefined	Undefined	Undefined	Undefined	Undefined	Undefined
R/W:	R/W	R/W	R/W	R/W	R/W	R/W	R/W	R/W	R/W	R/W	R/W	R/W	R/W	R/W	R/W	R/W

chanhvinh.com

18.3.6 Sequence Control Register (SPSCR)

SPSCR sets the sequence controlled method. If the contents of SPSCR are modified while the SPE bit in SPCR is 1, the subsequent operation cannot be guaranteed.

Bit:	7	6	5	4	3	2	1	0
	—	—	—	—	—	—	SPSC1	SPSC0
Initial Value:	0	0	0	0	0	0	0	0
R/W:	R	R	R	R	R	R	R/W	R/W

Bit	Bit Name	Initial Value	R/W	Description
7 to 2	—	All 0	R	Reserved These bits are always read as 0. The write value should always be 0.
1	SPSC1	0	R/W	Sequence Control Specification
0	SPSC0	0	R/W	These bits specify sequential operations. This module references SPCMD0 to SPCMD3 in the order according to these bit settings. 00: 0 → 0 → … 01: 0 → 1 → 0 → … 10: 0 → 1 → 2 → 0 → … 11: 0 → 1 → 2 → 3 → 0 → …

chanhvinh.com

18.3.7 Sequence Status Register (SPSSR)

SPSSR indicates the sequence control status.

Bit:	7	6	5	4	3	2	1	0
	—	—	—	—	—	—	SPSS1	SPSS0
Initial Value:	0	0	0	0	0	0	0	0
R/W:	R	R	R	R	R	R	R	R

Bit	Bit Name	Initial Value	R/W	Description
7 to 2	—	All 0	R	Reserved These bits are always read as 0. The write value should always be 0.
1	SPSS1	0	R	Sequence Status
0	SPSS0	0	R	During sequence control, these bits indicate one of SPCMD0 to SPCMD3 that is currently referenced. 00: SPCMD0 01: SPCMD1 10: SPCMD2 11: SPCMD3

chanhvinh.com

18.3.8 Bit Rate Register (SPBR)

SPBR sets the bit rate. If the contents of SPBR are modified while the SPE bit in SPCR is 1, the subsequent operation cannot be guaranteed.

Bit:	7	6	5	4	3	2	1	0
	SPBR7	SPBR6	SPBR5	SPBR4	SPBR3	SPBR2	SPBR1	SPBR0
Initial Value:	1	1	1	1	1	1	1	1
R/W:	R/W	R/W	R/W	R/W	R/W	R/W	R/W	R/W

The bit rate is determined by combinations of SPBR settings and the bit settings in the bit rate division setting bits (BRDV1 and BRDV0) in SPCMD0 to SPCMD3.

When SPBR is set to 0, the base bit rate is selected.

The equation for calculating the bit rate when SPBR is not 0 is given below. In the equation, n denotes an SPBR setting (1, …, 255), and N denotes bit settings in the bits BRDV1 and BRDV0 (0, 1, 2, 3).

$$\text{Bit rate} = \frac{f(P1\phi)}{2 \times n \times 2^{N}}$$

chanhvinh.com

Table 18.3 shows examples of the relationship between SPBR and BRDV1 and BRDV0 bit settings.

Table 18.3 Relationship between SPBR and BRDV1 and BRDV0 Settings

			Bit Rate	
SPBR (n)	**BRDV[1:0] (N)**	**Division Ratio**	**P1ϕ = 50 MHz**	**P1ϕ = 66.67 MHz**
0	0	1	50.0 Mbps	66.67 Mbps
1	0	2	25.0 Mbps	33.33 Mbps
2	0	4	12.50 Mbps	16.67 Mbps
3	0	6	8.33 Mbps	11.11 Mbps
4	0	8	6.25 Mbps	8.33 Mbps
5	0	10	5.00 Mbps	6.67 Mbps
6	0	12	4.16 Mbps	5.56 Mbps
6	1	24	2.08 Mbps	2.78 Mbps
6	2	48	1.04 Mbps	1.39 Mbps
6	3	96	520 kbps	694.48 kbps
255	3	4080	12.25 kbps	16.34 kbps

Note: In transmission, set SPBR and BRDV that the division ratio of QSPCLK is 2 or more.

chanhvinh.com

18.3.9 Data Control Register (SPDCR)

SPDCR enables or disables dummy data transmission.

Bit:	7	6	5	4	3	2	1	0
	TXDMY	—	—	—	—	—	—	—
Initial Value:	0	0	0	0	0	0	0	0
R/W:	R/W	R	R	R	R	R	R	R

Bit	Bit Name	Initial Value	R/W	Description
7	TXDMY	0	R/W	Dummy Data Transmission Enable Enables or disables dummy data transmission from the QMO pin in single-SPI mode and the transmit buffer is empty. Specifically, if this bit is set to 1 when the transmit buffer is empty, 0 is output from the QMO pin as dummy data. This bit setting can be changed while the transmit end flag (TEND) in SPSR is 1. Otherwise, operation cannot be guaranteed. 0: Disables dummy data transmission. 1: Enables dummy data transmission.
6 to 0	—	All 0	R	Reserved These bits are always read as 0. The write value should always be 0.

chanhvinh.com

18.3.10 Clock Delay Register (SPCKD)

SPCKD sets a period (clock delay) from the beginning of QSSL signal assertion to QSPCLK oscillation when the QSPCLK delay setting enable bit (SCKDEN) in SPCMD0 to SPCMD3 is 1. If the contents of SPCKD are modified while the SPE bit in SPCR is 1, the subsequent operation cannot be guaranteed.

Bit:	7	6	5	4	3	2	1	0
	—	—	—	—	—	SCKDL2	SCKDL1	SCKDL0
Initial Value:	0	0	0	0	0	0	0	0
R/W:	R	R	R	R	R	R/W	R/W	R/W

Bit	Bit Name	Initial Value	R/W	Description
7 to 3	—	All 0	R	Reserved These bits are always read as 0. The write value should always be 0.
2	SCKDL2	0	R/W	Clock Delay Setting
1	SCKDL1	0	R/W	These bits set a period (clock delay) from the beginning of QSSL signal assertion to QSPCLK oscillation when the SCKDEN bit in SPCMD0 to SPCMD3 is 1. 000: 1.5 QSPCLK cycles 001: 2.5 QSPCLK cycles 010: 3.5 QSPCLK cycles 011: 4.5 QSPCLK cycles 100: 5.5 QSPCLK cycles 101: 6.5 QSPCLK cycles 110: 7.5 QSPCLK cycles 111: 8.5 QSPCLK cycles
0	SCKDL0	0	R/W	

chanhvinh.com

18.3.11 Slave Select Negation Delay Register (SSLND)

SSLND sets a period (QSSL negation delay) from the transmission of a final QSPCLK edge to the negation of the QSSL signal during a serial transfer when the QSSL negation delay setting enable bit (SLNDEN) in SPCMD0 to SPCMD3 is 1. If the contents of SSLND are modified while the SPE bit in SPCR is 1, the subsequent operation cannot be guaranteed.

Bit:	7	6	5	4	3	2	1	0
	—	—	—	—	—	SLNDL2	SLNDL1	SLNDL0
Initial Value:	0	0	0	0	0	0	0	0
R/W:	R	R	R	R	R	R/W	R/W	R/W

Bit	Bit Name	Initial Value	R/W	Description
7 to 3	—	All 0	R	Reserved These bits are always read as 0. The write value should always be 0.
2	SLNDL2	0	R/W	QSSL Negation Delay Setting
1	SLNDL1	0	R/W	These bits set a period (QSSL negation delay) from the transmission of a final QSPCLK edge to the negation of the QSSL signal during a serial transfer when the SLNDEN bit in SPCMD0 to SPCMD3 is 1. 000: 1 QSPCLK cycle 001: 2 QSPCLK cycles 010: 3 QSPCLK cycles 011: 4 QSPCLK cycles 100: 5 QSPCLK cycles 101: 6 QSPCLK cycles 110: 7 QSPCLK cycles 111: 8 QSPCLK cycles
0	SLNDL0	0	R/W	

chanhvinh.com

18.3.12 Next-Access Delay Register (SPND)

SPND sets a period (next-access delay) from termination of a serial transfer to the beginning of the next serial transfer when the next-access delay enable bit (SPNDEN) in SPCMD0 to SPCMD3 is 1. If the contents of SPND are modified while the SPE bit in SPCR is 1, the subsequent operation cannot be guaranteed.

Bit:	7	6	5	4	3	2	1	0
	—	—	—	—	—	SPNDL2	SPNDL1	SPNDL0
Initial Value:	0	0	0	0	0	0	0	0
R/W:	R	R	R	R	R	R/W	R/W	R/W

Bit	Bit Name	Initial Value	R/W	Description
7 to 3	—	All 0	R	Reserved These bits are always read as 0. The write value should always be 0.
2	SPNDL2	0	R/W	Next-Access Delay Setting
1	SPNDL1	0	R/W	These bits set a period (next-access delay) from termination of a serial transfer to the beginning of the next serial transfer when the SPNDEN bit in SPCMD0 to SPCMD3 is 1. 000: 1 QSPCLK cycle 001: 2 QSPCLK cycles 010: 3 QSPCLK cycles 011: 4 QSPCLK cycles 100: 5 QSPCLK cycles 101: 6 QSPCLK cycles 110: 7 QSPCLK cycles 111: 8 QSPCLK cycles
0	SPNDL0	0	R/W	

chanhvinh.com

18.3.13 Command Register n (SPCMDn) (n = 0 to 3)

Each channel has four command registers (SPCMD0 to SPCMD3). SPCMD0 to SPCMD3 are used to set a transfer format. This module sequentially references SPCMD0 to SPCMD3 according to the settings in the sequence control register (SPSCR), and executes the serial transfer that is set in the referenced SPCMD.

If the contents of currently referred-to SPCMD are modified while the TEND bit in SPSR indicates that communication has not been completed, the subsequent operation cannot be guaranteed. The currently referred-to SPCMD can be checked by reading the sequence status register (SPSSR).

Bit:	15	14	13	12	11	10	9	8	7	6	5	4	3	2	1	0
	SCKDEN	SLNDEN	SPNDEN	LSBF	SPB3	SPB2	SPB1	SPB0	SSLKP	SPIMOD1	SPIMOD0	SPRW	BRDV1	BRDV0	CPOL	CPHA
Initial Value:	1	1	1	0	0	0	0	0	0	0	0	0	0	0	0	1
R/W:	R/W	R/W	R/W	R/W	R/W	R/W	R/W	R/W	R/W	R/W	R/W	R/W	R/W	R/W	R/W	R/W

Bit	Bit Name	Initial Value	R/W	Description
15	SCKDEN	1	R/W	Clock Delay Setting Enable Sets a period (clock delay) from the beginning of QSSL signal assertion to QSPCLK oscillation. If this bit is 0, this module sets the clock delay to 0 QSPCLK cycle. If this bit is 1, this module starts QSPCLK oscillation in compliance with the clock delay register (SPCKD) settings. For the continuous access in which QSSL is kept asserted over the multiple commands, this bit can be set to 0 only when the pertinent command is the second or subsequent one. Otherwise, this bit should be set to 1. 0: A clock delay of 0 QSPCLK cycle 1: A clock delay equal to SPCKD settings.

chanhvinh.com

Bit	Bit Name	Initial Value	R/W	Description
14	SLNDEN	1	R/W	QSSL Negation Delay Setting Enable Sets a period (QSSL negation delay) from QSPCLK oscillation stoppage to QSSL signal negation. If this bit is 0, this module sets the QSSL negation delay to 0 QSPCLK cycle. If this bit is 1, this module negates the QSSL signal in compliance with the slave select negation delay register (SSLND) settings. For the continuous access in which QSSL is kept asserted over the multiplier commands, this bit can be set to 0 only when the pertinent command is not the last one. Otherwise, this bit should be set to 1. 0: An QSSL negation delay of 0 QSPCLK cycle 1: An QSSL negation delay equal to SSLND settings.
13	SPNDEN	1	R/W	Next-Access Delay Enable Sets the period (next-access delay) from termination of a serial transfer to the beginning of the next serial transfer. If this bit is 0, this module sets the next-access delay to 0 QSPCLK cycle. If this bit is 1, this module starts next serial transfer in compliance with the next-access delay register (SPND) settings. For the continuous access in which QSSL is kept asserted over the multiple commands, this bit can be set to 0 only when the pertinent command is not the last one. Otherwise, this bit should be set to 1. 0: A next-access delay of 0 QSPCLK cycle. 1: A next-access delay equal to SPND settings.
12	LSBF	0	R/W	LSB First Sets the data format to MSB first or LSB first. 0: MSB first 1: LSB first

chanhvinh.com

Bit	Bit Name	Initial Value	R/W	Description
11	SPB3	0	R/W	Transfer Data Length Setting
10	SPB2	0	R/W	These bits set the basic transfer data length for serial transfer. For LSB-first transfer, the transfer data is reversed within the data width specified with these bits. The actual amount of data to be transferred is determined by multiplying the value set with these bits by the value set with SPBMUL0 to SPBMUL3. 0000: 8 bits (1 byte) 0001: 16 bits (2 bytes) 0010: 32 bits (4 bytes) 0011 to 1111: Setting prohibited
9	SPB1	0	R/W	
8	SPB0	0	R/W	
7	SSLKP	0	R/W	QSSL Signal Level Keeping Specifies whether the QSSL signal level for the current command is to be kept or not from the end of the transfer for the current command to the beginning of the transfer for the next command. Setting this bit to 1 enables a transition to the next access while the QSSL signal is kept asserted. 0: Negates all QSSL signals upon completion of transfer. 1: Keeps the QSSL signal level from the end of the transfer to the beginning of the next access.
6	SPIMOD1	0	R/W	SPI Operating Mode
5	SPIMOD0	0	R/W	These bits select the operating mode from single-, dual-, or quad-SPI. 00: Single-SPI 01: Dual-SPI 10: Quad-SPI 11: Setting prohibited
4	SPRW	0	R/W	SPI Read/Write Access Sets an access direction in dual-/quad-SPI modes. This bit is invalid in single-SPI mode 0: Write operation (QIO1 and QIO0/QIO3 to QIO0: Output) 1: Read operation (QIO1 and QIO0/QIO3 to QIO0: Input)

chanhvinh.com

Bit	Bit Name	Initial Value	R/W	Description
3	BRDV1	0	R/W	Bit Rate Frequency Division Setting
2	BRDV0	0	R/W	The settings of this field and of the bit rate register (SPBR) together determine the bit rate. The base bit rate depends on the setting of the SPBR. The setting of this field selects division of the base bit rate by one, two, four, or eight. Individual BRDV [1:0] values can be set in each of command registers 0 to 3. Therefore, serial transfers can be at different bit rates for each of the commands. 00: Base bit rate 01: Two division of the base 10: Four division of the base 11: Eight division of the base Note: In transmission, set SPBR and these bits that the division ratio of QSPCLK is 2 or more.
1	CPOL	0	R/W	QSPCLK Polarity Setting Sets an QSPCLK polarity. When data communication is performed between the Renesas quad serial peripheral interface module and the other modules, the same QSPCLK polarity should be set for both modules. 0: Positive (QSPCLK = 0 when idle) 1: Negative (QSPCLK = 1 when idle)
0	CPHA	1	R/W	QSPCLK Phase Setting Sets an QSPCLK edge for latching and shifting data to be transferred. When data communication is performed between the Renesas quad serial peripheral interface module and the other modules, the same QSPCLK edge should be set for both modules. 0: Data latch on odd edge, data shift on even edge 1: Data shift on odd edge, data latch on even edge Note: The first QSPCLK edge is treated as the first edge.

chanhvinh.com

Reference: Some serial flash memory datasheets refer to QSPCLK specifications, which are determined by what this document refers to as CPOL and CPHA bits, as SPI modes 0 to 3. Assuming that SPI modes 0 to 3 are controlled by SPI mode bits [1:0], CPOL and CPHA in this document correspond to SPI mode bits 1 and 0, respectively.
In this module, the initial values of CPOL and CPHA are 0 and 1, respectively, selecting SPI mode 1 as the initial mode.

Notes: 1. When setting any or all of the clock delay period, QSSL negation delay period, and next-access delay period to 0, be sure to set SSLKP to 1 to select the continuous access in which QSSL is not negated. Otherwise, operation cannot be guaranteed. For the method of setting the various delay periods for the continuous access in which QSSL is not negated, see below.

2. For the continuous access in which QSSL is not negated, QSPCLK clock stopping is followed by the QSSL negation delay period, next-access delay period, and next command clock delay period, in this order. When setting any of the QSSL negation delay setting enable bit (SLNDEN), next-access delay enable bit (SPNDEN), and clock delay setting enable bit (SCKDEN) to 0, be sure to set the bit corresponding to the later period prior to the bit corresponding to the earlier period.

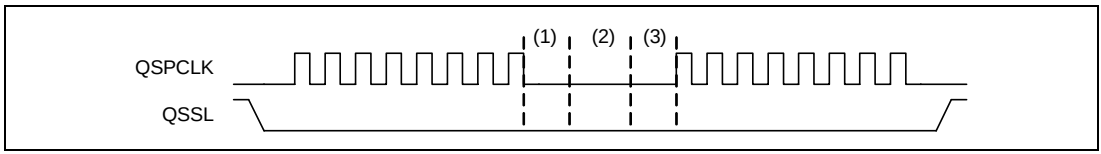

In the above figure, (1), (2), and (3) refer to the QSSL negation delay period, next-access delay period, and next command clock delay period, respectively. When setting any of these bits to 0, be sure to set (3) first. In other words, setting 1 after 0 as in {(1), (2), (3)} = {0, 0, 1}, {0, 1, 1}, {0, 1, 0} … is prohibited. Allowed setting is {(1), (2), (3)} = {1, 1, 1}, {1, 1, 0}, {1, 0, 0}, {0, 0, 0}. If set otherwise, operation cannot be guaranteed.

chanhvinh.com

Notes: 1. When changing BRDV[1:0] or CPOL for each command for the continuous access in which the QSSL level is held, be sure to insert the QSSL negation delay period, next-access delay period, and clock delay period between commands. Otherwise, operation cannot be guaranteed.

2. A clock polarity changing point may be detected as a clock edge if CPOL is changed with the QSSL level held.

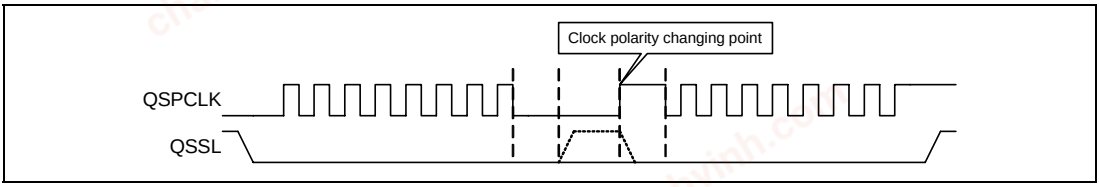

Note: When changing SPIMOD[1:0] or CPHA for each command for the continuous access in which the QSSL level is held, be sure to insert one cycle or more between commands. Otherwise, operation cannot be guaranteed.
(This also applies to write-to-read or read-to-write switching in dual-/quad-SPI modes.)
In the figure below, the data line is driven during the command n period if command n is for dual-/quad-SPI write access.

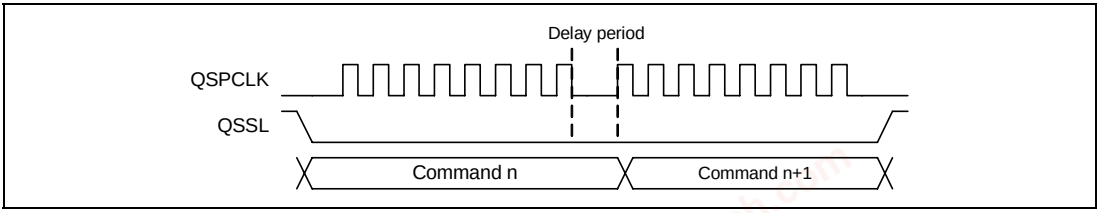

chanhvinh.com

18.3.14 Buffer Control Register (SPBFCR)

SPBFCR resets the number of data units in the transmit buffer (SPTXB) or receive buffer (SPRXB) and sets the number of triggering data units.

Bit:	7	6	5	4	3	2	1	0
	TXRST	RXRST	TXTRG1	TXTRG0	—	RXTRG2	RXTRG1	RXTRG0
Initial Value:	0	0	0	0	0	0	0	0
R/W:	R/W	R/W	R/W	R/W	R	R/W	R/W	R/W

Bit	Bit Name	Initial Value	R/W	Description
7	TXRST	0	R/W	Transmit Buffer Data Reset Invalidates transmit data in the transmit buffer and resets the transmit buffer to an empty state. 0: Allows the transmit buffer normal operation. 1: Resets the transmit buffer.
6	RXRST	0	R/W	Receive Buffer Data Reset Invalidates receive data in the receive buffer and resets the receive buffer to an empty state. 0: Allows the receive buffer normal operation. 1: Resets the receive buffer.
5	TXTRG1	0	R/W	Transmit Buffer Data Triggering Number
4	TXTRG0	0	R/W	Specifies the timing at which the transmit buffer empty state is determined, that is when the SPTEF flag in the status register is set. When the number of bytes of data in the transmit buffer (SPTXB) is equal to or less than the specified triggering number, the SPTEF flag is set to 1. 00: 31 bytes (1 byte available) 01: 30 bytes (2 bytes available) 10: 28 bytes (4 bytes available) 11: 0 bytes (32 bytes available)
3	—	0	R	Reserved This bit is always read as 0. The write value should always be 0.

chanhvinh.com

Bit	Bit Name	Initial Value	R/W	Description
2	RXTRG2	0	R/W	Receive Buffer Data Triggering Number
1	RXTRG1	0	R/W	Specifies the timing at which the receive buffer full state is determined, that is when the SPRFF flag in the status register is set. When the number of bytes of data in the receive buffer (SPRXB) is equal to or greater than the specified triggering number, the SPRFF flag is set to 1. 000: 1 byte (31 bytes available) 001: 2 bytes (30 bytes available) 010: 4 bytes (28 bytes available) 011: 5 bytes (27 bytes available) 100: 8 bytes (24 bytes available) 101: 16 bytes (16 bytes available) 110: 24 bytes (8 bytes available) 111: 32 bytes (0 byte available)
0	RXTRG0	0	R/W	

chanhvinh.com

18.3.15 Buffer Data Count Register (SPBDCR)

SPBDCR indicates the number of data units stored in the transmit buffer (SPTXB) and receive buffer (SPRXB). The upper eight bits indicate the number of transmit data units in the transmit buffer and the lower eight bits indicate the number of receive data units in the receive buffer.

Bit:	15	14	13	12	11	10	9	8	7	6	5	4	3	2	1	0
	—	—	TXBC5	TXBC4	TXBC3	TXBC2	TXBC1	TXBC0	—	—	RXBC5	RXBC4	RXBC3	RXBC2	RXBC1	RXBC0
Initial Value:	0	0	0	0	0	0	0	0	0	0	0	0	0	0	0	0
R/W:	R	R	R	R	R	R	R	R	R	R	R	R	R	R	R	R

Bit	Bit Name	Initial Value	R/W	Description
15, 14	—	All 0	R	Reserved These bits are always read as 0. The write value should always be 0.
13 to 8	TXBC[5:0]	000000	R	Transmit Data Byte Counter Indicates the number of transmit data bytes in the transmit data buffer (SPTXB). B'000000 indicates that SPTXB is empty. B'100000 indicates that SPTXB is full.
7, 6	—	All 0	R	Reserved These bits are always read as 0. The write value should always be 0.
5 to 0	RXBC[5:0]	000000	R	Receive Data Byte Counter Indicates the number of receive data bytes in the receive data buffer (SPRXB). B'000000 indicates that SPRXB is empty. B'100000 indicates that SPRXB is full.

chanhvinh.com

18.3.16 Transfer Data Length Multiplier Setting Register n (SPBMULn) (n = 0, 1, 2, 3)

SPBMUL0 to SPBMUL3 set the number of times to transfer the specific length of data defined by the transfer data length setting bits (SPB[3:0]) in SPCMD0 to SPCMD3. SPBMUL0 to SPBMUL3 correspond to SPCMD0 to SPCMD3, respectively.

If a command register is referred to while the TEND bit in SPSR indicates that communication has not been completed and SPBMUL corresponding to the referred-to command register is modified, the subsequent operation is not guaranteed. The currently referred-to command register can be checked by reading the sequence status register (SPSSR).

Bit:	31	30	29	28	27	26	25	24	23	22	21	20	19	18	17	16
	SPBMUL [31:24]								SPBMUL [23:16]							
Initial Value:	0	0	0	0	0	0	0	0	0	0	0	0	0	0	0	0
R/W:	R/W	R/W	R/W	R/W	R/W	R/W	R/W	R/W	R/W	R/W	R/W	R/W	R/W	R/W	R/W	R/W

Bit:	15	14	13	12	11	10	9	8	7	6	5	4	3	2	1	0
	SPBMUL [15:8]								SPBMUL [7:0]							
Initial Value:	0	0	0	0	0	0	0	0	0	0	0	0	0	0	0	1
R/W:	R/W	R/W	R/W	R/W	R/W	R/W	R/W	R/W	R/W	R/W	R/W	R/W	R/W	R/W	R/W	R/W

Bit	Bit Name	Initial Value	R/W	Description
31 to 0	SPBMUL [31:0]	H'00000001	R/W	Transfer Data Length Multiplier Setting These bits set the multiplier for transfer data; that is, the number of times to transfer the specific length of data defined by SPB3 to SPB0 bits in SPCMD0 to SPCMD3. The actual amount of data to be transferred is determined by SPB[3:0] × SPBMUL[31:0]. Setting these bits to H'00000000 allows the defined size of data to be transferred 4,294,967,296 times.

chanhvinh.com

18.4 Operation

In this section, the serial transfer period means a period from the beginning of driving valid data to the fetching of the final valid data, and the QSSL negation period means the idle period.

18.4.1 Overview of Operations

This module is capable of serial transfers in single-/dual-/quad-SPI modes. Table 18.4 gives the features of single-/dual-/quad-SPI modes.

Table 18.4 Features of Each SPI Mode

	Single-SPI	Dual-SPI	Quad-SPI
Number of data lines	One input line and one output line	Two IO lines	Four IO lines
Data line direction	Single-directional	Bidirectional	Bidirectional
Simultaneous transmission/reception	Supported	Not supported	Not supported

chanhvinh.com

Table 18.5 gives the overview of operation.

Table 18.5 Overview of Operation

Items	Specification
QSPCLK signal	Output
QMO signal (single-SPI)	Output
QMI signal (single-SPI)	Input
QIO1 and QIO0 (dual-SPI)/ QIO3 to QIO0 (quad-SPI)	Input/output
QSSL signal	Output
Switching QSSL polarity	Supported
Transfer rate	Up to P1ϕ
Clock source	On-chip baud rate generator
Clock polarity	Positive/negative
Clock phase	Latch at rising/output at falling Latch at falling/output at rising
Transfer bit order	MSB first/LSB first
Transfer data length	(8/16/32) $\times$ (1 to 4,294,967,296) bits
Burst transfer	Supported
QSPCLK delay control	Supported
QSSL negation delay control	Supported
Next-access delay control	Supported
Transfer start method	Writing data to the transmit buffer when SPE = 1 There is space in the receive buffer when SPE = 1*
Sequence control	Supported
Transmit buffer empty detection	Supported
Receive buffer full detection	Supported

Note: * During single-SPI operation and dual-/quad-SPI mode write operation, a transfer is started by setting SPE to 1 and writing data to the transmit buffer. During dual-/quad-SPI mode read operation, a transfer is started by setting SPE to 1 when there is space for the specified length of data in the receive buffer.

chanhvinh.com

18.4.2 Pin Control

This module automatically switches the pin states according to the status after write/read transfer in single-/dual-/quad-SPI mode. The status of the data pins (QMO/QMI/QIO[3:0]) in the idle state depends on the MOIFE and MOIFV bit settings, the single-/dual-SPI mode QIO3 output fixed value bit (IO3FV) setting in, and the single-/dual-SPI mode QIO2 output fixed value bit (IO2FV) setting. Table 18.6 shows the pin states in single-SPI mode. Table 18.7 shows the pin states in dual-/quad-SPI modes.

Table 18.6 Pin States in Single-SPI Mode

Items	Single-SPI Mode
QSSL	Output
QSPCLK	Output
QMO	Output
QMI	Input
QMO in the idle state	MOIFE = 0: Final output value MOIFE = 1: MOIFV setting value
QMI in the idle state	—
QIO2	IO2FV setting value output or not used
QIO3	IO3FV setting value output or not used

chanhvinh.com

Table 18.7 Pin States in Dual-/Quad-SPI Mode

Items	Dual-SPI Mode	Quad-SPI Mode
QSSL	Output	Output
QSPCLK	Output	Output
QIO0	I/O	I/O
QIO1	I/O	I/O
QIO2	IO2FV setting value output or not used	I/O
QIO3	IO3FV setting value output or not used	I/O
QIO0 in the idle state	After writing: MOIFE = 0: Final output value MOIFE = 1: MOIFV setting value After reading: Hi-Z	After writing: MOIFE = 0: Final output value MOIFE = 1: MOIFV setting value After reading: Hi-Z
QIO1 in the idle state	After writing: MOIFE = 0: Final output value MOIFE = 1: MOIFV setting value After reading: Hi-Z	After writing: MOIFE = 0: Final output value MOIFE = 1: MOIFV setting value After reading: Hi-Z
QIO2 in the idle state	IO2FV setting value output or not used	After writing: MOIFE = 0: Final output value MOIFE = 1: MOIFV setting value After reading: Hi-Z
QIO3 in the idle state	IO3FV setting value output or not used	After writing: MOIFE = 0: Final output value MOIFE = 1: MOIFV setting value After reading: Hi-Z

18.4.3 Transfer Format

The SPI has four clock settings determined by the QSPCLK polarity setting (CPOL) and QSPCLK phase setting (CPHA) bits in SPCMD0 to SPCMD3. Figure 18.1 shows the data latch/shift timing based on each setting in an 8-bit MSB first transfer. In figure 18.1, L indicates the latch timing and S indicates the shift timing. DATA corresponds to QMI/QMO in single-SPI mode; QIO1 and QIO0 in dual-SPI mode; or QIO3 to QIO0 in quad-SPI mode. t_{ckd} indicates the clock delay period when the SCKDEN bit in SPCMD0 to SPCMD3 is set to 1. Similarly, t_{slnd} indicates the QSSL negation delay period when the SLNDEN bit in SPCMD0 to SPCMD3 is set to 1, and t_{spnd} indicates the next-access delay period when the SPNDEN bit in SPCMD0 to SPCMD3 is set to 1.

chanhvinh.com

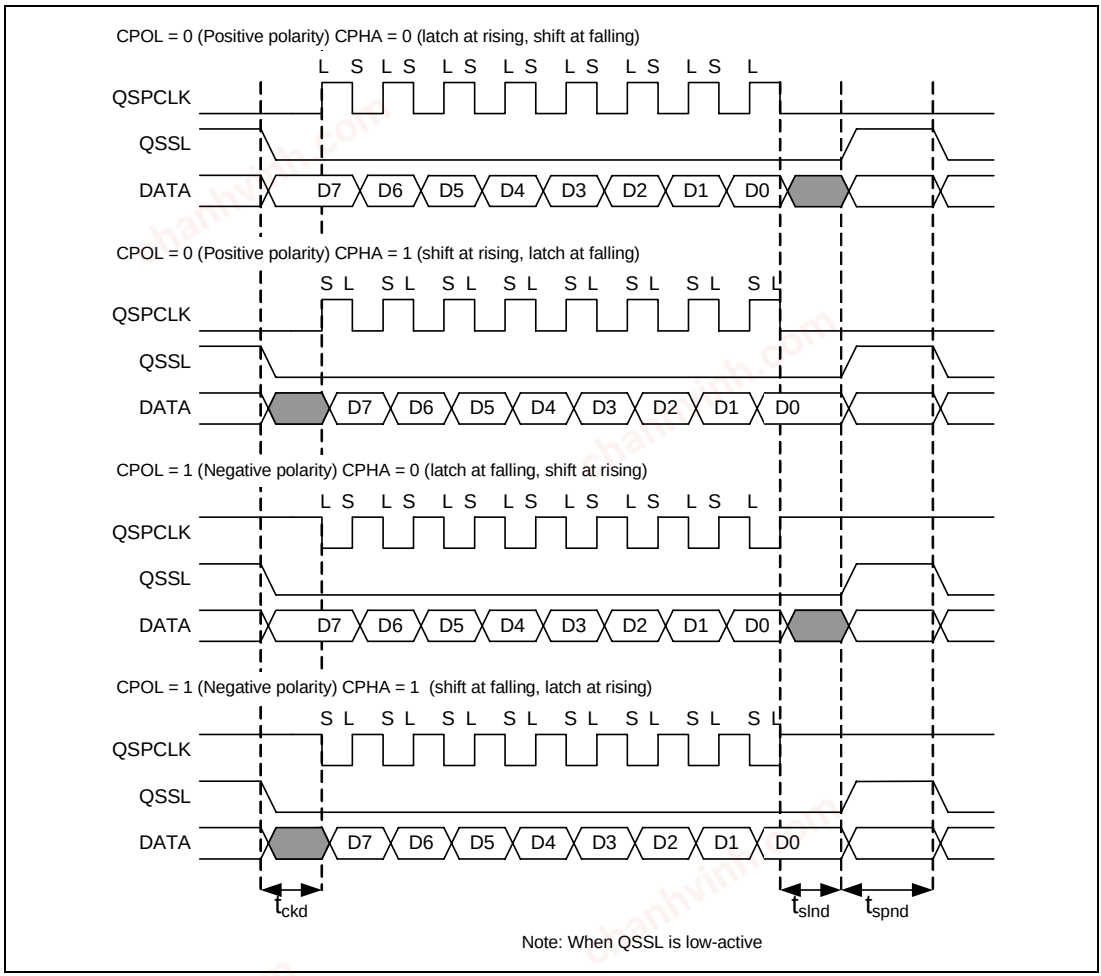

Figure 18.1 SPI Clock Setting and Transfer Timing

chanhvinh.com

Note that when the base bit rate is used, transmission and reception when CPHA = 0 is not available.

The following describes 8-bit MSB first transfer in single-/dual-/quad-SPI modes when CPOL = 0 and CPHA = 0.

(1) Single-SPI Mode

Figure 18.2 shows the transfer format in single-SPI mode. This mode provides transmission and reception simultaneously. Since one data line is used for serial communication both in transmission and reception, the communication speed is 1 bit per QSPCLK clock cycle. Transfer data is specified using SPCMD0 to SPCMD3. For details of transfer data, see section 18.4.4, Transfer Data.

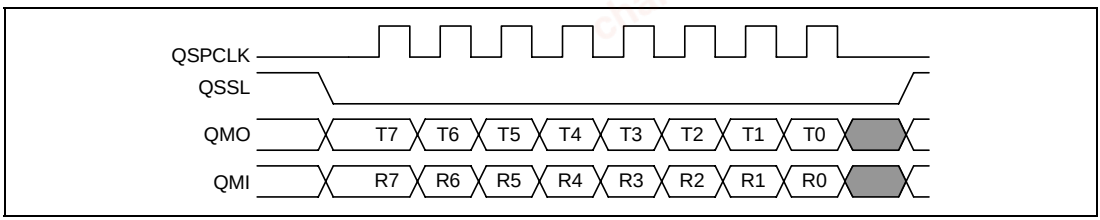

Figure 18.2 Transfer Format in Single-SPI Format

(2) Dual-SPI Mode

Figure 18.3 shows the transfer format in dual-SPI mode. This mode only provides operation of a single direction, that is, either transmission or reception. Transmission or reception can be set using the SPI read/write access setting bit (SPRW) in SPCMD0 to SPCMD3. Transmission is carried out by write operation and reception by read operation. The IO directions of QIO1 and QIO0 are switched accordingly. Since two data lines are used for serial communication both in transmission and reception, the communication speed is 2 bits per QSPCLK clock cycle. The start bit of the transfer data is output from QIO1. Transfer data is specified using SPCMD0 to SPCMD3. For details of transfer data, see section 18.4.4, Transfer Data.

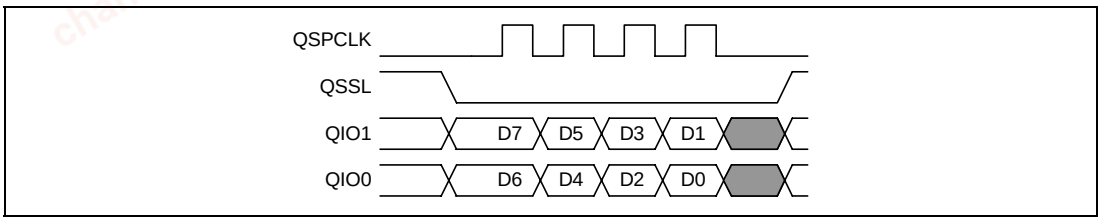

Figure 18.3 Transfer Format in Dual-SPI Format

chanhvinh.com

(3) Quad-SPI Mode

Figure 18.4 shows the transfer format in quad-SPI mode. This mode provides operation of a single direction, that is, either transmission or reception. Transmission or reception can be set using the SPRW bit in SPCMD0 to SPCMD3. Transmission and reception are accomplished by writing and reading, respectively. The IO directions of QIO3 to QIO0 are switched accordingly. Since four data lines are used for serial communication both in transmission and reception, the communication speed is 4 bits per QSPCLK clock cycle. The start bit of the transfer data is output from QIO3. Transfer data is specified using SPCMD0 to SPCMD3. For details of transfer data, see section 18.4.4, Transfer Data.

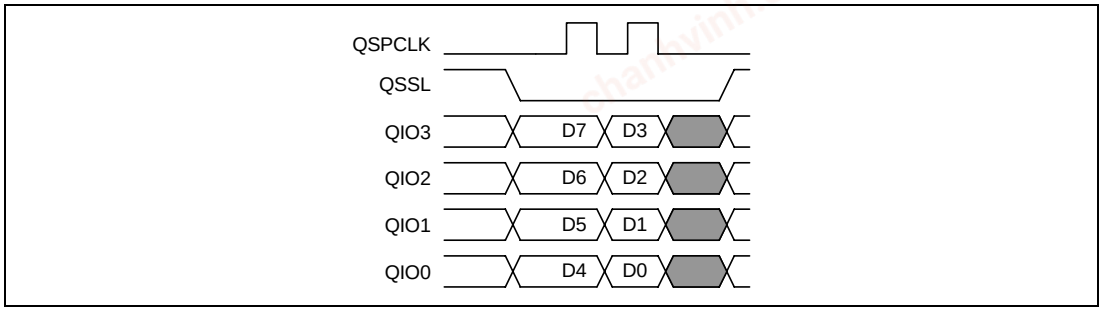

Figure 18.4 Transfer Format in Quad-SPI Format

18.4.4 Transfer Data

The data format is determined by the SPB3 to SPB0 and the LSB first (LSBF) bits in SPCMD0 to SPCMD3 and SPBMUL0 to SPBMUL3. In both MSB first and LSB first transfers, this module treats the specified size of data beginning at the MSB of the transmit shift register as transmit data, and the specified length of data beginning at the LSB of the receive shift register as receive data, regardless of whether the actual arrangement is MSB or LSB-first. The following sections describe MSB first and LSB first transfers in 32-bit, 16-bit, and 8-bit data units.

chanhvinh.com

(1) MSB First Transfer (32-Bit Data)

Figure 18.5 shows the operation of the transmit buffer and transmit shift register, and the receive shift register and receive buffer when this module performs a 32-bit MSB-first data transfer.

For data transmission, the CPU or direct memory access controller writes 32-bit transmit data to the transmit buffer (SPTXB). If the transmit shift register is empty, this module copies the data with MSB-aligned in the transmit buffer to the transmit shift register, and fills the transmit shift register. When data transmission is started, this module outputs data beginning at the MSB (bit 31) of the transmit shift register, and when the QSPCLK clock cycle required for the serial transfer of 32 bits has passed, the transmit shift register becomes empty.

For data reception, data received from the data pin is stored in the receive shift register beginning at the LSB (bit 0). When the QSPCLK clock cycle required for the serial transfer of 32 bits has passed, the receive shift register becomes full. If the receive buffer (SPRXB) has a space for 32 bits or more, this module copies the 32-bit data beginning at the LSB from the receive shift register to the receive buffer, and empties the receive shift register. If the receive buffer does not have a space for 32 bits or more, data reception is not carried out. In order to start reception, the specified length of data should be read from the receive buffer to secure the space for 32 bits or more in the receive buffer.

In actual transfer, this operation is repeated for the number of times defined by SPBMUL0 to SPBMUL3.

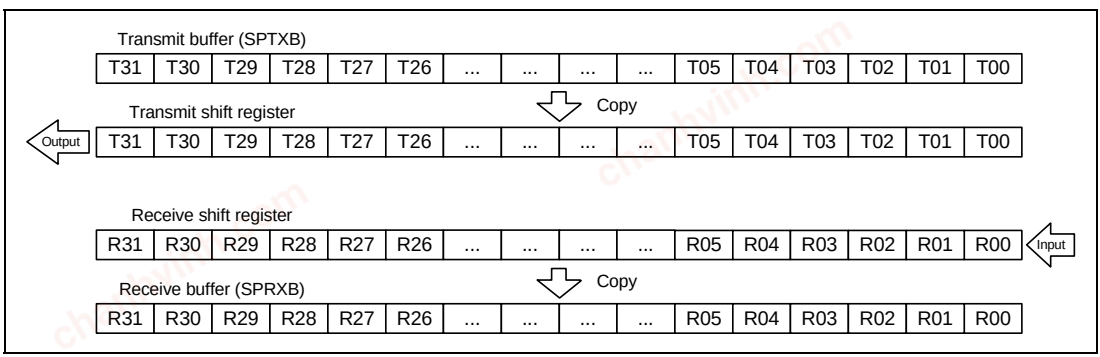

Figure 18.5 MSB First Transfer (32-Bit Data)

chanhvinh.com

(2) MSB First Transfer (16-Bit Data)

Figure 18.6 shows the operation of the transmit buffer and transmit shift register, and the receive shift register and receive buffer when this module performs a 16-bit MSB-first data transfer.

For data transmission, the CPU or direct memory access controller writes 16-bit transmit data to the transmit buffer (SPTXB). If the transmit shift register is empty, this module copies the data with MSB-aligned in the transmit buffer to the transmit shift register, and fills the transmit shift register. When data transmission is started, this module outputs data beginning at the MSB (bit 31) of the transmit shift register, and when the QSPCLK clock cycle required for the serial transfer of 16 bits has passed, the transmit shift register becomes empty.

For data reception, data received from the data pin is stored in the receive shift register beginning at the LSB (bit 0). When the QSPCLK clock cycle required for the serial transfer of 16 bits has passed, the receive shift register becomes full. If the receive buffer (SPRXB) has a space for 16 bits or more, this module copies the 16-bit data beginning at the LSB from the receive shift register to the receive buffer, and empties the receive shift register. If the receive buffer does not have a space for 16 bits or more, data reception is not carried out. In order to start reception, the specified length of data should be read from the receive buffer to secure the space for 16 bits or more in the receive buffer.

In actual transfer, this operation is repeated for the number of times defined by SPBMUL0 to SPBMUL3.

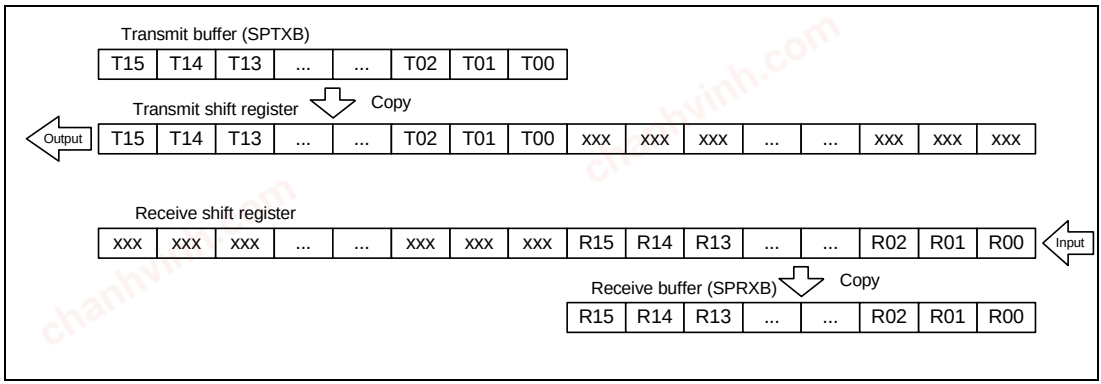

Figure 18.6 MSB First Transfer (16-Bit Data)

chanhvinh.com

(3) MSB First Transfer (8-Bit Data)

Figure 18.7 shows the operation of the transmit buffer and transmit shift register, and the receive shift register and receive buffer when this module performs an 8-bit MSB-first data transfer.

For data transmission, the CPU or direct memory access controller writes 8-bit transmit data to the transmit buffer (SPTXB). If the transmit shift register is empty, this module copies the data with MSB-aligned in the transmit buffer to the transmit shift register, and fills the transmit shift register. When data transmission is started, this module outputs data beginning at the MSB (bit 31) of the transmit shift register, and when the QSPCLK clock cycle required for the serial transfer of 8 bits has passed, the transmit shift register becomes empty.

For data reception, data received from the data pin is stored in the receive shift register beginning at the LSB (bit 0). When the QSPCLK clock cycle required for the serial transfer of 8 bits has passed, the receive shift register becomes full. If the receive buffer (SPRXB) has a space for 8 bits or more, this module copies the 8-bit data beginning at the LSB from the receive shift register to the receive buffer, and empties the receive shift register. If the receive buffer does not have a space for 8 bits or more, data reception is not carried out. In order to start reception, data for the specified length of data should be read from the receive buffer to secure the space for 8 bits or more in the receive buffer.

In actual transfer, this operation is repeated for the number of times defined by SPBMUL0 to SPBMUL3.

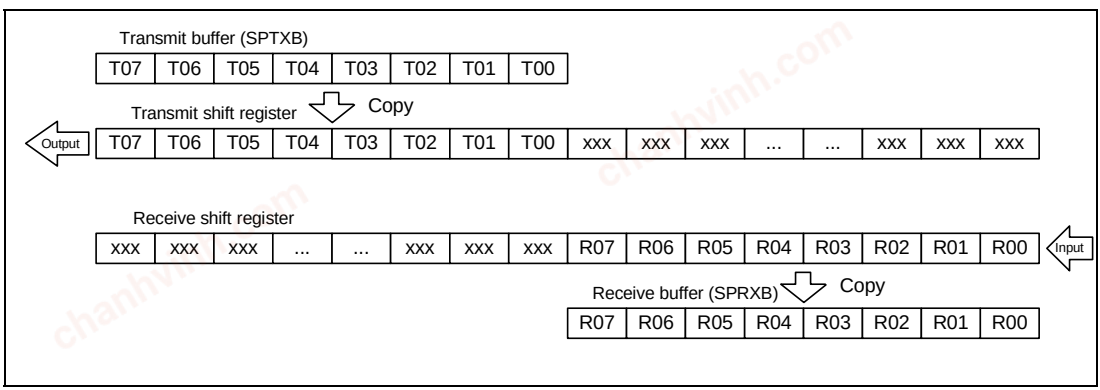

Figure 18.7 MSB First Transfer (8-Bit Data)

chanhvinh.com

(4) LSB First Transfer (32-Bit Data)

Figure 18.8 shows the operation of the transmit buffer and transmit shift register, and the receive shift register and receive buffer when this module performs a 32-bit LSB-first data transfer.

For data transmission, the CPU or direct memory access controller writes 32-bit transmit data to the transmit buffer (SPTXB). If the transmit shift register is empty, this module reverses the bit order in the 32-bit transmit data, copies it with MSB-aligned to the transmit shift register, and fills the transmit shift register. When data transmission is started, this module outputs data beginning at the MSB (bit 31) of the transmit shift register, and when the QSPCLK clock cycle required for the serial transfer of 32 bits has passed, the transmit shift register becomes empty.

For data reception, data received from the data pin is stored in the receive shift register beginning at the LSB (bit 0). When the QSPCLK clock cycle required for the serial transfer of 32 bits has passed, the receive shift register becomes full. If the receive buffer (SPRXB) has a space for 32 bits or more, this module reverses the order of the bits of the 32-bit data, copies it beginning at the LSB from the receive shift register to the receive buffer, and empties the receive shift register. If the receive buffer does not have a space for 32 bits or more, data reception is not carried out. In order to start reception, the specified length of data should be read from the receive buffer to secure the space for 32 bits or more in the receive buffer.

In actual transfer, this operation is repeated for the number of times defined by SPBMUL0 to SPBMUL3.

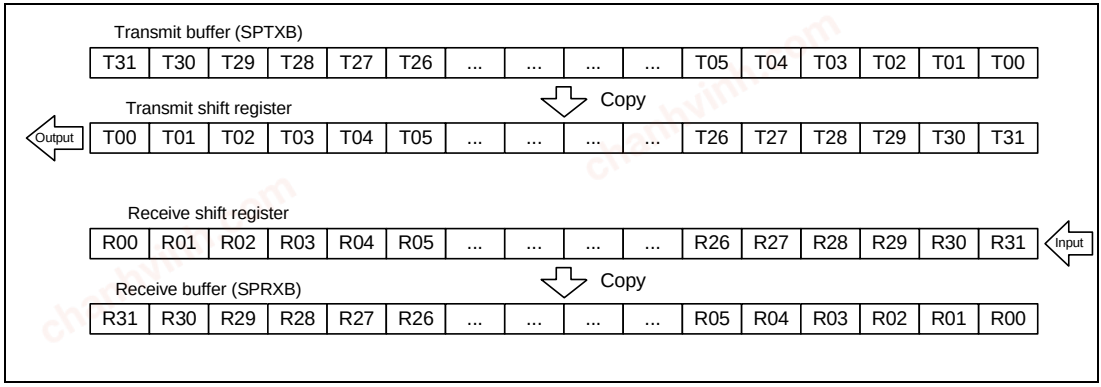

Figure 18.8 LSB First Transfer (32-Bit Data)

chanhvinh.com

(5) LSB First Transfer (16-Bit Data)

Figure 18.9 shows the operation of the transmit buffer and transmit shift register, and the receive shift register and receive buffer when this module performs a 16-bit LSB-first data transfer.

For data transmission, the CPU or direct memory access controller writes 16-bit transmit data to the transmit buffer (SPTXB). If the transmit shift register is empty, this module reverses the bit order in the 16-bit transmit data, copies it with MSB-aligned to the transmit shift register, and fills the transmit shift register. When data transmission is started, this module outputs data beginning at the MSB (bit 31) of the transmit shift register, and when the QSPCLK clock cycle required for the serial transfer of 16 bits has passed, the transmit shift register becomes empty.

For data reception, data received from the data pin is stored in the receive shift register beginning at the LSB (bit 0). When the QSPCLK clock cycle required for the serial transfer of 16 bits has passed, the receive shift register becomes full. If the receive buffer (SPRXB) has a space for 16 bits or more, this module reverses the bit order in the 16-bit data, copies it beginning at the LSB from the receive shift register to the receive buffer, and empties the receive shift register. If the receive buffer does not have a space for 16 bits or more, data reception is not carried out. In order to start reception, the specified length of data should be read from the receive buffer to secure the space for 16 bits or more in the receive buffer.

In actual transfer, this operation is repeated for the number of times defined by SPBMUL0 to SPBMUL3.

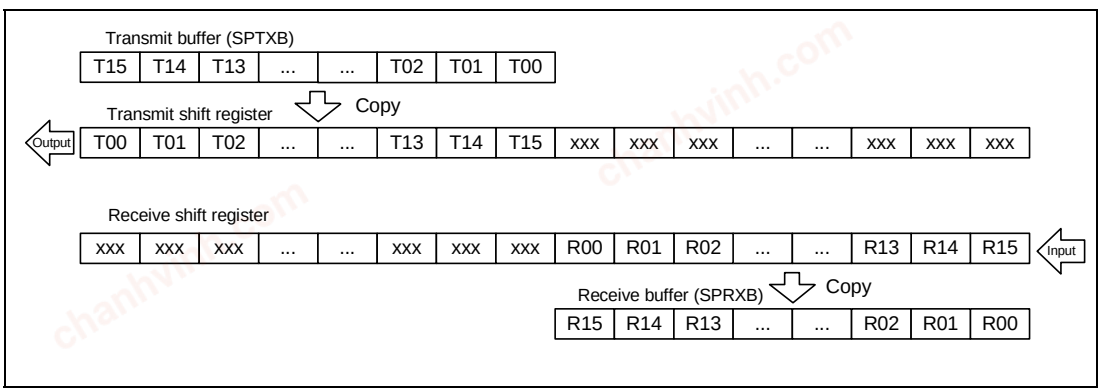

Figure 18.9 LSB First Transfer (16-Bit Data)

chanhvinh.com

(6) LSB First Transfer (8-Bit Data)

Figure 18.10 shows the operation of the transmit buffer and transmit shift register, and the receive shift register and receive buffer when this module performs an 8-bit LSB-first data transfer.

For data transmission, the CPU or direct memory access controller writes 8-bit transmit data to the transmit buffer (SPTXB). If the transmit shift register is empty, this module reverses the bit order in the 8-bit transmit data, copies it with MSB-aligned to the transmit shift register, and fills the transmit shift register. When data transmission is started, this module outputs data beginning at the MSB (bit 31) of the transmit shift register, and when the QSPCLK clock cycle required for the serial transfer of 8 bits has passed, the transmit shift register becomes empty.

For data reception, data received from the data pin is stored in the received shift register beginning at the LSB (bit 0). When the QSPCLK clock cycle required for the serial transfer of 8 bits has passed, the receive shift register becomes full. If the receive buffer (SPRXB) has a space for 8 bits or more, this module reverses the bit order in the 8-bit data, copies it beginning at the LSB from the receive shift register to the receive buffer, and empties the receive shift register. If the receive buffer does not have a space for 8 bits or more, data reception is not carried out. In order to start reception, the specified length of data should be read from the receive buffer to secure the space for 8 bits or more in the receive buffer.

In actual transfer, this operation is repeated for the number of times defined by SPBMUL0 to SPBMUL3.

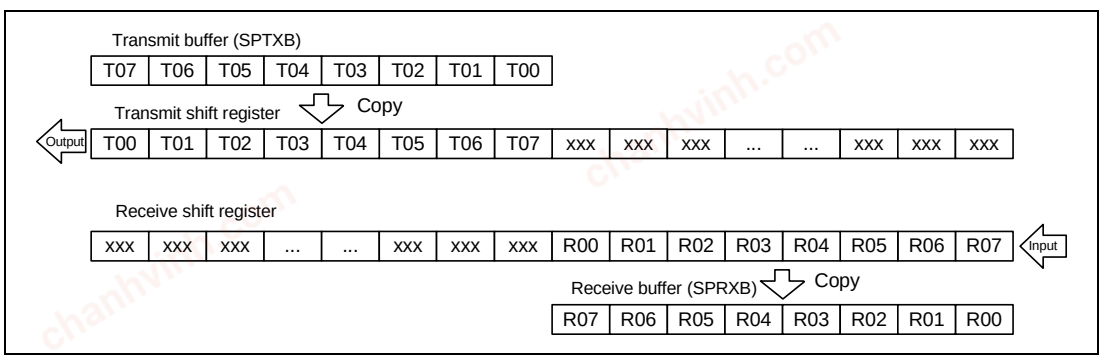

Figure 18.10 LSB First Transfer (8-Bit Data)

chanhvinh.com

18.4.5 Non-Normal Transfer Operations

In the normal serial transfer, the data written from SPDR to the transmit buffer is serially transmitted, and the serially received data can be read from the receive buffer of SPDR. If access is made to SPDR, depending on the status of the transmit buffer/receive buffer, in some cases non-normal transfers can be executed.

Table 18.8 shows the relationship between non-normal transfer operations.

Table 18.8 Relationship between Non-Normal Transfer Operations

	Occurrence Condition	Operation
A	SPDR is written when the transmit buffer is full.	Missing write data.
B	SPDR is read when the receive buffer is empty.	The output data is undefined.

On operation A shown in table 18.8, whether SPDR can be written to or not can be checked using the transmit data byte counter bits (TXBC[5:0]) in the buffer data count register (SPBDCR).

Similarly, on operation B shown in table 18.8, whether the valid data is stored in the receive buffer or not can be checked by reading the receive data byte counter bits (RXBC[5:0]) in SPBDCR.

chanhvinh.com

18.4.6 Initialization

If 0 is written to the SPE bit in SPCR, this module disables the module function, and initializes a part of the module function. When a power-on reset is generated, this module initializes all of the module function.

When the SPE bit in SPCR is cleared to 0, this module performs the following initialization:

- Suspending any serial transfer that is being executed
- Initializing the transmit shift register and the receive shift register
- Initializing the internal state machine
- Initializing the sequence
- Initializing the TEND bit in SPSR

Initialization by the clearing of the SPE bit to 0 does not initialize the control bits of this module and the transmit/receive buffer. For this reason, this module can be started in the same transfer mode as prior to the initialization if the SPE bit is re-set to 1. However, clearing the SPE bit to 0 initializes the transmit shift register and the receive shift register and allows the data that is being transferred to be discarded.

18.4.7 SPI Operation

The operating modes of this module are listed below.

- Single-SPI mode
- Dual-SPI mode/quad-SPI mode

The operation in each mode is described below.

(1) Single-SPI Mode

(a) Starting Serial Transfer

The serial transfer start conditions are: there is the specified length of data in the transmit buffer; and there is space for the specified length of data in the receive buffer.

(b) Terminating Serial Transfer

Irrespective of the clock setting, this module terminates the serial transfer after transmitting an QSPCLK edge corresponding to the final sampling timing. After the serial transfer is completed, receive data is copied from the receive shift register to the receive buffer. If there is not enough space for the specified length of data in the receive buffer after receive data is copied from the receive shift register to the receive buffer, another serial transfer will not be performed.

chanhvinh.com

(c) Sequence Control

In single-SPI mode, according to the sequence length that is assigned to the sequence control register (SPSCR), this module makes up a sequence comprised of a part or all of SPCMD0 to SPCMD3 and SPBMUL0 to SPBMUL3. This module contains a pointer to the SPCMD that makes up the sequence. The value of this pointer can be checked by reading SPSSR.

When the SPE bit in SPCR is set to 1 and the function of this module is enabled, this module loads the pointer to the commands in SPCMD0, and incorporates the SPCMD0 and SPBMUL0 settings into the transfer format at the beginning of serial transfer. This module increments the pointer each time the next-access delay period for a data transfer that corresponds to the referenced SPCMD0 to SPCMD3 ends. Upon completion of the serial transfer that corresponds to the final command comprising the sequence, this module sets the pointer in SPCMD0, and in this manner the sequence is executed repeatedly.

The following items are set in command registers SPCMD0 to SPCMD3: basic transfer data length, MSB or LSB first, clock settings, some of the bit rate settings, SPI transfer mode and transfer direction (only in dual-/quad-SPI modes), whether QSSL level is held, a clock delay period, an QSSL negation delay period, and a next-access delay period. The total amount of data to be transferred is determined by multiplying the basic length of data to be transferred by the value set with SPBMUL0 to SPBMUL3.

Figure 18.11 shows an operation example when SPSCR is set to H'02, and the sequence is configured based on SPCMD0 to SPCMD2 settings. In figure 18.11, shaded areas of QMO/QMI indicate invalid data. Periods (1) to (3) in figure 18.11 indicate the followings.

(1) Clock delay period (SPCKD) setting value = B'000 (1.5 QSPCLK cycles)
(2) QSSL negation delay period (QSSLND) setting value = B'000 (1 QSPCLK cycle)
(3) Next-access delay period (SPND) setting value = B'000 (1 QSPCLK cycle)

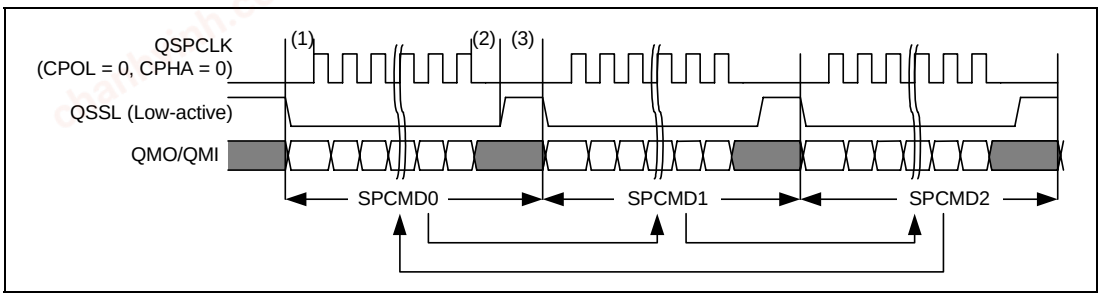

Figure 18.11 Sequence Control Operation

chanhvinh.com

(d) Burst Transfer

This module can execute burst transfer with the following two methods in single-SPI mode.

One method uses the SPB[3:0] bits in SPCMD0 to SPCMD3 and SPBMUL0 to SPBMUL3. Setting SPB[3:0] to select 8, 16, or 32 bits and setting SPBMUL0 to SPBMUL3 to select one through 4,294,967,296 allows the specified length of data to be continuously transferred for the specified times, where the length is specified by SPB[3:0] and the number of times is specified by SPBMUL0 to SPBMUL3. However, if the transmit buffer (SPTXB) becomes empty during transfer, or the receive buffer (SPRXB) has no longer a space enough to receive the specified length of data defined by SPB[3:0], the clock is stopped until transfer is resumed. Figure 18.12 shows a burst transfer example in which SPB[3:0] are set to select 32 bits and SPBMUL to select four times thus specifying 128 bits as a total transfer data amount. The following describes operations (1) to (4) in the figure.

(1) First 32-bit data transfer

(2) Second 32-bit data transfer

(3) When the transmit buffer becomes empty or the receive buffer has no longer a space for 32 or more bits, the clock is stopped. Here, the QMO continues outputting the previous value. When data is written to the transmit buffer or an enough space is created in the receive buffer, the clock output is resumed to restart transfer.

(4) Third and fourth 32-bit data transfer

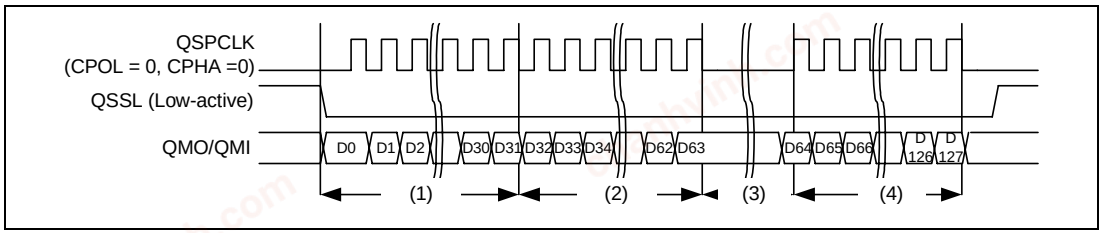

Figure 18.12 Burst Transfer Example in which Total Transfer Data Amount is 128 Bits (Single-SPI Mode Used)

chanhvinh.com

In the other method, QSSL is kept asserted after a serial transfer is completed until the next serial transfer. Setting the QSSL signal level keeping bit (SSLKP) to 1 in SPCMD0 to SPCMD3 allows the QSSL signal to be kept asserted after the transfer corresponding to the pertinent command register is completed until the next transfer. Figure 18.13 shows a burst transfer example in which the QSSL signal level keeping function is used. The following describes operations (1) to (6) in the figure.

(1) Clock delay period according to the SPCMD0 setting. The setting must be made so that the delay period should be at least 1.5 QSPCLK cycles for the first transfer in the burst transfer.

(2) QSSL negation delay period according to the SPCMD0 setting. Since SSLKP is set to 1, QSSL is not negated even after QSSL negation delay period is over. The QSSL negation delay period depends on the SLNDEN bit setting in SPCMD0. When SLNDEN is 1, the QSSL negation delay period is determined by the SSLND setting, and the delay period is 0 QSPCLK cycle when SLNDEN is 0.

(3) Next-access delay period according to the SPCMD0 setting. Since SSLKP is set to 1, QSSL is not negated even during the next-access delay period. The next-access delay period depends on the SPNDEN bit setting in SPCMD0. When SPNDEN is 1, the next-access delay period is determined by the SPND setting, and the delay period is 0 QSPCLK cycle when SPNDEN is 0.

(4) Clock delay period according to the SPCMD1 setting. The clock delay period depends on the SCKDEN bit setting in SPCMD1. When SCKDEN is 1, the clock delay period is determined by the SPCKD setting, and the delay period is 0 QSPCLK cycle when SCKDEN is 0.

(5) QSSL negation delay period according to the SPCMD1 setting. The setting must be made so that the delay period should be at least one QSPCLK cycle for the last transfer in the burst transfer. Since SSLKP in SPCMD1 is set to 0, QSSL is negated after QSSL negation delay period is over.

(6) Next-access delay period according to the SPCMD1 setting. The setting must be made so that the delay period should be at least one QSPCLK cycle for the last transfer in the burst transfer. Be sure to set SSLKP to 0 to negate QSSL.

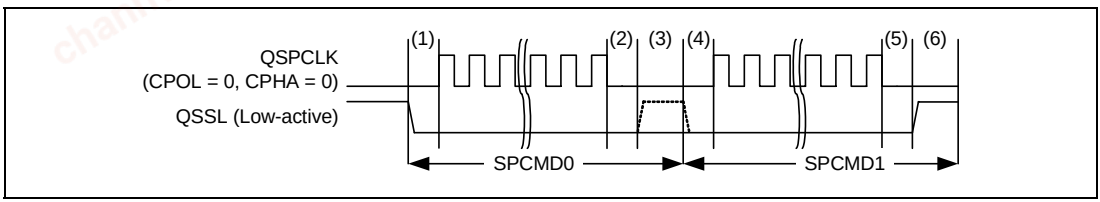

Figure 18.13 Burst Transfer Example in which QSSL Signal Level Keeping Function is Used (Single-SPI Mode)

chanhvinh.com

Note the following when specifying a burst transfer using this method.

Periods (2) to (4) must be inserted without fail when changing the clock frequency division ratio or clock polarity through command update.

When the clock frequency division ratio is changed, period (4) may be advanced or delayed with respect to the set value.

At least period (2) must be inserted when changing the clock phase or transfer mode (single-/dual-/quad-SPI) through command update (changing dual-/quad-SPI includes changing read/write operation).

(e) Initialization Flowchart

Figure 18.14 is a flowchart illustrating an example of initialization in SPI operation when this module is used in single-SPI mode. For a description of how to set up the interrupt controller and direct memory access controller, see the descriptions given in the individual blocks.

chanhvinh.com

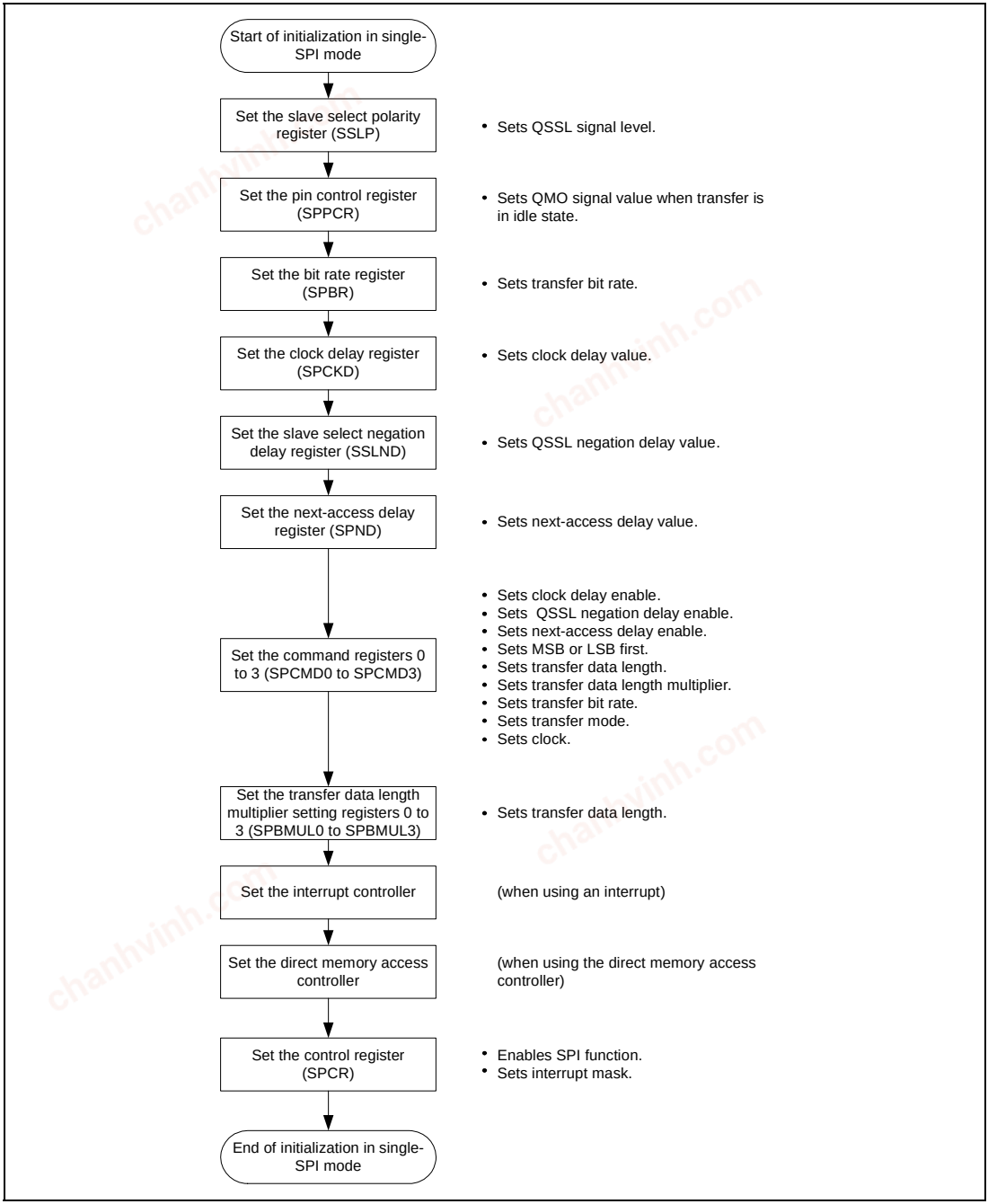

Figure 18.14 Example of Initialization Flowchart in Single-SPI Mode

chanhvinh.com

(f) Transfer Operation Flowchart

Figure 18.15 is a flowchart illustrating a transfer in SPI operation when this module is used in single-SPI mode. Burst transfer by setting the transfer data length is also executed based on this flowchart.

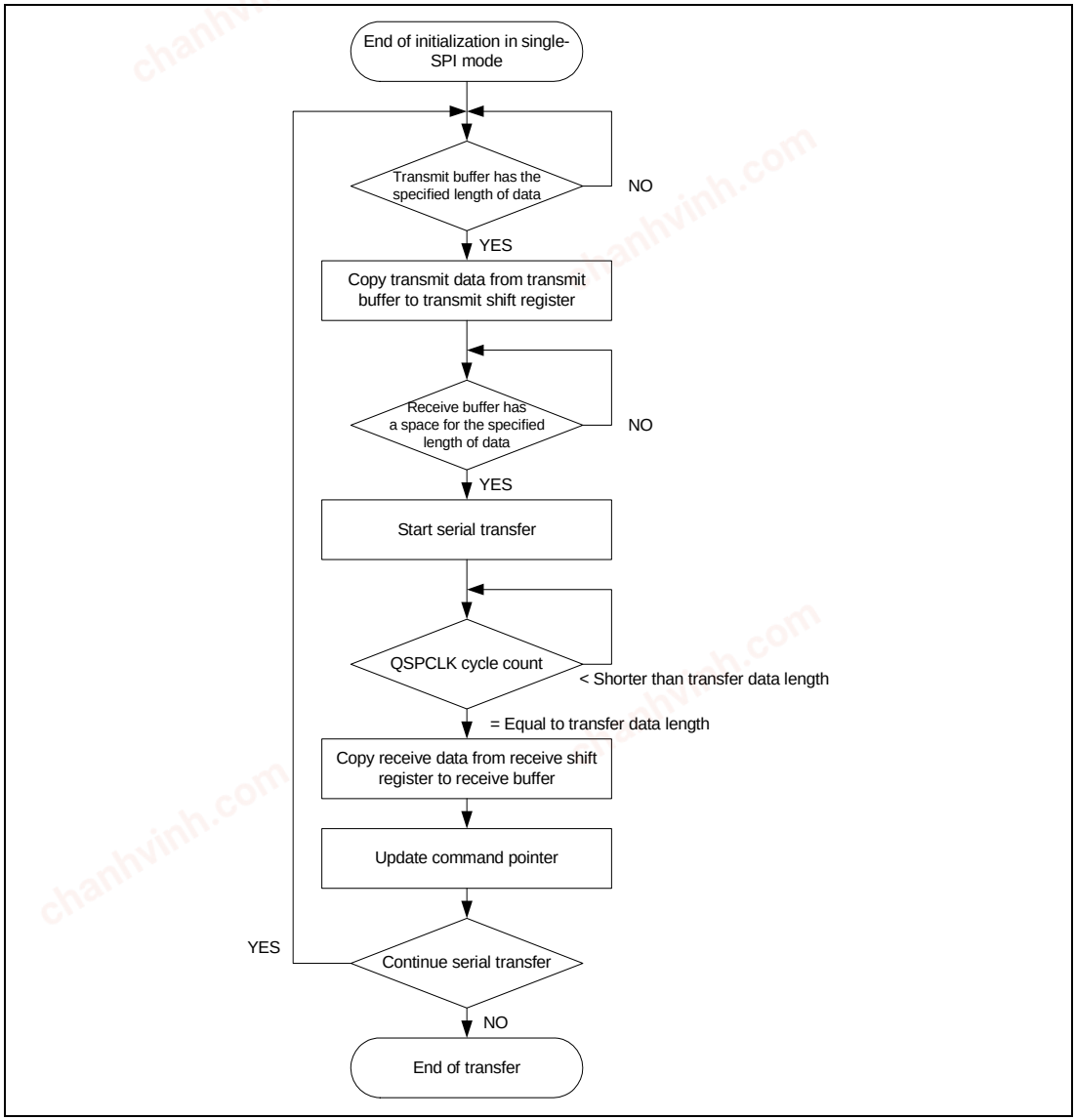

Figure 18.15 Transfer Operation Flowchart in Single-SPI Mode

chanhvinh.com

(2) Dual-SPI/Quad-SPI Mode

(a) Starting Serial Transfer

In dual-/quad-SPI modes, the serial transfer start condition is different depending on the data transfer direction (transmission or reception).

In data transmission, the serial transfer start condition is that there is the specified length of data in the transmit buffer.

In data reception, the serial transfer start condition is that there is a space for the specified length of data in the receive buffer.

(b) Terminating Serial Transfer

Irrespective of data transmission or reception, this module terminates the serial transfer after transmitting an QSPCLK edge corresponding to the final sampling timing.

During idle cycles in dual-/quad-SPI modes, the IO pins are controlled differently depending on whether it is after write or read operation. Specifically, the IO pins output either the last output data or the fixed level depending on the register setting after write operation, whereas the IO pins are driven to the Hi-Z state after read operation. Figure 18.16 shows an example of the pin states after quad-SPI mode access is completed. The following describes operations (1) and (2) in the figure.

(1) During write operation, QIO0 to QIO3 serve as output pins. Thus, when QSSL is negated upon completion of write operation, QIO0 to QIO3 output different values depending on the value of MOIFE in the SPPCR. Specifically, the IO pins output the level specified by MOIFV when MOIFE is 1, whereas the IO pins output the last output data when MOIFE is 0.

(2) During read operation, QIO0 to QIO3 serve as input pins. Thus, when QSSL is negated upon completion of read operation, QIO0 to QIO3 are driven to Hi-Z state irrespective of the values of MOIFE and MOIFV.

For details on the pin control in dual-/quad-SPI modes, see section 18.4.2, Pin Control.

chanhvinh.com

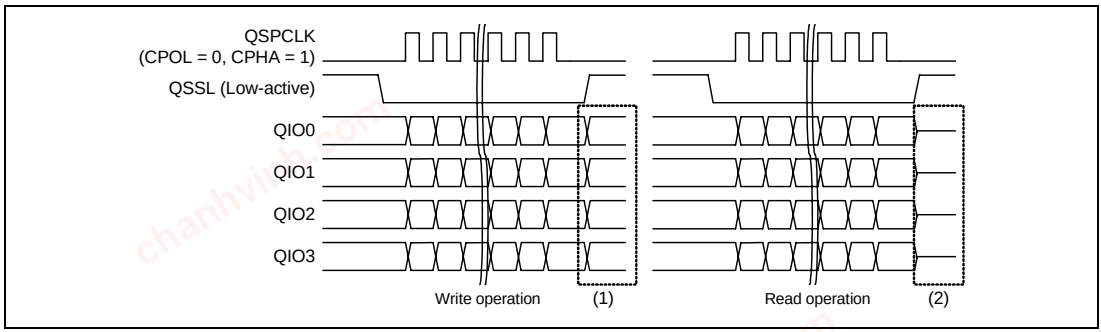

Figure 18.16 Example of Pin States after Quad-SPI Mode Access is Completed

(c) Sequence Control

As with the single-SPI mode, in dual-/quad-SPI modes, according to the sequence length that is assigned to SPSCR, this module makes up a sequence comprised of SPCMD0 to SPCMD3 and SPBMUL0 to SPBMUL3. For details on operation, see section 18.4.7 (1) (c), Sequence Control.

Dual-/quad-SPI modes only provide operation of a single direction, that is, either transmission or reception for serial transfer. Transmission or reception is set using the SPI read/write access setting bit (SPRW) in SPCMD0 to SPCMD3. One of the three operating modes including dual-SPI mode, quad-SPI mode, and single-SPI mode is set using the SPI operating mode setting bits (SPIMOD[1:0]) in SPCMD0 to SPCMD3. Combining these bits allow switching single-SPI mode, dual-SPI mode transmission/reception, and quad-SPI mode transmission/reception to control sequence. Figure 18.17 shows an example of sequence configuration with transfer mode switching.

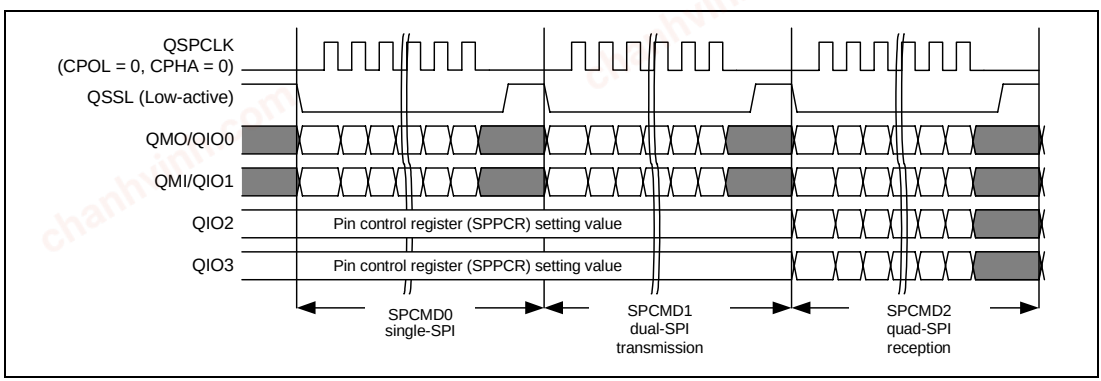

Figure 18.17 Example of Sequence Configuration with Transfer Mode Switching

chanhvinh.com

Note the following when configuring a sequence in dual-/quad-SPI modes.

When all the commands configuring a sequence are dual-/quad-SPI read operations, the sequential operation is continued as long as the receive buffer has an enough space for the receive data.

To terminate read operation, clear the SPE bit to 0 in SPCR after receiving the required length of data, or execute write operation for the last sequence to empty the transmit buffer.

(d) Burst Transfer

This module can execute burst transfer with the following two methods in dual/quad SPI modes.

One method uses the SPB[3:0] bits in SPCMD0 to SPCMD3 and SPBMUL0 to SPBMUL3. As with the single-SPI mode, setting SPB[3:0] to select 8, 16, or 32 bits and setting SPBMUL0 to SPBMUL3 to select one through 4,294,967,296 allows the specified length of data to be continuously transferred for the specified times, where the length is specified by SPB[3:0] and the number of times is specified by SPBMUL0 to SPBMUL3. However, if the transmit buffer (SPTXB) becomes empty during transfer, or the receive buffer (SPRXB) has no longer a space enough to receive the specified length of data defined by SPB[3:0], the clock is stopped until transfer is resumed. This method is effective to transfer a large amount of data in dual-/quad SPI modes. Figure 18.18 shows a burst transfer example in which SPB[3:0] are set to select 32 bits and SPBMUL to select four times thus specifying 128 bits as a total transfer data amount. The following describes operations (1) to (4) in the figure.

(1) First 32-bit data transfer

(2) Second 32-bit data transfer

(3) When the transmit buffer becomes empty or the receive buffer has no longer a space for 32 or more bits, the clock is stopped. Here, when QIO3 to QIO0 serve as output pins, QIO3 to QIO0 continue outputting the previous value. When QIO3 to QIO0 serve as input pins, the inputs to QIO3 to QIO0 depend on the output value of the device to communicate with. When data is written to the transmit buffer or an enough space is created in the receive buffer, the clock output is resumed to restart transfer.

(4) Third and fourth 32-bit data transfer

chanhvinh.com

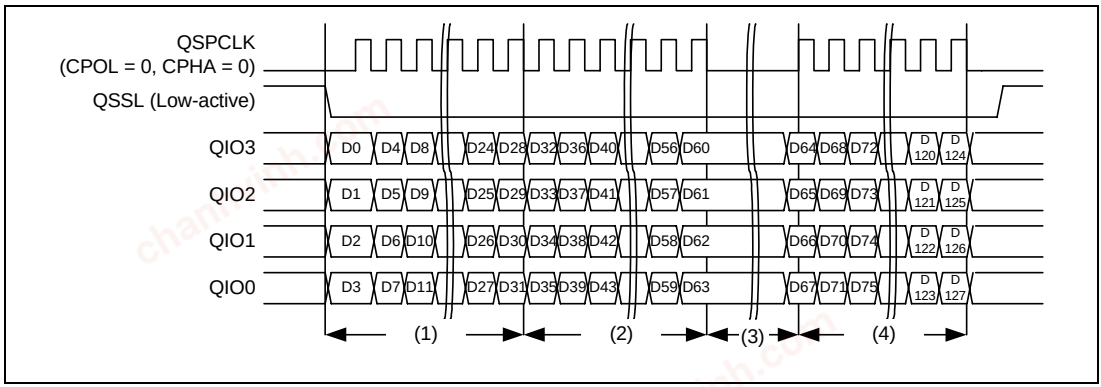

Figure 18.18 Burst Transfer Example in which Total Transfer Data Amount is 128 Bits (Quad-SPI Mode)

The other method uses the QSSL signal level keeping function as in single-SPI mode. Since this method allows switching the SPI transfer modes (single-/dual-/quad-SPI) during a transfer, it is particularly convenient when used with serial flash memory, where command data is written in single-SPI mode and data to be stored in memory is written in quad-SPI mode. Note, however, that at least one delay cycle should be inserted between transfers when switching the SPI transfer modes. Figure 18.19 shows a burst transfer example in which both single-SPI and quad-SPI modes are used. The following describes operations (1) to (6) in the figure.

(1) Clock delay period according to the SPCMD0 setting. The setting must be made so that the delay period should be at least 1.5 QSPCLK cycles for the first transfer in the burst transfer.

(2) QSSL negation delay period according to the SPCMD0 setting. Since SSLKP in SPCMD0 is set to 1, QSSL is not negated even after QSSL negation delay period is over. The QSSL negation delay period depends on the SLNDEN bit setting in SPCMD0. When SLNDEN is 1, the QSSL negation delay period is determined by the SSLND setting, and the delay period is 0 QSPCLK cycle when SLNDEN is 0.

(3) Next-access delay period according to the SPCMD0 setting. Since SSLKP is set to 1, QSSL is not negated even during the next-access delay period. The next-access delay period depends on the SPNDEN bit setting in SPCMD0. When SPNDEN is 1, the next-access delay period is determined by the SPND setting, and the delay period is 0 QSPCLK cycle when SPNDEN is 0. Up to this period, the data pin is driven according to the SPCMD0 setting.

(4) Clock delay period according to the SPCMD1 setting. The clock delay period depends on the SCKDEN bit setting in SPCMD1. When SCKDEN is 1, the clock delay period is determined by the SPCKD setting, and the delay period is 0 QSPCLK cycle when SCKDEN is 0.

chanhvinh.com

(5) QSSL negation delay period according to the SPCMD1 setting. The setting must be made so that the delay period should be at least one QSPCLK cycle for the last transfer in the burst transfer. Since SSLKP in SPCMD1 is set to 0, QSSL is negated after QSSL negation delay period is over.

(6) Next-access delay period according to the SPCMD1 setting. The setting must be made so that the delay period should be at least one QSPCLK cycle for the last transfer in the burst transfer. Be sure to set SSLKP to 0 to negate QSSL.

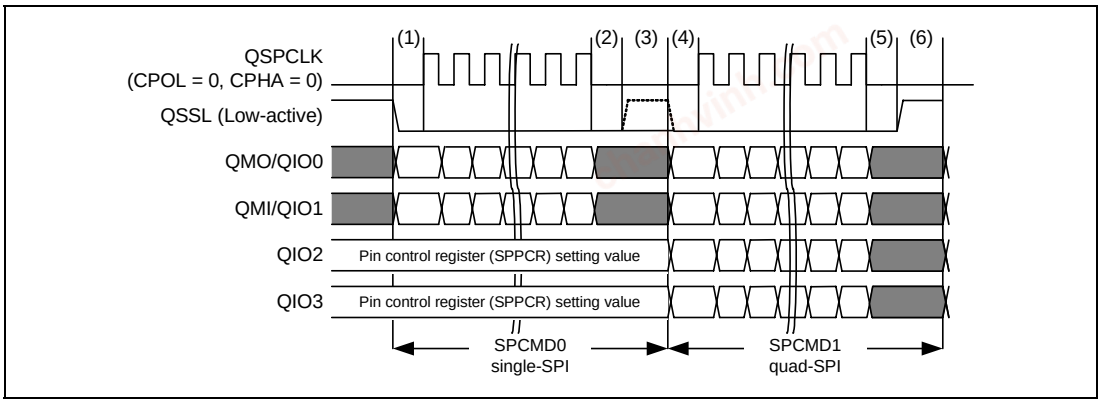

Figure 18.19 Burst Transfer Example in which QSSL Signal Level Keeping Function is Used (Single- and Quad-SPI Modes Used)

Note the following when specifying a burst transfer using this method.

Periods (2) to (4) must be inserted without fail when changing the clock frequency division ratio or clock polarity through command update.

When the clock frequency division ratio is changed, period (4) may be advanced or delayed with respect to the set value.

At least period (2) must be inserted when changing the clock phase or transfer mode (single-/dual-/quad-SPI) through command update (changing dual-/quad-SPI includes changing read/write operation).

(e) Initialization Flowchart

Figure 18.20 is a flowchart illustrating an example of initialization in SPI operation when this module is used in dual-/quad-SPI mode. For a description of how to set up the interrupt controller and direct memory access controller, see the descriptions given in the individual blocks.

chanhvinh.com

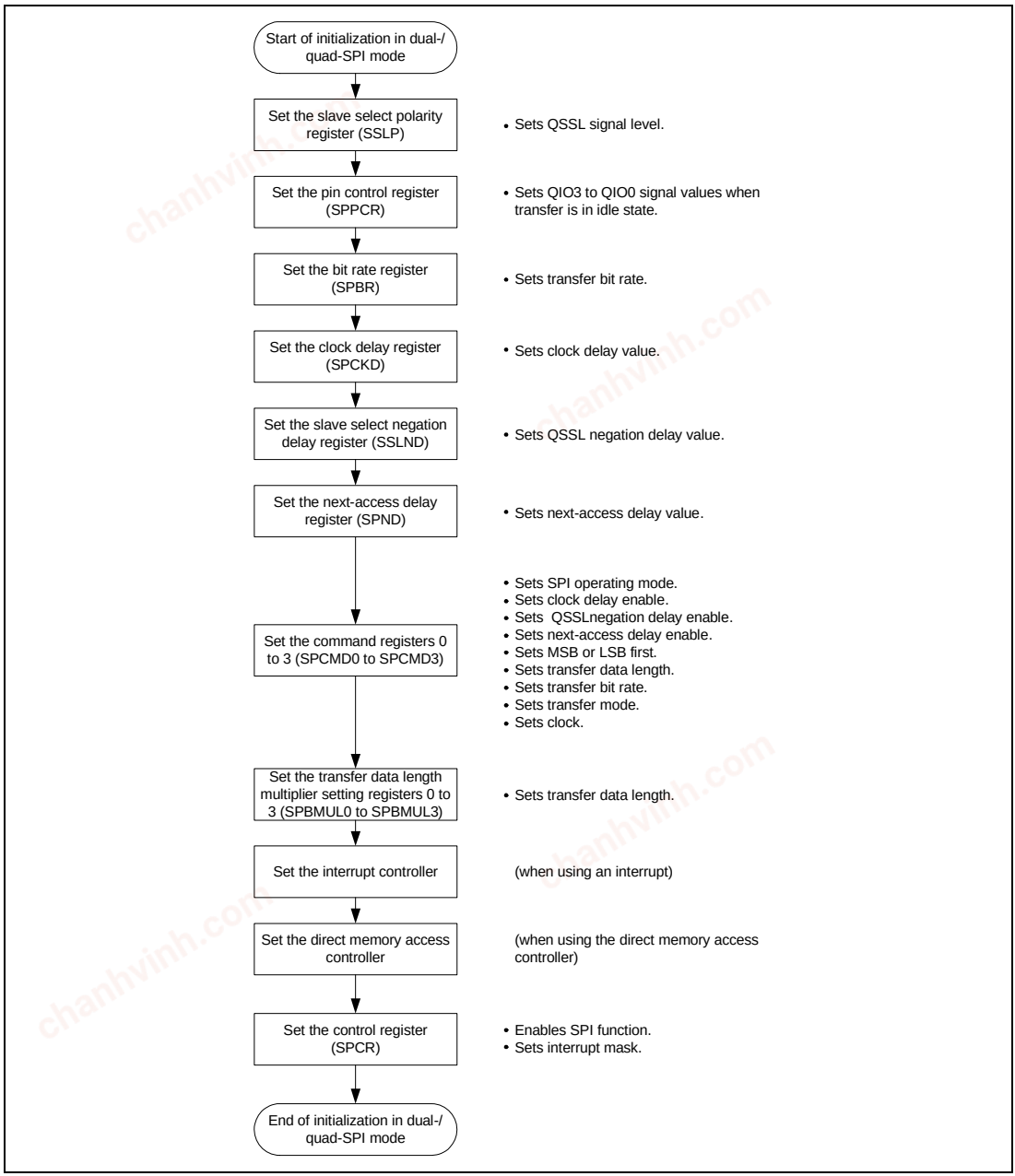

Figure 18.20 Example of Initialization Flowchart in Dual-/Quad-SPI Mode

chanhvinh.com

(f) Transfer Operation Flowchart

Figure 18.21 is a flowchart illustrating a transfer in SPI operation when this module is used in dual-/quad-SPI mode.

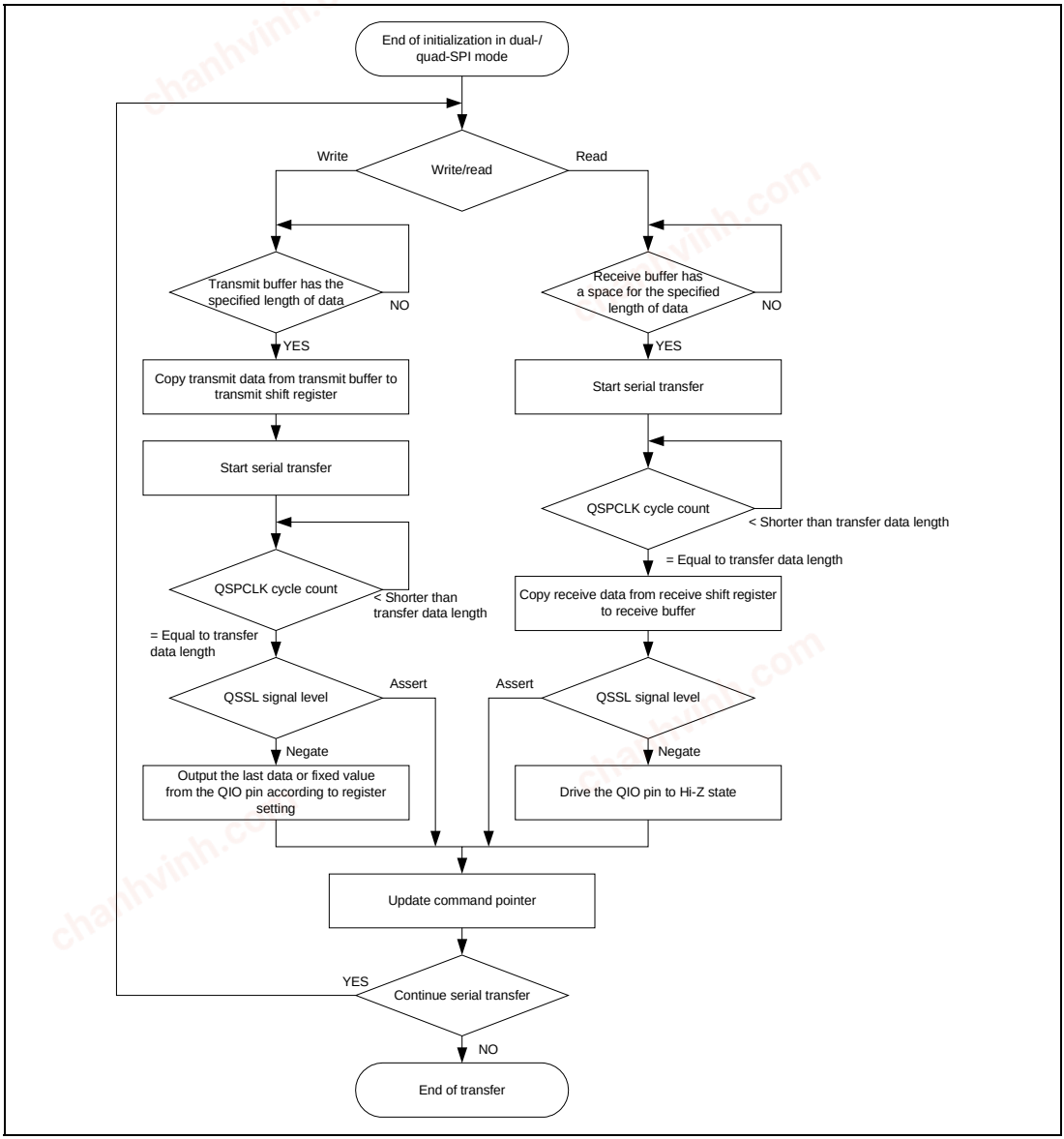

Figure 18.21 Transfer Operation Flowchart in Dual-/Quad-SPI Mode

chanhvinh.com

18.4.8 Interrupt Sources

This module has interrupt sources of receive buffer full and transmit buffer empty. In addition, the direct memory access controller can be activated by the receive buffer full or transmit buffer empty interrupt for data transfer.

Table 18.9 shows the interrupt sources.

When any of the interrupt conditions in table 18.9 is met, an interrupt is generated. The interrupt sources should be cleared with data transfer by the CPU or direct memory access controller.

Table 18.9 Interrupt Sources

Name	Interrupt Source	Abbreviation	Interrupt Condition	Activation of Direct Memory Access Controller
SPRI	Receive buffer full	RXI	(SPRIE = 1) • (SPRFF = 1)	Possible
SPTI	Transmit buffer empty	TXI	(SPTIE = 1) • (SPTEF = 1)	Possible

chanhvinh.com

18.4.9 Loopback Mode

This module provides loopback mode for testing. Writing 1 to the loopback mode bit (SPLP) in the pin control register (SPPCR) enables loopback mode. In loopback mode, this module disconnects the paths between the transmit/receive shift registers and the QMI/QMO and QIO3 to QIO0 pins, and connects the outputs from the transmit shift register to the inputs to the receive shift register instead. Figure 18.22 shows a schematic internal connection in loopback mode.

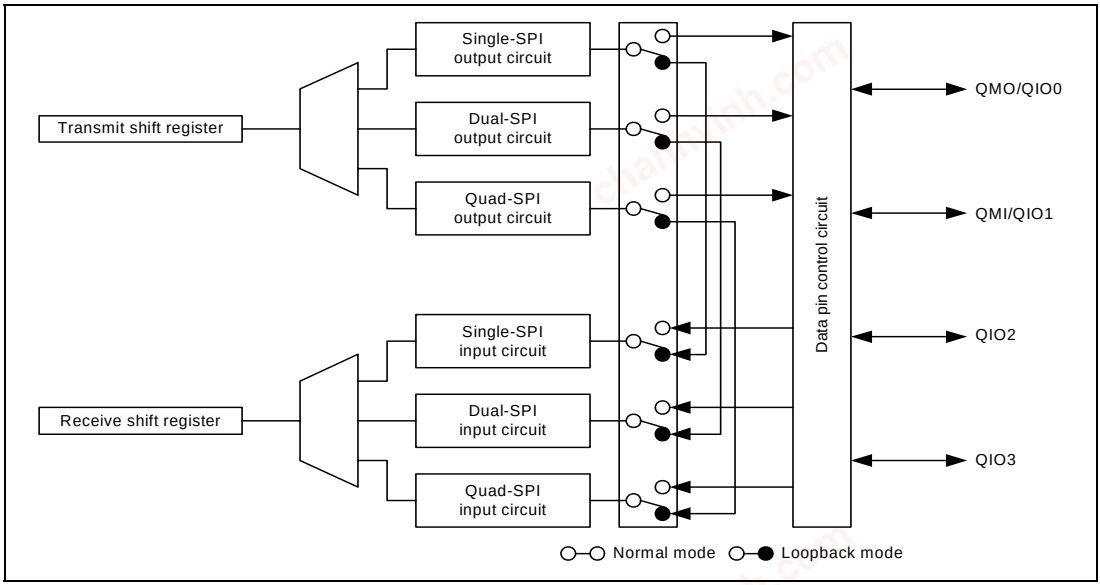

Figure 18.22 Schematic Internal Connection in Loopback Mode

chanhvinh.com

Section 19 SPI Multi I/O Bus Controller

The SPI multi I/O bus controller outputs control signals to the serial flash memory connected to the SPI multi I/O bus space, thus enabling direct connection of the serial flash memory.

19.1 Features

This module allows the connected serial flash memory to be accessed by directly reading the SPI multi I/O bus space, or using SPI mode to transmit and receive data.

- Serial Flash Memory Interface
  Up to two serial flash memories can be connected.
  A data bus size of 1 bit, 2 bits, or 4 bits can be selected for one serial flash memory device.
- External Address Space Read Mode
  A maximum of 8-Gbyte address space is supported (when two serial flash memories are connected)
  The SPBSSL pin can be automatically controlled through access address monitoring
  Efficient data reception due to built-in read cache (64-bit line × 16 entries)
- SPI Operating Mode
  Desired read/write access to serial flash memory possible
- Bit rate
  SPBCLK is generated by frequency division of Bϕ by internal baud rate generator
  SPBCLK frequency division ratio can only be set to 2
- SPBSSL Pin Control
  Delay from SPBSSL signal assertion to SPBCLK operation (clock delay) can be set
  Range: 1 to 8 SPBCLK cycles (set in SPBCLK-cycle units)
  SPBSSL polarity can be changed

chanhvinh.com

19.2 Block Diagram

Figure 19.1 shows a block diagram of this module.

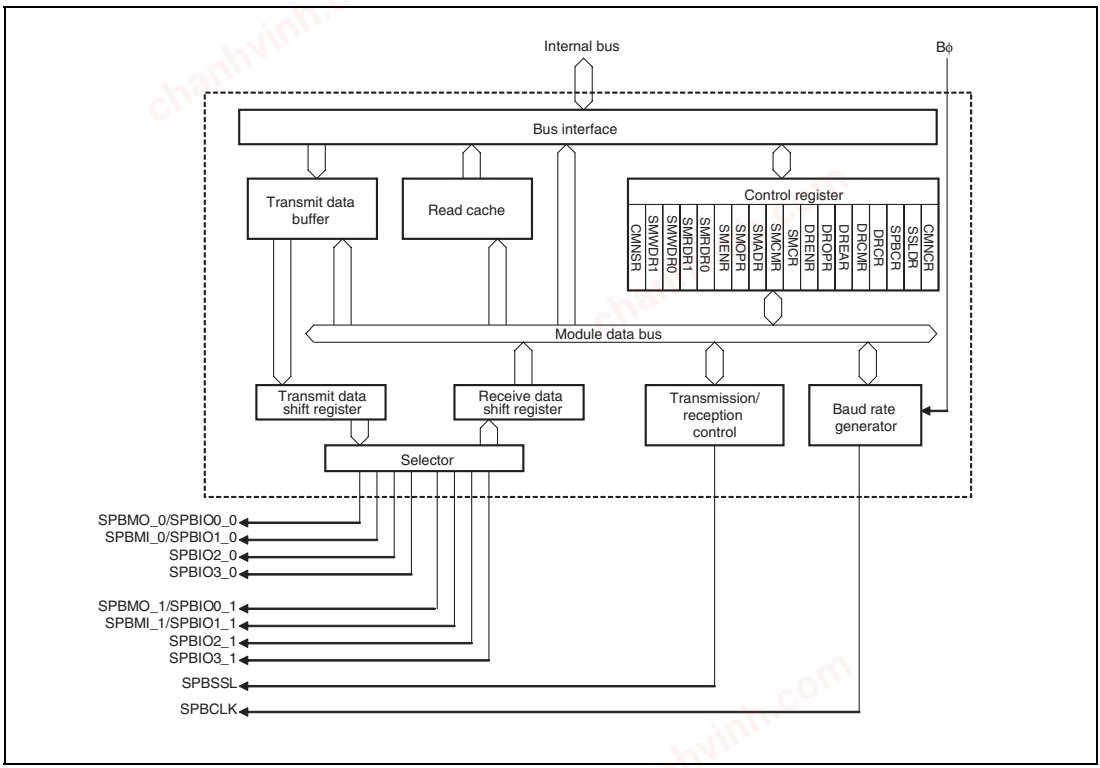

Figure 19.1 Block Diagram

chanhvinh.com

19.3 Input/Output Pins

Table 19.1 shows the pin configuration.

Table 19.1 Pin Configuration

Channel	Pin Name	Symbol	I/O	Function
Common	Clock pin	SPBCLK	Output	Clock output
	Slave select pin	SPBSSL	Output	Slave selection
0	Data 0 pin	SPBMO_0/ SPBIO0_0	I/O	Master transmit data/data 0
	Data 1 pin	SPBMI_0/ SPBIO1_0	I/O	Master input data/data 1
	Data 2 pin	SPBIO2_0	I/O	Data 2
	Data 3 pin	SPBIO3_0	I/O	Data 3
1	Data 0 pin	SPBMO_1/ SPBIO0_1	I/O	Master transmit data/data 0
	Data 1 pin	SPBMI_1/ SPBIO1_1	I/O	Master input data/data 1
	Data 2 pin	SPBIO2_1	I/O	Data 2
	Data 3 pin	SPBIO3_1	I/O	Data 3

chanhvinh.com

19.4 Register Descriptions

Table 19.2 shows the register configuration.

Table 19.2 Register Configuration

Register Name	Abbreviation	R/W	Initial Value	Address	Access Size
Common control register	CMNCR	R/W	H'00AA4000	H'FFFC1C00	32
SSL delay register	SSLDR	R/W	H'00000000	H'FFFC1C04	32
Bit rate register	SPBCR	R/W	H'00000003	H'FFFC1C08	32
Data read control register	DRCR	R/W	H'00000000	H'FFFC1C0C	32
Data read command setting register	DRCMR	R/W	H'00000000	H'FFFC1C10	32
Data read extended address setting register	DREAR	R/W	H'00000000	H'FFFC1C14	32
Data read option setting register	DROPR	R/W	H'00000000	H'FFFC1C18	32
Data read enable setting register	DRENR	R/W	H'00004700	H'FFFC1C1C	32
SPI mode control register	SMCR	R/W	H'00000000	H'FFFC1C20	32
SPI mode command setting register	SMCMR	R/W	H'00000000	H'FFFC1C24	32
SPI mode address setting register	SMADR	R/W	H'00000000	H'FFFC1C28	32
SPI mode option setting register	SMOPR	R/W	H'00000000	H'FFFC1C2C	32
SPI mode enable setting register	SMENR	R/W	H'00004000	H'FFFC1C30	32
SPI mode read data register 0	SMRDR0	R	Undefined	H'FFFC1C38	8, 16, 32
SPI mode read data register 1	SMRDR1	R	Undefined	H'FFFC1C3C	8, 16, 32
SPI mode write data register 0	SMWDR0	R/W	H'00000000	H'FFFC1C40	8, 16, 32
SPI mode write data register 1	SMWDR1	R/W	H'00000000	H'FFFC1C44	8, 16, 32
Common status register	CMNSR	R	H'00000001	H'FFFC1C48	32

chanhvinh.com

19.4.1 Common Control Register (CMNCR)

CMNCR is a 32-bit register that controls the SPI multi I/O bus controller. The settings of this register are reflected both in external address space read mode and SPI operating mode.

The settings of this register should be changed when the SSLF flag in CMNSR is 0; otherwise, the operation cannot be guaranteed.

Bit:	31	30	29	28	27	26	25	24	23	22	21	20	19	18	17	16
	MD	-	-	-	-	-	-	-	MOIIO3[1:0]		MOIIO2[1:0]		MOIIO1[1:0]		MOIIO0[1:0]	
Initial value:	0	0	0	0	0	0	0	0	1	0	1	0	1	0	1	0
R/W:	R/W	R	R	R	R	R	R	R	R/W	R/W	R/W	R/W	R/W	R/W	R/W	R/W

Bit:	15	14	13	12	11	10	9	8	7	6	5	4	3	2	1	0
	IO3FV[1:0]		IO2FV[1:0]		-	-	IO0FV[1:0]		-	CPHAT	CPHAR	SSLP	CPOL	-	BSZ[1:0]	
Initial value:	0	1	0	0	0	0	0	0	0	0	0	0	0	0	0	0
R/W:	R/W	R/W	R/W	R/W	R	R	R/W	R/W	R	R/W	R/W	R/W	R/W	R	R/W	R/W

Bit	Bit Name	Initial Value	R/W	Description
31	MD	0	R/W	Operating Mode Switch Switches the operating modes. 0: External address space read mode 1: SPI operating mode
30 to 24	—	All 0	R	Reserved These bits are always read as 0. The write value should always be 0.
23, 22	MOIIO3[1:0]	10	R/W	SPBSSL Output Idle Value Fix SPBIO3_0, SPBIO3_1 Fixes output values of SPBIO3_0 and SPBIO3_1 in SPBSSL negation period. 00: Output value 0 01: Output value 1 10: Output value is the last bit value of the previous transfer (Hi-Z, if Hi-Z was the last bit value of the previous transfer). 11: Output value Hi-Z

chanhvinh.com

Bit	Bit Name	Initial Value	R/W	Description
21, 20	MOIIO2[1:0]	10	R/W	SPBSSL Output Idle Value Fix SPBIO2_0, SPBIO2_1 Fixes output values of SPBIO2_0 and SPBIO2_1 in SPBSSL negation period. 00: Output value 0 01: Output value 1 10: Output value is the last bit value of the previous transfer (Hi-Z, if Hi-Z was the last bit value of the previous transfer). 11: Output value Hi-Z
19, 18	MOIIO1[1:0]	10	R/W	SPBSSL Output Idle Value Fix SPBIO1_0, SPBIO1_1 Fixes output values of SPBIO1_0 and SPBIO1_1 in SPBSSL negation period. 00: Output value 0 01: Output value 1 10: Output value is the last bit value of the previous transfer (Hi-Z, if Hi-Z was the last bit value of the previous transfer). 11: Output value Hi-Z
17, 16	MOIIO0[1:0]	10	R/W	SPBSSL Output Idle Value Fix SPBIO0_0, SPBIO0_1 Fixes output values of SPBIO0_0 and SPBIO0_1 in SPBSSL negation period. 00: Output value 0 01: Output value 1 10: Output value is the last bit value of the previous transfer (Hi-Z, if Hi-Z was the last bit value of the previous transfer). 11: Output value Hi-Z

chanhvinh.com

Bit	Bit Name	Initial Value	R/W	Description
15, 14	IO3FV[1:0]	01	R/W	SPBIO3_0, SPBIO3_1 Fixed Value for 1-bit/2-bit Size Fixes the output value of SPBIO3_0 and SPBIO3_1 pins for 1-bit/2-bit size. 00: Output value 0 01: Output value 1 10: Output value is the last bit value of the previous transfer (Hi-Z, if Hi-Z was the last bit value of the previous transfer). 11: Output value Hi-Z
13, 12	IO2FV[1:0]	00	R/W	SPBIO2_0, SPBIO2_1 Fixed Value for 1-bit/2-bit Size Fixes the output value of SPBIO2_0 and SPBIO2_1 pins for 1-bit/2-bit size. 00: Output value 0 01: Output value 1 10: Output value is the last bit value of the previous transfer (Hi-Z, if Hi-Z was the last bit value of the previous transfer). 11: Output value Hi-Z
11, 10	—	All 0	R	Reserved These bits are always read as 0. The write value should always be 0.
9, 8	IO0FV[1:0]	00	R/W	SPBIO0_0, SPBIO0_1 Fixed Value for 1-bit Size Input Fixes the output value of SPBIO0_0 and SPBIO0_1 pins for 1-bit size input. 00: Output value 0 01: Output value 1 10: Output value is the last bit value of the previous transfer (Hi-Z, if Hi-Z was the last bit value of the previous transfer). 11: Output value Hi-Z
7	—	0	R	Reserved This bit is always read as 0. The write value should always be 0.

chanhvinh.com

Bit	Bit Name	Initial Value	R/W	Description
6	CPHAT	0	R/W	Output Shift Sets the SPBCLK edge of the output data. CPHAT and CPHAR should be set according to the description of CPHAR. 0: Data transmission at even edge 1: Data transmission at odd edge
5	CPHAR	0	R/W	Input Latch Sets the SPBCLK edge of the reception data. CPHAT and CPHAR should be set according to the following table. 0: Data reception at odd edge 1: Data reception at even edge CPHAT and CPHAR Setting CPHAT COHAR 0 0 Setting enabled 0 1 Setting enabled 1 0 Setting prohibited 1 1 Setting enabled
4	SSLP	0	R/W	SPBSSL Signal Polarity Sets the polarity of SPBSSL signal. 0: Active low SPBSSL signal 1: Active high SPBSSL signal
3	CPOL	0	R/W	SPBSSL Negation Period SPBCLK Output Direction Sets the SPBCLK output direction during SPBSSL negation period. 0: SPBCLK output is 0 during SPBSSL negation period. 1: SPBCLK output is 1 during SPBSSL negation period.
2	—	0	R	Reserved This bit is always read as 0. The write value should always be 0.

chanhvinh.com

Bit	Bit Name	Initial Value	R/W	Description
1, 0	BSZ[1:0]	00	R/W	Data Bus Size Specifies the number of serial flash memories to be connected. 00: 1 memory 01: 2 memories 1X: Setting prohibited Note: After changing (the value of) this bit, all the entries in the read cache must be cleared by setting the RCF bit in DRCR to 1.

chanhvinh.com

19.4.2 SSL Delay Register (SSLDR)

SSLDR is a 32-bit register that adjusts the timing between the SPBSSL signal and the SPBCLK signal.

The settings of this register are reflected both in external address space read mode and SPI operating mode.

The settings of this register should be changed when the SSLF flag in CMNSR is 0; otherwise, the operation cannot be guaranteed.

Bit:	31	30	29	28	27	26	25	24	23	22	21	20	19	18	17	16
	-	-	-	-	-	-	-	-	-	-	-	-	-	SPNDL[2:0]		
Initial value:	0	0	0	0	0	0	0	0	0	0	0	0	0	0	0	0
R/W:	R	R	R	R	R	R	R	R	R	R	R	R	R	R/W	R/W	R/W

Bit:	15	14	13	12	11	10	9	8	7	6	5	4	3	2	1	0
	-	-	-	-	-	SLNDL[2:0]			-	-	-	-	-	SCKDL[2:0]		
Initial value:	0	0	0	0	0	0	0	0	0	0	0	0	0	0	0	0
R/W:	R	R	R	R	R	R/W	R/W	R/W	R	R	R	R	R	R/W	R/W	R/W

Bit	Bit Name	Initial Value	R/W	Description
31 to 19	—	All 0	R	Reserved These bits are always read as 0. The write value should always be 0.
18 to 16	SPNDL[2:0]	000	R/W	Next Access Delay Sets the period from transfer end to next transfer start (next access). 000: 1 SPBCLK cycle Other than above: Setting prohibited
15 to 11	—	All 0	R	Reserved These bits are always read as 0. The write value should always be 0.
10 to 8	SLNDL[2:0]	000	R/W	SPBSSL Negation Delay Sets the period from the time the last SPBCLK edge is sent of a transfer to SPBSSL pin negation (SPBSSL negation delay). 000: 1.5 SPBCLK cycles Other than above: Setting prohibited

chanhvinh.com

Bit	Bit Name	Initial Value	R/W	Description
7 to 3	—	All 0	R	Reserved These bits are always read as 0. The write value should always be 0.
2 to 0	SCKDL[2:0]	000	R/W	Clock Delay Sets the period from SPBSSL pin assertion to SPBCLK oscillation (clock delay). 000: 1 SPBCLK cycle 001: 2 SPBCLK cycles 010: 3 SPBCLK cycles 011: 4 SPBCLK cycles 100: 5 SPBCLK cycles 101: 6 SPBCLK cycles 110: 7 SPBCLK cycles 111: 8 SPBCLK cycles

chanhvinh.com

19.4.3 Bit Rate Register (SPBCR)

SPBCR is a 32-bit register that sets the bit rate.

The settings of this register are reflected both in external address space read mode and SPI operating mode.

The settings of this register should be changed when the SSLF flag in CMNSR is 0; otherwise, the operation cannot be guaranteed.

Bit:	31	30	29	28	27	26	25	24	23	22	21	20	19	18	17	16
	-	-	-	-	-	-	-	-	-	-	-	-	-	-	-	-
Initial value:	0	0	0	0	0	0	0	0	0	0	0	0	0	0	0	0
R/W:	R	R	R	R	R	R	R	R	R	R	R	R	R	R	R	R

Bit:	15	14	13	12	11	10	9	8	7	6	5	4	3	2	1	0
	SPBR[7:0]								-	-	-	-	-	-	BRDV[1:0]	
Initial value:	0	0	0	0	0	0	0	0	0	0	0	0	0	0	1	1
R/W:	R/W	R/W	R/W	R/W	R/W	R/W	R/W	R/W	R	R	R	R	R	R	R/W	R/W

Bit	Bit Name	Initial Value	R/W	Description
31 to 16	—	All 0	R	Reserved These bits are always read as 0. The write value should always be 0.
15 to 8	SPBR[7:0]	All 0	R/W	Bit Rate Sets the bit rate. The bit rate is determined by a combination of these bits with the BRDV[1:0] bits. For details, see table 19.3, Relationship between SPBR[7:0] and BRDV[1:0] Settings.
7 to 2	—	All 0	R	Reserved These bits are always read as 0. The write value should always be 0.
1, 0	BRDV[1:0]	11	R/W	Bit Rate Frequency Division Sets the bit rate. The bit rate is determined by a combination of these bits with the SPBR[7:0] bits. The SPBR value is used to set the base bit rate. The BRDV value is used to select a division ratio of the base bit rate from among no division and 2. 00: Base bit rate 01: Base bit rate divided by 2 Other than above: Setting prohibited

chanhvinh.com

(1) Bit Rate

SPBR[7:0] and BRDV[1:0] are used for setting the bit rate. Setting the division ratio to 2 is only enabled.

Table 19.3 Relationship between SPBR[7:0] and BRDV[1:0] Settings

			Bit Rate	
SPBR[7:0]	**BRDV[1:0]**	**Division Ratio**	**Bϕ = 66.67 MHz**	**Bϕ = 133.33 MHz**
0	1	2	33.33 Mbps	66.66 Mbps
1	0	2	33.33 Mbps	66.66 Mbps

chanhvinh.com

19.4.4 Data Read Control Register (DRCR)

DRCR is a 32-bit register that sets the operation in external address space read mode.

The bits should be changed when the SSLF flag in CMNSR is 0; otherwise, the operation cannot be guaranteed.

Bit:	31	30	29	28	27	26	25	24	23	22	21	20	19	18	17	16
	-	-	-	-	-	-	-	-	-	-	-	-	RBURST[3:0]			
Initial value:	0	0	0	0	0	0	0	0	0	0	0	0	0	0	0	0
R/W:	R	R	R	R	R	R	R	R	R	R	R	R	R/W	R/W	R/W	R/W

Bit:	15	14	13	12	11	10	9	8	7	6	5	4	3	2	1	0
	-	-	-	-	-	-	RCF	RBE	-	-	-	-	-	-	-	SSLE
Initial value:	0	0	0	0	0	0	0	0	0	0	0	0	0	0	0	0
R/W:	R	R	R	R	R	R	W	R/W	R	R	R	R	R	R	R	R/W

Bit	Bit Name	Initial Value	R/W	Description
31 to 20	—	All 0	R	Reserved These bits are always read as 0. The write value should always be 0.
19 to 16	RBURST [3:0]	0000	R/W	Read Data Burst Length Sets the burst length (data unit count) when reading. This bit is enabled when the RBE bit is set to 1. 0000: 1 data unit 0001: 2 continuous data units : 1110: 15 continuous data units 1111: 16 continuous data units One data unit is 64 bits long.
15 to 10	—	All 0	R	Reserved These bits are always read as 0. The write value should always be 0.

chanhvinh.com

Bit	Bit Name	Initial Value	R/W	Description
9	RCF	0	W	Read Cache Flush When 1 is written to this bit, all the entries in the read cache are cleared. This bit is always read as 0. Note: After writing 1 to the RCF bit to clear the read cache, perform the external address space read after reading the contents of the DRCR register.
8	RBE	0	R/W	Read Burst Turns burst ON or OFF when reading. 0: Data is read according to the access size. 1: Read cache is enabled, and as many data units as the burst count specified in RBURST[3:0] bits is read.
7 to 1	—	All 0	R	Reserved These bits are always read as 0. The write value should always be 0.
0	SSLE	0	R/W	SPBSSL Negation Sets the conditions for SPBSSL negation during read burst. SPBSSL is negated for each access during normal read. 0: SPBSSL is negated after transfer of data set in burst length. 1: SPBSSL is negated when the accessed address is not continuous with the previously transferred address.

chanhvinh.com

19.4.5 Data Read Command Setting Register (DRCMR)

DRCMR is a 32-bit register that sets the commands issued in external address space read mode.

The settings of this register should be changed when the TEND flag in CMNSR is 1; otherwise, the operation cannot be guaranteed.

Bit:	31	30	29	28	27	26	25	24	23	22	21	20	19	18	17	16
	-	-	-	-	-	-	-	-	CMD[7:0]							
Initial value:	0	0	0	0	0	0	0	0	0	0	0	0	0	0	0	0
R/W:	R	R	R	R	R	R	R	R	R/W	R/W	R/W	R/W	R/W	R/W	R/W	R/W

Bit:	15	14	13	12	11	10	9	8	7	6	5	4	3	2	1	0
	-	-	-	-	-	-	-	-	OCMD[7:0]							
Initial value:	0	0	0	0	0	0	0	0	0	0	0	0	0	0	0	0
R/W:	R	R	R	R	R	R	R	R	R/W	R/W	R/W	R/W	R/W	R/W	R/W	R/W

Bit	Bit Name	Initial Value	R/W	Description
31 to 24	—	All 0	R	Reserved These bits are always read as 0. The write value should always be 0.
23 to 16	CMD[7:0]	H'00	R/W	Command Sets the command.
15 to 8	—	All 0	R	Reserved These bits are always read as 0. The write value should always be 0.
7 to 0	OCMD[7:0]	H'00	R/W	Optional Command Sets the optional command.

chanhvinh.com

19.4.6 Data Read Extended Address Setting Register (DREAR)

DREAR is a 32-bit register that sets the address when the serial flash address is output in 32-bit mode.

The settings of this register should be changed when the TEND flag in CMNSR is 1; otherwise, the operation cannot be guaranteed.

Bit:	31	30	29	28	27	26	25	24	23	22	21	20	19	18	17	16
	-	-	-	-	-	-	-	-	EAV[7:0]							
Initial value:	0	0	0	0	0	0	0	0	0	0	0	0	0	0	0	0
R/W:	R	R	R	R	R	R	R	R	R/W	R/W	R/W	R/W	R/W	R/W	R/W	R/W

Bit:	15	14	13	12	11	10	9	8	7	6	5	4	3	2	1	0
	-	-	-	-	-	-	-	-	-	-	-	-	-	EAC[2:0]		
Initial value:	0	0	0	0	0	0	0	0	0	0	0	0	0	0	0	0
R/W:	R	R	R	R	R	R	R	R	R	R	R	R	R	R/W	R/W	R/W

Bit	Bit Name	Initial Value	R/W	Description
31 to 24	—	All 0	R	Reserved These bits are always read as 0. The write value should always be 0.

chanhvinh.com

Bit	Bit Name	Initial Value	R/W	Description
23 to 16	EAV[7:0]	H'00	R/W	32-Bit Extended Upper Address Fixed Value Sets the upper address bit values of the external address specified by the EAC[2:0] bits when the serial flash address is output in 32-bit mode. Bit 0 corresponds to the serial flash address bit [25], and bit 7 corresponds to the bit [32]. This setting is valid when the ADE[3] bit in DRENR is 1. When EAC[2:0] are 000, serial flash address [32:25] fixed values should be set to EAV[7:0]. When EAC[2:0] are 001, serial flash address [32:26] fixed values should set to EAV[7:1]. (1) When BSZ[1:0] in CMNCR = 00 (one serial flash memory connected) Serial flash addresses [31:0] are used for accessing. (2) When BSZ[1:0] in CMNCR = 01 (two serial flash memories connected) Serial flash addresses [32:1] are used for accessing.
15 to 3	—	All 0	R	Reserved These bits are always read as 0. The write value should always be 0.
2 to 0	EAC[2:0]	000	R/W	32-Bit Extended External Address Valid Range Sets the range of the external address to be used as serial flash address when the serial flash address is output in 32-bit mode. This setting is valid when the ADE[3] bit in DRENR is 1. 000: External address bits [24:0] enabled 001: External address bits [25:0] enabled Other than above: Setting prohibited

chanhvinh.com

19.4.7 Data Read Option Setting Register (DROPR)

DROPR is a 32-bit register that sets the option data in external address space read mode.

The settings of this register should be changed when the TEND flag in CMNSR is 1; otherwise, the operation cannot be guaranteed.

Bit:	31	30	29	28	27	26	25	24	23	22	21	20	19	18	17	16
	OPD3[7:0]								OPD2[7:0]							
Initial value:	0	0	0	0	0	0	0	0	0	0	0	0	0	0	0	0
R/W:	R/W	R/W	R/W	R/W	R/W	R/W	R/W	R/W	R/W	R/W	R/W	R/W	R/W	R/W	R/W	R/W

Bit:	15	14	13	12	11	10	9	8	7	6	5	4	3	2	1	0
	OPD1[7:0]								OPD0[7:0]							
Initial value:	0	0	0	0	0	0	0	0	0	0	0	0	0	0	0	0
R/W:	R/W	R/W	R/W	R/W	R/W	R/W	R/W	R/W	R/W	R/W	R/W	R/W	R/W	R/W	R/W	R/W

Bit	Bit Name	Initial Value	R/W	Description
31 to 24	OPD3[7:0]	H'00	R/W	Option Data 3 Sets the option data 3.
23 to 16	OPD2[7:0]	H'00	R/W	Option Data 2 Sets the option data 2.
15 to 8	OPD1[7:0]	H'00	R/W	Option Data 1 Sets the option data 1.
7 to 0	OPD0[7:0]	H'00	R/W	Option Data 0 Sets the option data 0.

Note: OPD3, OPD2, OPD1, and OPD0 are output in this order.

chanhvinh.com

19.4.8 Data Read Enable Setting Register (DRENR)

DRENR is a 32-bit register that sets the bit size of the command, optional command, address, option data, and read data in external address space read mode and enables the output of all except the read data.

The settings of this register should be changed when the TEND flag in CMNSR is 1; otherwise, the operation cannot be guaranteed.

Bit:	31	30	29	28	27	26	25	24	23	22	21	20	19	18	17	16
	CDB[1:0]		OCDB[1:0]		-	-	ADB[1:0]		-	-	OPDB[1:0]		-	-	DRDB[1:0]	
Initial value:	0	0	0	0	0	0	0	0	0	0	0	0	0	0	0	0
R/W:	R/W	R/W	R/W	R/W	R	R	R/W	R/W	R	R	R/W	R/W	R	R	R/W	R/W

Bit:	15	14	13	12	11	10	9	8	7	6	5	4	3	2	1	0
	-	CDE	-	OCDE	ADE[3:0]				OPDE[3:0]				-	-	-	-
Initial value:	0	1	0	0	0	1	1	1	0	0	0	0	0	0	0	0
R/W:	R	R/W	R	R/W	R/W	R/W	R/W	R/W	R/W	R/W	R/W	R/W	R	R	R	R

Bit	Bit Name	Initial Value	R/W	Description
31, 30	CDB[1:0]	00	R/W	Command Bit Size Sets the command size in bit units. 00: 1 bit 01: 2 bits 10: 4 bits 11: Setting prohibited
29, 28	OCDB[1:0]	00	R/W	Optional Command Bit Size Sets the optional command size in bit units. 00: 1 bit 01: 2 bits 10: 4 bits 11: Setting prohibited
27, 26	—	All 0	R	Reserved These bits are always read as 0. The write value should always be 0.

chanhvinh.com

Bit	Bit Name	Initial Value	R/W	Description
25, 24	ADB[1:0]	00	R/W	Address Bit Size Sets the address size in bit units. 00: 1 bit 01: 2 bits 10: 4 bits 11: Setting prohibited
23, 22	—	All 0	R	Reserved These bits are always read as 0. The write value should always be 0.
21, 20	OPDB[1:0]	00	R/W	Option Data Bit Size Sets the option data size in bit units. 00: 1 bit 01: 2 bits 10: 4 bits 11: Setting prohibited
19, 18	—	All 0	R	Reserved These bits are always read as 0. The write value should always be 0.
17, 16	DRDB[1:0]	00	R/W	Data Read Bit Size Sets the data read size in bit units. 00: 1 bit 01: 2 bits 10: 4 bits 11: Setting prohibited
15	—	0	R	Reserved This bit is always read as 0. The write value should always be 0.
14	CDE	1	R/W	Command Enable Sets the command to be output. 0: Command output disabled 1: Command output enabled

chanhvinh.com

Bit	Bit Name	Initial Value	R/W	Description
13	—	0	R	Reserved This bit is always read as 0. The write value should always be 0.
12	OCDE	0	R/W	Optional Command Enable Sets the optional command to be output. 0: Optional command output disabled 1: Optional command output enabled
11 to 8	ADE[3:0]	0111	R/W	Address Enable Sets the address to be output. Be sure to use the following setting; otherwise, the operation is not guaranteed. (1) BSZ[1:0] in CMNCR = 00 (one serial flash memory connected) 0000: Output disabled 0111: Address[23:0] 1111: Address[31:0] Other than above: Setting prohibited (2) BSZ[1:0] in CMNCR = 01 (two serial flash memories connected) 0000: Output disabled 0111: Address[24:1] 1111: Address[32:1] Other than above: Setting prohibited
7 to 4	OPDE[3:0]	0000	R/W	Option Data Enable Sets the option data to be output. Use only the settings given below. Otherwise, the operation cannot be guaranteed. 0000: Output disabled 1000: OPD3 1100: OPD3, OPD2 1110: OPD3, OPD2, OPD1 1111: OPD3, OPD2, OPD1, OPD0 Other than above: Setting prohibited
3 to 0	—	All 0	R	Reserved These bits are always read as 0. The write value should always be 0.

chanhvinh.com

19.4.9 SPI Mode Control Register (SMCR)

SMCR is a 32-bit register that sets the operation in SPI operating mode.

The settings of this register should be changed when the TEND flag in CMNSR is 1; otherwise, the operation cannot be guaranteed.

Bit:	31	30	29	28	27	26	25	24	23	22	21	20	19	18	17	16
	-	-	-	-	-	-	-	-	-	-	-	-	-	-	-	-
Initial value:	0	0	0	0	0	0	0	0	0	0	0	0	0	0	0	0
R/W:	R	R	R	R	R	R	R	R	R	R	R	R	R	R	R	R

Bit:	15	14	13	12	11	10	9	8	7	6	5	4	3	2	1	0
	-	-	-	-	-	-	-	SSLKP	-	-	-	-	-	SPIRE	SPIWE	SPIE
Initial value:	0	0	0	0	0	0	0	0	0	0	0	0	0	0	0	0
R/W:	R	R	R	R	R	R	R	R/W	R	R	R	R	R	R/W	R/W	W

Bit	Bit Name	Initial Value	R/W	Description
31 to 9	—	All 0	R	Reserved These bits are always read as 0. The write value should always be 0.
8	SSLKP	0	R/W	SPBSSL Signal Level Determines the SPBSSL status after the end of transfer. 0: SPBSSL signal is negated at the end of transfer. 1: SPBSSL signal level is maintained from the end of transfer to the start of next access. Note: When the transfer data bit size is set to 2 bits or 4 bits with the SPIDB[1:0] bits, the SPIRE and SSLKP bits should not be set to 1 at the same time.
7 to 3	—	All 0	R	Reserved These bits are always read as 0. The write value should always be 0.

chanhvinh.com

Bit	Bit Name	Initial Value	R/W	Description
2	SPIRE	0	R/W	Data Read Enable Enables reading in SPI operating mode. 0: Data reading disabled 1: Data reading enabled Note: When the transfer data bit size is set to 2 bits or 4 bits with the SPIDB[1:0] bits, the SPIRE and SPIWE bits should not be set to 1 at the same time.
1	SPIWE	0	R/W	Data Write Enable Enables writing in SPI operating mode. 0: Data writing disabled 1: Data writing enabled Note: When the transfer data bit size is set to 2 bits or 4 bits with the SPIDB[1:0] bits, the SPIRE and SPIWE bits should not be set to 1 at the same time.
0	SPIE	0	W	SPI Data Transfer Enable Data is transferred by setting this bit to 1. This bit is enabled only when the TEND bit in CMNSR is set to 1. The operation cannot be guaranteed when this bit is set to 1 with the TEND bit set to 0. If this bit is set to 1 at the t3 period, data transfer is started after the end of the t3 period. This bit is always read as 0. Note: When SPBSSL is negated, the command, optional command, address, and option data that are output enabled are output even if the SPIRE and SPIWE bits are cleared to 0. When SPBSSL is asserted, follow 19.6.1 Note on Transfer Start from SPBSSL Hold State in SPI Operation Mode

chanhvinh.com

19.4.10 SPI Mode Command Setting Register (SMCMR)

SMCMR is a 32-bit register that sets the commands issued in SPI operating mode.

The settings of this register should be changed when the TEND flag in CMNSR is 1; otherwise, the operation cannot be guaranteed.

Bit:	31	30	29	28	27	26	25	24	23	22	21	20	19	18	17	16
	-	-	-	-	-	-	-	-	CMD[7:0]							
Initial value:	0	0	0	0	0	0	0	0	0	0	0	0	0	0	0	0
R/W:	R	R	R	R	R	R	R	R	R/W	R/W	R/W	R/W	R/W	R/W	R/W	R/W

Bit:	15	14	13	12	11	10	9	8	7	6	5	4	3	2	1	0
	-	-	-	-	-	-	-	-	OCMD[7:0]							
Initial value:	0	0	0	0	0	0	0	0	0	0	0	0	0	0	0	0
R/W:	R	R	R	R	R	R	R	R	R/W	R/W	R/W	R/W	R/W	R/W	R/W	R/W

Bit	Bit Name	Initial Value	R/W	Description
31 to 24	—	All 0	R	Reserved These bits are always read as 0. The write value should always be 0.
23 to 16	CMD[7:0]	H'00	R/W	Command Sets the command.
15 to 8	—	All 0	R	Reserved These bits are always read as 0. The write value should always be 0.
7 to 0	OCMD[7:0]	H'00	R/W	Optional Command Sets the optional command.

chanhvinh.com

19.4.11 SPI Mode Address Setting Register (SMADR)

SMADR is a 32-bit register that sets the addresses in SPI operating mode.

The settings of this register should be changed when the TEND flag in CMNSR is 1; otherwise, the operation cannot be guaranteed.

Bit:	31	30	29	28	27	26	25	24	23	22	21	20	19	18	17	16
	ADR[31:24]								ADR[23:16]							
Initial value:	0	0	0	0	0	0	0	0	0	0	0	0	0	0	0	0
R/W:	R/W	R/W	R/W	R/W	R/W	R/W	R/W	R/W	R/W	R/W	R/W	R/W	R/W	R/W	R/W	R/W

Bit:	15	14	13	12	11	10	9	8	7	6	5	4	3	2	1	0
	ADR[15:0]															
Initial value:	0	0	0	0	0	0	0	0	0	0	0	0	0	0	0	0
R/W:	R/W	R/W	R/W	R/W	R/W	R/W	R/W	R/W	R/W	R/W	R/W	R/W	R/W	R/W	R/W	R/W

Bit	Bit Name	Initial Value	R/W	Description
31 to 24	ADR[31:24]	H'00	R/W	Address Sets the value of bits 31 to 24 when the serial flash address is output in 32-bit units. This setting is valid when ADE[3] in SMENR is 1.
23 to 0	ADR[23:0]	H'000000	R/W	Address Sets the address.

chanhvinh.com

19.4.12 SPI Mode Option Setting Register (SMOPR)

SMOPR is a 32-bit register that sets the option data in SPI operating mode.

The settings of this register should be changed when the TEND flag in CMNSR is 1; otherwise, the operation cannot be guaranteed.

Bit:	31	30	29	28	27	26	25	24	23	22	21	20	19	18	17	16
	OPD3[7:0]								OPD2[7:0]							
Initial value:	0	0	0	0	0	0	0	0	0	0	0	0	0	0	0	0
R/W:	R/W	R/W	R/W	R/W	R/W	R/W	R/W	R/W	R/W	R/W	R/W	R/W	R/W	R/W	R/W	R/W

Bit:	15	14	13	12	11	10	9	8	7	6	5	4	3	2	1	0
	OPD1[7:0]								OPD0[7:0]							
Initial value:	0	0	0	0	0	0	0	0	0	0	0	0	0	0	0	0
R/W:	R/W	R/W	R/W	R/W	R/W	R/W	R/W	R/W	R/W	R/W	R/W	R/W	R/W	R/W	R/W	R/W

Bit	Bit Name	Initial Value	R/W	Description
31 to 24	OPD3[7:0]	H'00	R/W	Option Data 3 Sets the option data 3.
23 to 16	OPD2[7:0]	H'00	R/W	Option Data 2 Sets the option data 2.
15 to 8	OPD1[7:0]	H'00	R/W	Option Data 1 Sets the option data 1.
7 to 0	OPD0[7:0]	H'00	R/W	Option Data 0 Sets the option data 0.

Note: OPD3, OPD2, OPD1, and OPD0 are output in this order.

chanhvinh.com

19.4.13 SPI Mode Enable Setting Register (SMENR)

SMENR is a 32-bit register that sets the bit size of the command, optional command, address, option data, and transfer data in SPI operating mode and enables their output. Disabling all of the command, optional command, address, option data, and transfer data is prohibited. At least one of them must be enabled.

The settings of this register should be changed when the TEND flag in CMNSR is 1; otherwise, the operation cannot be guaranteed.

Bit:	31	30	29	28	27	26	25	24	23	22	21	20	19	18	17	16
	CDB[1:0]		OCDB[1:0]		-	-	ADB[1:0]		-	-	OPDB[1:0]		-	-	SPIDB[1:0]	
Initial value:	0	0	0	0	0	0	0	0	0	0	0	0	0	0	0	0
R/W:	R/W	R/W	R/W	R/W	R	R	R/W	R/W	R	R	R/W	R/W	R	R	R/W	R/W

Bit:	15	14	13	12	11	10	9	8	7	6	5	4	3	2	1	0
	-	CDE	-	OCDE	ADE[3:0]				OPDE[3:0]				SPIDE[3:0]			
Initial value:	0	1	0	0	0	0	0	0	0	0	0	0	0	0	0	0
R/W:	R	R/W	R	R/W	R/W	R/W	R/W	R/W	R/W	R/W	R/W	R/W	R/W	R/W	R/W	R/W

Bit	Bit Name	Initial Value	R/W	Description
31, 30	CDB[1:0]	00	R/W	Command Bit Size Sets the command size in bit units. 00: 1 bit 01: 2 bits 10: 4 bits 11: Setting prohibited
29, 28	OCDB[1:0]	00	R/W	Optional Command Bit Size Sets the optional command size in bit units. 00: 1 bit 01: 2 bits 10: 4 bits 11: Setting prohibited
27, 26	—	All 0	R	Reserved These bits are always read as 0. The write value should always be 0.

chanhvinh.com

Bit	Bit Name	Initial Value	R/W	Description
25, 24	ADB[1:0]	00	R/W	Address Bit Size Sets the address size in bit units. 00: 1 bit 01: 2 bits 10: 4 bits 11: Setting prohibited
23, 22	—	All 0	R	Reserved These bits are always read as 0. The write value should always be 0.
21, 20	OPDB[1:0]	00	R/W	Option Data Bit Size Sets the option data size in bit units. 00: 1 bit 01: 2 bits 10: 4 bits 11: Setting prohibited
19, 18	—	All 0	R	Reserved These bits are always read as 0. The write value should always be 0.
17, 16	SPIDB[1:0]	00	R/W	Transfer Data Bit Size Sets the transfer data size in bit units. 00: 1 bit 01: 2 bits 10: 4 bits 11: Setting prohibited
15	—	0	R	Reserved This bit is always read as 0. The write value should always be 0.
14	CDE	1	R/W	Command Enable Sets the command to be output. 0: Command output disabled 1: Command output enabled

chanhvinh.com

Bit	Bit Name	Initial Value	R/W	Description
13	—	0	R	Reserved This bit is always read as 0. The write value should always be 0.
12	OCDE	0	R/W	Optional Command Enable Sets the optional command to be output. 0: Optional command output disabled 1: Optional command output enabled
11 to 8	ADE[3:0]	0000	R/W	Address Enable Sets the address to be output. Use only the settings given below. Otherwise, the operation cannot be guaranteed. 0000: Output disabled 0100: ADR[23:16] 0110: ADR[23:8] 0111: ADR[23:0] 1111: ADR[31:0] Other than above: Setting prohibited
7 to 4	OPDE[3:0]	0000	R/W	Option Data Enable Sets the option data to be output. Use only the settings given below. Otherwise, the operation cannot be guaranteed. 0000: Output disabled 1000: OPD3 1100: OPD3, OPD2 1110: OPD3, OPD2, OPD1 1111: OPD3, OPD2, OPD1, OPD0 Other than above: Setting prohibited

chanhvinh.com

Bit	Bit Name	Initial Value	R/W	Description
3 to 0	SPIDE[3:0]	0000	R/W	Transfer Data Enable Sets valid transfer data. Valid data differs depending on the BSZ[1:0] bit setting in CMNCR. The following settings must be used. Otherwise, the operation is not guaranteed. (1) BSZ[1:0] bits in CMNCR = 00 (one serial flash memory connected) 0000: Not transferred 1000: 8 bits transferred (enables DATA[31:24]) 1100: 16 bits transferred (enables DATA[31:16]) 1111: 32 bits transferred (enables DATA[31:0]) Other than above: Setting prohibited (2) BSZ[1:0] bits in CMNCR = 01 (two serial flash memories connected) 0000: Not transferred 1000: 16 bits transferred (enables DATA[63:48]) 1100: 32 bits transferred (enables DATA[63:32]) 1111: 64 bits transferred (enables DATA[63:0]) Other than above: Setting prohibited

chanhvinh.com

19.4.14 SPI Mode Read Data Register 0 (SMRDR0)

SMRDR0 is a 32-bit register that stores the read data in SPI operating mode.

The settings of this register should be read when the TEND flag in CMNSR is 1; otherwise, the operation cannot be guaranteed.

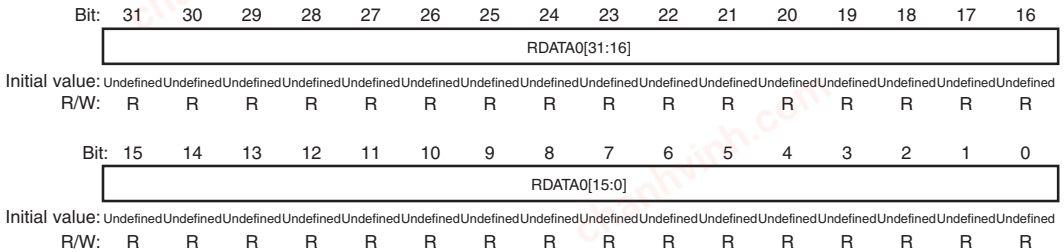

Bit	Bit Name	Initial Value	R/W	Description
31 to 0	RDATA0 [31:0]	Undefined	R	Read Data Holds the data read in SPI operating mode. Data bits differ depending on the BSZ[1:0] bit setting in CMNCR. BSZ[1:0] = 00: Read data[31:0]. BSZ[1:0] = 01: Read data[63:32].

Note: The contents of this register and SMRDR1 are modified upon completion of reception in SPI operating mode. Be sure to read data when reception in SPI operating mode is completed.

chanhvinh.com

19.4.15 SPI Mode Read Data Register 1 (SMRDR1)

SMRDR1 is a 32-bit register that stores the read data in SPI operating mode.

This register is enabled when the BSZ[1:0] bits in CMNCR are set to 01 (two serial flash memories connected) and disabled when the BSZ[1:0] bits in CMNCR are set to 00 (one serial flash memory connected).

The settings of this register should be read when the TEND flag in CMNSR is 1; otherwise, the operation cannot be guaranteed.

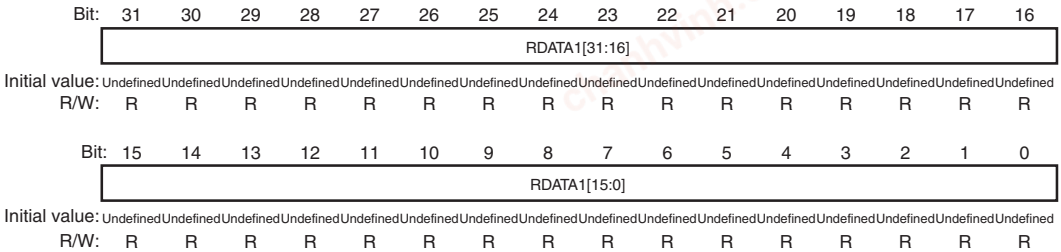

Bit	Bit Name	Initial Value	R/W	Description
31 to 0	RDATA1 [31:0]	Undefined	R	Read Data Holds the data read in SPI operating mode. Enabled when the BSZ[1:0] bits in CMNCR are set to 01 (two serial flash memories connected) and disabled when the BSZ[1:0] bits in CMNCR are set to 00 (one serial flash memory connected). BSZ[1:0] = 01: Read data[31:0].

chanhvinh.com

19.4.16 SPI Mode Write Data Register 0 (SMWDR0)

SMWDR0 is a 32-bit register that sets the write data in SPI operating mode.

The settings of this register should be changed when the TEND flag in CMNSR is 1; otherwise, the operation cannot be guaranteed.

Bit:	31	30	29	28	27	26	25	24	23	22	21	20	19	18	17	16
	WDATA0[31:16]															
Initial value:	0	0	0	0	0	0	0	0	0	0	0	0	0	0	0	0
R/W:	R/W	R/W	R/W	R/W	R/W	R/W	R/W	R/W	R/W	R/W	R/W	R/W	R/W	R/W	R/W	R/W

Bit:	15	14	13	12	11	10	9	8	7	6	5	4	3	2	1	0
	WDATA0[15:0]															
Initial value:	0	0	0	0	0	0	0	0	0	0	0	0	0	0	0	0
R/W:	R/W	R/W	R/W	R/W	R/W	R/W	R/W	R/W	R/W	R/W	R/W	R/W	R/W	R/W	R/W	R/W

Bit	Bit Name	Initial Value	R/W	Description
31 to 0	WDATA0 [31:0]	All 0	R/W	Write Data Holds the data written in SPI operating mode. Data bits differ depending on the BSZ[1:0] bit setting in CMNCR. BSZ[1:0] = 00: Write data[31:0]. BSZ[1:0] = 01: Write data[63:32].

chanhvinh.com

19.4.17 SPI Mode Write Data Register 1 (SMWDR1)

SMWDR1 is a 32-bit register that sets the write data in SPI operating mode.

This register is enabled when the BSZ[1:0] bits in CMNCR are set to 01 (two serial flash memories connected) and disabled when the BSZ[1:0] bits in CMNCR are set to 00 (one serial flash memory connected).

The settings of this register should be changed when the TEND flag in CMNSR is 1; otherwise, the operation cannot be guaranteed.

Bit:	31	30	29	28	27	26	25	24	23	22	21	20	19	18	17	16
	WDATA1[31:16]															
Initial value:	0	0	0	0	0	0	0	0	0	0	0	0	0	0	0	0
R/W:	R/W	R/W	R/W	R/W	R/W	R/W	R/W	R/W	R/W	R/W	R/W	R/W	R/W	R/W	R/W	R/W

Bit:	15	14	13	12	11	10	9	8	7	6	5	4	3	2	1	0
	WDATA1[15:0]															
Initial value:	0	0	0	0	0	0	0	0	0	0	0	0	0	0	0	0
R/W:	R/W	R/W	R/W	R/W	R/W	R/W	R/W	R/W	R/W	R/W	R/W	R/W	R/W	R/W	R/W	R/W

Bit	Bit Name	Initial Value	R/W	Description
31 to 0	WDATA1 [31:0]	All 0	R/W	Write Data Holds the data written in SPI operating mode. Enabled when the BSZ[1:0] bits in CMNCR are set to 01 (two serial flash memories connected) and disabled when the BSZ[1:0] bits in CMNCR are set to 00 (one serial flash memory connected). BSZ[1:0] = 01: Write data[31:0].

chanhvinh.com

19.4.18 Common Status Register (CMNSR)

CMNSR is a 32-bit register that holds flags indicating the operating state.

The settings of this register are reflected both in external address space read mode and SPI operating mode.

Bit:	31	30	29	28	27	26	25	24	23	22	21	20	19	18	17	16
	-	-	-	-	-	-	-	-	-	-	-	-	-	-	-	-
Initial value:	0	0	0	0	0	0	0	0	0	0	0	0	0	0	0	0
R/W:	R	R	R	R	R	R	R	R	R	R	R	R	R	R	R	R

Bit:	15	14	13	12	11	10	9	8	7	6	5	4	3	2	1	0
	-	-	-	-	-	-	-	-	-	-	-	-	-	-	SSLF	TEND
Initial value:	0	0	0	0	0	0	0	0	0	0	0	0	0	0	0	1
R/W:	R	R	R	R	R	R	R	R	R	R	R	R	R	R	R	R

Bit	Bit Name	Initial Value	R/W	Description
31 to 2	—	All 0	R	Reserved These bits are always read as 0. The write value should always be 0.
1	SSLF	0	R	SPBSSL Pin Monitor 0: SPBSSL pin is negated 1: SPBSSL pin is asserted
0	TEND	1	R	Transfer End Flag Indicates whether the data transfer has ended. 0: Indicates that data transfer is in progress 1: Indicates that data transfer has ended

chanhvinh.com

19.5 Operation

19.5.1 System Configuration

With this module, one or two serial flash memories can be directly connected (data size of 1, 2, and 4 bits). The number of connected memories can be selected using the BSZ[1:0] bits in CMNCR.

Examples of system configuration with one serial flash memory connected and two serial flash memories connected are shown in figures 19.2 and 19.3, respectively.

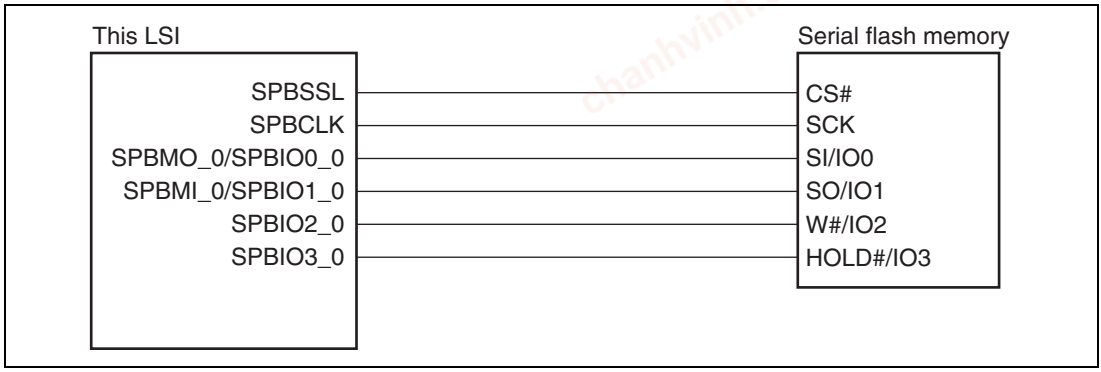

Figure 19.2 System Configuration Example with 4-Bit Data Size and One Serial Flash Memory Connected (BSZ[1:0] Bits in CMNCR = 00)

chanhvinh.com

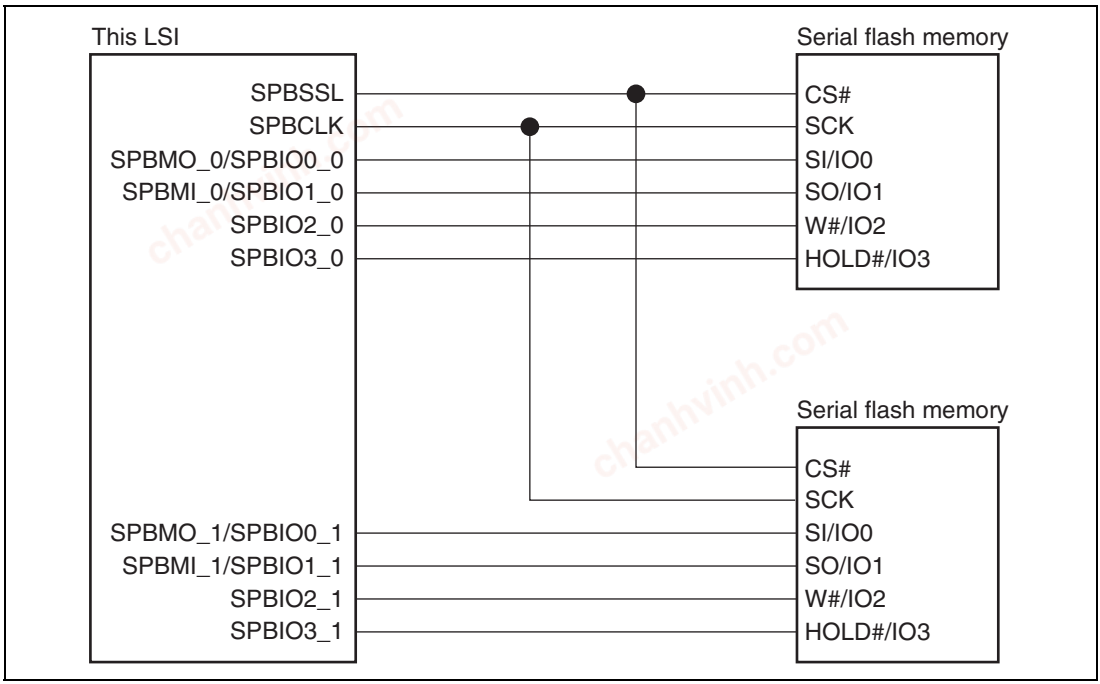

Figure 19.3 System Configuration Example with 4-Bit Data Size and Two Serial Flash Memories Connected (BSZ[1:0] Bits in CMNCR = 01)

19.5.2 Address Map

In external address space read mode, the serial flash connected is assigned in the SPI multi I/O bus space. A maximum accessible address space differs depending on the number of serial flash memories connected. In combination with DREAR, a maximum of 4 Gbytes can be accessed when one serial flash memory is connected, and a maximum of 8 Gbytes can be accessed when two memories are connected.

Table 19.4 Address Map

Number of Serial Flash Memories Connected	Internal Address	Cache	Max. Access Area
1	H'18000000 to H'1BFFFFFF	Enabled	4 Gbytes
	H'38000000 to H'3BFFFFFF	Disabled	
2	H'18000000 to H'1BFFFFFF	Enabled	8 Gbytes
	H'38000000 to H'3BFFFFFF	Disabled	

chanhvinh.com

19.5.3 32-bit Serial Flash Addresses

Since the SPI multi I/O bus space is 64 Mbytes, only a part of the 32-bit serial flash address area can be directly accessed. Here, the fixed value set in the pertinent register is used as the upper bit value of a 32-bit address.

To output serial flash addresses in 32 bits, set the ADE[3] bit in DRENR to 1, set the range of the external addresses used as the serial flash addresses to the EAC[2:0] bits in DREAR, and set the upper bit value of the 32-bit address as the fixed value to the EAV[7:0] bits in DREAR.

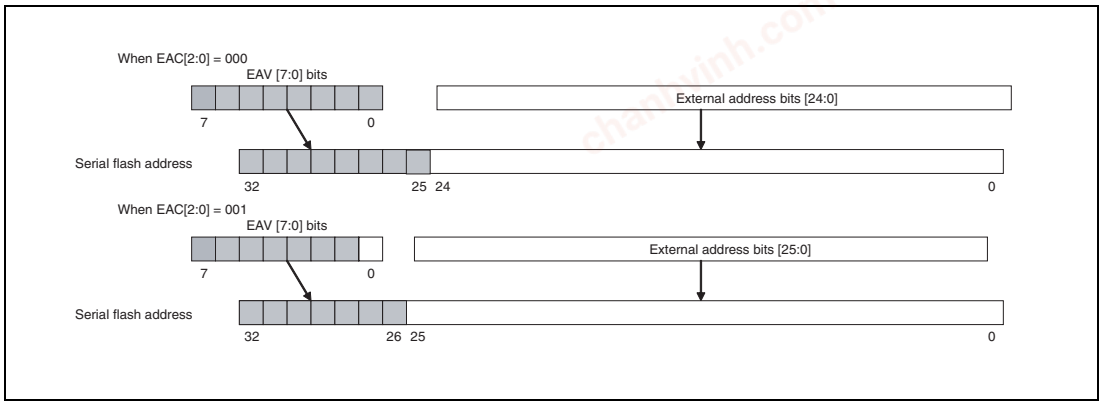

Figure 19.4 32-Bit Address Setting

Setting the ADE[3] bit in DRENR to 1 allows the serial flash address to be output using [31:0] bits. When EAC[2:0] = 000, external address bits [24:0] are valid; set the value for [32:25] bits to EAV[7:0]. When EAC[2:0] = 001, external address bits [25:0] are valid; set the value for [32:26] bits to EAV[7:1].

The address bits actually used for access depend on the number of serial flash memories connected. When one serial flash memory is connected, address bits [31:0] are used and when two memories are connected, address bits [32:1] are used.

Note: When the capacity of the serial flash memory used is smaller than 4 Gbytes, keep the following point in mind.
If an access spreads over the last address of the serial flash in burst mode (RBE bit in DRECR = 1), the access address does not agree with the internal address of the serial flash. To prevent this, software should appropriately manage the accessible address areas for the serial flash memory used according to the memory capacity.

chanhvinh.com

19.5.4 Data Alignment

When two serial flash memories are connected, the serial flash memory connected to the pin SPBIO3_0-SPBIO0_0 has the address 2n and the serial flash memory connected to the pin SPBIO3_1-SPBIO0_1 has the address 2n + 1. The data should be accessed in word or larger units. It cannot be accessed in byte units. Data alignment when two serial flash memories are connected is shown in table 19.5.

Table 19.5 Data Alignment when Two Serial Flash Memories are Connected

		Serial Flash Memory	
Operation		**SPBIO3_0 to SPBIO0_0 Pins**	**SPBIO3_1 to SPBIO0_1 Pins**
Word access to address 0		Data 15 to 8	Data 7 to 0
Word access to address 2		Data 15 to 8	Data 7 to 0
Longword access to address 0	1 word (address 0)	Data 31 to 24	Data 23 to 16
	2 words (address 2)	Data 15 to 8	Data 7 to 0
Double-longword access to address 0	1 word (address 0)	Data 63 to 56	Data 55 to 48
	2 words (address 2)	Data 47 to 40	Data 39 to 32
	3 words (address 4)	Data 31 to 24	Data 23 to 16
	4 words (address 6)	Data 15 to 8	Data 7 to 0

chanhvinh.com

19.5.5 Operating Modes

This module has two operating modes: external address space read mode and SPI operating mode.

In external address space read mode, a read access to the SPI multi I/O bus space is converted into SPI communication and data is received. After data acquisition, data is returned to the bus master that is the issuing source. For details, see section 19.5.6, External Address Space Read Mode.

In SPI operating mode, arbitrary SPI communication is carried out using register settings. For details, see section 19.5.8, SPI Operating Mode.

19.5.6 External Address Space Read Mode

A read access to the SPI multi I/O bus space can be converted into SPI communication in external address space read mode. Further, the commands, optional commands, and option data issued for reading can be modified using registers.

In external address space read mode, either normal read operation or burst read operation can be selected. The transfer format is determined based on the common control register (CMNCR), SSL delay register (SSLDR), bit rate setting register (SPBCR), data read control register (DRCR), data read command setting register (DRCMR), data read extended address setting register (DREAR), data read option setting register (DROPR), and data read enable setting register (DRENR).

(1) Normal Read Operation

When the RBE bit in DRCR is set to 0, normal read operation is performed.

In the normal read operation, the data of 8 bits, 16 bits, 32 bits, and 64 bits are read for respectively a byte, a word, and a longword, and a double-longword read access. Here, a byte access is enabled only when one serial flash memory is connected. After reading, the SPBSSL pin is negated.

The normal read operation timing is shown in figure 19.5.

t1 is the time period from SPBSSL pin assertion to SPBCLK oscillation (clock delay), t2 is the time period from transmission of the last SPBCLK edge of a transfer to SPBSSL pin negation (SPBSSL negation delay), and t3 is the time period from one transfer end to the next transfer start (next access). For details of t1, t2, and t3, see section 19.5.9, Transfer Format.

chanhvinh.com

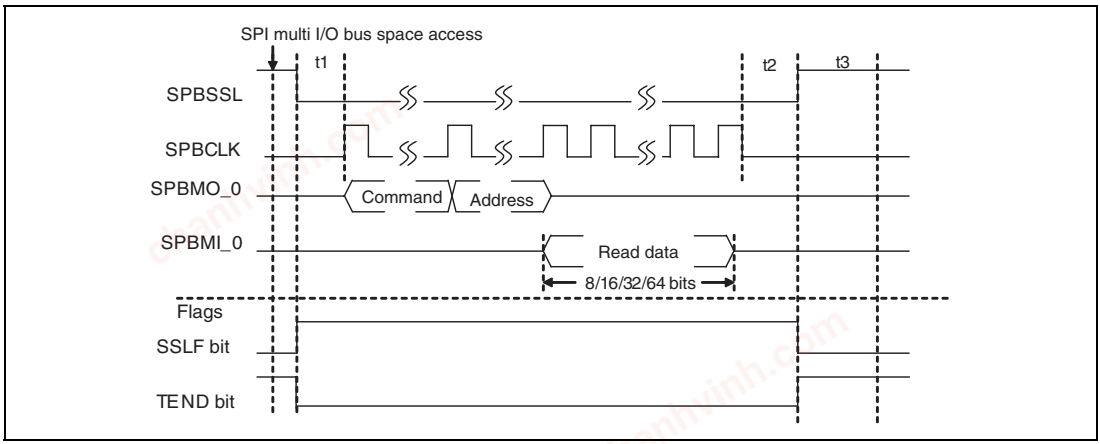

Figure 19.5 Normal Read Operation Timing

(2) Burst Read Operation

When the RBE bit in DRCR is set to 1, burst read operation is performed.

Read cache is enabled in the burst read operation. For read cache operation, see section 19.5.7, Read Cache.

For reading bytes, words, longwords or double-longwords, the read cache is first referred to for the data. When the read cache contains the data, the data is read from the read cache without accessing the serial flash memory. When the read cache does not contain the data, burst read operation is performed in the serial flash memory and the read data is stored in the read cache. The data transfer length at that time is 64 bits × RBURST[3:0] bits and the data is always read from the 64-bit boundary.

The SPBSSL pin status after data transfer can be selected by using the SSLE bit in DRCR. When the SSLE bit is set to 0, the SPBSSL pin is negated after data transfer. For an operation performed when the SSLE bit is set to 1, see (3) Burst Read Operation with Automatic SPBSSL Negation, just below.

A pattern diagram of this operation and a burst read operation timing diagram when SSLE bit is set to 0 are shown in figures 19.6 and 19.7.

chanhvinh.com

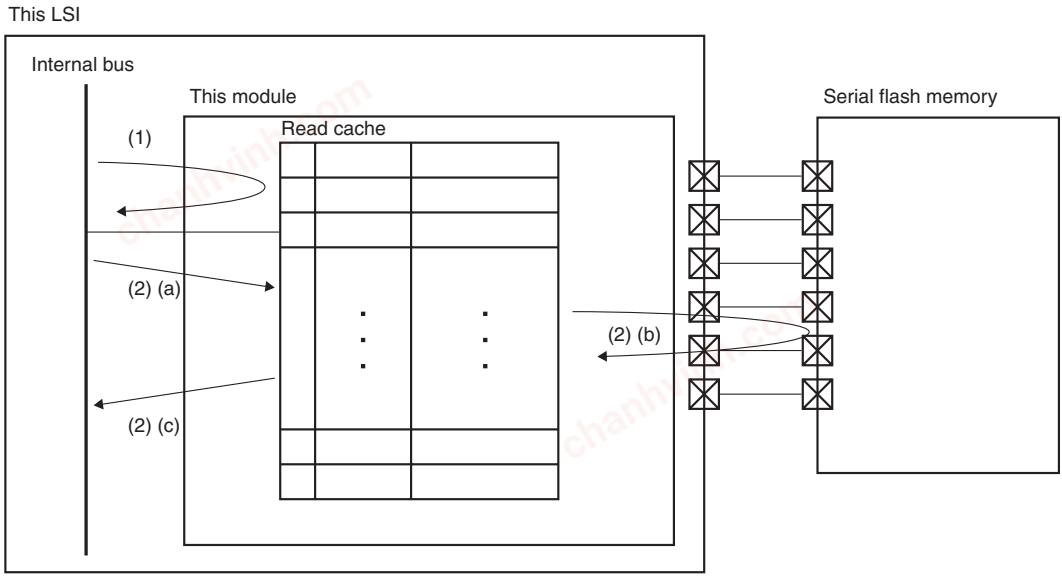

(1) When the read cache contains the data
The data is read from the read cache without performing SPI communication.

(2) When the read cache does not contain the data
(a) The read cache is accessed to confirm that the data is not in the read cache.
(b) The data is read from the serial flash memory and the read data is stored in the read cache.
(c) The data is read from the read cache.

Figure 19.6 Burst Read Operation

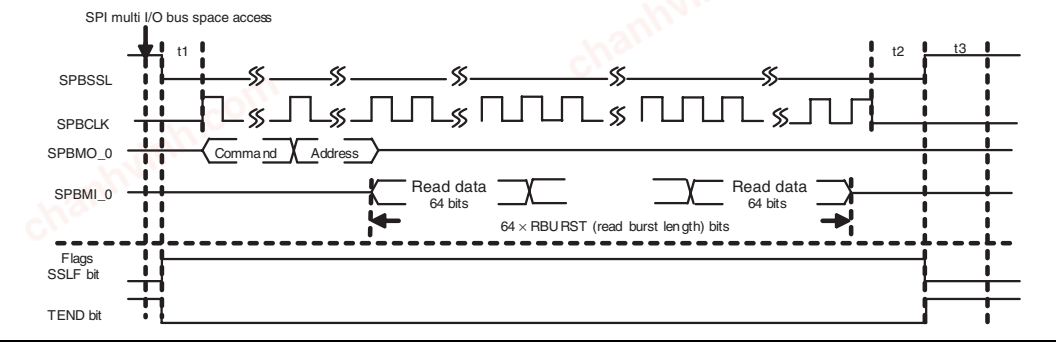

Figure 19.7 Burst Read Operation Timing (SSLE Bit = 0)

chanhvinh.com

(3) Burst Read Operation with Automatic SPBSSL Negation

When SSLE bit in DRCR is set to 1, this module does not negate the SPBSSL pin after the burst read transfer. When accessing the next time, if the address is continuous with the previous read address, the burst read operation is performed without issuing the command, optional command, address, or option data. If the address is not continuous with the previous read address, the SPBSSL pin is once negated and the burst read operation is performed after issuing the command, optional command, address, or option data.

Burst read timing diagrams for continuous address and non-continuous address are shown in figures 19.8 and 19.9.

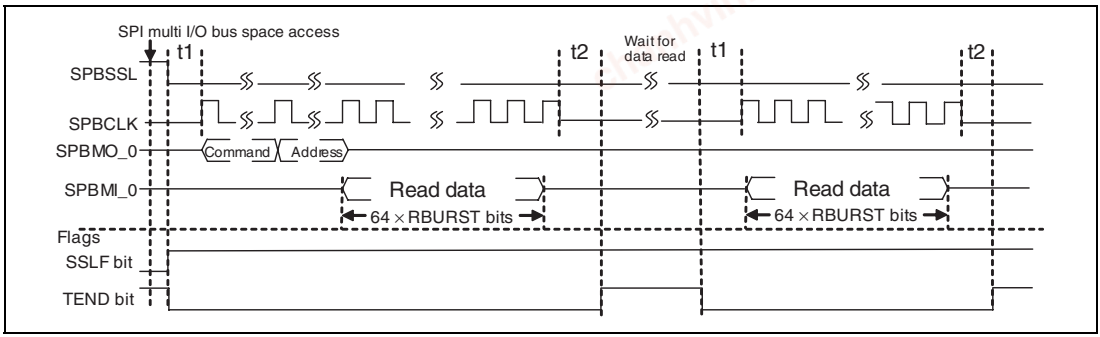

Figure 19.8 Burst Read Timing for Continuous Address (SSLE Bit = 1)

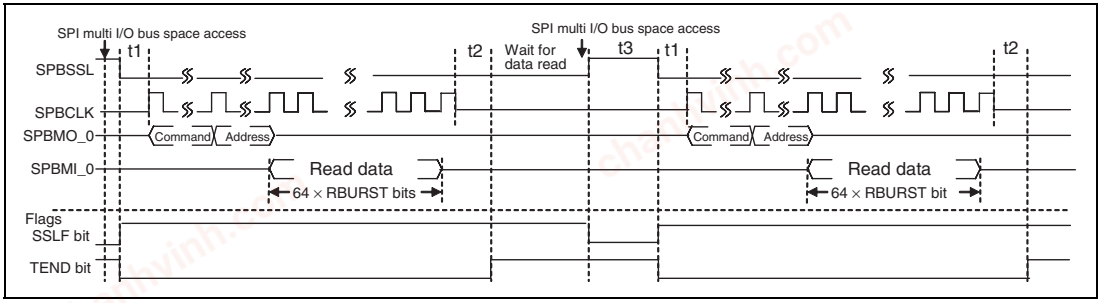

Figure 19.9 Burst Read Timing for Non-Continuous Address (SSLE Bit = 1)

For negation of SPBSSL to complete the data transfer with this operation, follow the procedures shown below.

1. Clear the SSLE bit in DRCR to 0.
2. Flush the read cache.
3. Execute a (dummy) read access.

chanhvinh.com

(4) Initial Setting Flow

An example of an initial setting flow in external address space read mode is shown in figure 19.10.

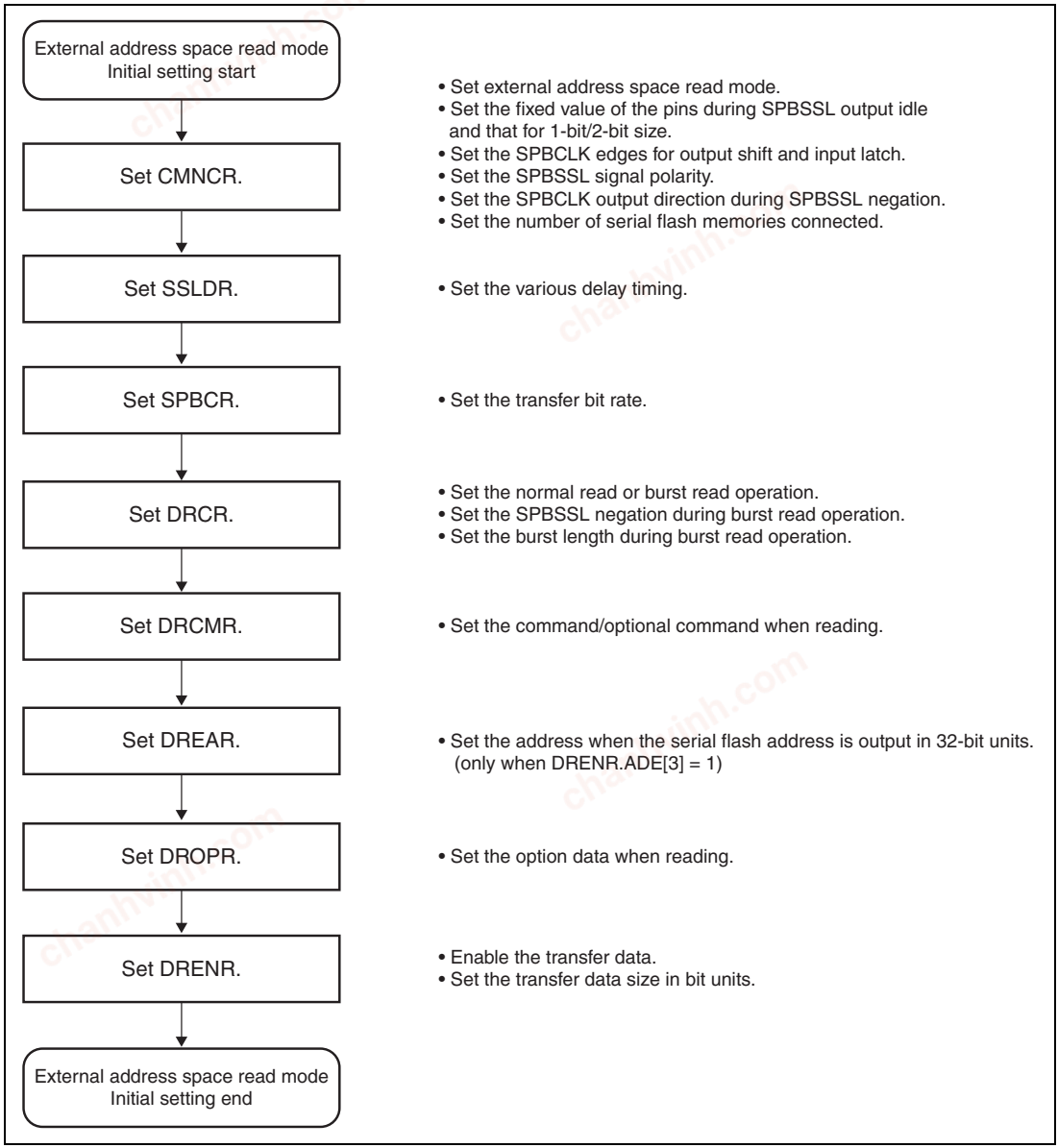

Figure 19.10 Example of Initial Setting Flow in External Address Space Read Mode

chanhvinh.com

19.5.7 Read Cache

This module has a simple built-in read cache. The read cache can be used during external address space read mode and burst read operation. The read cache is configured with a line size of 64 bits and 16 entries.

Read cache configuration is shown in figure 19.11.

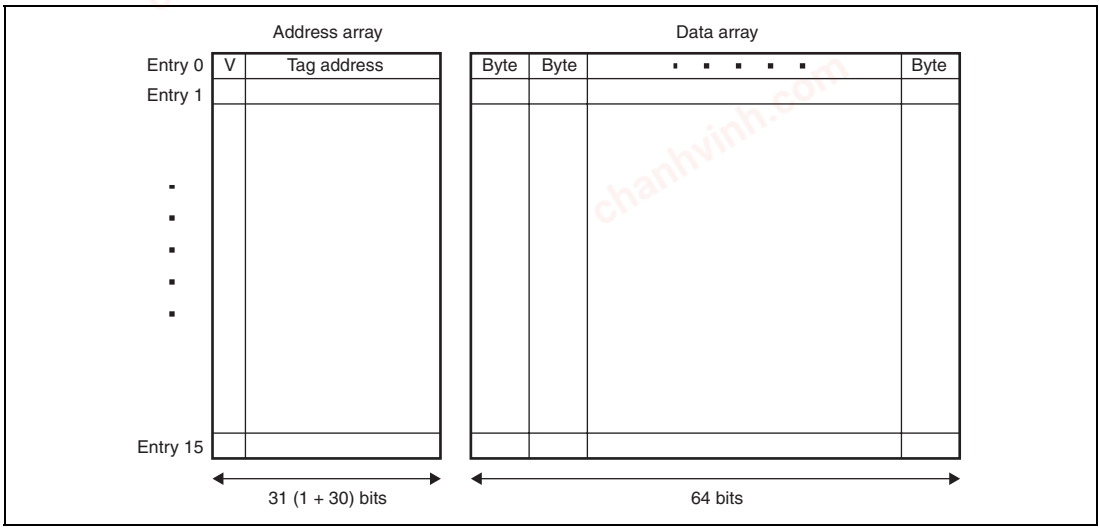

Figure 19.11 Read Cache Configuration

(1) Address Array

The V bit indicates whether the entry data is valid. When the V bit is 1, the data is valid and when V bit is 0, the data is invalid.

The tag address bits hold the address used for the serial flash memory. Address bits 32 to 3 are used for the purpose.

Address bits 23 to 3 are enabled when address output is 24 bits and one serial flash memory is connected; and address bits 24 to 3 are enabled when two serial flash memories are connected.

Address bits 31 to 3 are enabled when address output is 32 bits and one serial flash memory is connected; and address bits 32 to 3 are enabled when two serial flash memories are connected.

(2) Data Array

It retains the 64-bit read data. Registration in the read cache is performed in line units.

chanhvinh.com

(3) Read Operation

In case of read-hit, data is read from the read cache. In case of read-miss, after the 64 × RBURST (read burst length) data is read from the serial flash memory and the read cache is updated, the data is returned to the bus master.

(4) Data Replacement

The write pointer is used to update data. In case of read-miss, the RBURST (read burst length) portion data is replaced starting at the entry specified by the write pointer. In other words, the data is replaced in the storage order of the data. Whether data is referred to or not will not affect the replacement order of data.

19.5.8 SPI Operating Mode

This module can carry out an arbitrary SPI operation by using the register settings.

The transfer format is determined based on the common control register (CMNCR), SSL delay register (SSLDR), bit rate setting register (SPBCR), SPI mode control register (SMCR), SPI mode command setting register (SMCMR), SPI mode address setting register (SMADR), SPI mode option setting register (SMOPR), and SPI mode enable setting register (SMENR), SPI mode read data register (SMRDR), and SPI mode write data register (SMWDR). This mode can be used for reading the status of the serial flash memory and writing to the serial flash memory.

chanhvinh.com

(1) Transfer Start

The transfer of data is started in the set transfer format by setting the SPIE bit in SMCR to 1. When write operation is enabled, the SPI mode write data register is transmitted to the serial flash memory. When read operation is enabled, data read from the serial flash memory is stored into the SPI mode read data register.

The SPI operation timing is shown in figure 19.12.

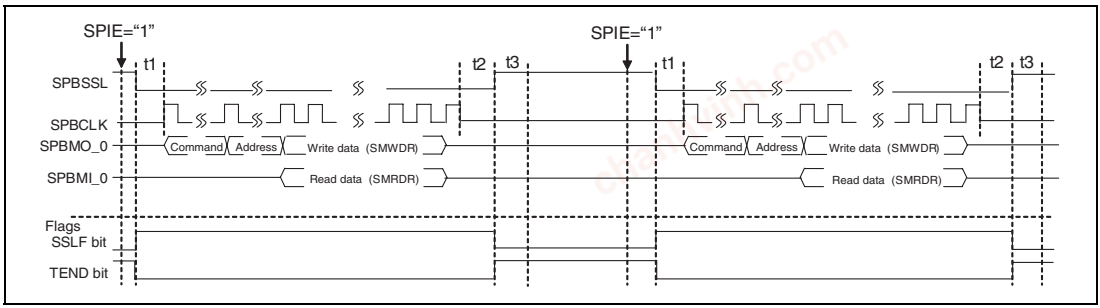

Figure 19.12 SPI Operation Timing

(2) Read/Write Enable

- Read operation: Data can be read by setting the SPIRE bit in SMCR to 1. The read data is stored into SMRDR.
- Write operation: Data can be written by setting the SPIWE bit in SMCR to 1. The data stored in SMWDR is output.

When the data size is set to 1 bit using the SPIDB[1:0] bits in SMENR, data can be transmitted and received by setting the SPIRE and SPIWE bits to 1. However, when the data size is set to 2 or 4 bits by using the SPIDB[1:0] bits, only one of the SPIRE and SPIWE bits should be enabled. The operation is not guaranteed if both the bits are enabled.

chanhvinh.com

(3) Retention of SPBSSL Pin Assertion

By setting the SSLKP bit in SMCR to 1, assertion of the SPBSSL pin can be continued till the next transfer. With this function, the transfer can be carried out continuously with the SPBSSL kept in the asserted state.

Note: When the transfer data size is set to 2 or 4 bits in SPI mode, this function is not available.

The data transfer timing using the SSLKP bit is shown in figure 19.13.

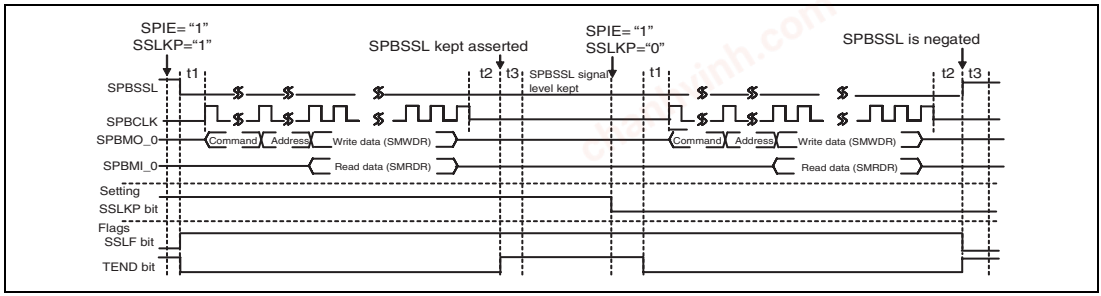

Figure 19.13 Data Transfer Timing using the SSLKP Bit

chanhvinh.com

(4) Initial Setting Flow

An example of an initial setting flow in SPI operating mode is shown in figure 19.14.

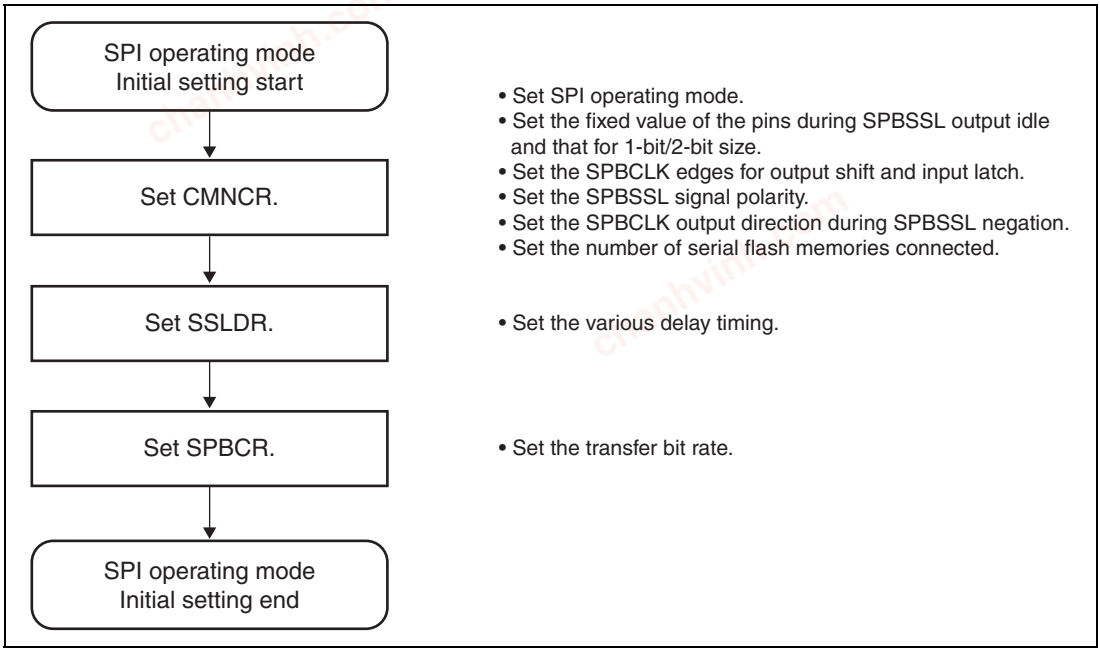

Figure 19.14 Example of Initial Setting Flow in SPI Operating Mode

chanhvinh.com

(5) Data Transfer Setting Flow

An example of a data transfer setting flow in SPI operating mode is shown in figure 19.15.

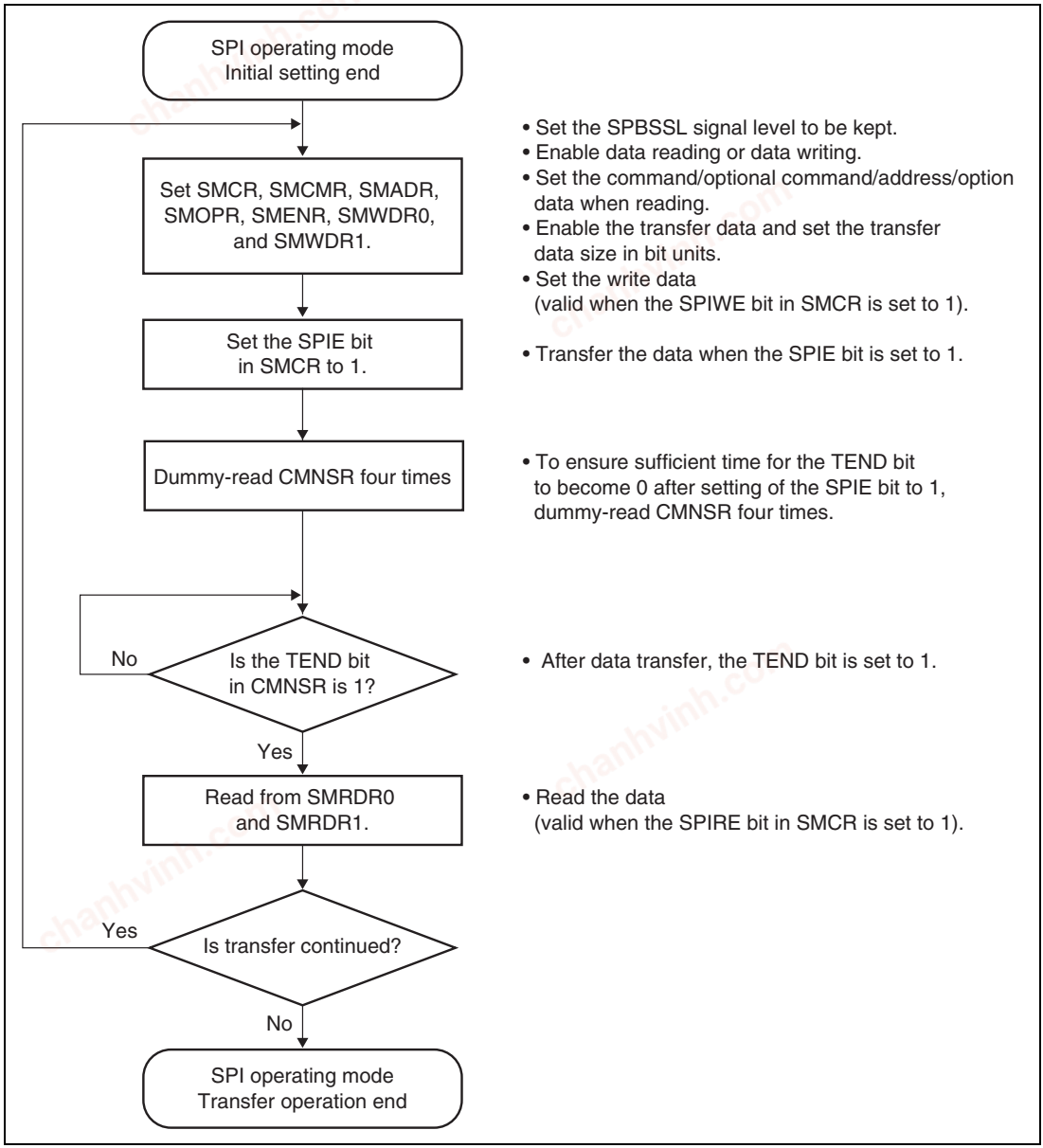

Figure 19.15 Example of a Data Transfer Setting Flow in SPI Operating Mode

chanhvinh.com

19.5.9 Transfer Format

(1) SPBSSL Pin Enable Polarity Control

The enable polarity of the SPBSSL pin can be changed with the SSLP bit in CMNCR.

(2) SPBCLK Output

The SPBCLK output direction during SPBSSL negation can be set with the CPOL bit in CMNCR.

(3) Data Transmission and Reception Timing

The data transmission timing can be set to odd or even edge with the CPHAT bit in CMNCR. Similarly, the data reception timing can be set to odd or even edge with the CPHAR bit in CMNCR.

(4) Delay Period

t1 is the time period from SPBSSL pin assertion to SPBCLK oscillation (clock delay). t2 is the time period till the SPBSSL signal negation after the SPBCLK oscillation is stopped (SPBSSL negation delay). t3 is the time period required to prevent SPBSSL signal assertion for the next transfer after the end of the previous transfer (next access delay). t2 and t3 are set to 1.5 SPBCLK cycles and 1 SPBCLK cycle, respectively.

chanhvinh.com

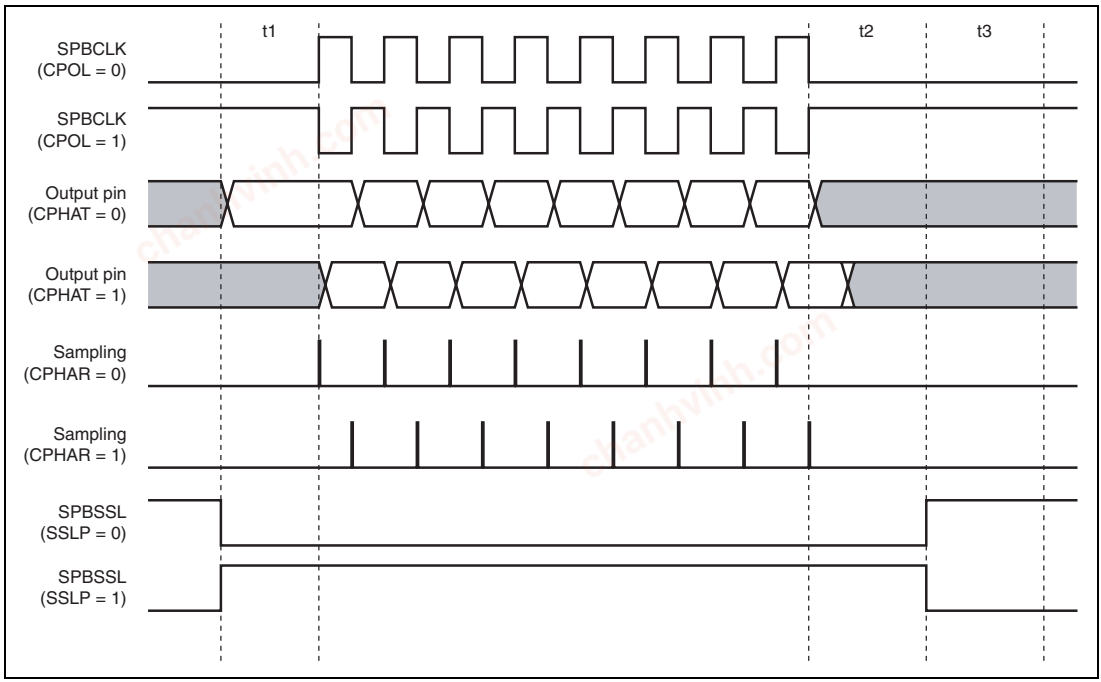

Figure 19.16 Transfer Format

chanhvinh.com

19.5.10 Data Format

This module can input and output data in the order of command, optional command, address, option data, and data.

(1) Data Registers

Table 19.6 shows the input and output data.

Table 19.6 Data Registers

Data		External Address Space Read Operation	SPI Operation
Command (8 bits)		CMD[7:0] bits in DRCMR	CMD[7:0] bits in SMCMR
Optional command (8 bits)		OCMD[7:0] bits in DRCMR	OCMD[7:0] bits in SMCMR
Address (32/24 bits)	BSZ[1:0] = 00 (one flash memory connected)	32 bits: DREAR.EAV[6:1 to 0] bits + lower [25 to 24:0] bits of the read address. 24 bits: Lower [23:0] bits of the read address	32 bits: ADR[31:0] bits in SMADR 24 bits: ADR[23:0] bits in SMADR
	BSZ[1:0] = 01 (two flash memories connected)	32 bits: DREAR.EAV[7:1 to 0] bits + lower [25 to 24:1] bits of the read address. 24 bits: Lower [24:1] bits of the read address	
Option data (8 bits × 4)		DROPR	SMOPR
Transfer data		Normal read: 8, 16, 32, and 64 bits Burst read: 64 × RBURST bits	Read: SMRDR0, SMRDR1 Write: SMWDR0, SMWDR1

chanhvinh.com

(2) Data Enable

In external address space read mode, transfer enable or disable of the command, optional command, address, and option data can be controlled with the CDE, OCDE, ADE[3:0], and OPDE[3:0] bits in DRENR, respectively. Similarly, in SPI operating mode, enable or disable of the command, optional command, address, option data, and transfer data can be controlled with the CDE, OCDE, ADE[3:0], OPDE[3:0], and SPIDE[3:0] bits in SMENR, respectively. However, disabling all the above parameters is prohibited in SPI operating mode. At least one of them must be enabled. For the address and option data in external address space read mode; and the address, option data, and transfer data in SPI operating mode, the enable bit setting allowed is determined according to the transfer data size. For the allowed setting combinations of the enable bits and transfer data size, refer to the description of the pertinent register.

If data is disabled, that data is skipped, and input and output of the next data is carried out. The command, optional command, address, and option data are always output. In external address space read mode, data is always input; and in SPI operating mode, input and output of data is determined based on the settings of the SPIRE and SPIWE bits in SMCR.

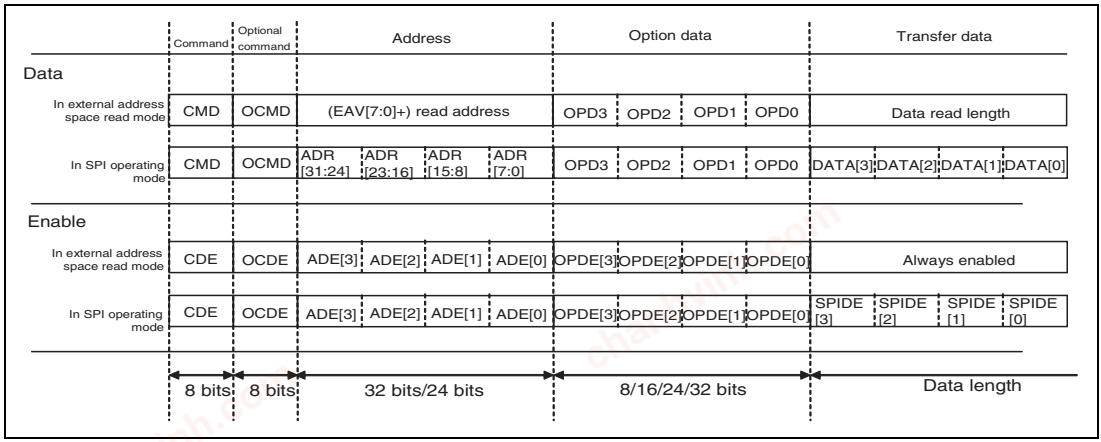

Figure 19.17 Data and Enable

chanhvinh.com

(3) Bit Size

In external address space read mode, the size of the command, optional command, address, option data, and the read data in bit units is respectively controlled with the CDB[1:0], OCDB[1:0], ADB[1:0], OPDB[1:0], DRDB[1:0] bits in DRENR. Similarly, in SPI operating mode, the size of the command, optional command, address, option data, and read write data in bit units is controlled with the CDB[1:0], OCDB[1:0], ADB[1:0], OPDB[1:0], and SPIDB[1:0] bits in SMENR.

(a) 1-bit Size

When the size is set to 1 bit, SPBMI_0 and SPBMI_1 pins will be the input pins and SPBMO_0 and SPBMO_1 pins will be the output pins. SPBIO2_0, SPBIO2_1, SPBIO3_0, and SPBIO3_1 pins are not used.

Figures 19.18 and 19.19 show the transfer format examples.

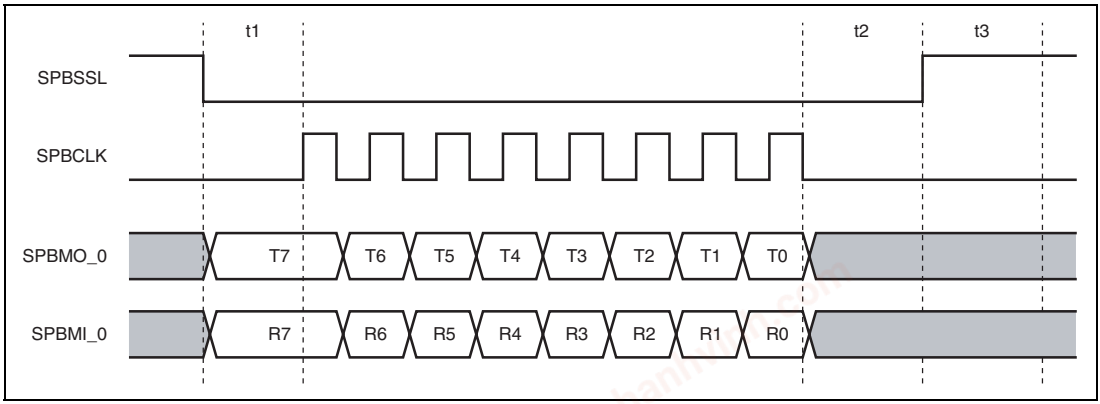

Figure 19.18 Transfer Format Example with 1-Bit Data Size and One Serial Flash Memory Connected

chanhvinh.com

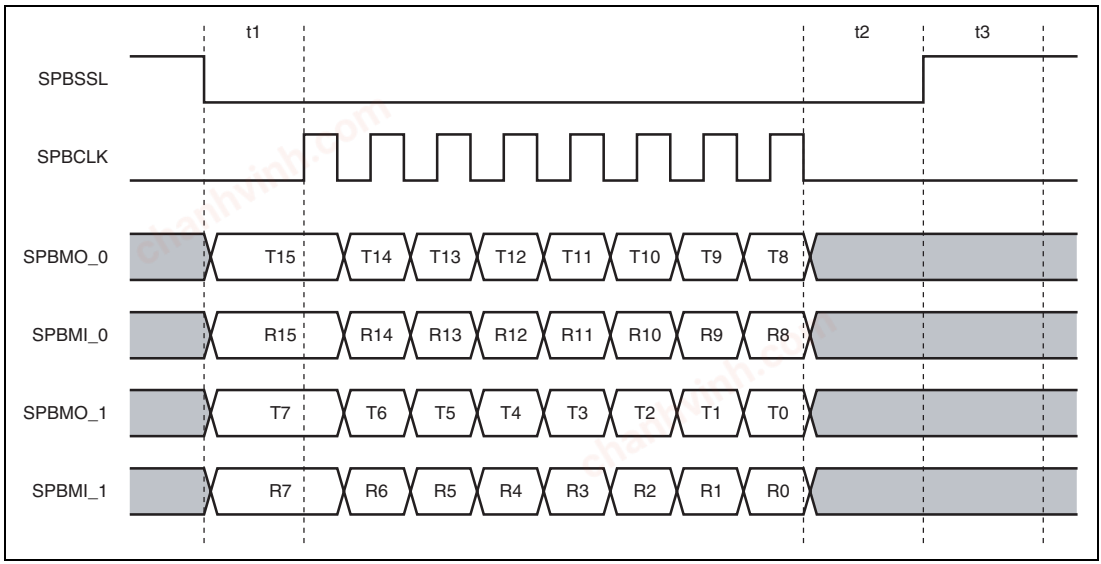

Figure 19.19 Transfer Format Example with 1-Bit Data Size and Two Serial Flash Memories Connected

chanhvinh.com

(b) 2-bit Size

When the size is set to 2 bits, SPBIO0_0, SPBIO0_1, SPBIO1_0, and SPBIO1_1 pins will be either the input pins or the output pins. SPBIO2_0, SPBIO2_1, SPBIO3_0, and SPBIO3_1 pins are not used.

Figures 19.20 and 19.21 show the transfer format examples.

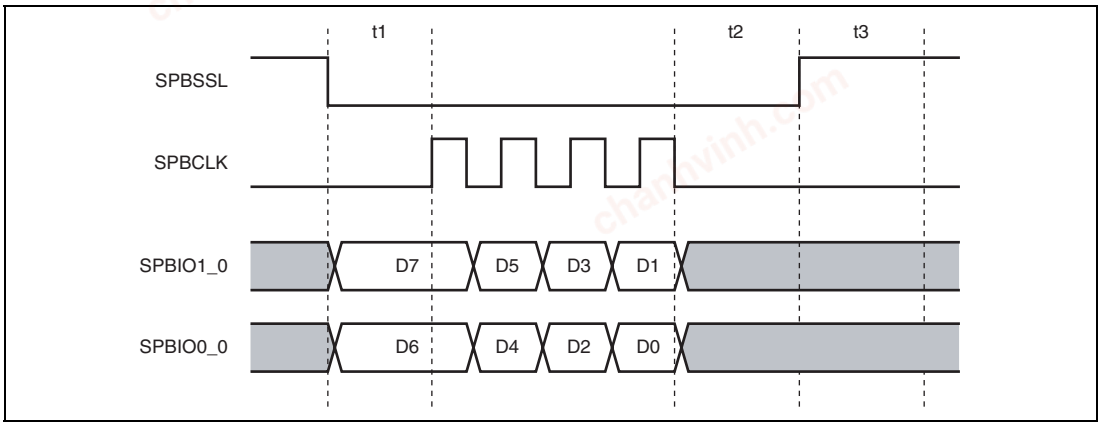

Figure 19.20 Transfer Format Example with 2-Bit Data Size and One Serial Flash Memory Connected

chanhvinh.com

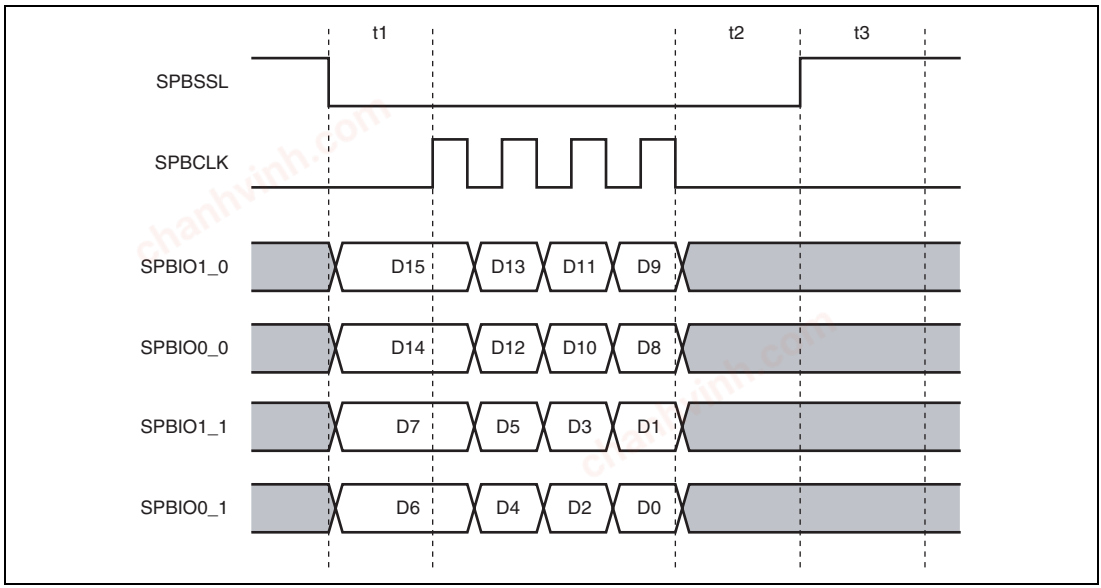

Figure 19.21 Transfer Format Example with 2-Bit Data Size and Two Serial Flash Memories Connected

chanhvinh.com

(c) 4-bit Size

When the size is set to 4 bits, SPBIO0_0, SPBIO0_1, SPBIO1_0, SPBIO1_1, SPBIO2_0, SPBIO2_1, SPBIO3_0, and SPBIO3_1 pins will be either the input pins or the output pins.

Figures 19.22 and 19.23 show the transfer format examples.

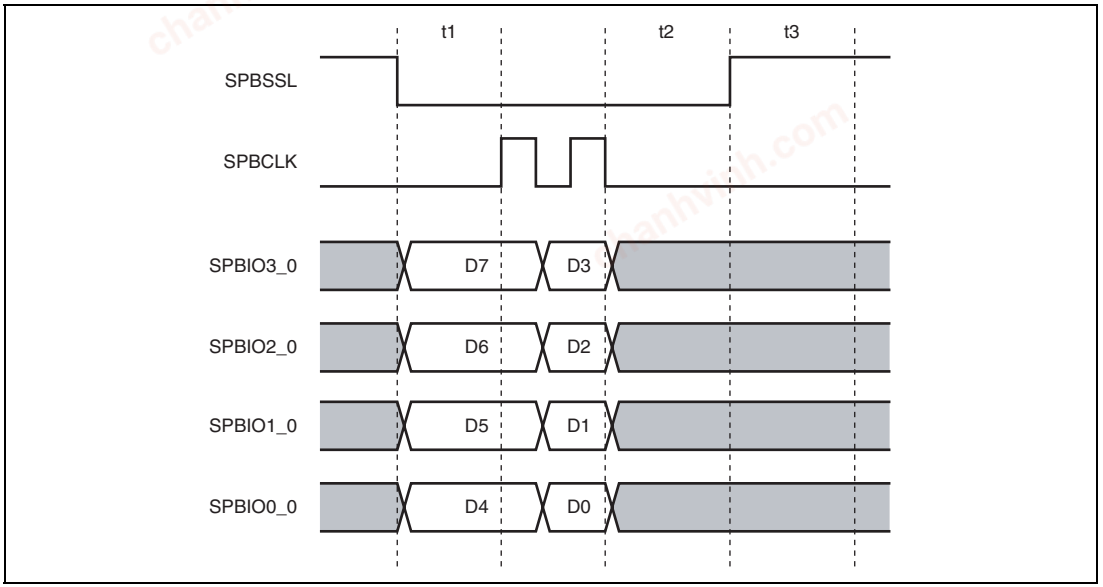

Figure 19.22 Transfer Format Example with 4-Bit Data Size and One Serial Flash Memory Connected

chanhvinh.com

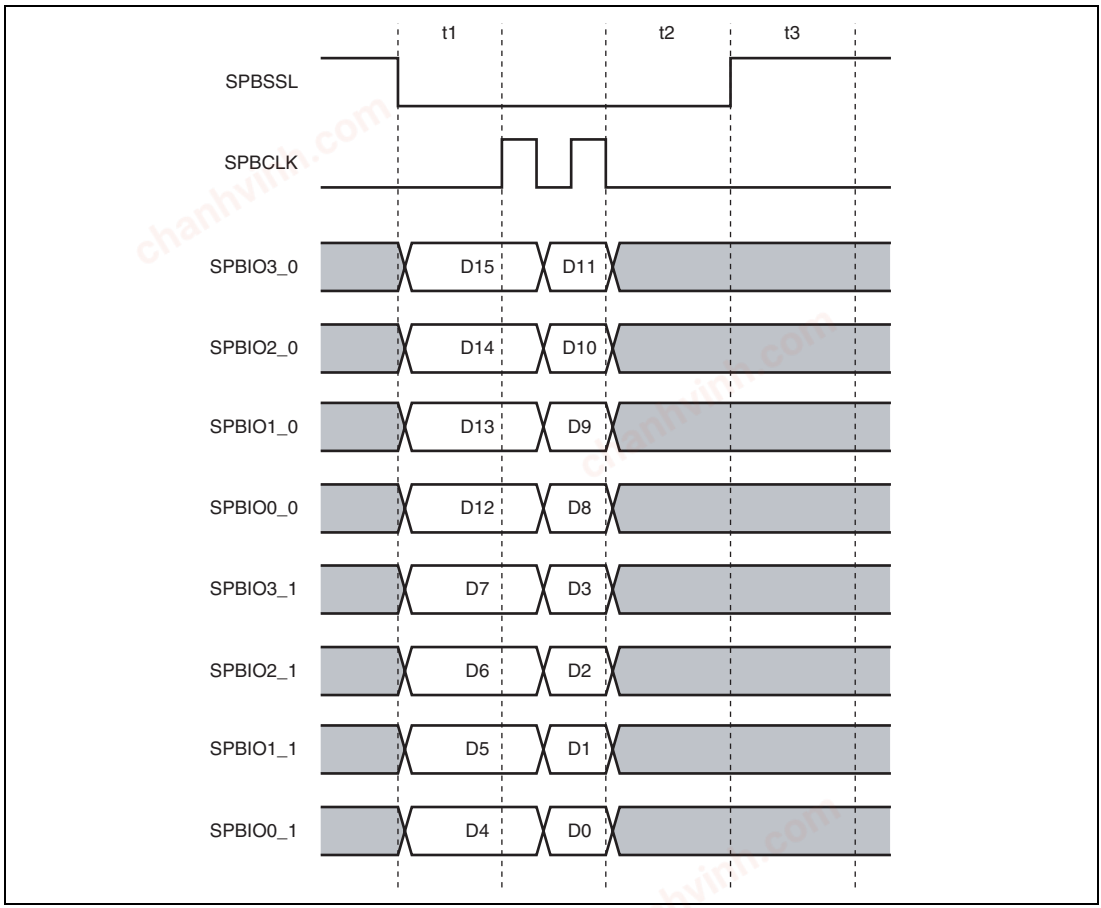

Figure 19.23 Transfer Format Example with 4-Bit Data Size and Two Serial Flash Memories Connected

chanhvinh.com

19.5.11 Data Pin Control

With this module, the status of pins can be automatically changed based on the data size to be used and the read/write settings. The pin status during the SPBSSL negation can be set with the MOIIO3, MOIIO2, MOIIO1, and MOIIO0 bits in CMNCR. The SPBSSL and SPBCLK pins are always output pins. The status of respective pins is specified in tables 19.7 to 19.9.

Table 19.7 Pin Status (1)

		SPBSSL Assertion		
		Command, Optional Command, Address, Option Data		
Pin	SPBSSL Negation	1-bit Size	2-bit Size	4-bit Size
SPBMO_0/ SPBIO0_0, SPBMO_1/ SPBIO0_1	MOIIO0 bit value	Output	Output	Output
SPBMI_0/ SPBIO1_0, SPBMI_1/ SPBIO1_1	MOIIO1 bit value	Hi-Z	Output	Output
SPBIO2_0, SPBIO2_1	MOIIO2 bit value	IO2FV bit value	IO2FV bit value	Output
SPBIO3_0, SPBIO3_1	MOIIO3 bit value	IO3FV bit value	IO3FV bit value	Output

chanhvinh.com

Table 19.8 Pin Status (2)

	Transfer Data					
	External Address Space Read Operation			SPI Operation		
				SPIRE Bit = 1, SPIWE Bit = 0		
Pin	1-bit Size	2-bit Size	4-bit Size	1-bit Size	2-bit Size	4-bit Size
SPBMO_0/ SPBIO0_0, SPBMO_1/ SPBIO0_1	IO0FV bit value	Input	Input	IO0FV bit value	Input	Input
SPBMI_0/ SPBIO1_0, SPBMI_1/ SPBIO1_1	Input	Input	Input	Input	Input	Input
SPBIO2_0, SPBIO2_1	MOIIO2 bit value	MOIIO2 bit value	Input	MOIIO2 bit value	MOIIO2 bit value	Input
SPBIO3_0, SPBIO3_1	MOIIO3 bit value	MOIIO3 bit value	Input	MOIIO3 bit value	MOIIO3 bit value	Input

Table 19.9 Pin Status (3)

	Transfer Data					
	SPI Operation					
	SPIRE Bit = 0, SPIWE Bit = 1			SPIRE Bit = 1, SPIWE Bit = 1		
Pin	1-bit Size	2-bit Size	4-bit Size	1-bit Size	2-bit Size	4-bit Size
SPBMO_0/ SPBIO0_0, SPBMO_1/ SPBIO0_1	Output	Output	Output	Output	Setting prohibited	Setting prohibited
SPBMI_0/ SPBIO1_0, SPBMI_1/ SPBIO1_1	Hi-Z	Output	Output	Input	Setting prohibited	Setting prohibited
SPBIO2_0, SPBIO2_1	MOIIO2 bit value	MOIIO2 bit value	Output	MOIIO2 bit value	Setting prohibited	Setting prohibited
SPBIO3_0, SPBIO3_1	MOIIO3 bit value	MOIIO3 bit value	Output	MOIIO3 bit value	Setting prohibited	Setting prohibited

chanhvinh.com

19.5.12 SPBSSL Pin Control

Negation conditions of the SPBSSL pin are as follows.

(1) External Address Space Read Mode

(a) Normal read operation (RBE bit in DRCR = 0)

SPBSSL negated after completing the data transfer and t2 cycle.

(b) Burst read without automatic SPBSSL negation (RBE bit in DRCR = 1, SSLE bit in DRCR = 0)

SPBSSL negated after completing the data transfer and t2 cycle.

(c) Burst read with automatic SPBSSL negation (RBE bit in DRCR = 1, SSLE bit in DRCR = 1)

- SPBSSL negated after t2 cycle when the read address is not continuous with the previously read address

(2) SPI Operating Mode

(a) SPBSSL pin assertion not retained (SSLKP bit in SMCR = 0)

SPBSSL negated after completing the data transfer and t2 cycle.

(b) SPBSSL pin assertion retained (SSLKP bit in SMCR = 1)

SPBSSL not negated.

When to be negated, data should be transferred after setting the SSLKP bit to 0.

chanhvinh.com

19.5.13 Flags

This module has two flag bits SSLF and TEND in CMNSR. These bits are read-only bits.

(1) SSLF Bit

This bit indicates the SPBSSL pin status. The status is 1 when the SPBSSL is asserted, and the status is 0 when the SPBSSL is negated.

(2) TEND Bit

This bit indicates whether transfer of data is in progress or the transfer of data has ended.

During t1 time period, data transfer, and t2 time period, the TEND bit is read as 0 to indicate that the transfer of data is in progress.

When other than the above, the TEND bit is read as 1 to indicate that transfer of data has ended.

(3) Register Re-writing Timing

The status of the SSLF and TEND bits determines the register re-writing timing. Table 19.10 lists the re-writing timing of various registers.

Table 19.10 Re-writing Timing of Various Registers

Flag	Re-writable Registers	Remarks
SSLF = 0	Registers CMNCR, SSLDR, SPBCR, and DRCR	When the SPBSSL pin is negated
TEND = 1	Registers DRCMR, DREAR, DROPR, DRENR, SMCR, SMCMR, SMADR, SMOPR, SMENR, SMWDR0, and SMWDR1	At the end of transfer

19.6 Usage Note

19.6.1 Note on Transfer Start from SPBSSL Hold State in SPI Operation Mode

In SPI operation mode, set the SPIWE bit in the SMCR register to 1 when starting transfer with command, optional command, address, and option data while the SPBSSL pin is being asserted.

chanhvinh.com

chanhvinh.com
chanhvinh.com
chanhvinh.com

chanhvinh.com

Section 20 I²C Bus Interface 3

The I²C bus interface 3 conforms to and provides a subset of the Philips I²C (Inter-IC) bus interface functions. However, the configuration of the registers that control the I²C bus differs partly from the Philips register configuration.

The I²C bus interface 3 has four channels.

20.1 Features

- Selection of I²C format or clocked synchronous serial format
- Continuous transmission/reception

  Since the shift register, transmit data register, and receive data register are independent from each other, the continuous transmission/reception can be performed.

I²C bus format:

- Start and stop conditions generated automatically in master mode
- Selection of acknowledge output levels when receiving
- Automatic loading of acknowledge bit when transmitting
- Bit synchronization function

  In master mode, the state of SCL is monitored per bit, and the timing is synchronized automatically. If transmission/reception is not yet possible, set the SCL to low until preparations are completed.
- Six interrupt sources

  Transmit data empty (including slave-address match), transmit end, receive data full (including slave-address match), arbitration lost, NACK detection, and stop condition detection
- The direct memory access controller can be activated by a transmit-data-empty request or receive-data-full request to transfer data.
- Direct bus drive

  Two pins, SCL and SDA pins, function as NMOS open-drain outputs when the bus drive function is selected.

Clocked synchronous serial format:

- Four interrupt sources

  Transmit-data-empty, transmit-end, receive-data-full, and overrun error
- The direct memory access controller can be activated by a transmit-data-empty request or receive-data-full request to transfer data.

chanhvinh.com

Figure 20.1 shows a block diagram.

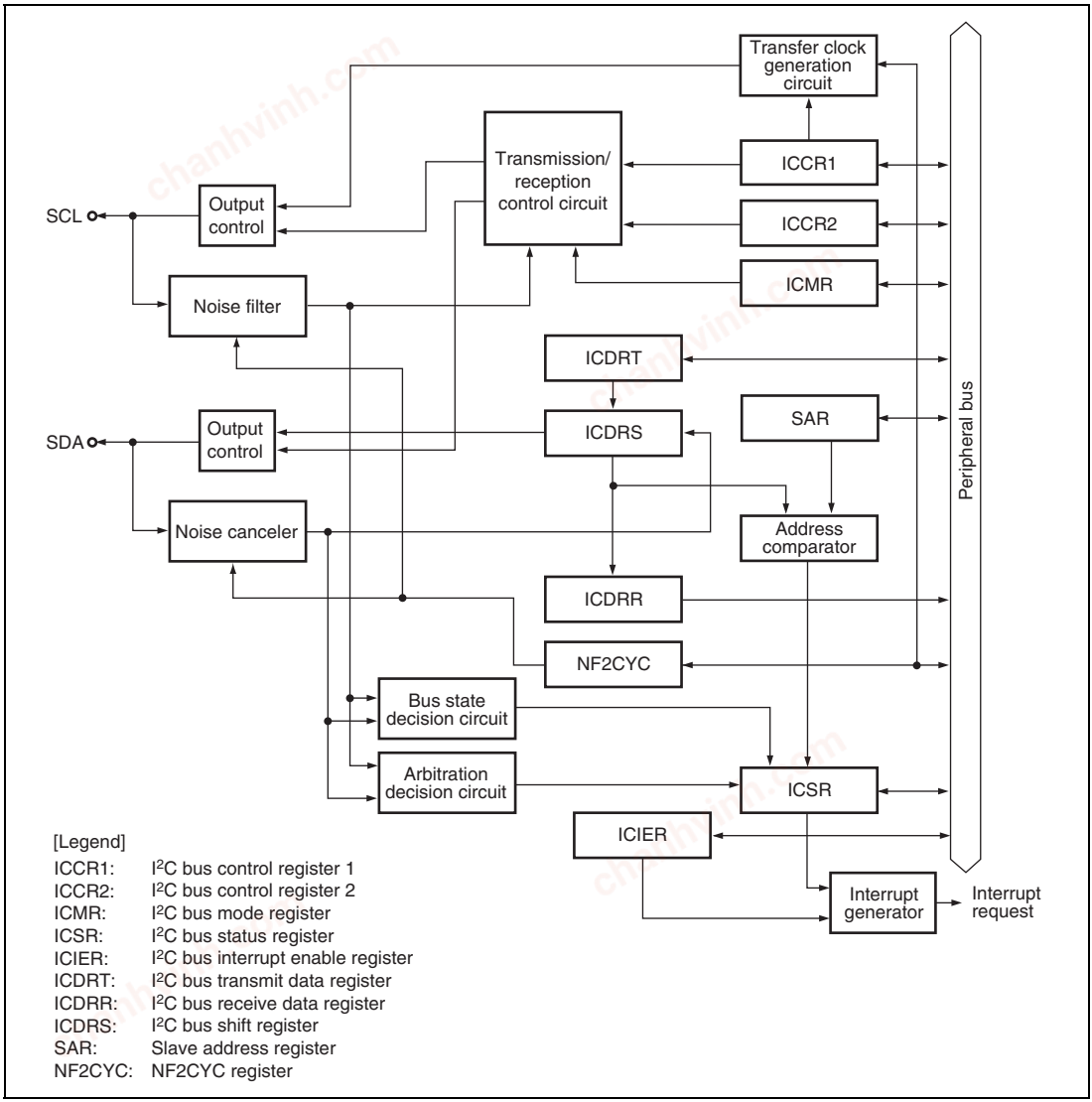

Figure 20.1 Block Diagram

chanhvinh.com

20.2 Input/Output Pins

Table 20.1 shows the pin configuration.

Table 20.1 Pin Configuration

Pin Name	Symbol	I/O	Function
Serial clock	SCL0 to SCL3	I/O	I²C serial clock input/output
Serial data	SDA0 to SDA3	I/O	I²C serial data input/output

Figure 20.2 shows an example of I/O pin connections to external circuits.

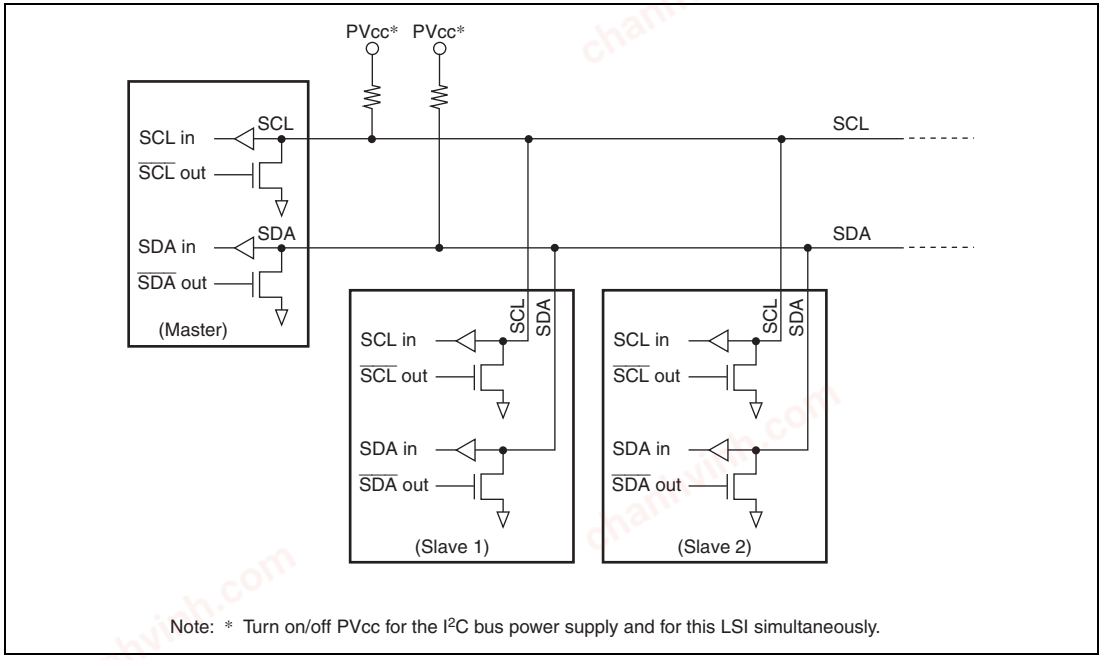

Figure 20.2 External Circuit Connections of I/O Pins

chanhvinh.com

20.3 Register Descriptions

Table 20.2 shows the register configuration.

Table 20.2 Register Configuration

Channel	Register Name	Abbreviation	R/W	Initial Value	Address	Access Size
0	I²C bus control register 1	ICCR1_0	R/W	H'00	H'FFFEE000	8
	I²C bus control register 2	ICCR2_0	R/W	H'7D	H'FFFEE001	8
	I²C bus mode register	ICMR_0	R/W	H'38	H'FFFEE002	8
	I²C bus interrupt enable register	ICIER_0	R/W	H'00	H'FFFEE003	8
	I²C bus status register	ICSR_0	R/W	H'00	H'FFFEE004	8
	Slave address register	SAR_0	R/W	H'00	H'FFFEE005	8
	I²C bus transmit data register	ICDRT_0	R/W	H'FF	H'FFFEE006	8
	I²C bus receive data register	ICDRR_0	R/W	H'FF	H'FFFEE007	8
	NF2CYC register	NF2CYC_0	R/W	H'00	H'FFFEE008	8
1	I²C bus control register 1	ICCR1_1	R/W	H'00	H'FFFEE400	8
	I²C bus control register 2	ICCR2_1	R/W	H'7D	H'FFFEE401	8
	I²C bus mode register	ICMR_1	R/W	H'38	H'FFFEE402	8
	I²C bus interrupt enable register	ICIER_1	R/W	H'00	H'FFFEE403	8
	I²C bus status register	ICSR_1	R/W	H'00	H'FFFEE404	8
	Slave address register	SAR_1	R/W	H'00	H'FFFEE405	8
	I²C bus transmit data register	ICDRT_1	R/W	H'FF	H'FFFEE406	8
	I²C bus receive data register	ICDRR_1	R/W	H'FF	H'FFFEE407	8
	NF2CYC register	NF2CYC_1	R/W	H'00	H'FFFEE408	8
2	I²C bus control register 1	ICCR1_2	R/W	H'00	H'FFFEE800	8
	I²C bus control register 2	ICCR2_2	R/W	H'7D	H'FFFEE801	8
	I²C bus mode register	ICMR_2	R/W	H'38	H'FFFEE802	8
	I²C bus interrupt enable register	ICIER_2	R/W	H'00	H'FFFEE803	8
	I²C bus status register	ICSR_2	R/W	H'00	H'FFFEE804	8
	Slave address register	SAR_2	R/W	H'00	H'FFFEE805	8
	I²C bus transmit data register	ICDRT_2	R/W	H'FF	H'FFFEE806	8
	I²C bus receive data register	ICDRR_2	R/W	H'FF	H'FFFEE807	8
	NF2CYC register	NF2CYC_2	R/W	H'00	H'FFFEE808	8

chanhvinh.com

Channel	Register Name	Abbreviation	R/W	Initial Value	Address	Access Size
3	I²C bus control register 1	ICCR1_3	R/W	H'00	H'FFFEEC00	8
	I²C bus control register 2	ICCR2_3	R/W	H'7D	H'FFFEEC01	8
	I²C bus mode register	ICMR_3	R/W	H'38	H'FFFEEC02	8
	I²C bus interrupt enable register	ICIER_3	R/W	H'00	H'FFFEEC03	8
	I²C bus status register	ICSR_3	R/W	H'00	H'FFFEEC04	8
	Slave address register	SAR_3	R/W	H'00	H'FFFEEC05	8
	I²C bus transmit data register	ICDRT_3	R/W	H'FF	H'FFFEEC06	8
	I²C bus receive data register	ICDRR_3	R/W	H'FF	H'FFFEEC07	8
	NF2CYC register	NF2CYC_3	R/W	H'00	H'FFFEEC08	8

20.3.1 I²C Bus Control Register 1 (ICCR1)

ICCR1 is an 8-bit readable/writable register that enables or disables the I²C bus interface 3, controls transmission or reception, and selects master or slave mode, transmission or reception, and transfer clock frequency in master mode.

Bit:	7	6	5	4	3	2	1	0
	ICE	RCVD	MST	TRS	CKS[3:0]			
Initial value:	0	0	0	0	0	0	0	0
R/W:	R/W	R/W	R/W	R/W	R/W	R/W	R/W	R/W

Bit	Bit Name	Initial Value	R/W	Description
7	ICE	0	R/W	I²C Bus Interface 3 Enable 0: SCL and SDA output is disabled. (Input to SCL and SDA is enabled.) 1: This bit is enabled for transfer operations. (SCL and SDA pins are bus drive state.)
6	RCVD	0	R/W	Reception Disable Enables or disables the next operation when TRS is 0 and ICDRR is read. 0: Enables next reception 1: Disables next reception

chanhvinh.com

Bit	Bit Name	Initial Value	R/W	Description
5	MST	0	R/W	Master/Slave Select
4	TRS	0	R/W	Transmit/Receive Select In master mode with the I²C bus format, when arbitration is lost, MST and TRS are both reset by hardware, causing a transition to slave receive mode. Modification of the TRS bit should be made between transfer frames. When seven bits after the start condition is issued in slave receive mode match the slave address set to SAR and the 8th bit is set to 1, TRS is automatically set to 1. If an overrun error occurs in master receive mode with the clocked synchronous serial format, MST is cleared and the mode changes to slave receive mode. Operating modes are described below according to MST and TRS combination. When clocked synchronous serial format is selected and MST = 1, clock is output. 00: Slave receive mode 01: Slave transmit mode 10: Master receive mode 11: Master transmit mode
3 to 0	CKS[3:0]	0000	R/W	Transfer Clock Select These bits should be set according to the necessary transfer rate (table 20.3) in master mode.

chanhvinh.com

Table 20.3 Transfer Rate

NF2CYC	ICCR1					Transfer Rate (kHz)	
Bit 4	Bit 3	Bit 2	Bit 1	Bit 0			
CKS4	CKS3	CKS2	CKS1	CKS0	Clock	Pϕ = 25.00 MHz	Pϕ = 33.33 MHz
0	0	0	0	0	Pϕ/44	568.18	757.50
				1	Pϕ/52	480.77	640.96
			1	0	Pϕ/64	390.63	520.78
				1	Pϕ/72	347.22	462.92
		1	0	0	Pϕ/84	297.62	396.79
				1	Pϕ/92	271.74	362.28
			1	0	Pϕ/100	250.00	333.30
				1	Pϕ/108	231.48	308.61
	1	0	0	0	Pϕ/176	142.05	189.38
				1	Pϕ/208	120.19	160.24
			1	0	Pϕ/256	97.66	130.20
				1	Pϕ/288	86.81	115.73
		1	0	0	Pϕ/336	74.40	99.20
				1	Pϕ/368	67.93	90.57
			1	0	Pϕ/400	62.50	83.33
				1	Pϕ/432	57.87	77.15
1	0	0	0	0	Pϕ/352	71.02	94.69
				1	Pϕ/416	60.10	80.12
			1	0	Pϕ/512	48.83	65.10
				1	Pϕ/576	43.40	57.86
		1	0	0	Pϕ/672	37.20	49.60
				1	Pϕ/736	33.97	45.29
			1	0	Pϕ/800	31.25	41.66
				1	Pϕ/864	28.94	38.58
	1	0	0	0	Pϕ/704	35.51	47.34
				1	Pϕ/832	30.05	40.06
			1	0	Pϕ/1024	24.41	32.55
				1	Pϕ/1152	21.70	28.93
		1	0	0	Pϕ/1344	18.60	24.80
				1	Pϕ/1472	16.98	22.64
			1	0	Pϕ/1600	15.63	20.83
				1	Pϕ/1728	14.47	19.29

Note: The settings should satisfy external specifications.

chanhvinh.com

20.3.2 I²C Bus Control Register 2 (ICCR2)

ICCR2 is an 8-bit readable/writable register that issues start/stop conditions, manipulates the SDA pin, monitors the SCL pin, and controls reset in the control part of the I²C bus.

Bit:	7	6	5	4	3	2	1	0
	BBSY	SCP	SDAO	SDAOP	SCLO	-	IICRST	-
Initial value:	0	1	1	1	1	1	0	1
R/W:	R/W	R/W	R/W	R/W	R	R	R/W	R

Bit	Bit Name	Initial Value	R/W	Description
7	BBSY	0	R/W	Bus Busy Enables to confirm whether the I²C bus is occupied or released and to issue start/stop conditions in master mode. With the clocked synchronous serial format, this bit is always read as 0. With the I²C bus format, this bit is set to 1 when the SDA level changes from high to low under the condition of SCL = high, assuming that the start condition has been issued. This bit is cleared to 0 when the SDA level changes from low to high under the condition of SCL = high, assuming that the stop condition has been issued. Write 1 to BBSY and 0 to SCP to issue a start condition. Follow this procedure when also re-transmitting a start condition. Write 0 in BBSY and 0 in SCP to issue a stop condition.
6	SCP	1	R/W	Start/Stop Issue Condition Disable Controls the issue of start/stop conditions in master mode. To issue a start condition, write 1 in BBSY and 0 in SCP. A retransmit start condition is issued in the same way. To issue a stop condition, write 0 in BBSY and 0 in SCP. This bit is always read as 1. Even if 1 is written to this bit, the data will not be stored.

chanhvinh.com

Bit	Bit Name	Initial Value	R/W	Description
5	SDAO	1	R/W	SDA Output Value Control This bit is used with SDAOP when modifying output level of SDA. This bit should not be manipulated during transfer. 0: When reading, SDA pin outputs low. When writing, SDA pin is changed to output low. 1: When reading, SDA pin outputs high. When writing, SDA pin is changed to output Hi-Z (outputs high by external pull-up resistance).
4	SDAOP	1	R/W	SDAO Write Protect Controls change of output level of the SDA pin by modifying the SDAO bit. To change the output level, clear SDAO and SDAOP to 0 or set SDAO to 1 and clear SDAOP to 0. This bit is always read as 1.
3	SCLO	1	R	SCL Output Level Monitors SCL output level. When SCLO is 1, SCL pin outputs high. When SCLO is 0, SCL pin outputs low.
2	—	1	R	Reserved This bit is always read as 1. The write value should always be 1.
1	IICRST	0	R/W	Control Part Reset Resets bits BC[2:0] in ICMR and internal circuits. If this bit is set to 1 when hang-up occurs because of communication failure during I²C bus operation, bits BC[2:0] in ICMR and internal circuits can be reset.
0	—	1	R	Reserved This bit is always read as 1. The write value should always be 1.

chanhvinh.com

20.3.3 I²C Bus Mode Register (ICMR)

ICMR is an 8-bit readable/writable register that selects whether the MSB or LSB is transferred first, performs master mode wait control, and selects the transfer bit count.

Bits BC[2:0] are initialized to H'0 by the IICRST bit in ICCR2.

Bit:	7	6	5	4	3	2	1	0
	MLS	-	-	-	BCWP	BC[2:0]		
Initial value:	0	0	1	1	1	0	0	0
R/W:	R/W	R	R	R	R/W	R/W	R/W	R/W

Bit	Bit Name	Initial Value	R/W	Description
7	MLS	0	R/W	MSB-First/LSB-First Select 0: MSB-first 1: LSB-first Set this bit to 0 when the I²C bus format is used.
6	—	0	R	Reserved This bit is always read as 0. The write value should always be 0.
5, 4	—	All 1	R	Reserved These bits are always read as 1. The write value should always be 1.
3	BCWP	1	R/W	BC Write Protect Controls the BC[2:0] modifications. When modifying the BC[2:0] bits, this bit should be cleared to 0. In clocked synchronous serial mode, the BC[2:0] bits should not be modified. 0: When writing, values of the BC[2:0] bits are set. 1: When reading, 1 is always read. When writing, settings of the BC[2:0] bits are invalid.

chanhvinh.com

Bit	Bit Name	Initial Value	R/W	Description
2 to 0	BC[2:0]	000	R/W	Bit Counter These bits specify the number of bits to be transferred next. When read, the remaining number of transfer bits is indicated. With the I²C bus format, the data is transferred with one addition acknowledge bit. Should be made between transfer frames. If these bits are set to a value other than B'000, the setting should be made while the SCL pin is low. The bit value returns to B'000 automatically at the end of a data transfer including the acknowledge bit. And the value becomes B'111 automatically after the stop condition detection. These bits are cleared by a power-on reset and in software standby mode and module standby mode. These bits are also cleared by setting the IICRST bit of ICCR2 to 1. With the clocked synchronous serial format, these bits should not be modified. I²C Bus Format / Clocked Synchronous Serial Format 000: 9 bits / 000: 8 bits 001: 2 bits / 001: 1 bit 010: 3 bits / 010: 2 bits 011: 4 bits / 011: 3 bits 100: 5 bits / 100: 4 bits 101: 6 bits / 101: 5 bits 110: 7 bits / 110: 6 bits 111: 8 bits / 111: 7 bits

chanhvinh.com

20.3.4 I²C Bus Interrupt Enable Register (ICIER)

ICIER is an 8-bit readable/writable register that enables or disables interrupt sources and acknowledge bits, sets acknowledge bits to be transferred, and confirms acknowledge bits received.

Bit:	7	6	5	4	3	2	1	0
	TIE	TEIE	RIE	NAKIE	STIE	ACKE	ACKBR	ACKBT
Initial value:	0	0	0	0	0	0	0	0
R/W:	R/W	R/W	R/W	R/W	R/W	R/W	R	R/W

Bit	Bit Name	Initial Value	R/W	Description
7	TIE	0	R/W	Transmit Interrupt Enable When the TDRE bit in ICSR is set to 1 or 0, this bit enables or disables the transmit data empty interrupt (TXI). 0: Transmit data empty interrupt request (TXI) is disabled. 1: Transmit data empty interrupt request (TXI) is enabled.
6	TEIE	0	R/W	Transmit End Interrupt Enable Enables or disables the transmit end interrupt (TEI) at the rising of the ninth clock while the TDRE bit in ICSR is 1. TEI can be canceled by clearing the TEND bit or the TEIE bit to 0. 0: Transmit end interrupt request (TEI) is disabled. 1: Transmit end interrupt request (TEI) is enabled.
5	RIE	0	R/W	Receive Interrupt Enable Enables or disables the receive data full interrupt request (RXI) when receive data is transferred from ICDRS to ICDRR and the RDRF bit in ICSR is set to 1. RXI can be canceled by clearing the RDRF or RIE bit to 0. 0: Receive data full interrupt request (RXI) are disabled. 1: Receive data full interrupt request (RXI) are enabled.

chanhvinh.com

Bit	Bit Name	Initial Value	R/W	Description
4	NAKIE	0	R/W	NACK Receive Interrupt Enable Enables or disables the NACK detection and arbitration lost/overrun error interrupt request (NAKI) when the NACKF or AL/OVE bit in ICSR is set. NAKI can be canceled by clearing the NACKF, AL/OVE, or NAKIE bit to 0. 0: NACK receive interrupt request (NAKI) is disabled. 1: NACK receive interrupt request (NAKI) is enabled.
3	STIE	0	R/W	Stop Condition Detection Interrupt Enable Enables or disables the stop condition detection interrupt request (STPI) when the STOP bit in ICSR is set. 0: Stop condition detection interrupt request (STPI) is disabled. 1: Stop condition detection interrupt request (STPI) is enabled.
2	ACKE	0	R/W	Acknowledge Bit Judgment Select 0: The value of the receive acknowledge bit is ignored, and continuous transfer is performed. 1: If the receive acknowledge bit is 1, continuous transfer is halted.
1	ACKBR	0	R	Receive Acknowledge In transmit mode, this bit stores the acknowledge data that are returned by the receive device. This bit cannot be modified. This bit can be canceled by setting the BBSY bit in ICCR2 to 1. 0: Receive acknowledge = 0 1: Receive acknowledge = 1
0	ACKBT	0	R/W	Transmit Acknowledge In receive mode, this bit specifies the bit to be sent at the acknowledge timing. 0: 0 is sent at the acknowledge timing. 1: 1 is sent at the acknowledge timing.

chanhvinh.com

20.3.5 I²C Bus Status Register (ICSR)

ICSR is an 8-bit readable/writable register that confirms interrupt request flags and their status.

Bit:	7	6	5	4	3	2	1	0
	TDRE	TEND	RDRF	NACKF	STOP	AL/OVE	AAS	ADZ
Initial value:	0	0	0	0	0	0	0	0
R/W:	R/W	R/W	R/W	R/W	R/W	R/W	R/W	R/W

Bit	Bit Name	Initial Value	R/W	Description
7	TDRE	0	R/W	Transmit Data Register Empty [Clearing conditions] • When 0 is written in TDRE after reading TDRE = 1 • When data is written to ICDRT [Setting conditions] • When data is transferred from ICDRT to ICDRS and ICDRT becomes empty • When TRS is set • When the start condition (including retransmission) is issued • When slave mode is changed from receive mode to transmit mode
6	TEND	0	R/W	Transmit End [Clearing conditions] • When 0 is written in TEND after reading TEND = 1 • When data is written to ICDRT [Setting conditions] • When the ninth clock of SCL rises with the I²C bus format while the TDRE flag is 1 • When the final bit of transmit frame is sent with the clocked synchronous serial format

chanhvinh.com

Bit	Bit Name	Initial Value	R/W	Description
5	RDRF	0	R/W	Receive Data Full [Clearing conditions] • When 0 is written in RDRF after reading RDRF = 1 • When ICDRR is read [Setting condition] • When a receive data is transferred from ICDRS to ICDRR
4	NACKF	0	R/W	No Acknowledge Detection Flag [Clearing condition] • When 0 is written in NACKF after reading NACKF = 1 [Setting condition] • When no acknowledge is detected from the receive device in transmission while the ACKE bit in ICIER is 1
3	STOP	0	R/W	Stop Condition Detection Flag [Clearing condition] • When 0 is written in STOP after reading STOP = 1 [Setting condition] • When a stop condition is detected after frame transfer is completed

chanhvinh.com

Bit	Bit Name	Initial Value	R/W	Description
2	AL/OVE	0	R/W	Arbitration Lost Flag/Overrun Error Flag Indicates that arbitration was lost in master mode with the I²C bus format and that the final bit has been received while RDRF = 1 with the clocked synchronous format. When two or more master devices attempt to seize the bus at nearly the same time, if the I²C bus interface 3 detects data differing from the data it sent, it sets AL to 1 to indicate that the bus has been occupied by another master. [Clearing condition] • When 0 is written in AL/OVE after reading AL/OVE = 1 [Setting conditions] • If the internal SDA and SDA pin disagree at the rise of SCL in master transmit mode • When the SDA pin outputs high in master mode while a start condition is detected • When the final bit is received with the clocked synchronous format while RDRF = 1
1	AAS	0	R/W	Slave Address Recognition Flag In slave receive mode, this flag is set to 1 if the first frame following a start condition matches bits SVA[6:0] in SAR. [Clearing condition] • When 0 is written in AAS after reading AAS = 1 [Setting conditions] • When the slave address is detected in slave receive mode • When the general call address is detected in slave receive mode.
0	ADZ	0	R/W	General Call Address Recognition Flag This bit is valid in slave receive mode with the I²C bus format. [Clearing condition] • When 0 is written in ADZ after reading ADZ = 1 [Setting condition] • When the general call address is detected in slave receive mode

chanhvinh.com

20.3.6 Slave Address Register (SAR)

SAR is an 8-bit readable/writable register that selects the communications format and sets the slave address. In slave mode with the I²C bus format, if the upper seven bits of SAR match the upper seven bits of the first frame received after a start condition, this module operates as the slave device.

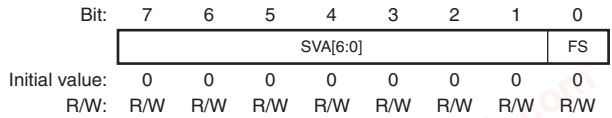

Bit	Bit Name	Initial Value	R/W	Description
7 to 1	SVA[6:0]	0000000	R/W	Slave Address These bits set a unique address in these bits, differing form the addresses of other slave devices connected to the I²C bus.
0	FS	0	R/W	Format Select 0: I²C bus format is selected 1: Clocked synchronous serial format is selected

20.3.7 I²C Bus Transmit Data Register (ICDRT)

ICDRT is an 8-bit readable/writable register that stores the transmit data. When ICDRT detects the space in the shift register (ICDRS), it transfers the transmit data which is written in ICDRT to ICDRS and starts transferring data. If the next transfer data is written to ICDRT while transferring data of ICDRS, continuous transfer is possible.

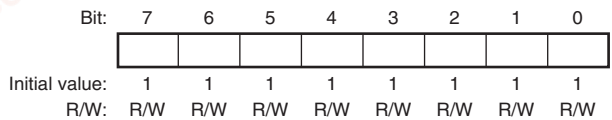

chanhvinh.com

20.3.8 I²C Bus Receive Data Register (ICDRR)

ICDRR is an 8-bit register that stores the receive data. When data of one byte is received, ICDRR transfers the receive data from ICDRS to ICDRR and the next data can be received. ICDRR is a receive-only register, therefore the CPU cannot write to this register.

Bit:	7	6	5	4	3	2	1	0
Initial value:	1	1	1	1	1	1	1	1
R/W:	R/W	R/W	R/W	R/W	R/W	R/W	R/W	R/W

20.3.9 I²C Bus Shift Register (ICDRS)

ICDRS is a register that is used to transfer/receive data. In transmission, data is transferred from ICDRT to ICDRS and the data is sent from the SDA pin. In reception, data is transferred from ICDRS to ICDRR after data of one byte is received. This register cannot be read directly from the CPU.

Bit:	7	6	5	4	3	2	1	0
Initial value:	-	-	-	-	-	-	-	-
R/W:	-	-	-	-	-	-	-	-

chanhvinh.com

20.3.10 NF2CYC Register (NF2CYC)

NF2CYC is an 8-bit readable/writable register that selects a transfer clock and the range of the noise filtering for the SCL and SDA pins. For details of the noise filter, see section 20.4.7, Noise Filter.

Bit:	7	6	5	4	3	2	1	0
	-	-	-	CKS4	-	-	PRS	NF2CYC
Initial value:	0	0	0	0	0	0	0	0
R/W:	R	R	R	R/W	R	R	R/W	R/W

Bit	Bit Name	Initial Value	R/W	Description
7 to 5	—	All 0	R	Reserved These bits are always read as 0. The write value should always be 0.
4	CKS4	0	R/W	Transfer Clock Select This bit should be set according to the necessary transfer rate (table 20.3) in master mode.
3, 2	—	All 0	R	Reserved These bits are always read as 0. The write value should always be 0.
1	PRS	0	R/W	Pulse Width Ratio Select Specifies the ratio of the high-level period to the low-level period for the SCL signal. 0: The ratio of high to low is 0.5 to 0.5. 1: The ratio of high to low is about 0.4 to 0.6.
0	NF2CYC	0	R/W	Noise Filtering Range Select 0: The noise less than one cycle of the peripheral clock can be filtered out 1: The noise less than two cycles of the peripheral clock can be filtered out

chanhvinh.com

20.4 Operation

The I²C bus interface 3 can communicate either in I²C bus mode or clocked synchronous serial mode by setting FS in SAR.

20.4.1 I²C Bus Format

Figure 20.3 shows the I²C bus formats. Figure 20.4 shows the I²C bus timing. The first frame following a start condition always consists of eight bits.

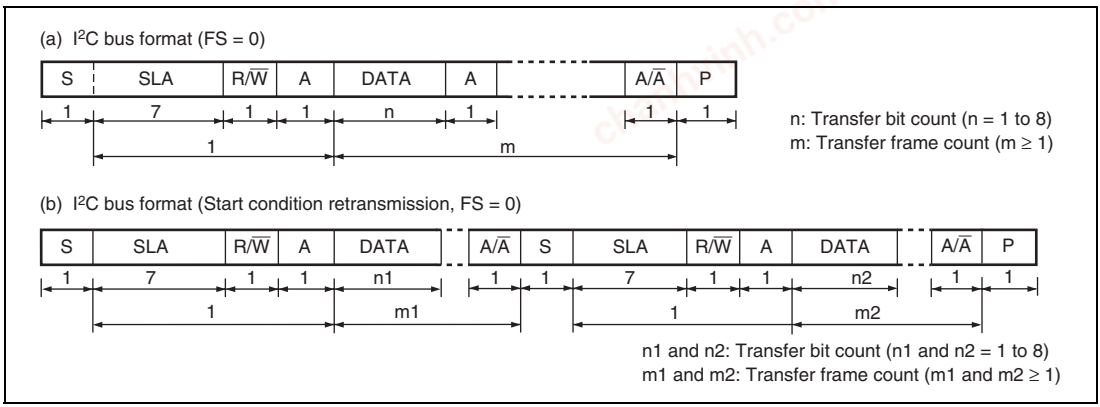

Figure 20.3 I²C Bus Formats

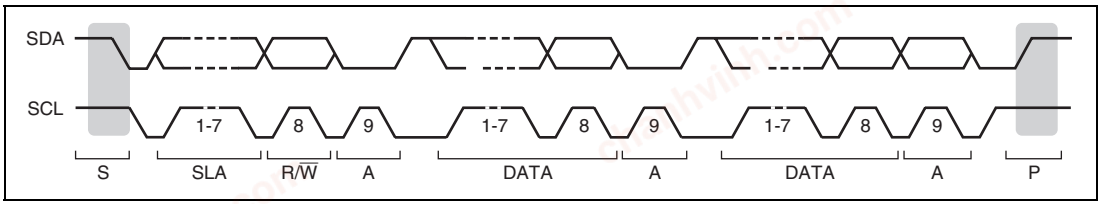

Figure 20.4 I²C Bus Timing

[Legend]

S: Start condition. The master device drives SDA from high to low while SCL is high.

SLA: Slave address

R/W: Indicates the direction of data transfer: from the slave device to the master device when R/W is 1, or from the master device to the slave device when R/W is 0.

A: Acknowledge. The receive device drives SDA to low.

DATA: Transfer data

P: Stop condition. The master device drives SDA from low to high while SCL is high.

chanhvinh.com

20.4.2 Master Transmit Operation

In master transmit mode, the master device outputs the transmit clock and transmit data, and the slave device returns an acknowledge signal. For master transmit mode operation timing, refer to figures 20.5 and 20.6. The transmission procedure and operations in master transmit mode are described below.

1. Set the ICE bit in ICCR1 to 1. Also, set bits CKS[3:0] in ICCR1. (Initial setting)
2. Read the BBSY flag in ICCR2 to confirm that the bus is released. Set the MST and TRS bits in ICCR1 to select master transmit mode. Then, write 1 to BBSY and 0 to SCP. (Start condition issued) This generates the start condition.
3. After confirming that TDRE in ICSR has been set, write the transmit data (the first byte data show the slave address and R/$\overline{W}$) to ICDRT. At this time, TDRE is automatically cleared to 0, and data is transferred from ICDRT to ICDRS. TDRE is set again.
4. When transmission of one byte data is completed while TDRE is 1, TEND in ICSR is set to 1 at the rise of the 9th transmit clock pulse. Read the ACKBR bit in ICIER, and confirm that the slave device has been selected. Then, write second byte data to ICDRT. When ACKBR is 1, the slave device has not been acknowledged, so issue the stop condition. To issue the stop condition, write 0 to BBSY and SCP. SCL is fixed low until the transmit data is prepared or the stop condition is issued.
5. The transmit data after the second byte is written to ICDRT every time TDRE is set.
6. Write the number of bytes to be transmitted to ICDRT. Wait until TEND is set (the end of last byte data transmission) while TDRE is 1, or wait for NACK (NACKF in ICSR = 1) from the receive device while ACKE in ICIER is 1. Then, issue the stop condition to clear TEND or NACKF.
7. When the STOP bit in ICSR is set to 1, the operation returns to the slave receive mode.

chanhvinh.com

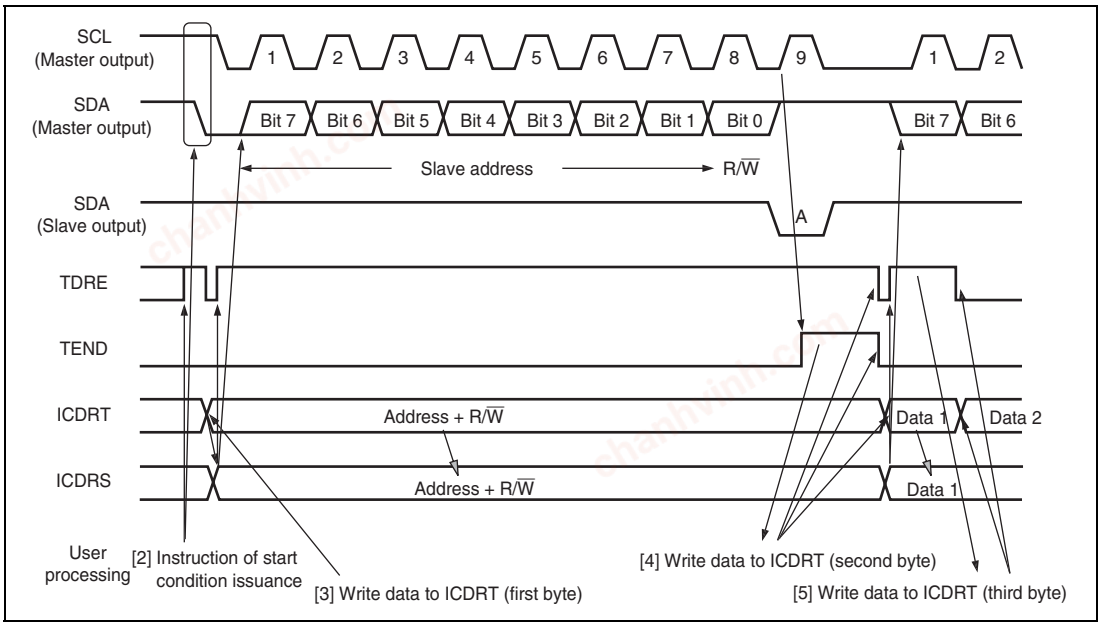

Figure 20.5 Master Transmit Mode Operation Timing (1)

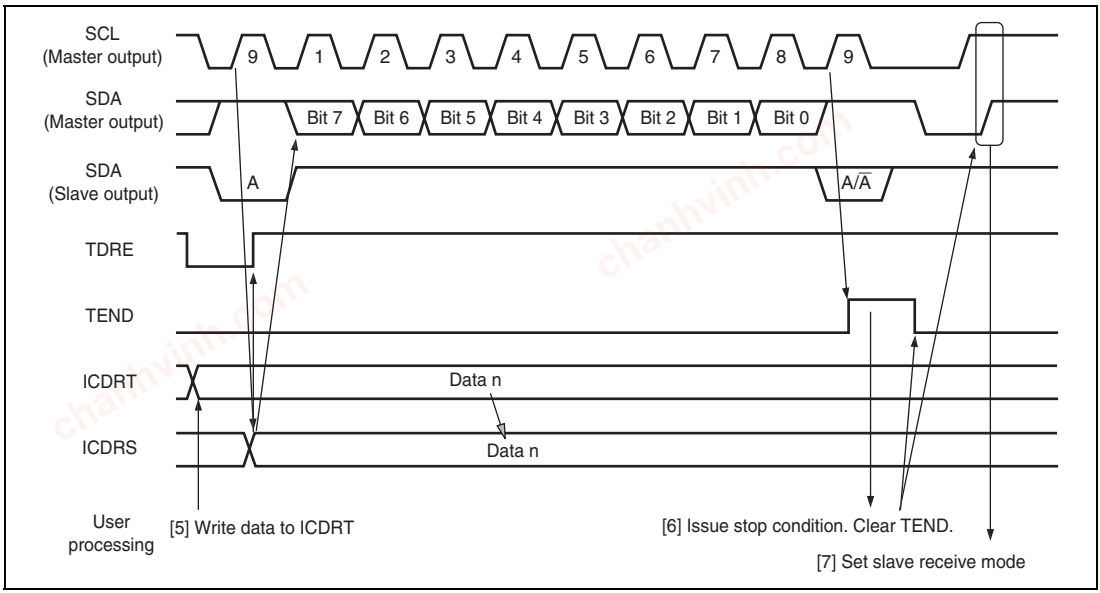

Figure 20.6 Master Transmit Mode Operation Timing (2)

chanhvinh.com

20.4.3 Master Receive Operation

In master receive mode, the master device outputs the receive clock, receives data from the slave device, and returns an acknowledge signal. For master receive mode operation timing, refer to figures 20.7 and 20.8. The reception procedure and operations in master receive mode are shown below.

1. Clear the TEND bit in ICSR to 0, then clear the TRS bit in ICCR1 to 0 to switch from master transmit mode to master receive mode. Then, clear the TDRE bit to 0.
2. When ICDRR is read (dummy data read), reception is started, and the receive clock is output, and data received, in synchronization with the internal clock. The master device outputs the level specified by ACKBT in ICIER to SDA, at the 9th receive clock pulse.
3. After the reception of first frame data is completed, the RDRF bit in ICSR is set to 1 at the rise of 9th receive clock pulse. At this time, the receive data is read by reading ICDRR, and RDRF is cleared to 0.
4. The continuous reception is performed by reading ICDRR every time RDRF is set. If 8th receive clock pulse falls after reading ICDRR by the other processing while RDRF is 1, SCL is fixed low until ICDRR is read.
5. If next frame is the last receive data, set the RCVD bit in ICCR1 to 1 before reading ICDRR. This enables the issuance of the stop condition after the next reception.
6. When the RDRF bit is set to 1 at rise of the 9th receive clock pulse, issue the stage condition.
7. When the STOP bit in ICSR is set to 1, read ICDRR. Then clear the RCVD bit to 0.
8. The operation returns to the slave receive mode.

Note: If only one byte is received, read ICDRR (dummy-read) after the RCVD bit in ICCR1 is set.

chanhvinh.com

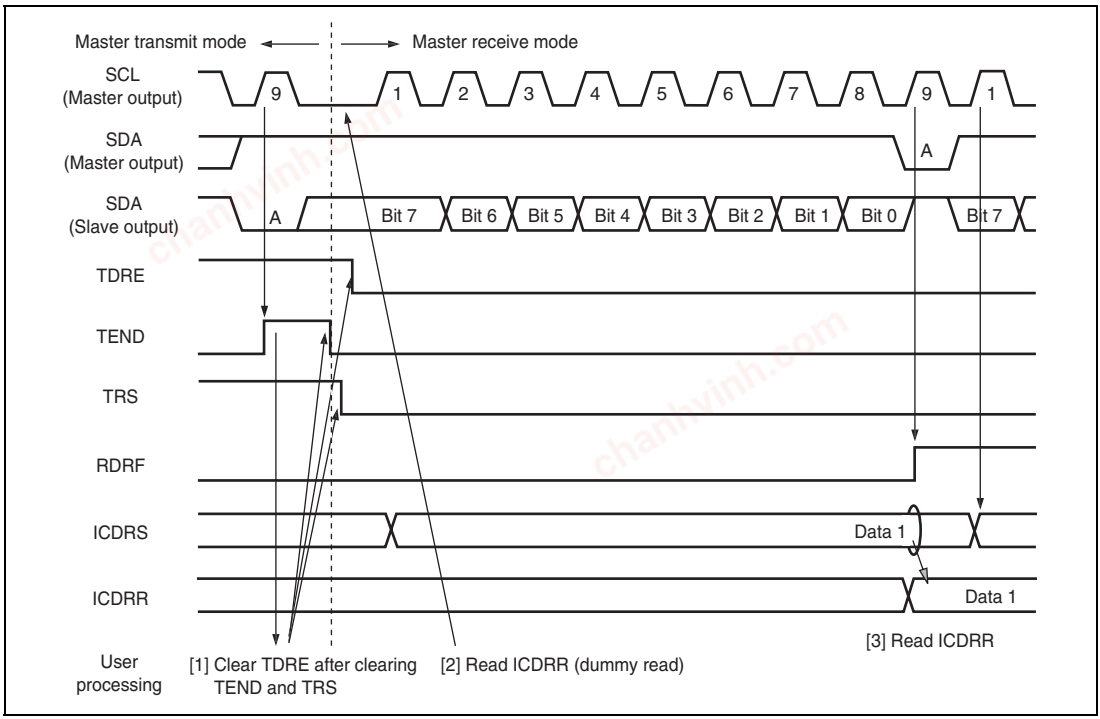

Figure 20.7 Master Receive Mode Operation Timing (1)

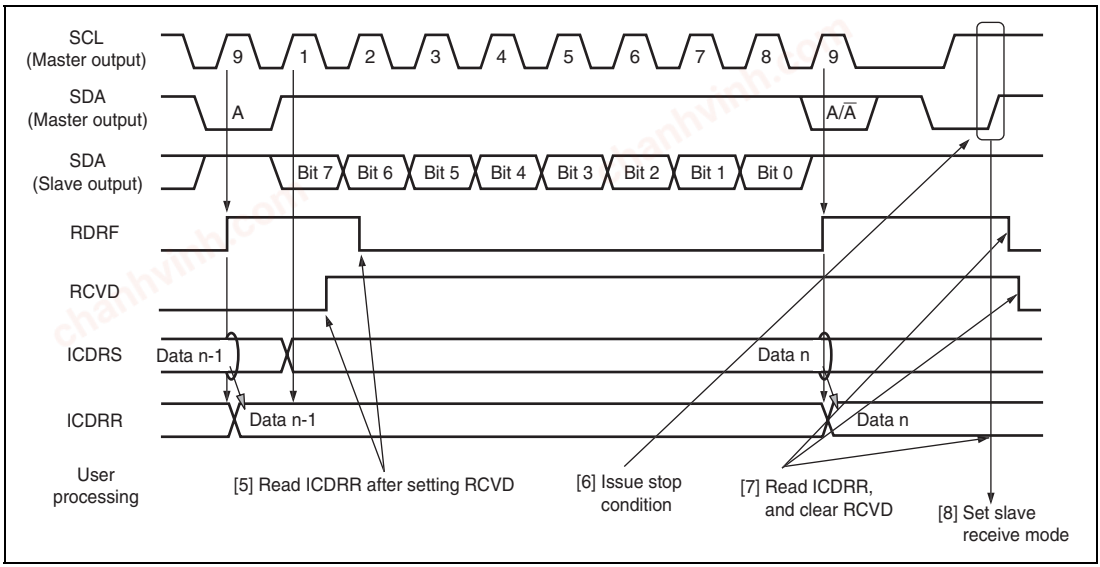

Figure 20.8 Master Receive Mode Operation Timing (2)

chanhvinh.com

20.4.4 Slave Transmit Operation

In slave transmit mode, the slave device outputs the transmit data, while the master device outputs the receive clock and returns an acknowledge signal. For slave transmit mode operation timing, refer to figures 20.9 and 20.10.

The transmission procedure and operations in slave transmit mode are described below.

1. Set the ICE bit in ICCR1 to 1. Set bits CKS[3:0] in ICCR1. (Initial setting) Set the MST and TRS bits in ICCR1 to select slave receive mode, and wait until the slave address matches.
2. When the slave address matches in the first frame following detection of the start condition, the slave device outputs the level specified by ACKBT in ICIER to SDA, at the rise of the 9th clock pulse. At this time, if the 8th bit data (R/W) is 1, the TRS bit in ICCR1 and the TDRE bit in ICSR are set to 1, and the mode changes to slave transmit mode automatically. The continuous transmission is performed by writing transmit data to ICDRT every time TDRE is set.
3. If TDRE is set after writing last transmit data to ICDRT, wait until TEND in ICSR is set to 1, with TDRE = 1. When TEND is set, clear TEND.
4. Clear TRS for the end processing, and read ICDRR (dummy read). SCL is opened.
5. Clear TDRE.

chanhvinh.com

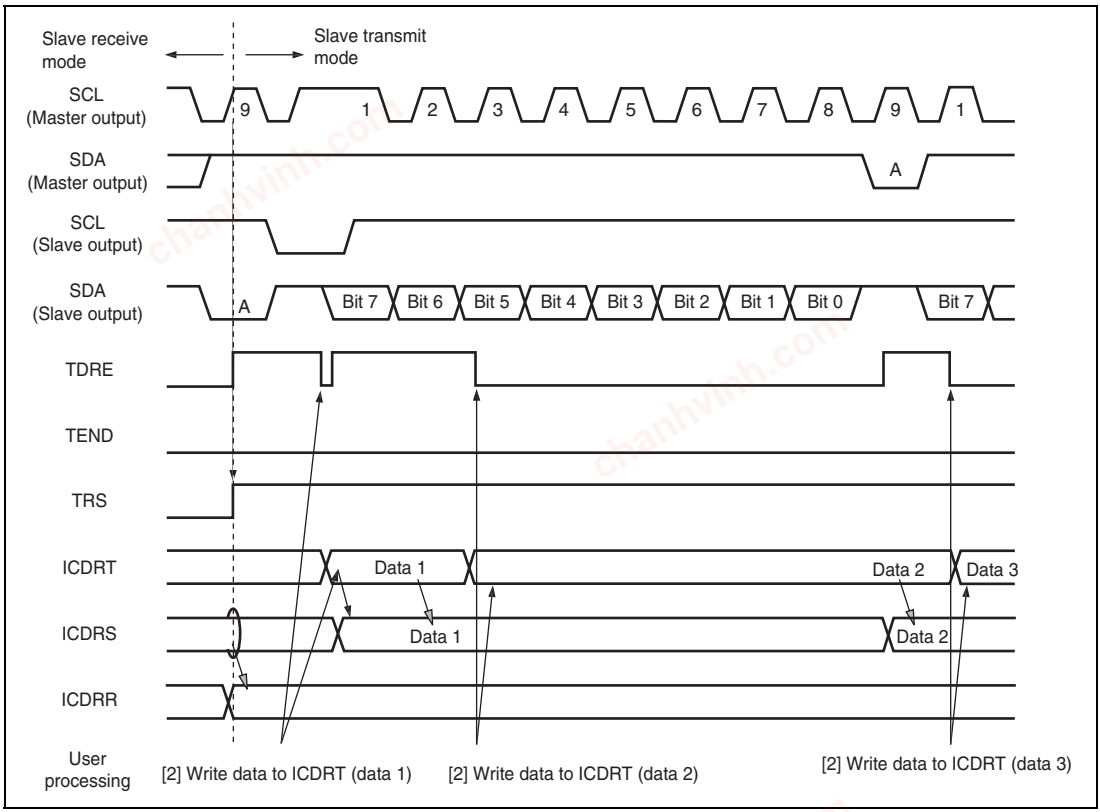

Figure 20.9 Slave Transmit Mode Operation Timing (1)

chanhvinh.com

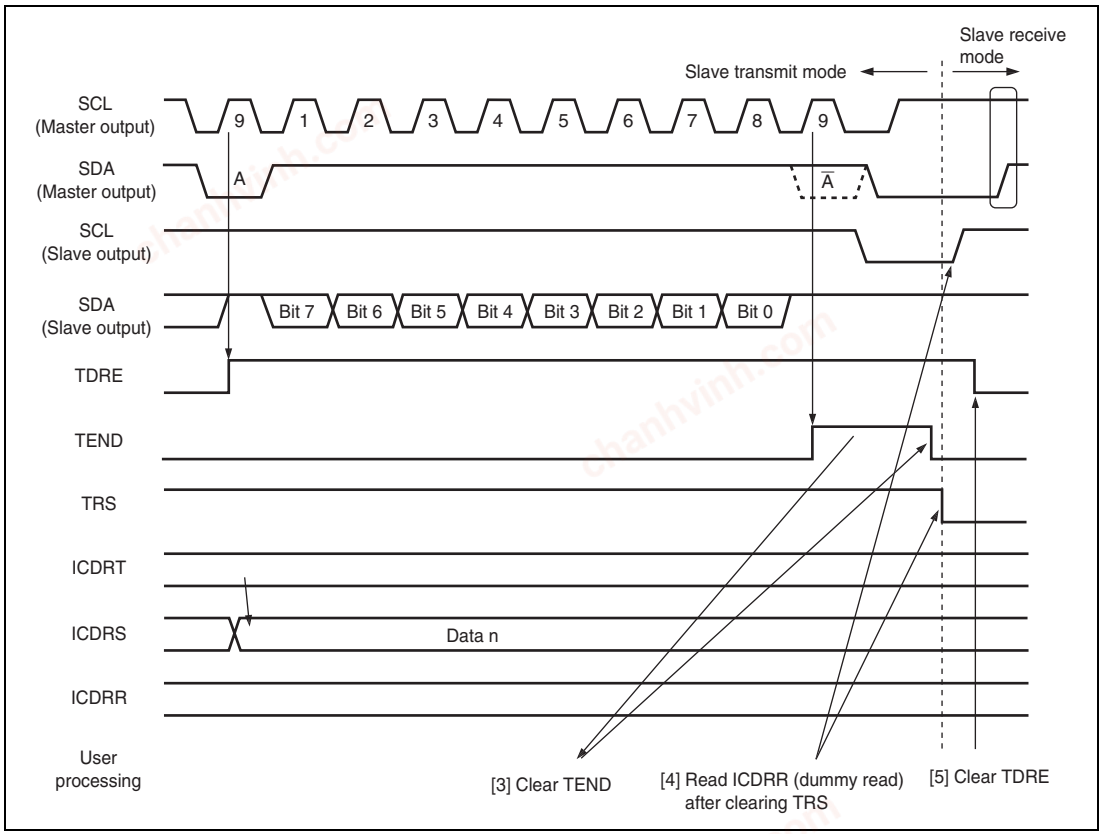

Figure 20.10 Slave Transmit Mode Operation Timing (2)

chanhvinh.com

20.4.5 Slave Receive Operation

In slave receive mode, the master device outputs the transmit clock and transmit data, and the slave device returns an acknowledge signal. For slave receive mode operation timing, refer to figures 20.11 and 20.12. The reception procedure and operations in slave receive mode are described below.

1. Set the ICE bit in ICCR1 to 1. Set bits CKS[3:0] in ICCR1. (Initial setting) Set the MST and TRS bits in ICCR1 to select slave receive mode, and wait until the slave address matches.
2. When the slave address matches in the first frame following detection of the start condition, the slave device outputs the level specified by ACKBT in ICIER to SDA, at the rise of the 9th clock pulse. At the same time, RDRF in ICSR is set to read ICDRR (dummy read). (Since the read data show the slave address and R/W, it is not used.)
3. Read ICDRR every time RDRF is set. If 8th receive clock pulse falls while RDRF is 1, SCL is fixed low until ICDRR is read. The change of the acknowledge before reading ICDRR, to be returned to the master device, is reflected to the next transmit frame.
4. The last byte data is read by reading ICDRR.

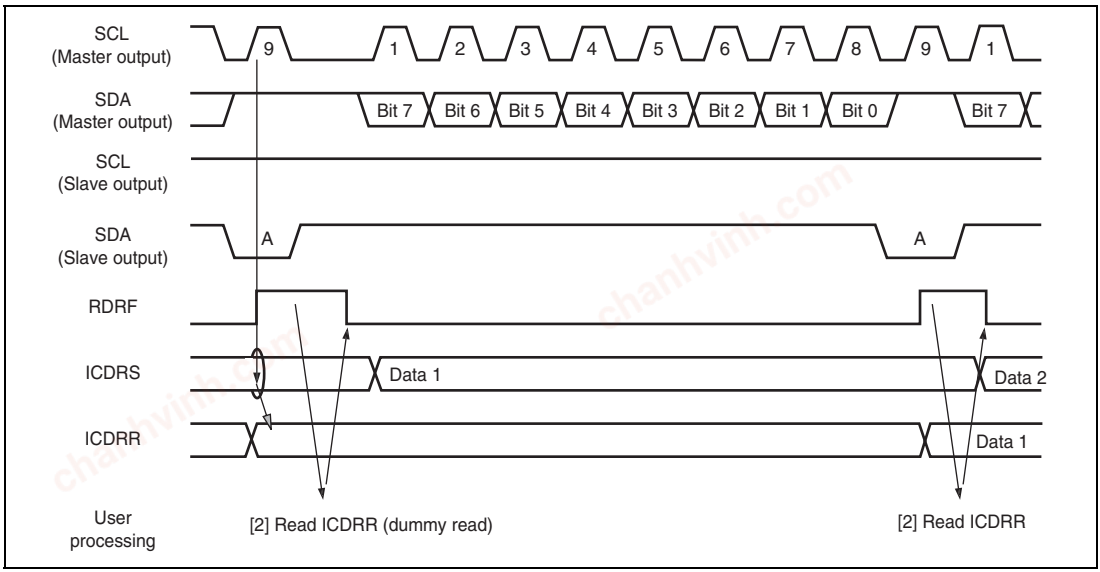

Figure 20.11 Slave Receive Mode Operation Timing (1)

chanhvinh.com

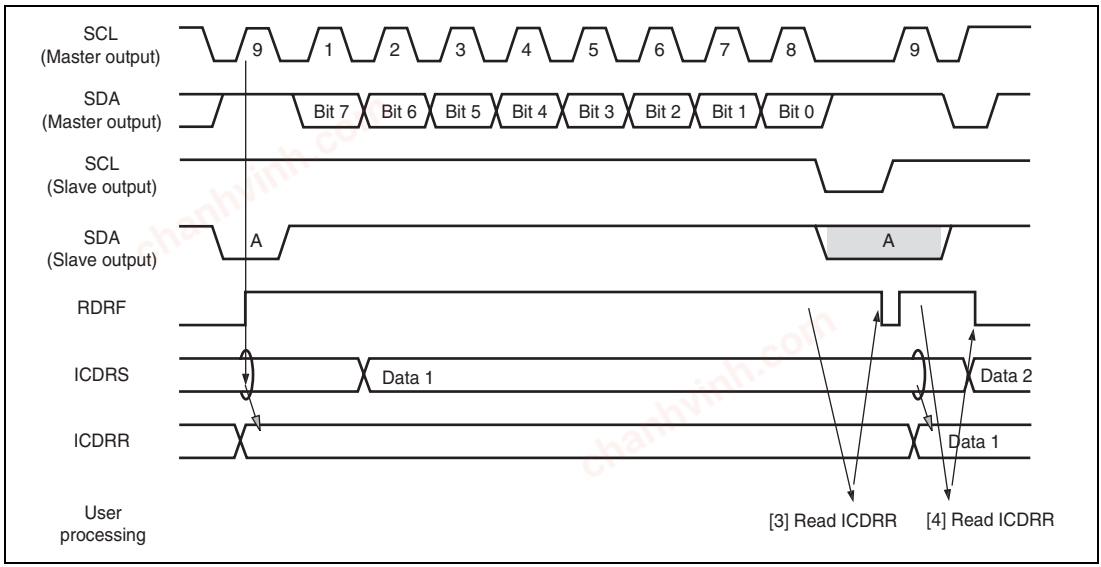

Figure 20.12 Slave Receive Mode Operation Timing (2)

20.4.6 Clocked Synchronous Serial Format

This module can be operated with the clocked synchronous serial format, by setting the FS bit in SAR to 1. When the MST bit in ICCR1 is 1, the transfer clock output from SCL is selected. When MST is 0, the external clock input is selected.

(1) Data Transfer Format

Figure 20.13 shows the clocked synchronous serial transfer format.

The transfer data is output from the fall to the fall of the SCL clock, and the data at the rising edge of the SCL clock is guaranteed. The MLS bit in ICMR sets the order of data transfer, in either the MSB first or LSB first. The output level of SDA can be changed during the transfer wait, by the SDAO bit in ICCR2.

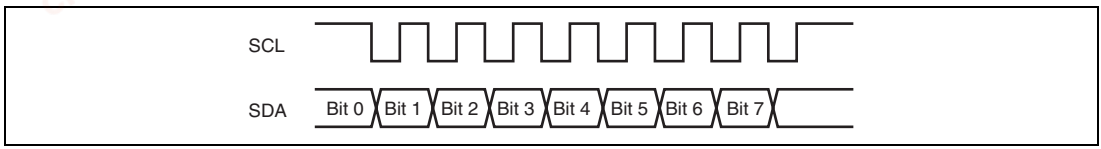

Figure 20.13 Clocked Synchronous Serial Transfer Format

chanhvinh.com

(2) Transmit Operation

In transmit mode, transmit data is output from SDA, in synchronization with the fall of the transfer clock. The transfer clock is output when MST in ICCR1 is 1, and is input when MST is 0. For transmit mode operation timing, refer to figure 20.14. The transmission procedure and operations in transmit mode are described below.

1. Set the ICE bit in ICCR1 to 1. Set the MST and CKS[3:0] bits in ICCR1. (Initial setting)
2. Set the TRS bit in ICCR1 to select the transmit mode. Then, TDRE in ICSR is set.
3. Confirm that TDRE has been set. Then, write the transmit data to ICDRT. The data is transferred from ICDRT to ICDRS, and TDRE is set automatically. The continuous transmission is performed by writing data to ICDRT every time TDRE is set. When changing from transmit mode to receive mode, clear TRS while TDRE is 1.

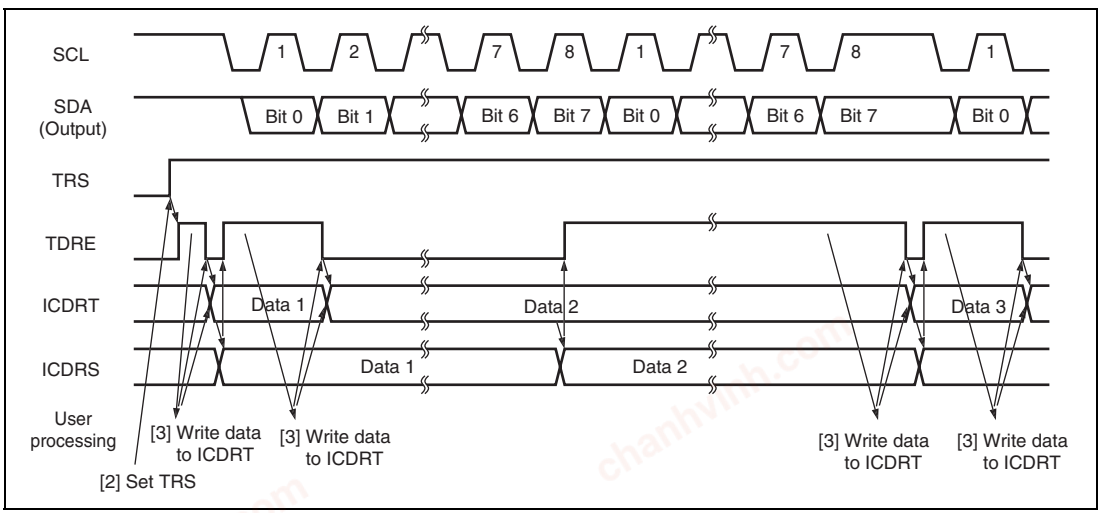

Figure 20.14 Transmit Mode Operation Timing

chanhvinh.com

(3) Receive Operation

In receive mode, data is latched at the rise of the transfer clock. The transfer clock is output when MST in ICCR1 is 1, and is input when MST is 0. For receive mode operation timing, refer to Figure 20.15. The reception procedure and operations in receive mode are described below.

1. Set the ICE bit in ICCR1 to 1. Set bits CKS[3:0] in ICCR1. (Initial setting)
2. When the transfer clock is output, set MST to 1 to start outputting the receive clock.
3. When the receive operation is completed, data is transferred from ICDRS to ICDRR and RDRF in ICSR is set. When MST = 1, the next byte can be received, so the clock is continually output. The continuous reception is performed by reading ICDRR every time RDRF is set. When the 8th clock is risen while RDRF is 1, the overrun is detected and AL/OVE in ICSR is set. At this time, the previous reception data is retained in ICDRR.
4. To stop receiving when MST = 1, set RCVD in ICCR1 to 1, then read ICDRR. Then, SCL is fixed high after receiving the next byte data.

Notes: Follow the steps below to receive only one byte with MST = 1 specified. See figure 20.16 for the operation timing.

1. Set the ICE bit in ICCR1 to 1. Set bits CKS[3:0] in ICCR1. (Initial setting)
2. Set MST = 1 while the RCVD bit in ICCR1 is 0. This causes the receive clock to be output.
3. Check if the BC2 bit in ICMR is set to 1 and then set the RCVD bit in ICCR1 to 1. This causes the SCL to be fixed to the high level after outputting one byte of the receive clock.

chanhvinh.com

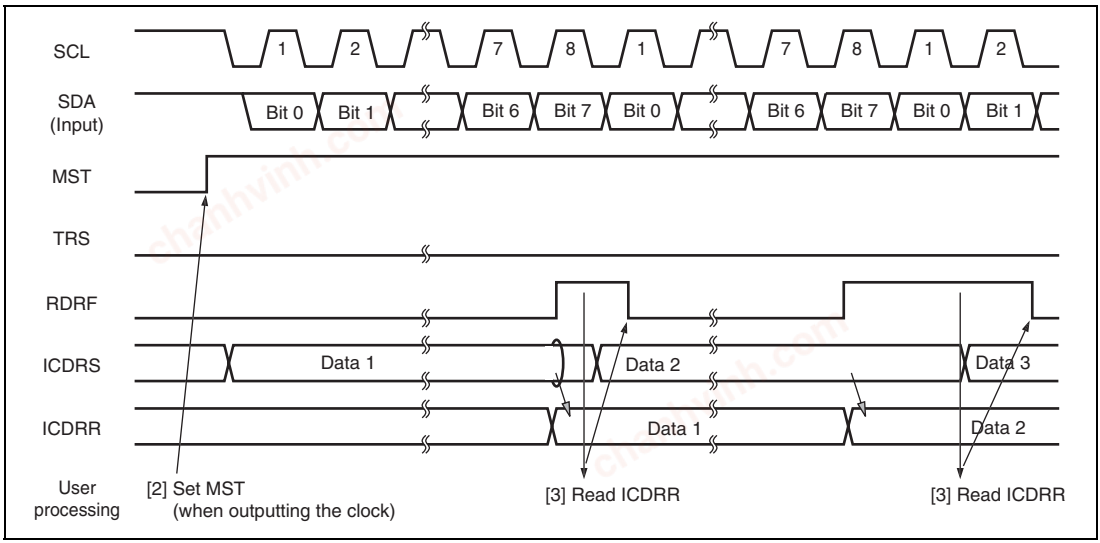

Figure 20.15 Receive Mode Operation Timing

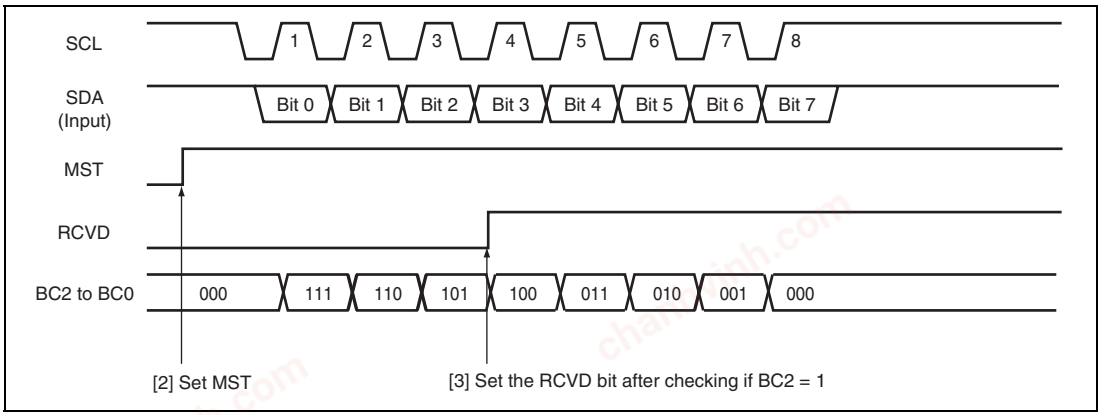

Figure 20.16 Operation Timing for Receiving One Byte (MST = 1)

chanhvinh.com

20.4.7 Noise Filter

The logic levels at the SCL and SDA pins are routed through noise filters before being latched internally. Figure 20.17 shows a block diagram of the noise filter circuit.

The noise filter consists of three cascaded latches and a match detector. The SCL (or SDA) input signal is sampled on the peripheral clock. When NF2CYC is set to 0, this signal is not passed forward to the next circuit unless the outputs of both latches agree. When NF2CYC is set to 1, this signal is not passed forward to the next circuit unless the outputs of three latches agree. If they do not agree, the previous value is held.

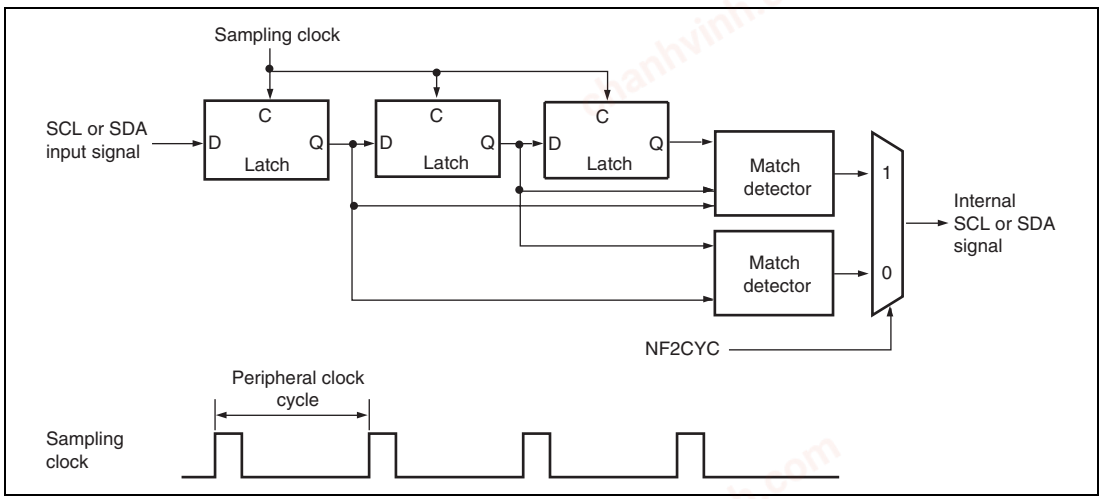

Figure 20.17 Block Diagram of Noise Filter

chanhvinh.com

20.4.8 Example of Use

Flowcharts in respective modes that use the I²C bus interface 3 are shown in figures 20.18 to 20.21.

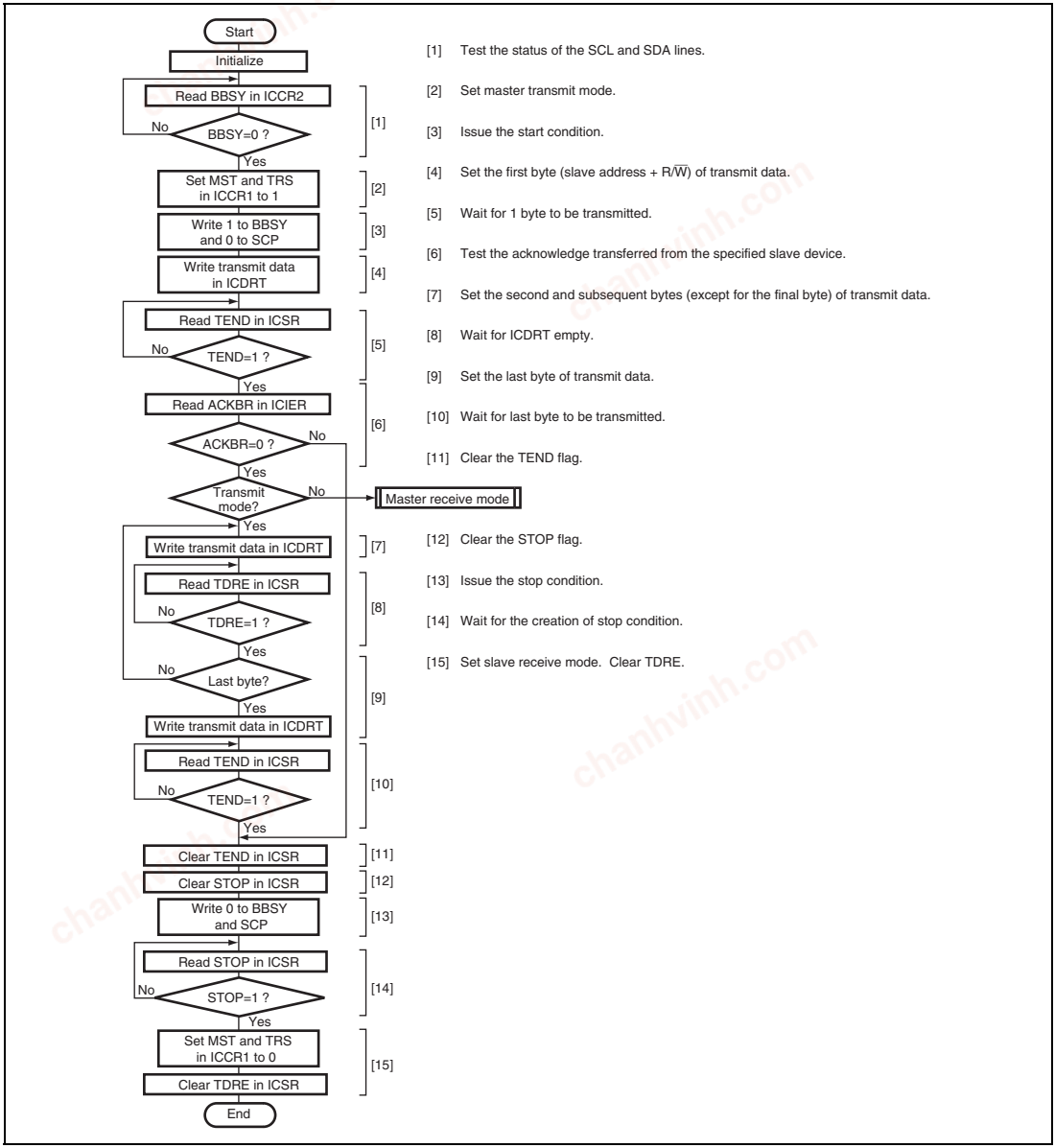

Figure 20.18 Sample Flowchart for Master Transmit Mode

chanhvinh.com

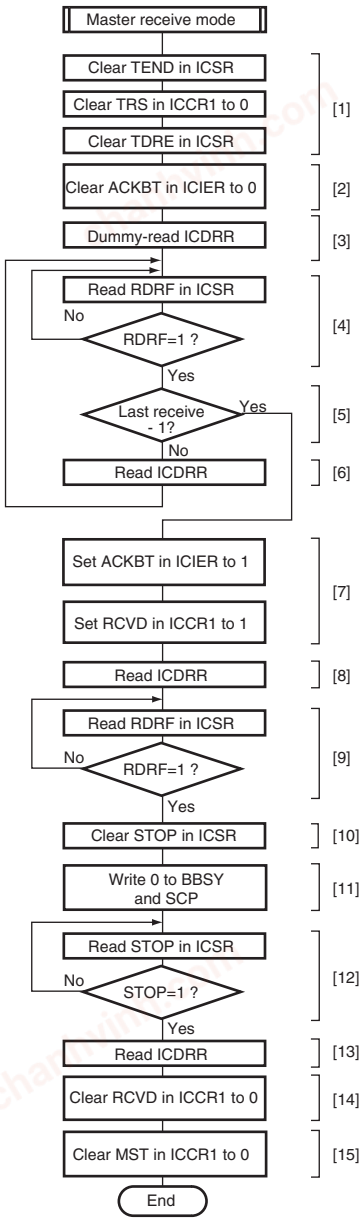

[1] Clear TEND, select master receive mode, and then clear TDRE. *1

[2] Set acknowledge to the transmit device. *1

[3] Dummy-read ICDDR. *1

[4] Wait for 1 byte to be received*2

[5] Check whether it is the (last receive - 1).*2

[6] Read the receive data.

[7] Set acknowledge of the final byte. Disable continuous reception (RCVD = 1).*2

[8] Read the (final byte - 1) of received data.

[9] Wait for the last byte to be receive.

[10] Clear the STOP flag.

[11] Issue the stop condition.

[12] Wait for the creation of stop condition.

[13] Read the last byte of receive data.

[14] Clear RCVD.

[15] Set slave receive mode.

Notes: 1. Make sure that no interrupt will be generated during steps [1] to [3].
2. When the (last receive -1) is checked (when step [5] is approved), make sure that no interrupt will be generated during steps [4], [5], and [7].

[Complement] When the size of receive data is only one byte in reception, steps [2] to [6] are skipped after step [1], before jumping to step [7]. The step [8] is dummy-read in ICDRR.

Figure 20.19 Sample Flowchart for Master Receive Mode

chanhvinh.com

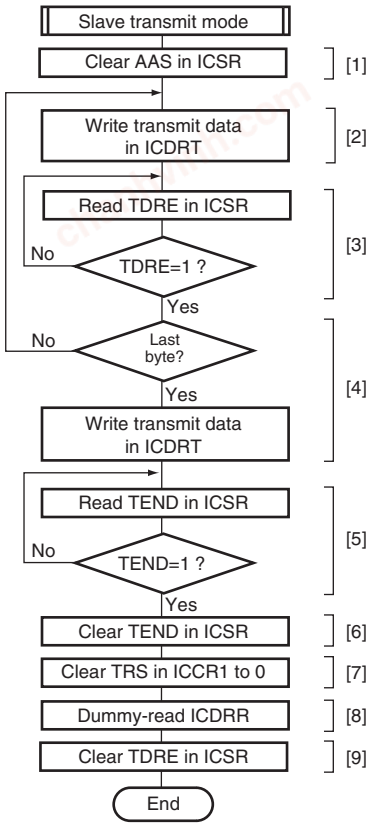

[1] Clear the AAS flag.

[2] Set transmit data for ICDRT (except for the last byte).

[3] Wait for ICDRT empty.

[4] Set the last byte of transmit data.

[5] Wait for the last byte to be transmitted.

[6] Clear the TEND flag.

[7] Set slave receive mode.

[8] Dummy-read ICDRR to release the SCL.

[9] Clear the TDRE flag.

Figure 20.20 Sample Flowchart for Slave Transmit Mode

chanhvinh.com

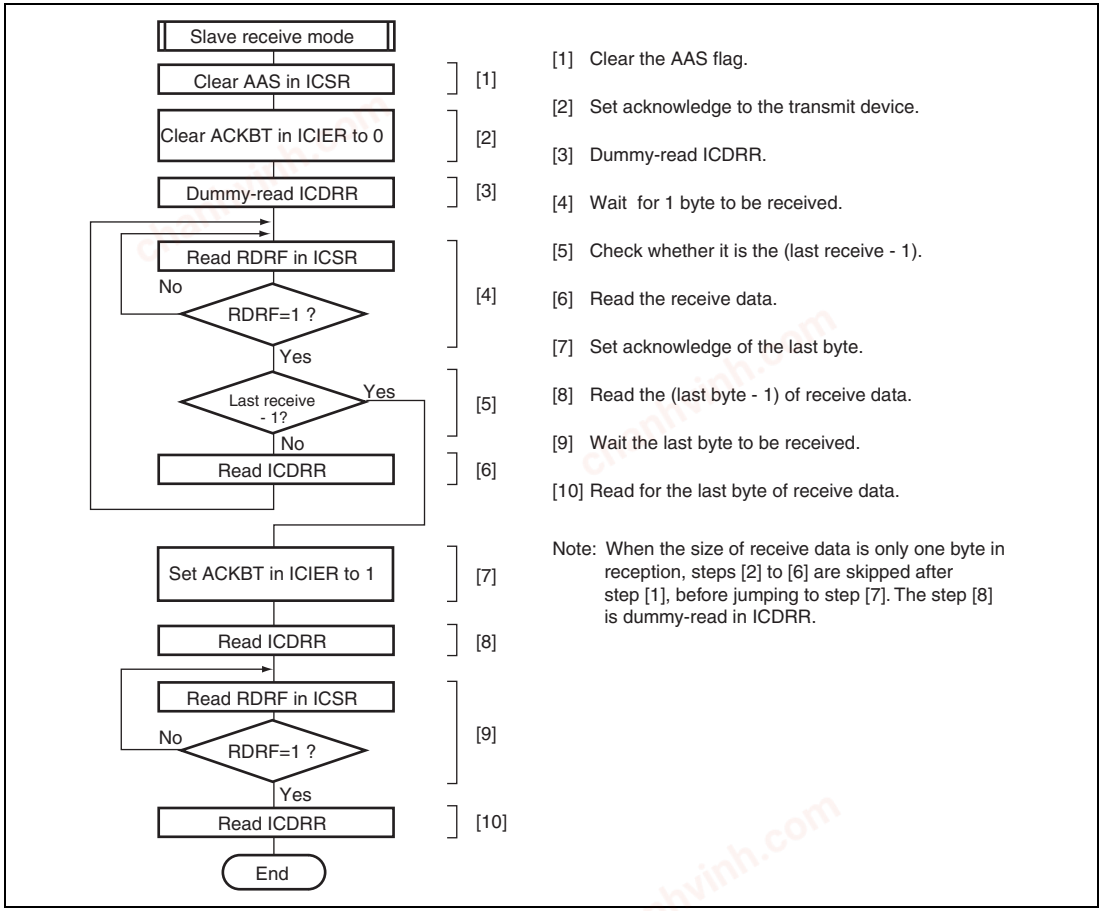

Figure 20.21 Sample Flowchart for Slave Receive Mode

chanhvinh.com

20.5 Interrupt Requests

There are six interrupt requests in this module; transmit data empty, transmit end, receive data full, NACK detection, STOP recognition, and arbitration lost/overrun error. Table 20.4 shows the contents of each interrupt request.

Table 20.4 Interrupt Requests

Interrupt Request	Abbreviation	Interrupt Condition	I²C Bus Format	Clocked Synchronous Serial Format
Transmit data Empty	TXI	(TDRE = 1) • (TIE = 1)	√	√
Transmit end	TEI	(TEND = 1) • (TEIE = 1)	√	√
Receive data full	RXI	(RDRF = 1) • (RIE = 1)	√	√
STOP recognition	STPI	(STOP = 1) • (STIE = 1)	√	—
NACK detection	NAKI	{(NACKF = 1) + (AL = 1)} • (NAKIE = 1)	√	—
Arbitration lost/ overrun error			√	√

When the interrupt condition described in table 20.4 is 1, the CPU executes an interrupt exception handling. Note that a TXI or RXI interrupt can activate the direct memory access controller if the setting for direct memory access controller activation has been made. In such a case, an interrupt request is not sent to the CPU. Interrupt sources should be cleared in the exception handling. The TDRE and TEND bits are automatically cleared to 0 by writing the transmit data to ICDRT. The RDRF bit is automatically cleared to 0 by reading ICDRR. The TDRE bit is set to 1 again at the same time when the transmit data is written to ICDRT. Therefore, when the TDRE bit is cleared to 0, then an excessive data of one byte may be transmitted.

chanhvinh.com

20.6 Bit Synchronous Circuit

In master mode, this module has a possibility that high level period may be short in the two states described below.

- When SCL is driven to low by the slave device
- When the rising speed of SCL is lowered by the load of the SCL line (load capacitance or pull-up resistance)

Therefore, it monitors SCL and communicates by bit with synchronization.

Figure 20.22 shows the timing of the bit synchronous circuit and table 20.5 shows the time when the SCL output changes from low to Hi-Z then SCL is monitored.

chanhvinh.com

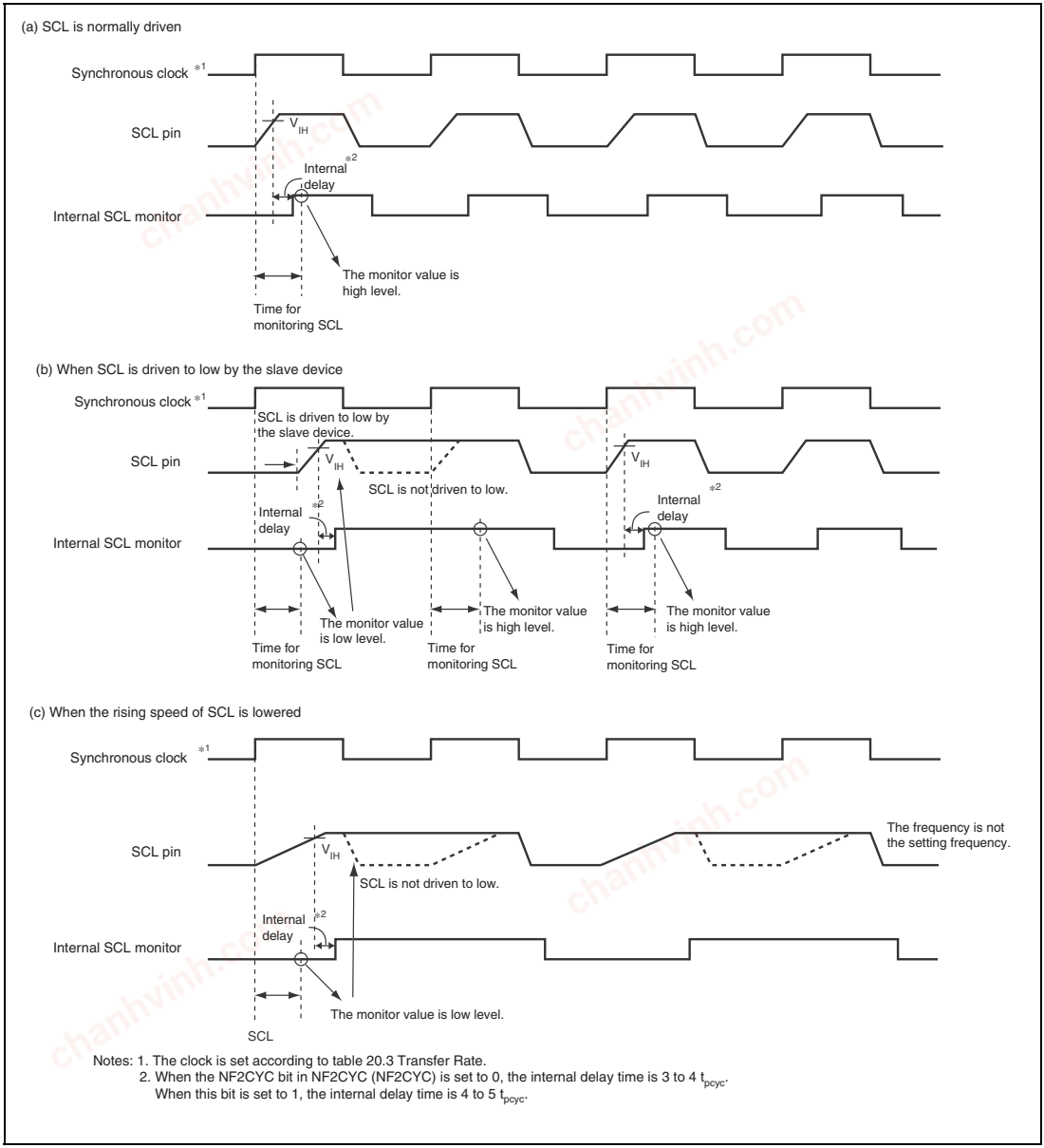

Notes: 1. The clock is set according to table 20.3 Transfer Rate.
2. When the NF2CYC bit in NF2CYC (NF2CYC) is set to 0, the internal delay time is 3 to 4 t_{pcyc}.
When this bit is set to 1, the internal delay time is 4 to 5 t_{pcyc}.

Figure 20.22 Bit Synchronous Circuit Timing

chanhvinh.com

Table 20.5 Time for Monitoring SCL

CKS4	CKS3	CKS2	Time for Monitoring SCL
0	0	0	9 tpcyc*
		1	21 tpcyc*
	1	0	39 tpcyc*
		1	87 tpcyc*
1	0	0	79 tpcyc*
		1	175 tpcyc*
	1	0	159 tpcyc*
		1	351 tpcyc*

Note: * tpcyc indicates the frequency of the peripheral clock 0 (P0ϕ).

20.7 Usage Notes

20.7.1 Note on Setting for Multi-Master Operation

In multi-master operation, when the transfer rate setting for this module (ICCR1.CKS[3:0]) makes this LSI slower than the other masters, pulse cycles with an unexpected length will infrequently be output on SCL.

Be sure to specify a transfer rate that is at least 1/1.8 of the fastest transfer rate among the other masters.

20.7.2 Note on Master Receive Mode

Reading ICDRR around the falling edge of the 8th clock might fail to fetch the receive data.

In addition, when RCVD is set to 1 around the falling edge of the 8th clock and the receive buffer full, a stop condition may not be issued.

Use either 1 or 2 below as a measure against the situations above.

1. In master receive mode, read ICDRR before the rising edge of the 8th clock.
2. In master receive mode, set the RCVD bit to 1 so that transfer proceeds in byte units.

chanhvinh.com

20.7.3 Note on Setting ACKBT in Master Receive Mode

In master receive mode operation, set ACKBT before the falling edge of the 8th SCL cycle of the last data being continuously transferred. Not doing so can lead to an overrun for the slave transmission device.

20.7.4 Note on the States of Bits MST and TRN when Arbitration is Lost

When sequential bit-manipulation instructions are used to set the MST and TRS bits to select master transmission in multi-master operation, a conflicting situation where AL in ICSR = 1 but the mode is master transmit mode (MST = 1 and TRS = 1) may arise; this depends on the timing of the loss of arbitration when the bit manipulation instruction for TRS is executed.

This can be avoided in either of the following ways.

- In multi-master operation, use the MOV instruction to set the MST and TRS bits.
- When arbitration is lost, check whether the MST and TRS bits are 0. If the MST and TRS bits have been set to a value other than 0, clear the bits to 0.

20.7.5 Note on I²C-Bus Interface Master Receive Mode

After a master receive operation is completed, confirm the falling edge of the ninth clock cycle of the SCL signal and generate a stop condition or regenerate a start condition.

20.7.6 Note on IICRST and BBSY bits

When 1 is written to IICRST in ICCR2, this LSI release SCL and SDA pins. Then, if the SDA level changes from low to high under the condition of SCL = high, BBSY in ICCR2 is cleared to 0 assuming that the stop condition has been issued.

20.7.7 Note on Issuance of Stop Conditions in Master Transmit Mode while ACKE = 1

When a stop condition is issued in master transmit mode while the ACKE bit in the I²C bus interrupt enable register (ICIER) is 1, the stop condition may not be normally output depending on the issued timing. To avoid this, recognize the falling edge of the ninth clock before issuance of the stop condition.

The falling edge of the ninth clock can be recognized by checking the SCLO bit in the I²C control register 2 (ICCR2).

chanhvinh.com

Section 21 Serial Sound Interface

The serial sound interface is a module designed to send or receive audio data interface with various devices offering I^2S bus compatibility. It also provides additional modes for other common formats, as well as support for multi-channel mode.

21.1 Features

- Number of channels: Six channels
- Operating mode: Non-compressed mode
  The non-compressed mode supports serial audio streams divided by channels.
- Serves as both a transmitter and a receiver
  Channel 0 supports full-duplex communications.
- Capable of using serial bus format
- Asynchronous transfer takes place between the data buffer and the shift register.
- It is possible to select a value as the dividing ratio for the clock used by the serial bus interface.
- It is possible to control data transmission or reception with DMA transfer and interrupt requests.
- Selects the oversampling clock input from among the following pins:
  AUDIO_CLK (1 to 50 MHz)
  AUDIO_X1, AUDIO_X2 (when connecting a crystal resonator: 10 to 50 MHz, when used to input external clock: 1 to 50 MHz)
- Includes 8-stage FIFO buffers in transmitter and receiver
- Supports multi-channel mode (TDM mode) in which the SSIWS signal is high only for system word 1 period.
- Supports WS continue mode in which the SSIWS signal is not stopped.

chanhvinh.com

Figure 21.1 shows a block diagram of this module.

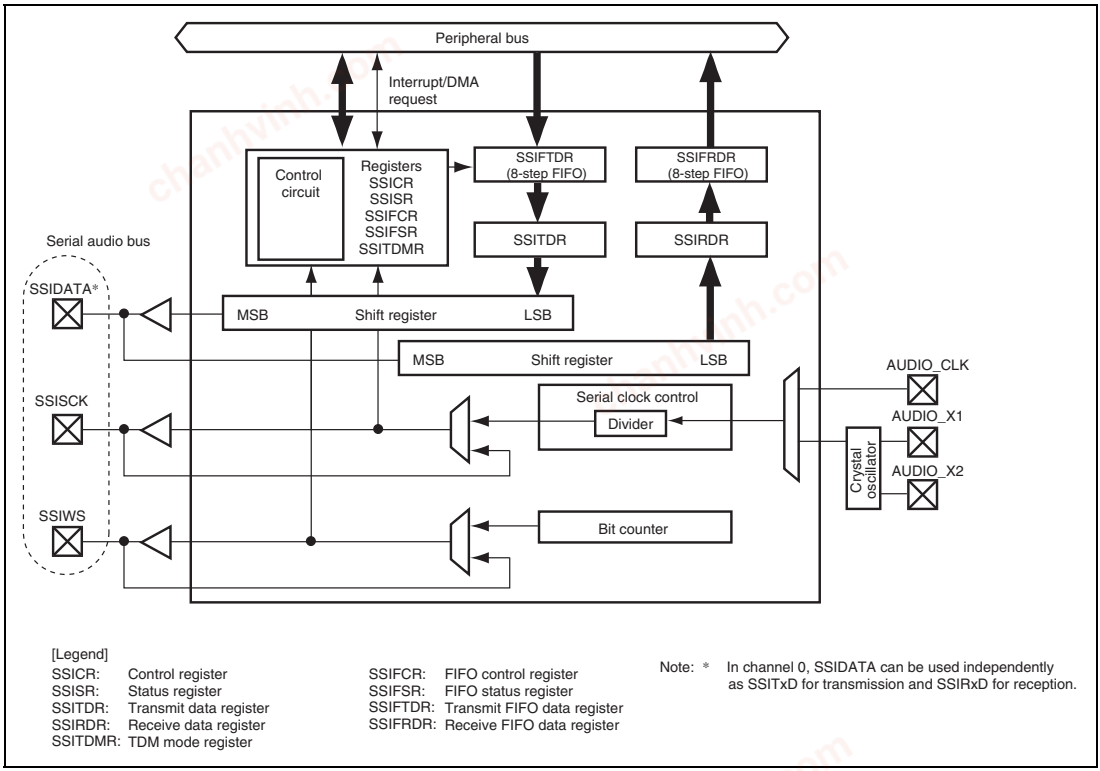

Figure 21.1 Block Diagram of Serial Sound Interface

chanhvinh.com

21.2 Input/Output Pins

Table 21.1 shows the pin assignments relating to this module.

Table 21.1 Pin Assignments

Channel	Pin Name	I/O	Description
0	SSISCK0*	I/O	Serial bit clock
	SSIWS0*	I/O	Word selection
	SSITxD0	Output	Serial data output
	SSIRxD0*	Input	Serial data input
1 to 5	SSISCK1 to SSISCK5*	I/O	Serial bit clock
	SSIWS1 to SSIWS5*	I/O	Word selection
	SSIDATA1 to SSIDATA5*	I/O	Serial data input/output
Common	AUDIO_CLK	Input	External clock for audio (input oversampling clock)
	AUDIO_X1	Input	Crystal resonator/external clock for audio (input oversampling clock)
	AUDIO_X2	Output	

Note: * It is possible to select whether or not to use the noise canceler function in the input path when in slave mode. For details, see 48.2.34, Serial Sound Interface Noise Canceler Control Register (SNCR).

chanhvinh.com

21.3 Register Description

Table 21.2 lists the register configuration. Note that explanation in the text does not refer to the channels.

Table 21.2 Register Configuration

Channel	Register Name	Abbreviation	R/W	Initial Value	Address	Access Size
0	Control register 0	SSICR_0	R/W	H'00000000	H'FFFF0000	8, 16, 32
	Status register 0	SSISR_0	R/W*1	H'02000013	H'FFFF0004	8, 16, 32
	FIFO control register 0	SSIFCR_0	R/W	H'00000000	H'FFFF0010	8, 16, 32
	FIFO status register 0	SSIFSR_0	R/(W)*2	H'00010000	H'FFFF0014	8, 16, 32
	Transmit FIFO data register 0	SSIFTDR_0	W	Undefined	H'FFFF0018	32
	Receive FIFO data register 0	SSIFRDR_0	R	Undefined	H'FFFF001C	32
	TDM mode register 0	SSITDMR_0	R/W	H'00000000	H'FFFF0020	8, 16, 32
1	Control register 1	SSICR_1	R/W	H'00000000	H'FFFF0800	8, 16, 32
	Status register 1	SSISR_1	R/W*1	H'02000013	H'FFFF0804	8, 16, 32
	FIFO control register 1	SSIFCR_1	R/W	H'00000000	H'FFFF0810	8, 16, 32
	FIFO status register 1	SSIFSR_1	R/(W)*2	H'00010000	H'FFFF0814	8, 16, 32
	Transmit FIFO data register 1	SSIFTDR_1	W	Undefined	H'FFFF0818	32
	Receive FIFO data register 1	SSIFRDR_1	R	Undefined	H'FFFF081C	32
	TDM mode register 1	SSITDMR_1	R/W	H'00000000	H'FFFF0820	8, 16, 32

chanhvinh.com

Channel	Register Name	Abbreviation	R/W	Initial Value	Address	Access Size
2	Control register 2	SSICR_2	R/W	H'00000000	H'FFFF1000	8, 16, 32
	Status register 2	SSISR_2	R/W*1	H'02000013	H'FFFF1004	8, 16, 32
	FIFO control register 2	SSIFCR_2	R/W	H'00000000	H'FFFF1010	8, 16, 32
	FIFO status register 2	SSIFSR_2	R/(W)*2	H'00010000	H'FFFF1014	8, 16, 32
	Transmit FIFO data register 2	SSIFTDR_2	W	Undefined	H'FFFF1018	32
	Receive FIFO data register 2	SSIFRDR_2	R	Undefined	H'FFFF101C	32
	TDM mode register 2	SSITDMR_2	R/W	H'00000000	H'FFFF1020	8, 16, 32
3	Control register 3	SSICR_3	R/W	H'00000000	H'FFFF1800	8, 16, 32
	Status register 3	SSISR_3	R/W*1	H'02000013	H'FFFF1804	8, 16, 32
	FIFO control register 3	SSIFCR_3	R/W	H'00000000	H'FFFF1810	8, 16, 32
	FIFO status register 3	SSIFSR_3	R/(W)*2	H'00010000	H'FFFF1814	8, 16, 32
	Transmit FIFO data register 3	SSIFTDR_3	W	Undefined	H'FFFF1818	32
	Receive FIFO data register 3	SSIFRDR_3	R	Undefined	H'FFFF181C	32
	TDM mode register 3	SSITDMR_3	R/W	H'00000000	H'FFFF1820	8, 16, 32

chanhvinh.com

Channel	Register Name	Abbreviation	R/W	Initial Value	Address	Access Size
4	Control register 4	SSICR_4	R/W	H'00000000	H'FFFF2000	8, 16, 32
	Status register 4	SSISR_4	R/W*1	H'02000013	H'FFFF2004	8, 16, 32
	FIFO control register 4	SSIFCR_4	R/W	H'00000000	H'FFFF2010	8, 16, 32
	FIFO status register 4	SSIFSR_4	R/(W)*2	H'00010000	H'FFFF2014	8, 16, 32
	Transmit FIFO data register 4	SSIFTDR_4	W	Undefined	H'FFFF2018	32
	Receive FIFO data register 4	SSIFRDR_4	R	Undefined	H'FFFF201C	32
	TDM mode register 4	SSITDMR_4	R/W	H'00000000	H'FFFF2020	8, 16, 32
5	Control register 5	SSICR_5	R/W	H'00000000	H'FFFF2800	8, 16, 32
	Status register 5	SSISR_5	R/W*1	H'02000013	H'FFFF2804	8, 16, 32
	FIFO control register 5	SSIFCR_5	R/W	H'00000000	H'FFFF2810	8, 16, 32
	FIFO status register 5	SSIFSR_5	R/(W)*2	H'00010000	H'FFFF2814	8, 16, 32
	Transmit FIFO data register 5	SSIFTDR_5	W	Undefined	H'FFFF2818	32
	Receive FIFO data register 5	SSIFRDR_5	R	Undefined	H'FFFF281C	32
	TDM mode register 5	SSITDMR_5	R/W	H'00000000	H'FFFF2820	8, 16, 32

Notes: 1. Although bits 29 to 26 in these registers can be read from or written to, bits other than these are read-only. For details, refer to section 21.3.2, Status Register (SSISR).

2. To bits 16 and 0 in these registers, only 0 can be written to clear the flags. Other bits are read-only. For details, refer to section 21.3.6, FIFO Status Register (SSIFSR).

chanhvinh.com

21.3.1 Control Register (SSICR)

SSICR is a readable/writable 32-bit register that controls the IRQ, selects the polarity status, and sets operating mode.

Bit:	31	30	29	28	27	26	25	24	23	22	21	20	19	18	17	16
	-	CKS	TUIEN	TOIEN	RUIEN	ROIEN	IIEN	-	CHNL[1:0]		DWL[2:0]			SWL[2:0]		
Initial value:	0	0	0	0	0	0	0	0	0	0	0	0	0	0	0	0
R/W:	R	R/W	R/W	R/W	R/W	R/W	R/W	R	R/W	R/W	R/W	R/W	R/W	R/W	R/W	R/W

Bit:	15	14	13	12	11	10	9	8	7	6	5	4	3	2	1	0
	SCKD	SWSD	SCKP	SWSP	SPDP	SDTA	PDTA	DEL	CKDV[3:0]				MUEN	-	TEN	REN
Initial value:	0	0	0	0	0	0	0	0	0	0	0	0	0	0	0	0
R/W:	R/W	R/W	R/W	R/W	R/W	R/W	R/W	R/W	R/W	R/W	R/W	R/W	R/W	R	R/W	R/W

Bit	Bit Name	Initial Value	R/W	Description
31	—	0	R	Reserved The read value is undefined. The write value should always be 0.
30	CKS	0	R/W	Oversampling Clock Select Selects the clock source for oversampling. 0: AUDIO_X1 input 1: AUDIO_CLK input
29	TUIEN	0	R/W	Transmit Underflow Interrupt Enable 0: Disables an underflow interrupt. 1: Enables an underflow interrupt.
28	TOIEN	0	R/W	Transmit Overflow Interrupt Enable 0: Disables an overflow interrupt. 1: Enables an overflow interrupt.
27	RUIEN	0	R/W	Receive Underflow Interrupt Enable 0: Disables an underflow interrupt. 1: Enables an underflow interrupt.
26	ROIEN	0	R/W	Receive Overflow Interrupt Enable 0: Disables an overflow interrupt. 1: Enables an overflow interrupt.

chanhvinh.com

Bit	Bit Name	Initial Value	R/W	Description
25	IIEN	0	R/W	Idle Mode Interrupt Enable 0: Disables an idle mode interrupt. 1: Enables an idle mode interrupt.
24	—	0	R	Reserved The read value is undefined. The write value should always be 0.
23, 22	CHNL[1:0]	00	R/W	Channels [When TDM = 0] These bits show the number of channels in each system word. 00: Having one channel per system word 01: Having two channels per system word 10: Having three channels per system word 11: Having four channels per system word [When TDM = 1] These bits show the number of system words in each TDM frame. 00: Setting prohibited 01: Having four system words per TDM frame 10: Having six system words per TDM frame 11: Having eight system words per TDM frame

chanhvinh.com

Bit	Bit Name	Initial Value	R/W	Description
21 to 19	DWL[2:0]	000	R/W	Data Word Length These bits indicate the number of bits in a data word. 000: 8 bits 001: 16 bits 010: 18 bits 011: 20 bits 100: 22 bits 101: 24 bits 110: 32 bits 111: Setting prohibited
18 to 16	SWL[2:0]	000	R/W	System Word Length These bits indicate the number of bits in a system word. 000: 8 bits 001: 16 bits 010: 24 bits 011: 32 bits 100: 48 bits 101: 64 bits 110: 128 bits 111: 256 bits
15	SCKD	0	R/W	Serial Bit Clock Direction 0: Serial bit clock is input, slave mode. 1: Serial bit clock is output, master mode. Note: Only the following settings are allowed: (SCKD, SWSD) = (0, 0) and (1, 1). Other settings are prohibited.
14	SWSD	0	R/W	Serial WS Direction 0: Serial word select is input, slave mode. 1: Serial word select is output, master mode. Note: Only the following settings are allowed: (SCKD, SWSD) = (0,0) and (1,1). Other settings are prohibited.

chanhvinh.com

Bit	Bit Name	Initial Value	R/W	Description
13	SCKP	0	R/W	Serial Bit Clock Polarity 0: SSIWS and SSIDATA change at the SSISCK falling edge (sampled at the SCK rising edge). 1: SSIWS and SSIDATA change at the SSISCK rising edge (sampled at the SCK falling edge).

	SCKP =0	SCKP = 1
SSIDATA input sampling timing at the time of reception	SSISCK rising edge	SSISCK falling edge
SSIDATA output change timing at the time of transmission	SSISCK falling edge	SSISCK rising edge
SSIWS input sampling timing at the time of slave mode (SWSD = 0)	SSISCK rising edge	SSISCK falling edge
SSIWS output change timing at the time of master mode (SWSD = 1)	SSISCK falling edge	SSISCK rising edge

12	SWSP	0	R/W	Serial WS Polarity [When TDM = 0] 0: SSIWS is low for 1st channel, high for 2nd channel. 1: SSIWS is high for 1st channel, low for 2nd channel. [When TDM = 1] 0: SSIWS is high only for system word 1 period, low for other periods. 1: Setting prohibited
11	SPDP	0	R/W	Serial Padding Polarity 0: Padding bits are low. 1: Padding bits are high.

chanhvinh.com

Bit	Bit Name	Initial Value	R/W	Description
10	SDTA	0	R/W	Serial Data Alignment 0: Transmitting and receiving in the order of serial data and padding bits 1: Transmitting and receiving in the order of padding bits and serial data
9	PDTA	0	R/W	Parallel Data Alignment When the data word length is 32 bits, this configuration field has no meaning. This bit applies to SSIRDR in receive mode and SSITDR in transmit mode. When data word length is 8 or 16 bits: 0: The lower bits of parallel data (SSITDR, SSIRDR) are transferred prior to the upper bits. 1: The upper bits of parallel data (SSITDR, SSIRDR) are transferred prior to the lower bits. When data word length is 18, 20, 22, or 24 bits: 0: Parallel data (SSITDR, SSIRDR) is left-aligned. 1: Parallel data (SSITDR, SSIRDR) is right-aligned. • PDTA = 0

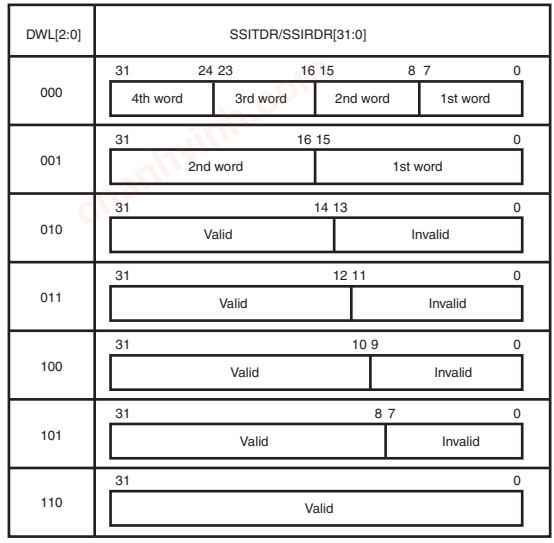

chanhvinh.com

Bit	Bit Name	Initial Value	R/W	Description
9	PDTA	0	R/W	• PDTA = 1
8	DEL	0	R/W	Serial Data Delay 0: 1 clock cycle delay between SSIWS and SSIDATA 1: No delay between SSIWS and SSIDATA

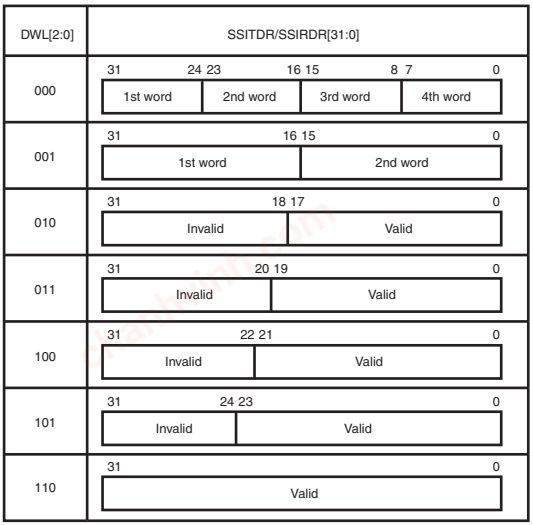

chanhvinh.com

Bit	Bit Name	Initial Value	R/W	Description
7 to 4	CKDV[3:0]	0000	R/W	Serial Oversampling Clock Division Ratio Sets the ratio between the oversampling clock (AUDIOϕ) and the serial bit clock. When the SCKD bit is 0, the setting of these bits is ignored. The serial bit clock is used in the shift register and is supplied from the SSISCK pin. 0000: AUDIOϕ 0001: AUDIOϕ/2 0010: AUDIOϕ/4 0011: AUDIOϕ/8 0100: AUDIOϕ/16 0101: AUDIOϕ/32 0110: AUDIOϕ/64 0111: AUDIOϕ/128 1000: AUDIOϕ/6 1001: AUDIOϕ/12* 1010: AUDIOϕ/24 1011: AUDIOϕ/48* 1100: AUDIOϕ/96* 1101: Setting prohibited 1110: Setting prohibited 1111: Setting prohibited Note: * These bits are only settable for channel 0. Setting these bits in the registers for channels 1 to 5 is prohibited.
3	MUEN	0	R/W	Mute Enable 0: This module is not muted. 1: This module is muted. Note: When this module is muted, the value of outputting serial data is re-written to 0 but data transmission is not stopped. Write dummy data to the SSIFTDR not to generate a transmit underflow because the number of data in the transmit FIFO is decreasing.

chanhvinh.com

Bit	Bit Name	Initial Value	R/W	Description
2	—	0	R	Reserved The read value is undefined. The write value should always be 0.
1	TEN	0	R/W	Transmit Enable 0: Disables the transmit operation. 1: Enables the transmit operation.
0	REN	0	R/W	Receive Enable 0: Disables the receive operation. 1: Enables the receive operation.

chanhvinh.com

21.3.2 Status Register (SSISR)

SSISR consists of status flags indicating the operational status of this module and bits indicating the current channel numbers and word numbers.

Bit:	31	30	29	28	27	26	25	24	23	22	21	20	19	18	17	16
	-	-	TUIRQ	TOIRQ	RUIRQ	ROIRQ	IIRQ	-	-	-	-	-	-	-	-	-
Initial value:	Undefined	Undefined	0	0	0	0	1	Undefined	Undefined	Undefined	Undefined	Undefined	Undefined	Undefined	Undefined	Undefined
R/W:	R	R	R/(W)*	R/(W)*	R/(W)*	R/(W)*	R	R	R	R	R	R	R	R	R	R

Bit:	15	14	13	12	11	10	9	8	7	6	5	4	3	2	1	0
	-	-	-	-	-	-	-	-	-	TCHNO[1:0]		TSWNO	RCHNO[1:0]		RSWNO	IDST
Initial value:	Undefined	Undefined	Undefined	Undefined	Undefined	Undefined	Undefined	Undefined	Undefined	0	0	1	0	0	1	1
R/W:	R	R	R	R	R	R	R	R	R	R	R	R	R	R	R	R

Note: * The bit can be read or written to. Writing 0 initializes the bit, but writing 1 is ignored.

Bit	Bit Name	Initial Value	R/W	Description
31, 30	—	Undefined	R	Reserved The read value is undefined. The write value should always be 0.
29	TUIRQ	0	R/(W)*	Transmit Underflow Error Interrupt Status Flag This status flag indicates that transmit data was supplied at a lower rate than was required. This bit is set to 1 regardless of the value of the TUIEN bit and can be cleared by writing 0 to this bit. If TUIRQ = 1 and TUIEN = 1, an interrupt occurs. If TUIRQ = 1, SSITDR did not have data written to it before it was required for transmission. This will lead to the same data being transmitted once more and a potential corruption of multi-channel data. As a result, this module will output erroneous data. Note: When an underflow error occurs, the current data in the data buffer of this module is transmitted until the next data is written.

chanhvinh.com

Bit	Bit Name	Initial Value	R/W	Description
28	TOIRQ	0	R/(W)*	Transmit Overflow Error Interrupt Status Flag This status flag indicates that transmit data was supplied at a higher rate than was required. This bit is set to 1 regardless of the value of the TOIEN bit and can be cleared by writing 0 to this bit. If TOIRQ = 1 and TOIEN = 1, an interrupt occurs. If TOIRQ = 1, SSIFTDR had data written to it while the transmit FIFO is full (TDC = H'8). This will lead to the loss of data and a potential corruption of multi-channel data.
27	RUIRQ	0	R/(W)*	Receive Underflow Error Interrupt Status Flag This status flag indicates that receive data was supplied at a lower rate than was required. This bit is set to 1 regardless of the value of the RUIEN bit and can be cleared by writing 0 to this bit. If RUIRQ = 1 and RUIEN = 1, an interrupt occurs. If RUIRQ = 1, SSIFRDR was read while the receive FIFO is empty (RDC = H'0).This can cause invalid receive data to be stored, which may lead to corruption of multi-channel data.
26	ROIRQ	0	R/(W)*	Receive Overflow Error Interrupt Status Flag This status flag indicates that receive data was supplied at a higher rate than was required. This bit is set to 1 regardless of the value of the ROIEN bit and can be cleared by writing 0 to this bit. If ROIRQ = 1 and ROIEN = 1, an interrupt occurs. If ROIRQ = 1, SSIRDR was not read before there was new unread data written to it. This will lead to the loss of data and a potential corruption of multi-channel data. Note: When an overflow error occurs, the current data in the data buffer of this module is overwritten by the next incoming data from the SSI interface.

chanhvinh.com

Bit	Bit Name	Initial Value	R/W	Description
25	IIRQ	1	R	Idle Mode Interrupt Status Flag This interrupt status flag indicates whether this module is in idle state. This bit is set regardless of the value of the IIEN bit to allow polling. The interrupt can be masked by clearing IIEN, but cannot be cleared by writing to this bit. If IIRQ = 1 and IIEN = 1, an interrupt occurs. 0: This module is not in idle state. 1: This module is in idle state.
24 to 7	—	Undefined	R	Reserved The read value is undefined. The write value should always be 0.
6, 5	TCHNO [1:0]	00	R	Transmit Channel Number These bits show the current channel number. These bits indicate which channel is required to be written to SSITDR. This value will change as the data is copied to the shift register, regardless of whether the data is written to SSITDR. When TDM or CONT is 1, these bits cannot be used.
4	TSWNO	1	R	Transmit Serial Word Number This status bit indicates the current word number. This bit indicates which system word is required to be written to SSITDR. This value will change as the data is copied to the shift register, regardless of whether the data is written to SSITDR. When TDM or CONT is 1, this bit cannot be used.
3, 2	RCHNO [1:0]	00	R	Receive Channel Number These bits show the current channel number. These bits indicate which channel the data in SSIRDR currently represents. This value will change as the data in SSIRDR is updated from the shift register. When TDM or CONT is 1, these bits cannot be used.

chanhvinh.com

Bit	Bit Name	Initial Value	R/W	Description
1	RSWNO	1	R	Receive Serial Word Number This status bit indicates the current word number. This bit indicates which system word the data in SSIRDR currently represents. This value will change as the data in SSIRDR is updated from the shift register, regardless of whether SSIRDR has been read. When TDM or CONT is 1, this bit cannot be used.
0	IDST	1	R	Idle Mode Status Flag This status flag indicates that the serial bus activity has stopped. This bit is cleared to 0 if the serial bus are currently active while TEN = 1 or REN = 1. This bit is automatically set to 1 if both TEN and REN are cleared to 0 and the current system word communication is completed. Note: If the external device stops the serial bus clock before the current system word is completed, this bit is not set.

Note: * The bit can be read or written to. Writing 0 initializes the bit, but writing 1 is ignored.

chanhvinh.com

21.3.3 Transmit Data Register (SSITDR)

SSITDR is a 32-bit register that stores data to be transmitted. The data for transmission to be stored to SSITDR is automatically transferred from the transmit FIFO data register.

Data written to this register is transferred to the shift register upon transmission request. If the data word length is less than 32 bits, the alignment is determined by the setting of the PDTA control bit in SSICR.

The CPU cannot read or write data from/to SSITDR.

Bit:	31	30	29	28	27	26	25	24	23	22	21	20	19	18	17	16
Initial value:	-	-	-	-	-	-	-	-	-	-	-	-	-	-	-	-
R/W:	-	-	-	-	-	-	-	-	-	-	-	-	-	-	-	-

Bit:	15	14	13	12	11	10	9	8	7	6	5	4	3	2	1	0
Initial value:	-	-	-	-	-	-	-	-	-	-	-	-	-	-	-	-
R/W:	-	-	-	-	-	-	-	-	-	-	-	-	-	-	-	-

21.3.4 Receive Data Register (SSIRDR)

SSIRDR is a 32-bit register that stores received data. The received data stored in SSIRDR is automatically transferred to the receive FIFO data register.

Data in this register is transferred from the shift register each time data word is received. If the data word length is less than 32 bits, the alignment is determined by the setting of the PDTA control bit in SSICR.

The CPU cannot read or write data from/to SSIRDR.

Bit:	31	30	29	28	27	26	25	24	23	22	21	20	19	18	17	16
Initial value:	-	-	-	-	-	-	-	-	-	-	-	-	-	-	-	-
R/W:	-	-	-	-	-	-	-	-	-	-	-	-	-	-	-	-

Bit:	15	14	13	12	11	10	9	8	7	6	5	4	3	2	1	0
Initial value:	-	-	-	-	-	-	-	-	-	-	-	-	-	-	-	-
R/W:	-	-	-	-	-	-	-	-	-	-	-	-	-	-	-	-

chanhvinh.com

21.3.5 FIFO Control Register (SSIFCR)

SSIFCR is a readable/writable 32-bit register that specifies the data trigger numbers and enables or disables FIFO data reset and interrupt requests for the transmit FIFO data register and the receive FIFO data register.

SSIFCR can always be read or written by the CPU.

Bit:	31	30	29	28	27	26	25	24	23	22	21	20	19	18	17	16
	-	-	-	-	-	-	-	-	-	-	-	-	-	-	-	-
Initial value:	0	0	0	0	0	0	0	0	0	0	0	0	0	0	0	0
R/W:	R	R	R	R	R	R	R	R	R	R	R	R	R	R	R	R

Bit:	15	14	13	12	11	10	9	8	7	6	5	4	3	2	1	0
	-	-	-	-	-	-	-	-	TTRG[1:0]		RTRG[1:0]		TIE	RIE	TFRST	RFRST
Initial value:	0	0	0	0	0	0	0	0	0	0	0	0	0	0	0	0
R/W:	R	R	R	R	R	R	R	R	R/W	R/W	R/W	R/W	R/W	R/W	R/W	R/W

Bit	Bit Name	Initial Value	R/W	Description
31 to 8	—	All 0	R	Reserved These bits are always read as 0. The write value should always be 0.
7, 6	TTRG[1:0]	00	R/W	Transmit Data Trigger Number These bits specify the number of transmit data bytes in the FIFO (transmit trigger number) at which the TDE flag in the FIFO status register (SSIFSR) is set during transmission. The TDE flag is set to 1 when the number of transmit data bytes in the transmit FIFO data register (SSIFTDR) has become equal to or less than the set trigger number shown below. 00: 7 (1)* 01: 6 (2)* 10: 4 (4)* 11: 2 (6)* Note: * The values in parenthesis are the number of empty stages in SSIFTDR at which the TDE flag is set.

chanhvinh.com

Bit	Bit Name	Initial Value	R/W	Description
5, 4	RTRG[1:0]	00	R/W	Receive Data Trigger Number These bits specify the number of received data bytes in the FIFO (receive trigger number) at which the RDF flag in the FIFO status register (SSIFSR) is set during reception. The RDF flag is set to 1 when the number of received data bytes in the receive FIFO data register (SSIFRDR) has become equal to or greater than the set trigger number shown below. 00: 1 01: 2 10: 4 11: 6
3	TIE	0	R/W	Transmit Interrupt Enable Enables or disables generation of transmit data empty interrupt (TXI) requests in the following situation: during transmission, the data for transmission in the transmit FIFO data register (SSIFTDR) is transferred to the transmit data register (SSITDR) and the number of data bytes in the transmit FIFO data register has become less than the set transmit trigger number; and thus the TDE flag in the FIFO status register (SSIFSR) is set to 1. 0: Transmit data empty interrupt (TXI) request is disabled 1: Transmit data empty interrupt (TXI) request is enabled* Note: * TXI can be cleared by clearing either the TDE flag (see the description of the TDE bit for details) or TIE bit.

chanhvinh.com

Bit	Bit Name	Initial Value	R/W	Description
2	RIE	0	R/W	Receive Interrupt Enable Enables or disables generation of receive data full interrupt (RXI) requests when the RDF flag in the FIFO status register (SSIFSR) is set to 1 during reception. 0: Receive data full interrupt (RXI) request is disabled 1: Receive data full interrupt (RXI) request is enabled* Note: * RXI can be cleared by clearing either the RDF flag (see the description of the RDF bit for details) or RIE bit.
1	TFRST	0	R/W	Transmit FIFO Data Register Reset Invalidates the data in the transmit FIFO data register (SSIFTDR) to reset the FIFO to an empty state. 0: Reset is disabled. 1: Reset is enabled. Note: FIFO is reset at a power-on reset.
0	RFRST	0	R/W	Receive FIFO Data Register Reset Invalidates the data in the receive FIFO data register (SSIFRDR) to reset the FIFO to an empty state. 0: Reset is disabled 1: Reset is enabled Note: FIFO is reset at a power-on reset.

chanhvinh.com

21.3.6 FIFO Status Register (SSIFSR)

SSIFSR consists of status flags indicating the operating status of the transmit FIFO data register and the receive FIFO data register.

Bit:	31	30	29	28	27	26	25	24	23	22	21	20	19	18	17	16
	-	-	-	-	TDC[3:0]				-	-	-	-	-	-	-	TDE
Initial value:	0	0	0	0	0	0	0	0	0	0	0	0	0	0	0	1
R/W:	R	R	R	R	R	R	R	R	R	R	R	R	R	R	R	R/(W)*

Bit:	15	14	13	12	11	10	9	8	7	6	5	4	3	2	1	0
	-	-	-	-	RDC[3:0]				-	-	-	-	-	-	-	RDF
Initial value:	0	0	0	0	0	0	0	0	0	0	0	0	0	0	0	0
R/W:	R	R	R	R	R	R	R	R	R	R	R	R	R	R	R	R/(W)*

Bit	Bit Name	Initial Value	R/W	Description
31 to 28	—	All 0	R	Reserved These bits are always read as 0. The write value should always be 0.
27 to 24	TDC[3:0]	0000	R	Number of Data Bytes Stored in SSIFTDR TDC[3:0] = H'0 indicates no data for transmission. TDC[3:0] = H'8 indicates that 32 bytes of data for transmission is stored in SSIFTDR.
23 to 17	—	All 0	R	Reserved These bits are always read as 0. The write value should always be 0.
16	TDE	1	R/(W)*	Transmit Data Empty Indicates that, when the FIFO is operating for transmission, the data for transmission in the transmit FIFO data register (SSIFTDR) is transferred to the transmit data register (SSITDR), the number of data bytes in the FIFO data register has become less than the transmit trigger number specified by TTRG[1:0] in the FIFO control register (SSIFCR), and thus writing of data transmission to SSIFTDR has been enabled.

chanhvinh.com

Bit	Bit Name	Initial Value	R/W	Description
16	TDE	1	R/(W)*	0: Number of data bytes for transmission in SSIFTDR is greater than the set transmit trigger number. [Clearing conditions] • 0 is written to TDE after data of the number of bytes larger than the set transmit trigger number is written to SSIFTDR. • The direct memory access controller is activated by transmit data empty (TXI) interrupt, and data of the number of bytes larger than the set transmit trigger number is written to SSIFTDR. 1: Number of data bytes for transmission in SSIFTDR is equal to or less than the set transmit trigger number.* [Setting conditions] • Power-on reset • Number of transmission data bytes to be stored in SSIFTDR has become equal to or less than the set transmit trigger number. Note: * Since SSIFTDR is an 8-stage FIFO register, the amount of data that can be written to it while TDE = 1 is "8 – transmit trigger number to be specified" bytes at maximum. Writing more data will be ignored. The number of data bytes in SSIFTDR is indicated in the TDC bits in SSIFSR.
15 to 12	—	All 0	R	Reserved These bits are always read as 0. The write value should always be 0.
11 to 8	RDC[3:0]	0000	R	Number of Data Bytes Stored in SSIFRDR RDC[3:0] = H'0 indicates no received data. RDC[3:0] = H'8 indicates that 32 bytes of received data is stored in SSIFRDR.
7 to 1	—	All 0	R	Reserved This bit is always read as 0. The write value should always be 0.

chanhvinh.com

Bit	Bit Name	Initial Value	R/W	Description
0	RDF	0	R/(W)*	Receive Data Full Indicates that, when the FIFO is operating for reception, the received data is transferred to the receive FIFO data register (SSIFRDR) and the number of data bytes in the FIFO data register has become greater than the receive trigger number specified by RTRG[1:0] in the FIFO control register (SSIFCR). 0: Number of received data bytes in SSIFRDR is less than the set receive trigger number. [Clearing conditions] • Power-on reset • 0 is written to RDF after the receive FIFO is empty with writing 1 to RFRST. • 0 is written to RDF after data is read from SSIFRDR until the number of data bytes in SSIFRDR becomes less than the set receive trigger number. • The direct memory access controller is activated by receive data full (RXI) interrupt, and data is read from SSIFRDR until the number of data bytes in SSIFRDR becomes less than the set receive trigger number. 1: Number of received data bytes in SSIFRDR is equal to or greater than the set receive trigger number. [Setting condition] • Data of the number of bytes that is equal to or greater than the set receive trigger number is stored in SSIFRDR.* Note: * Since SSIFRDR is an 8-stage FIFO register, the amount of data that can be read from it while RDF = 1 is the set receive trigger number of bytes at maximum. Continuing to read data from SSIFRDR after reading all the data will result in undefined data to be read. The number of data bytes in SSIFRDR is indicated in the RDC bits in SSIFSR.

Note: * The bit can be read or written to. Writing 0 initializes the bit, but writing 1 is ignored.

chanhvinh.com

21.3.7 Transmit FIFO Data Register (SSIFTDR)

SSIFTDR is a FIFO register consisting of eight stages of 32-bit registers for storing data to be serially transmitted. On detecting that the transmit data register (SSITDR) is empty, this module transfers the data for transmission written to SSIFTDR to SSITDR to start serial transmission, which can continue until SSIFTDR becomes empty. SSIFTDR can be written to by the CPU at any time.

Note that when SSIFTDR is full of data (32 bytes), the next data cannot be written to it. If writing is attempted, it will be ignored and an overflow occurs.

Bit:	31	30	29	28	27	26	25	24	23	22	21	20	19	18	17	16
Initial value:	-	-	-	-	-	-	-	-	-	-	-	-	-	-	-	-
R/W:	W	W	W	W	W	W	W	W	W	W	W	W	W	W	W	W

Bit:	15	14	13	12	11	10	9	8	7	6	5	4	3	2	1	0
Initial value:	-	-	-	-	-	-	-	-	-	-	-	-	-	-	-	-
R/W:	W	W	W	W	W	W	W	W	W	W	W	W	W	W	W	W

Note: * Not writable during reception.

chanhvinh.com

21.3.8 Receive FIFO Data Register (SSIFRDR)

SSIFRDR is a FIFO register consisting of eight stages of 32-bit registers for storing serially received data. When four bytes of data have been received, this module transfers the received data in the receive data register (SSIRDR) to SSIFRDR to complete reception operation. Reception can continue until 32 bytes of data have been stored to SSIFRDR. SSIFRDR can be read by the CPU but cannot be written to. Note that when SSIFRDR is read when it stores no received data, undefined values will be read and a receive underflow occurs.

After SSIFRDR becomes full of received data, the data received thereafter will be lost and a receive overflow occurs.

Bit:	31	30	29	28	27	26	25	24	23	22	21	20	19	18	17	16
Initial value:	-	-	-	-	-	-	-	-	-	-	-	-	-	-	-	-
R/W:	R	R	R	R	R	R	R	R	R	R	R	R	R	R	R	R

Bit:	15	14	13	12	11	10	9	8	7	6	5	4	3	2	1	0
Initial value:	-	-	-	-	-	-	-	-	-	-	-	-	-	-	-	-
R/W:	R	R	R	R	R	R	R	R	R	R	R	R	R	R	R	R

chanhvinh.com

21.3.9 TDM Mode Register (SSITDMR)

SSITDMR is a readable/writable 32-bit register that enables or disables TDM mode and WS continue mode.

Bit:	31	30	29	28	27	26	25	24	23	22	21	20	19	18	17	16
	-	-	-	-	-	-	-	-	-	-	-	-	-	-	-	-
Initial value:	0	0	0	0	0	0	0	0	0	0	0	0	0	0	0	0
R/W:	R	R	R	R	R	R	R	R	R	R	R	R	R	R	R	R

Bit:	15	14	13	12	11	10	9	8	7	6	5	4	3	2	1	0
	-	-	-	-	-	-	-	CONT	-	-	-	-	-	-	-	TDM
Initial value:	0	0	0	0	0	0	0	0	0	0	0	0	0	0	0	0
R/W:	R	R	R	R	R	R	R	R/W	R	R	R	R	R	R	R	R/W

Bit	Bit Name	Initial Value	R/W	Description
31 to 9	—	All 0	R	Reserved These bits are always read as 0. The write value should always be 0.
8	CONT	0	R/W	WS Continue Mode 0: Disables WS continue mode. 1: Enables WS continue mode. Note: This bit can be set only in master mode (SCKD = 1 and SWSD = 1)
7 to 1	—	All 0	R	Reserved These bits are always read as 0. The write value should always be 0.
0	TDM	0	R/W	TDM Mode 0: Disables TDM mode. 1: Enables TDM mode.

chanhvinh.com

21.4 Operation Description

21.4.1 Bus Format

This module can operate as a transmitter or a receiver and can be configured into many serial bus formats in either mode.

The bus format can be selected from one of the 12 major modes shown in table 21.3.

chanhvinh.com

Table 21.3 Bus Format for SSIF Module

	TEN	REN	SCKD	SWSD	TDM	MUEN	IIEN	TOIEN	TUIEN	ROIEN	RUIEN	CONT	SWSP	DEL	PDTA	SDTA	SPDP	SCKP	SWL[2:0]	DWL[2:0]	CHNL[1:0]
Non-Compression Slave Receiver	0	1	0	0	0	Control Bits							Configuration Bits								
Non-Compression Slave Transmitter	1	0	0	0	0																
Non-Compression Slave Transceiver	1	1	0	0	0																
Non-Compression Master Receiver	0	1	1	1	0																
Non-Compression Master Transmitter	1	0	1	1	0																
Non-Compression Master Transceiver	1	1	1	1	0																
TDM Slave Receiver	0	1	0	0	1								0	Configuration Bits							
TDM Slave Transmitter	1	0	0	0	1								0								
TDM Slave Transceiver	1	1	0	0	1								0								
TDM Master Receiver	0	1	1	1	1								0								
TDM Master Transmitter	1	0	1	1	1								0								
TDM Master Transceiver	1	1	1	1	1								0								

chanhvinh.com

21.4.2 Non-Compressed Modes

The non-compressed modes support all serial audio streams split into channels. It supports the I^2S compatible format as well as many more variants on these modes.

(1) Slave Receiver

This mode allows the module to receive serial data from another device. The clock and word select signal used for the serial data stream is also supplied from an external device. If these signals do not conform to the format specified in the configuration fields of this module, operation is not guaranteed.

(2) Slave Transmitter

This mode allows the module to transmit serial data to another device. The clock and word select signal used for the serial data stream is also supplied from an external device. If these signals do not conform to the format specified in the configuration fields of this module, operation is not guaranteed.

(3) Slave Transceiver

This mode allows serial data transmission and reception between this module and another device. The clock and word select signal used for the serial data stream is also supplied from an external device. If these signals do not conform to the format specified in the configuration fields of this module, operation is not guaranteed.

(4) Master Receiver

This mode allows the module to receive serial data from another device. The clock and word select signals are internally derived from the oversampling clock. The format of these signals is defined in the configuration fields of this module. If the incoming data does not follow the configured format, operation is not guaranteed.

(5) Master Transmitter

This mode allows the module to transmit serial data to another device. The clock and word select signals are internally derived from the oversampling clock. The format of these signals is defined in the configuration fields of this module.

chanhvinh.com

(6) Master Transceiver

This mode allows serial data transmission and reception between this module and another device. The clock and word select signals are internally derived from the oversampling clock. The format of these signals is defined in the configuration fields of this module.

(7) Operating Setting Related to Word Length

All bits related to the SSICR's word length are valid in non-compressed modes. There are many configurations this module supports, but some of the combinations are shown below for the I^{2}S compatible format, MSB-first and left-aligned format, and MSB-first and right-aligned format.

- I^{2}S Compatible Format

Figures 21.2 and 21.3 demonstrate the I^{2}S compatible format both without and with padding. Padding occurs when the data word length is smaller than the system word length.

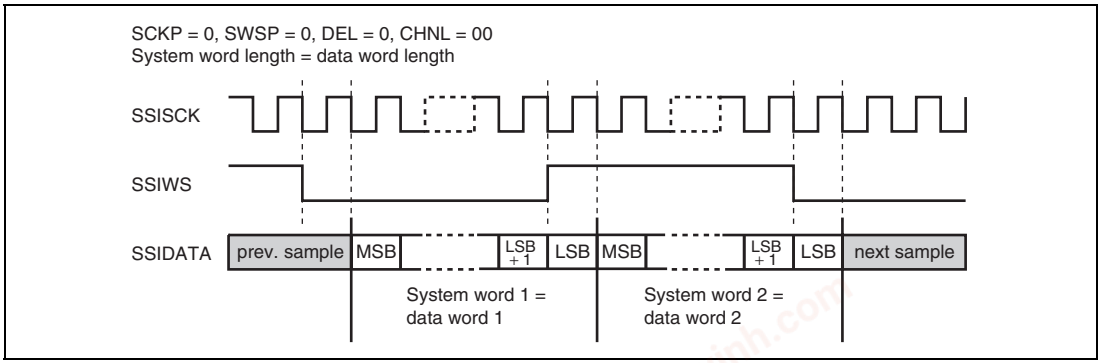

Figure 21.2 I^{2}S Compatible Format (without Padding)

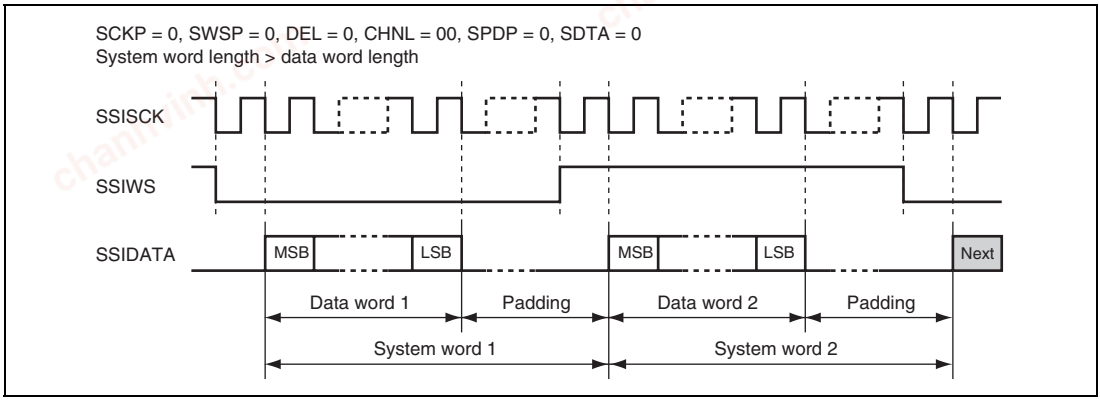

Figure 21.3 I^{2}S Compatible Format (with Padding)

chanhvinh.com

Figure 21.4 shows the MSB-first and left-aligned format and figure 21.5 shows the MSB-first and right-aligned format.

- MSB-first and Left-aligned Format

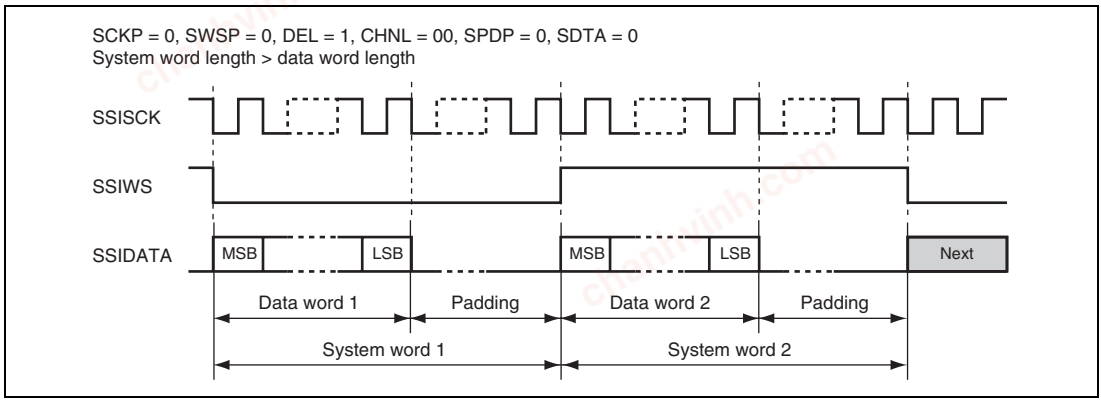

Figure 21.4 MSB-first and Left-aligned Format
(Transmitted and Received in the Order of Serial Data and Padding Bits)

- MSB-first and Right-aligned Format

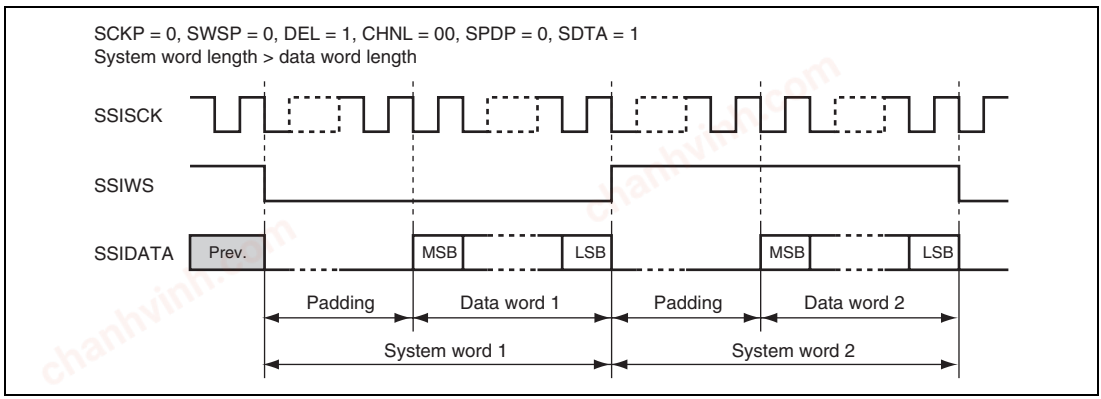

Figure 21.5 MSB-first and Right-aligned Format
(Transmitted and Received in the Order of Padding Bits and Serial Data)

chanhvinh.com

(8) Multi-channel Formats

Some devices extend the definition of the I²S bus specification and allow more than 2 channels to be transferred within two system words.

This module supports the transfer of 4, 6, and 8 channels by using the CHNL, SWL and DWL bits only when the system word length (SWL) is greater than or equal to the data word length (DWL) multiplied by channels (CHNL).

Table 21.4 shows the number of padding bits for each of the valid setting. If setting is not valid, "—" is indicated instead of a number.

Table 21.4 The Number of Padding Bits for Each Valid Setting

Padding Bits per System Word			DWL[2:0]	000	001	010	011	100	101	110
CHNL [1:0]	Decoded Channels per System Word	SWL [2:0]	Decoded Word Length	8	16	18	20	22	24	32
00	1	000	8	0	—	—	—	—	—	—
		001	16	8	0	—	—	—	—	—
		010	24	16	8	6	4	2	0	—
		011	32	24	16	14	12	10	8	0
		100	48	40	32	30	28	26	24	16
		101	64	56	48	46	44	42	40	32
		110	128	120	112	110	108	106	104	96
		111	256	248	240	238	236	234	232	224
01	2	000	8	—	—	—	—	—	—	—
		001	16	0	—	—	—	—	—	—
		010	24	8	—	—	—	—	—	—
		011	32	16	0	—	—	—	—	—
		100	48	32	16	12	8	4	0	—
		101	64	48	32	28	24	20	16	0
		110	128	112	96	92	88	84	80	64
		111	256	240	224	220	216	212	208	192

chanhvinh.com

Padding Bits per System Word			DWL[2:0]	000	001	010	011	100	101	110
CHNL [1:0]	Decoded Channels per System Word	SWL [2:0]	Decoded Word Length	8	16	18	20	22	24	32
10	3	000	8	—	—	—	—	—	—	—
		001	16	—	—	—	—	—	—	—
		010	24	0	—	—	—	—	—	—
		011	32	8	—	—	—	—	—	—
		100	48	24	0	—	—	—	—	—
		101	64	40	16	10	4	—	—	—
		110	128	104	80	74	68	62	56	32
		111	256	232	208	202	196	190	184	160
11	4	000	8	—	—	—	—	—	—	—
		001	16	—	—	—	—	—	—	—
		010	24	—	—	—	—	—	—	—
		011	32	0	—	—	—	—	—	—
		100	48	16	—	—	—	—	—	—
		101	64	32	0	—	—	—	—	—
		110	128	96	64	56	48	40	32	0
		111	256	224	192	184	176	168	160	128

chanhvinh.com

When this module acts as a transmitter, each word written to SSITDR is transmitted to the serial audio bus in the order they are written. When this module acts as a receiver, each word received by the serial audio bus is read in the order received from the SSIRDR register.

Figures 21.6 to 21.8 show how the data on 4, 6, and 8 channels are transferred to the serial audio bus. Note that there are no padding bits in the first example, the second example is left-aligned and the third is right-aligned. The other conditions in these examples have been selected arbitrarily.

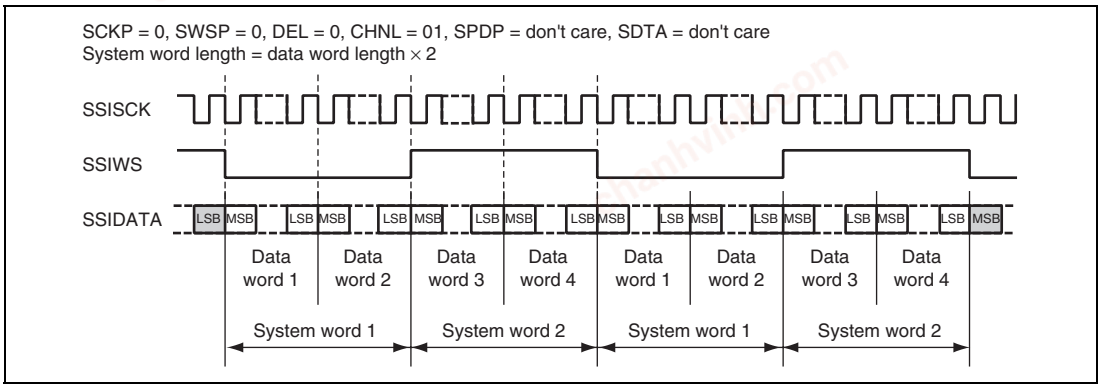

Figure 21.6 Multi-Channel Format (4 Channels Without Padding)

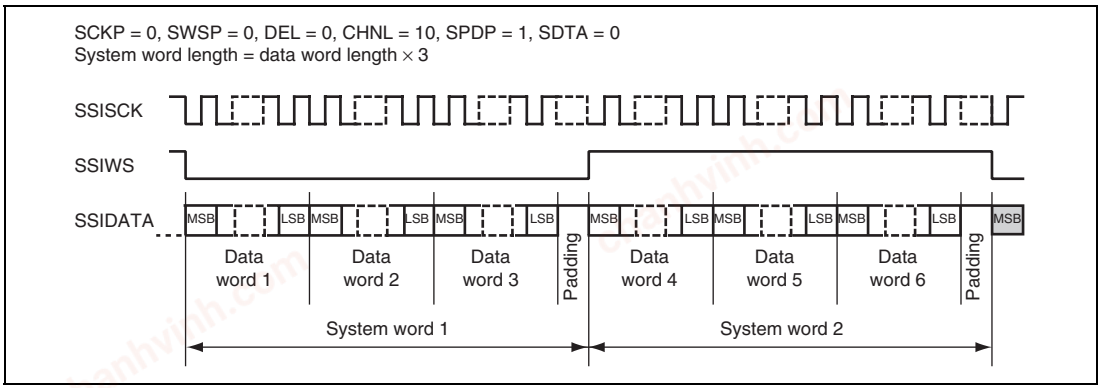

Figure 21.7 Multi-Channel Format (6 Channels with High Padding)

chanhvinh.com

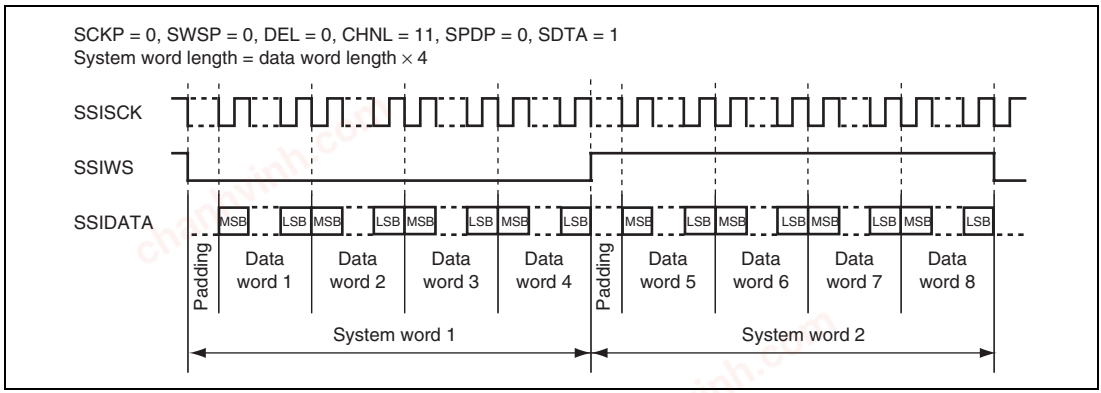

Figure 21.8 Multi-Channel Format (8 Channels; Transmitting and Receiving in the Order of Serial Data and Padding Bits; with Padding)

(9) Bit Setting Configuration Format

Several more configuration bits in non-compressed mode are shown below. These bits are not mutually exclusive, but some combinations may not be useful for any other device.

These configuration bits are described below with reference to figure 21.9.

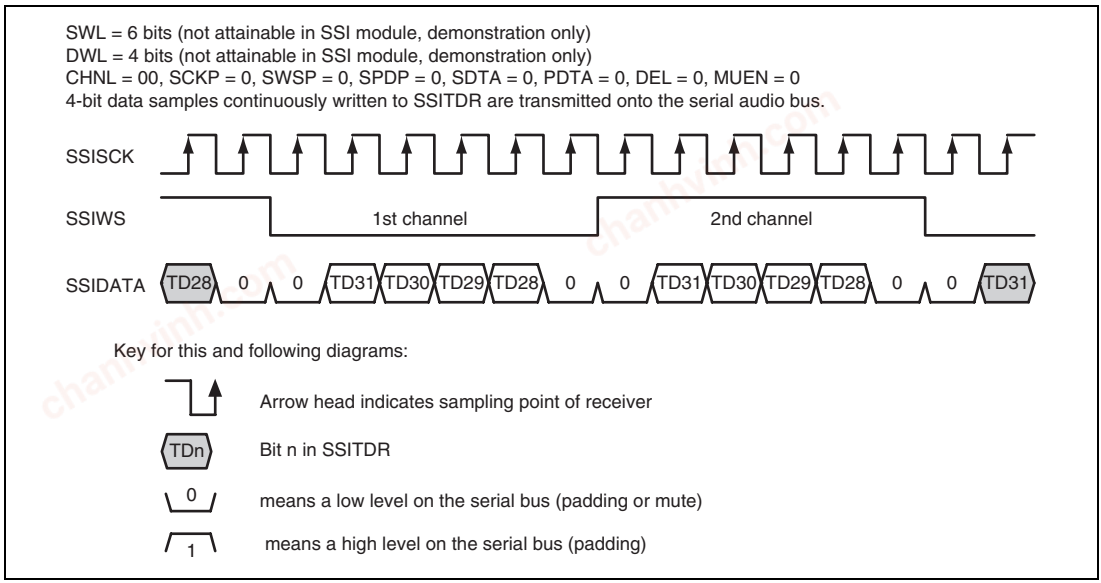

Figure 21.9 Basic Sample Format (Transmit Mode with Example System/Data Word Length)

chanhvinh.com

Figure 21.9 uses a system word length of 6 bits and a data word length of 4 bits. These settings are not possible with this module but are used only for clarification of the other configuration bits.

- Inverted Clock

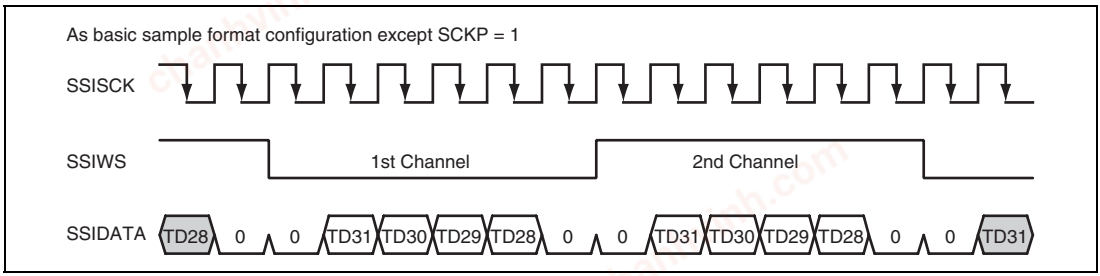

Figure 21.10 Inverted Clock

- Inverted Word Select

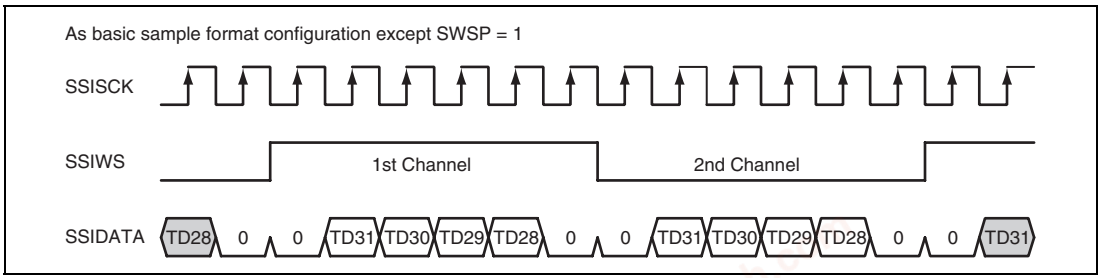

Figure 21.11 Inverted Word Select

- Inverted Padding Polarity

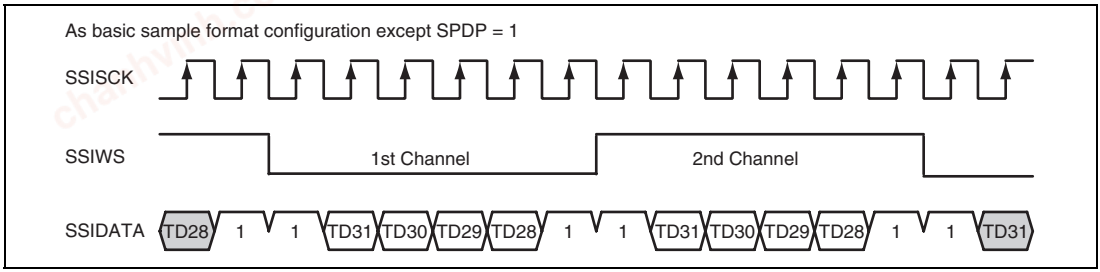

Figure 21.12 Inverted Padding Polarity

chanhvinh.com

- Transmitting and Receiving in the Order of Padding Bits and Serial Data; with Delay

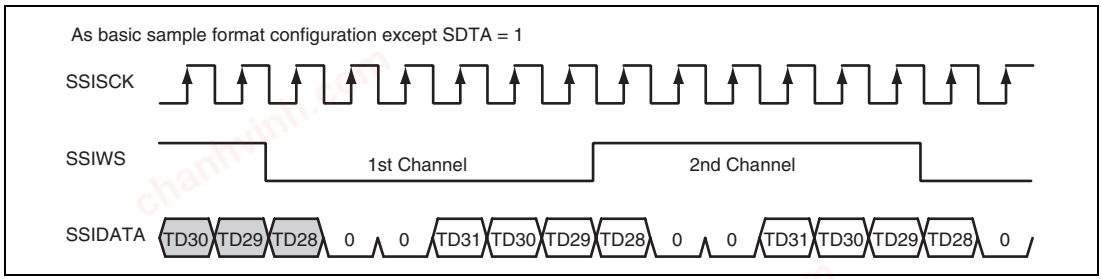

Figure 21.13 Transmitting and Receiving in the Order of Padding Bits and Serial Data; with Delay

- Transmitting and Receiving in the Order of Padding Bits and Serial Data; without Delay

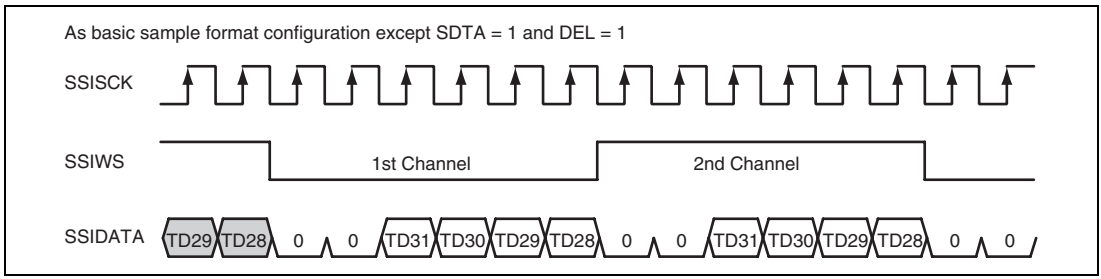

Figure 21.14 Transmitting and Receiving in the Order of Padding Bits and Serial Data; without Delay

- Transmitting and Receiving in the Order of Serial Data and Padding Bits; without Delay

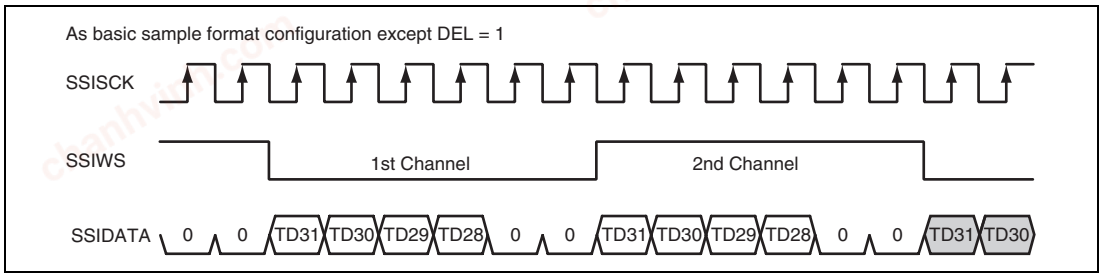

Figure 21.15 Transmitting and Receiving in the Order of Serial Data and Padding Bits; without Delay

chanhvinh.com

- Parallel Right-Aligned with Delay

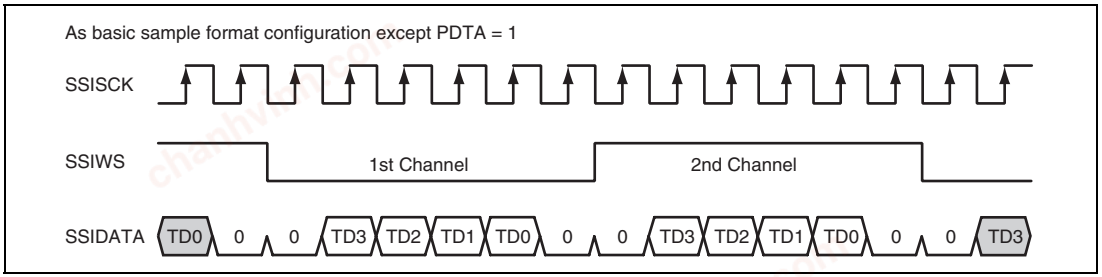

Figure 21.16 Parallel Right-Aligned with Delay

- Mute Enabled

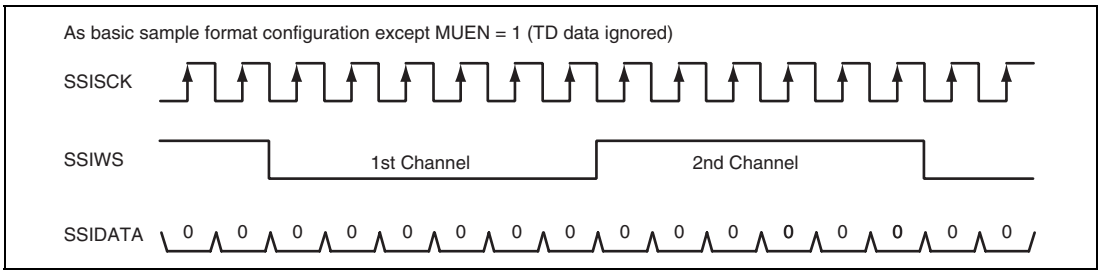

Figure 21.17 Mute Enabled

chanhvinh.com

21.4.3 TDM Mode

TDM mode is provided to enable connection to multi-channel devices for TDM. This mode can be set using the TDM bit in the TDM mode register (SSITDMR). In this mode, the SSIWS signal is high only for system word 1 period and low for the other periods. The pulse produced on the SSIWS signal is defined as SYNC pulse. Note that the SYNC pulse always has the positive polarity (high only for system word 1 period).

Figures 21.18 and 21.19 show the TDM formats without and with padding, respectively.

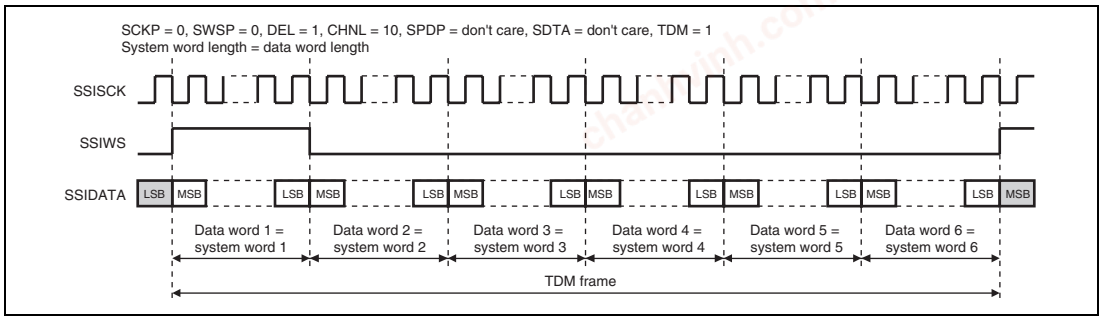

Figure 21.18 TDM Format (6 system words, no padding)

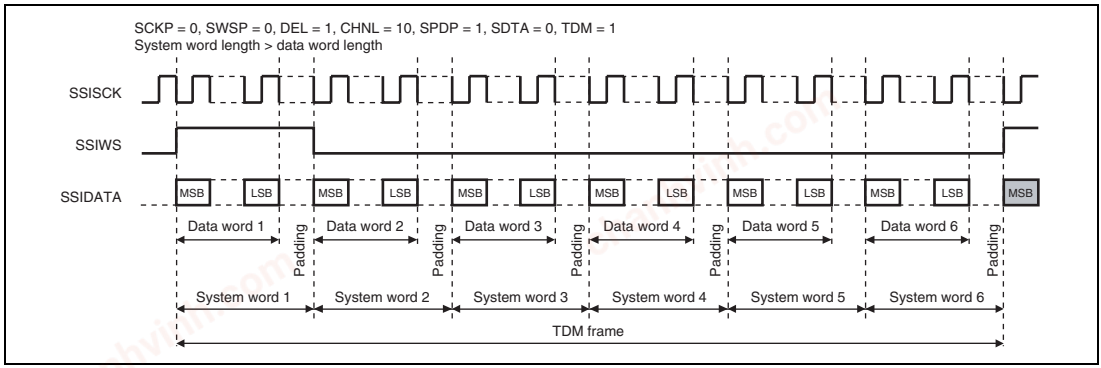

Figure 21.19 TDM Format (6 system words, with padding)

chanhvinh.com

21.4.4 WS Continue Mode

In WS continue mode, the SSIWS signal continues to be output irrespective whether data transfer is enabled or disabled. This mode can be set using the CONT bit in the CONT bit in the TDM mode register (SSITDMR). With this mode enabled, the SSIWS signal does not stop but continues operating even if TEN and REN bits in the control register (SSICR) are both set to 0 (transfer disabled). With this mode disabled, the SSIWS signal stops if TEN and REN bits are both set to 0.

Figures 21.20 and 21.21 show the operations with WS continue mode enabled and disabled, respectively.

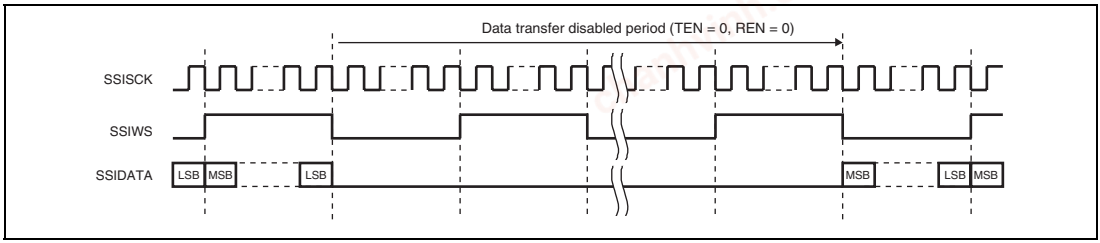

Figure 21.20 WS Continue Mode Enabled

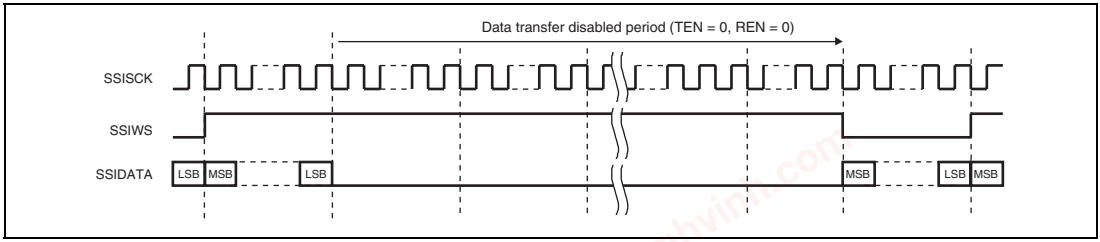

Figure 21.21 WS Continue Mode Disabled

chanhvinh.com

21.4.5 Operation Modes

There are three modes of operation: configuration, enabled and disabled. Figure 21.22 shows how the module enters each of these modes.

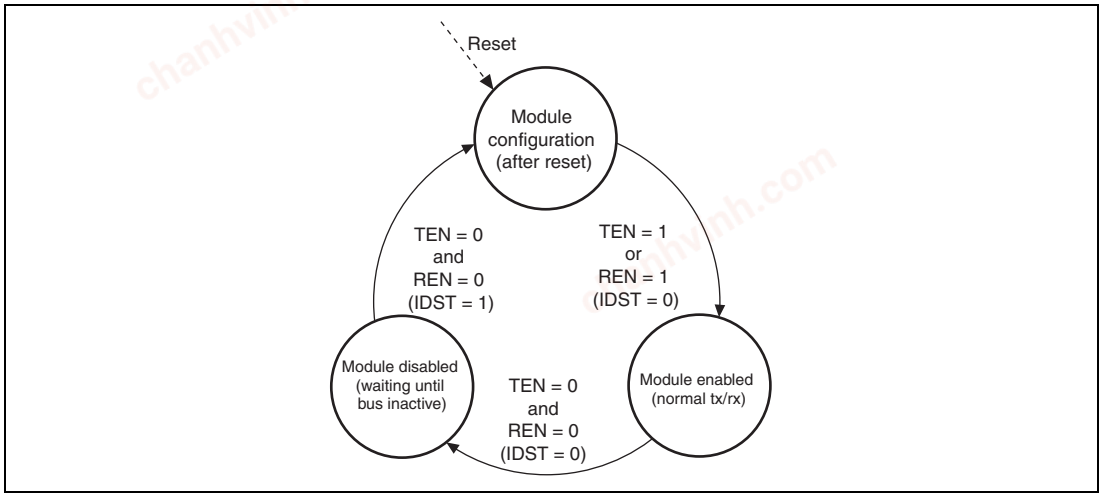

Figure 21.22 Operation Modes

(1) Configuration Mode

This mode is entered after the module is released from reset. All required configuration fields in the control register should be defined in this mode, before this module is enabled by setting the TEN and REN bits.

Setting the TEN and REN bits causes the module to enter the module enabled mode.

(2) Module Enabled Mode

Operation of the module in this mode is dependent on the operation mode selected. For details, refer to section 21.4.6, Transmit Operation and section 21.4.7, Receive Operation, below.

chanhvinh.com

21.4.6 Transmit Operation

Transmission can be controlled either by DMA transfer or interrupt.

DMA control is preferred to reduce the processor load. In DMA control mode, the processor will only receive interrupts if there is an underflow or overflow of data or if the DMA transfer has been completed.

The alternative method is using the interrupts that this module generates to supply data as required.

When disabling this module, the clock* must be kept supplied to this module until the IIRQ bit indicates that the module is in the idle state.

Figure 21.23 shows the transmit operation in DMA control mode, and figure 21.24 shows the transmit operation in interrupt control mode.

Note: * Input clock from the SSISCK pin when SCKD = 0.
Oversampling clock when SCKD = 1.

chanhvinh.com

(1) Transmission Using Direct Memory Access Controller

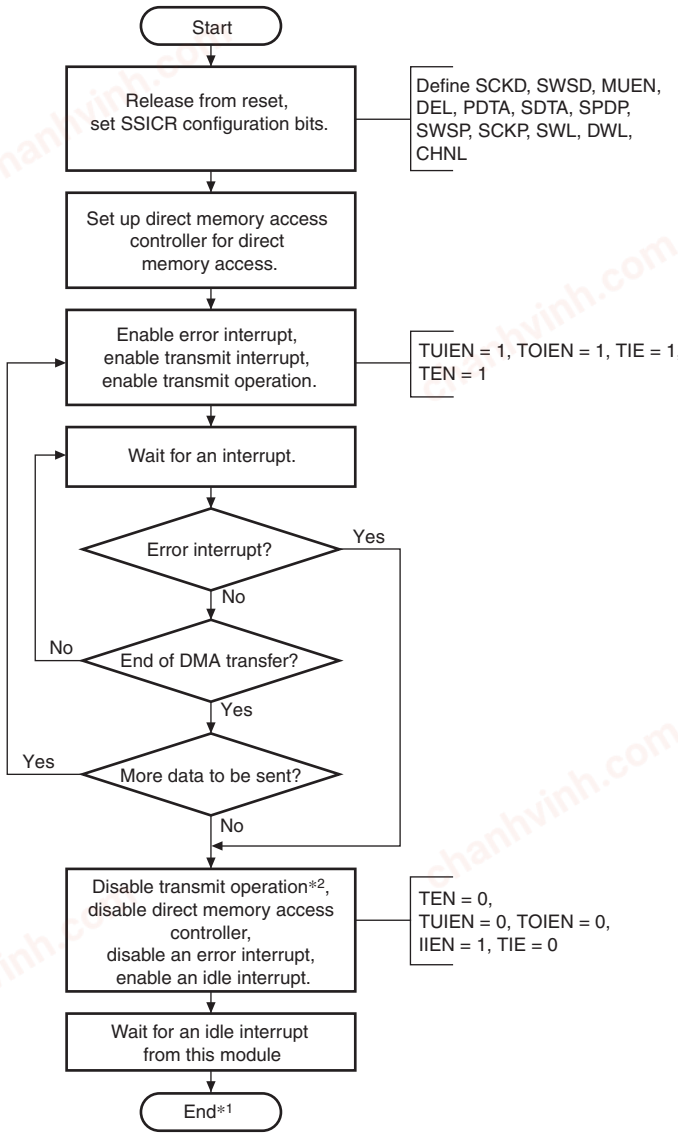

Notes: 1. If an error interrupt (underflow/overflow) occurs, go back to the start in the flowchart again.
2. When restarting transmission after disabling transmit operation (TEN = 0) while WS continue mode is disabled, first apply a software reset before going back to start in the flowchart.

Figure 21.23 Transmission Using Direct Memory Access Controller

chanhvinh.com

(2) Transmission Using Interrupt-Driven Data Flow Control

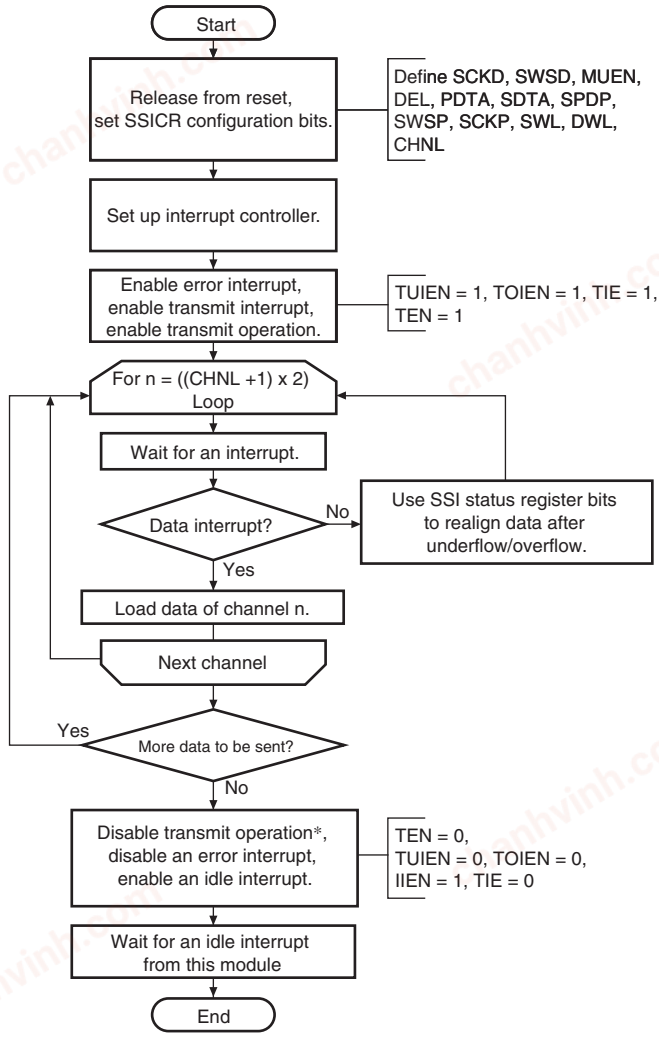

Notes: * When restarting transmission after disabling transmit operation (TEN = 0) while WS continue mode is disabled, first apply a software reset before going back to start in the flowchart.

Figure 21.24 Transmission Using Interrupt-Driven Data Flow Control

chanhvinh.com

21.4.7 Receive Operation

Like transmission, reception can be controlled either by DMA transfer or interrupt.

Figures 21.25 and 21.26 show the flow of operation.

When disabling this module, the clock* must be kept supplied to this module until the IIRQ bit indicates that the module is in the idle state.

Note: * Input clock from the SSISCK pin when SCKD = 0.
Oversampling clock when SCKD = 1.

chanhvinh.com

(1) Reception Using Direct Memory Access Controller

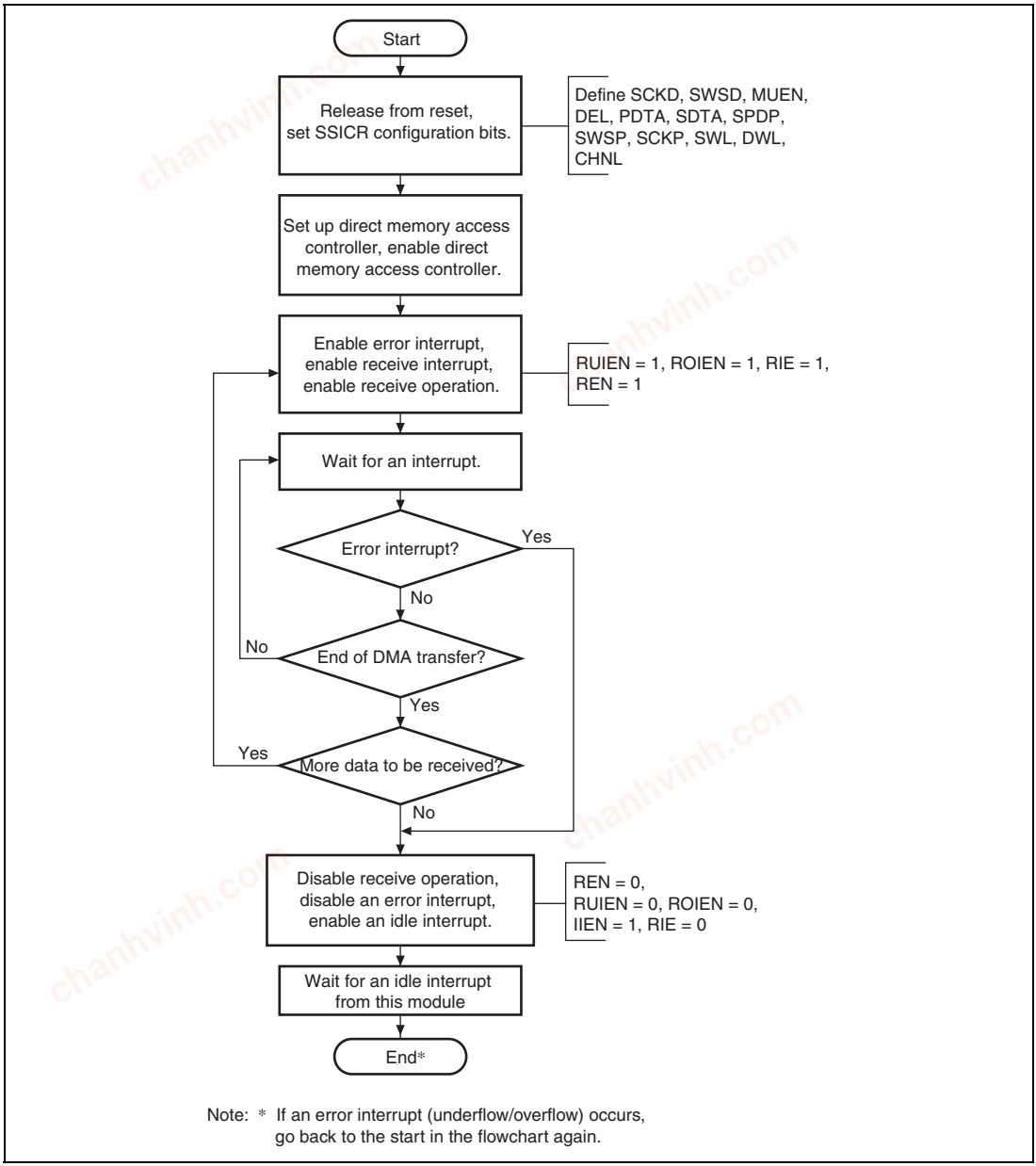

Figure 21.25 Reception Using Direct Memory Access Controller

chanhvinh.com

(2) Reception Using Interrupt-Driven Data Flow Control

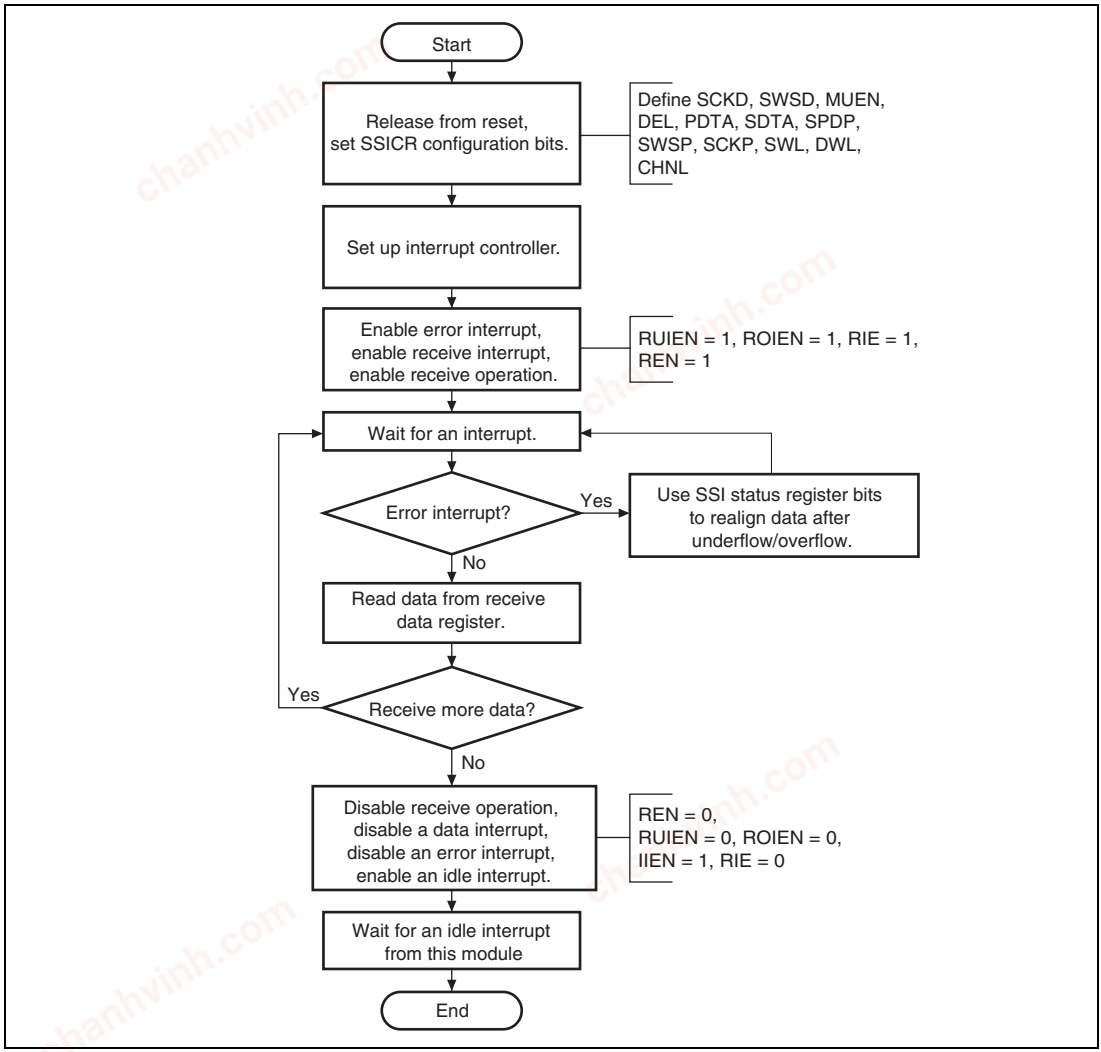

Figure 21.26 Reception Using Interrupt-Driven Data Flow Control

chanhvinh.com

When an underflow or overflow error condition has matched, this module can be recovered to the status before underflow or overflow condition match by using the TCHNO [1:0] and TSWNO bits in transmission and the RCHNO[1:0] and RSWNO bits in reception. When an underflow or overflow occurs, the host can read the channel number and system word number to determine what point the serial audio stream has reached. In the transmitter case, the host can skip forward through the data it wants to transmit until it finds the sample data that matches what this module is expecting to transmit next, and so resynchronize with the audio data stream. In the receiver case the host CPU can store null data to make the number of receive data items consistent until it is ready to store the sample data that this module is indicating will be received next, and so resynchronize with the audio data stream.

21.4.8 Serial Bit Clock Control

This function is used to control and select which clock is used for the serial bus interface.

If the serial clock direction is set to input (SCKD = 0), this module is in clock slave mode and the shift register uses the bit clock that was input to the SSISCK pin.

If the serial clock direction is set to output (SCKD = 1), this module is in clock master mode, and the shift register uses the oversampling clock or a divided oversampling clock as the bit clock. The oversampling clock is divided by the ratio specified by the serial oversampling clock division ratio bits (CKDV) in SSICR for use as the bit clock by the shift register.

In either case the module pin, SSISCK, is the same as the bit clock.

chanhvinh.com

21.5 Usage Notes

21.5.1 Limitations from Underflow or Overflow during DMA Operation

If an underflow or overflow occurs while the DMA is in operation, the module should be restarted. The transmit and receive buffers in the SSIF consists of 32-bit registers that share the L and R channels. Therefore, data to be transmitted and received at the L channel may sometimes be transmitted and received at the R channel if an underflow or overflow occurs, for example, under the following condition: the control register (SSICR) has a 32-bit setting for both data word length (DWL2 to DWL0) and system word length (SWL2 to SWL0).

If an error occurrence is confirmed with four types of error interrupts (transmit underflow, transmit overflow, receive underflow, and receive overflow) or the corresponding error status flag (the bits TUIRQ, TOIRQ, RUIRQ, and ROIRQ in SSISR), write 0 to the TEN or REN bit in SSICR to disable DMA transfer requests in this module, thus stopping the operation. (In this case, the direct memory access controller setting should also be stopped.) After this, write 0 to the error status flag bit to clear the error status, set the direct memory access controller again and restart the transfer.

21.5.2 Note on Changing Mode from Master Transceiver to Master Receiver

If a transmit underflow occurs in master transceiver mode while WS continue mode is disabled (SSITDMR.CONT = 0) and the TEN bit in SSICR is set to 0 in order to disable transmit operation, SSIWS output is broken. In order to receive seamlessly after changing mode to master receiver mode, write dummy data to SSITDR to suppress transmit underflow.

21.5.3 Limits on TDM mode and WS Continue Mode

If TDM mode or WS continue mode setting is changed, the operation of the SSISCK and SSIWS signals immediately after switching are not guaranteed. If it affects the device to be connected, do not change the setting dynamically.

chanhvinh.com

chanhvinh.com
chanhvinh.com
chanhvinh.com

chanhvinh.com

Section 22 Serial I/O with FIFO

This LSI includes a clock-synchronized serial I/O module with FIFO.

22.1 Features

- Serial transfer
  - 16-stage 32-bit FIFOs (independent transmission and reception)
  - Supports 8-bit monaural/16-bit monaural/16-bit stereo audio input and output
  - MSB first for data transmission
  - Supports a maximum of 48-kHz sampling rate
  - Synchronization by frame synchronization pulse
  - Connectable to linear, audio, or A-Law or μ-Law CODEC chip
  - Supports both master and slave modes
- Serial clock
  - AUDIO_CLK or AUDIO_X1 can be selected as the clock source.
- Interrupts: One type
- DMA transfer: Two types
  - Transmit FIFO transfer requests and receive FIFO transfer requests

chanhvinh.com

Figure 22.1 shows a block diagram.

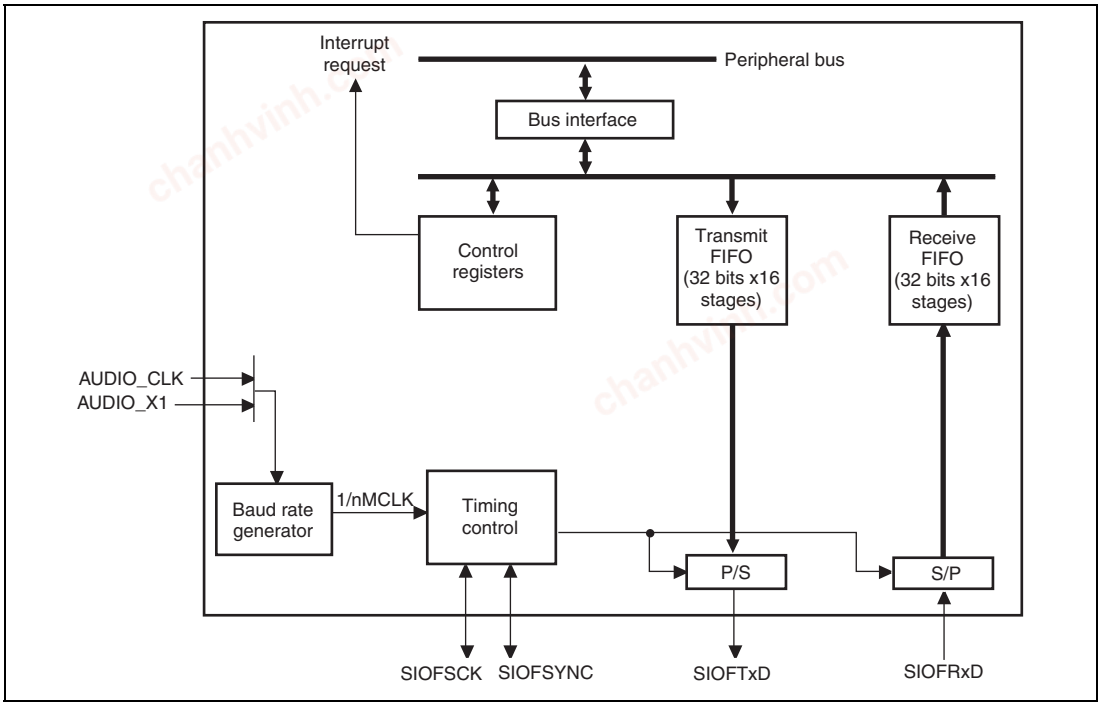

Figure 22.1 Block Diagram

chanhvinh.com

22.2 Input/Output Pins

Table 22.1 shows the pin configuration.

Table 22.1 Pin Configuration

Pin Name	I/O	Function
AUDIO_CLK	Input	External clock for audio
AUDIO_X1	Input	Crystal resonator/external clock for audio
AUDIO_X2	Output	
SIOFSCK	I/O	Serial clock (common to transmission/reception)
SIOFSYNC	I/O	Frame synchronous signal (common to transmission/reception)
SIOFTxD	Output	Transmit data
SIOFRxD	Input	Receive data

chanhvinh.com

22.3 Register Descriptions

Table 22.2 shows the register configuration.

Table 22.2 Register Configuration

Register Name	Abbreviation	R/W	Initial Value	Address	Access Size
Mode register	SIMDR	R/W	H'8000	H'FFFF4800	16
Clock select register	SISCR	R/W	H'8000	H'FFFF4802	16
Transmit data assign register	SITDAR	R/W	H'0000	H'FFFF4804	16
Receive data assign register	SIRDAR	R/W	H'0000	H'FFFF4806	16
Control register	SICTR	R/W	H'0000	H'FFFF480C	16
FIFO control register	SIFCTR	R/W*	H'1000	H'FFFF4810	16
Status register	SISTR	R/W*	H'0000	H'FFFF4814	16
Interrupt enable register	SIIER	R/W	H'0000	H'FFFF4816	16
Transmit data register	SITDR	W	Undefined	H'FFFF4820	8, 16, 32
Receive data register	SIRDR	R	Undefined	H'FFFF4824	8, 16, 32

Note: * This register has readable/writable bits and read-only bits. For details, see descriptions for each register.

chanhvinh.com

22.3.1 Mode Register (SIMDR)

SIMDR sets the operating mode for this module.

Bit:	15	14	13	12	11	10	9	8	7	6	5	4	3	2	1	0
	TRMD1	TRMD0	SYNCAT	REDG	FL3	FL2	FL1	FL0	TXDIZ	-	SYNCAC	SYNCDL	-	-	-	-
Initial Value:	1	0	0	0	0	0	0	0	0	0	0	0	0	0	0	0
R/W:	R/W	R/W	R/W	R/W	R/W	R/W	R/W	R/W	R/W	R	R/W	R/W	R	R	R	R

Bit	Bit Name	Initial Value	R/W	Description
15	TRMD1	1	R/W	Transfer Mode 1, 0
14	TRMD0	0	R/W	Select transfer mode. 00: Slave mode 01: Setting prohibited 10: Master mode 11: Setting prohibited
13	SYNCAT	0	R/W	SIOFSYNC Pin Valid Timing Indicates the position where the SIOFSYNC signal is output. This bit is valid in master mode. 0: At the start-bit data of frame 1: At the last-bit data of slot Note: If this bit is set to 1, make sure that valid data is transmitted/received or transmitted.
12	REDG	0	R/W	Receive Data Sampling Edge This bit is valid in master mode. 0: The SIOFRxD signal is sampled at the falling edge of SIOFSCK (The SIOFTxD signal is transmitted at the rising edge of SIOFSCK.) 1: The SIOFRxD signal is sampled at the rising edge of SIOFSCK (The SIOFTxD signal is transmitted at the falling edge of SIOFSCK.)

chanhvinh.com

Bit	Bit Name	Initial Value	R/W	Description
11	FL3	0	R/W	Frame Length 3 to 0
10	FL2	0	R/W	00xx: Data length is 8 bits and frame length is 8 bits.
9	FL1	0	R/W	0100: Data length is 8 bits and frame length is 16 bits.
8	FL0	0	R/W	0101: Data length is 8 bits and frame length is 32 bits. 0110: Data length is 8 bits and frame length is 64 bits. 0111: Data length is 8 bits and frame length is 128 bits. 10xx: Data length is 16 bits and frame length is 16 bits. 1100: Data length is 16 bits and frame length is 32 bits. 1101: Data length is 16 bits and frame length is 64 bits. 1110: Data length is 16 bits and frame length is 128 bits. 1111: Data length is 16 bits and frame length is 256 bits. Note: When data length is specified as 8 bits, control data cannot be transmitted or received. x: Don't care
7	TXDIZ	0	R/W	SIOFTxD Pin Output when Transmission is Invalid* 0: High output (1 output) when invalid 1: High-impedance state when invalid Note: Invalid means when disabled, and when a slot that is not assigned as transmit data or control data is being output.
6	—	0	R	Reserved This bit is always read as 0. The write value should always be 0.
5	SYNCAC	0	R/W	SIOFSYNC Pin Polarity This bit is valid in master mode. 0: Active-high 1: Active-low
4	SYNCDL	0	R/W	Data Pin Bit Delay for SIOFSYNC Pin Only 1-bit delay is valid in slave mode. 0: No bit delay 1: 1-bit delay
3 to 0	—	All 0	R	Reserved These bits are always read as 0. The write value should always be 0.

chanhvinh.com

22.3.2 Control Register (SICTR)

SICTR sets the operating state for this module.

Bit:	15	14	13	12	11	10	9	8	7	6	5	4	3	2	1	0
	SCKE	FSE	-	-	-	-	TXE	RXE	-	-	-	-	-	-	TXRST	RXRST
Initial Value:	0	0	0	0	0	0	0	0	0	0	0	0	0	0	0	0
R/W:	R/W	R/W	R	R	R	R	R/W	R/W	R	R	R	R	R	R	R/W	R/W

Bit	Bit Name	Initial Value	R/W	Description
15	SCKE	0	R/W	Serial Clock Output Enable This bit is valid in master mode. 0: Disables the SIOFSCK output (outputs 0) 1: Enables the SIOFSCK output • If this bit is set to 1, this module initializes the baud rate generator and initiates the operation. At the same time, the clock generated by the baud rate generator is output to the SIOFSCK pin.
14	FSE	0	R/W	Frame Synchronous Signal Output Enable This bit is valid in master mode. 0: Disables the SIOFSYNC output (outputs 0) 1: Enables the SIOFSYNC output • If this bit is set to 1, this module initializes the frame counter and initiates the operation.
13 to 10	—	All 0	R	Reserved These bits are always read as 0. The write value should always be 0.
9	TXE	0	R/W	Transmit Enable 0: Disables data transmission from the SIOFTxD pin 1: Enables data transmission from the SIOFTxD pin • This bit setting becomes valid at the start of the next frame (at the rising edge of the SIOFSYNC signal). • When the 1 setting for this bit becomes valid, this module issues a transmit transfer request according to the setting of the TFWM bit in SIFCTR. When transmit data is stored in the transmit FIFO, transmission of data from the SIOFTxD pin begins. • This bit is initialized upon a transmit reset.

chanhvinh.com

Bit	Bit Name	Initial Value	R/W	Description
8	RXE	0	R/W	Receive Enable 0: Disables data reception from SIOFRxD 1: Enables data reception from SIOFRxD • This bit setting becomes valid at the start of the next frame (at the rising edge of the SIOFSYNC signal). • When the 1 setting for this bit becomes valid, this module begins the reception of data from the SIOFRxD pin. When receive data is stored in the receive FIFO, a reception transfer request is issued according to the setting of the RFWM bit in SIFCTR. • This bit is initialized upon receive reset.
7 to 2	—	All 0	R	Reserved These bits are always read as 0. The write value should always be 0.
1	TXRST	0	R/W	Transmit Reset 0: Does not reset transmit operation 1: Resets transmit operation • This bit setting becomes valid immediately. This bit should be cleared to 0 before setting the register to be initialized. • When the 1 setting for this bit becomes valid, this module immediately sets the SIOFTxD pin output to 1, and initializes the following registers and data: — SITDR — Valid data in transmit FIFO — The TFEMP and TDREQ bits in SISTR — The TXE bit Note: Set this bit to 1 for more than one transfer clock period.

chanhvinh.com

Bit	Bit Name	Initial Value	R/W	Description
0	RXRST	0	R/W	Receive Reset 0: Does not reset receive operation 1: Resets receive operation • This bit setting becomes valid immediately. This bit should be cleared to 0 before setting the register to be initialized. • When the 1 setting for this bit becomes valid, this module immediately disables reception from the SIOFRxD pin, and initializes the following registers and data: — SIRDR — Valid data in receive FIFO — The RFFUL and RDREQ bits in SISTR — The RXE bit Note: Set this bit to 1 for more than one transfer clock period.

chanhvinh.com

22.3.3 Transmit Data Register (SITDR)

SITDR specifies transmit data. The data set in SITDR will be stored in the transmit FIFO.

SITDR is initialized by a transmit reset caused by the TXRST bit in SICTR.

Bit:	31	30	29	28	27	26	25	24	23	22	21	20	19	18	17	16
	SITDL[15:0]															
Initial Value:	Undefined	Undefined	Undefined	Undefined	Undefined	Undefined	Undefined	Undefined	Undefined	Undefined	Undefined	Undefined	Undefined	Undefined	Undefined	Undefined
R/W:	W	W	W	W	W	W	W	W	W	W	W	W	W	W	W	W
Bit:	15	14	13	12	11	10	9	8	7	6	5	4	3	2	1	0
	SITDR[15:0]															
Initial Value:	Undefined	Undefined	Undefined	Undefined	Undefined	Undefined	Undefined	Undefined	Undefined	Undefined	Undefined	Undefined	Undefined	Undefined	Undefined	Undefined
R/W:	W	W	W	W	W	W	W	W	W	W	W	W	W	W	W	W

Bit	Bit Name	Initial Value	R/W	Description
31 to 16	SITDL [15:0]	Undefined	W	Left-Channel Transmit Data Specify data to be transmitted from the SIOFTxD pin as left-channel data. The position of the left-channel data in the transmit frame is specified by the TDLA bit in SITDAR. • These bits are valid only when the TDLE bit in SITDAR is set to 1.
15 to 0	SITDR [15:0]	Undefined	W	Right-Channel Transmit Data Specify data to be transmitted from the SIOFTxD pin as right-channel data. The position of the right-channel data in the transmit frame is specified by the TDRA bit in SITDAR. • These bits are valid only when the TDRE bit is set to 1 and the TLREP bit is cleared to 0 in SITDAR.

chanhvinh.com

22.3.4 Receive Data Register (SIRDR)

SIRDR reads receive data of this module. SIRDR stores data in the receive FIFO.

SIRDR is initialized by a receive reset caused by the RXRST bit in SICTR.

Bit:	31	30	29	28	27	26	25	24	23	22	21	20	19	18	17	16
	SIRDL[15:0]															
Initial Value:	Undefined	Undefined	Undefined	Undefined	Undefined	Undefined	Undefined	Undefined	Undefined	Undefined	Undefined	Undefined	Undefined	Undefined	Undefined	Undefined
R/W:	R	R	R	R	R	R	R	R	R	R	R	R	R	R	R	R
Bit:	15	14	13	12	11	10	9	8	7	6	5	4	3	2	1	0
	SIRDR[15:0]															
Initial Value:	Undefined	Undefined	Undefined	Undefined	Undefined	Undefined	Undefined	Undefined	Undefined	Undefined	Undefined	Undefined	Undefined	Undefined	Undefined	Undefined
R/W:	R	R	R	R	R	R	R	R	R	R	R	R	R	R	R	R

Bit	Bit Name	Initial Value	R/W	Description
31 to 16	SIRDL [15:0]	Undefined	R	Left-Channel Receive Data Store data received from the SIOFRxD pin as left-channel data. The position of the left-channel data in the receive frame is specified by the RDLA bit in SIRDAR. • These bits are valid only when the RDLE bit in SIRDAR is set to 1.
15 to 0	SIRDR [15:0]	Undefined	R	Right-Channel Receive Data Store data received from the SIOFRxD pin as right-channel data. The position of the right-channel data in the receive frame is specified by the RDRA bit in SIRDAR. • These bits are valid only when the RDRE bit in SIRDAR is set to 1.

chanhvinh.com

22.3.5 Status Register (SISTR)

SISTR shows the state of this module. Each bit in this register becomes an interrupt source for this module when the corresponding bit in SIIER is set to 1.

SISTR is initialized in module stop mode.

Bit:	15	14	13	12	11	10	9	8	7	6	5	4	3	2	1	0
	-	-	TFEMP	TDREQ	-	-	RFFUL	RDREQ	-	-	-	FSERR	TFOVF	TFUDF	RFUDF	RFOVF
Initial Value:	0	0	0	0	0	0	0	0	0	0	0	0	0	0	0	0
R/W:	R	R	R	R	R	R	R	R	R	R	R	R/W	R/W	R/W	R/W	R/W

Bit	Bit Name	Initial Value	R/W	Description
15	—	0	R	Reserved This bit is always read as 0. The write value should always be 0.
14	—	0	R	Reserved The read value is undefined. The write value should always be 0.
13	TFEMP	0	R	Transmit FIFO Empty 0: Indicates that transmit FIFO is not empty 1: Indicates that transmit FIFO is empty • This bit is valid when the TXE bit in SICTR is 1. • If SITDR is written, this module clears this bit. Note: When this bit is set to 1, a transmit FIFO underflow may have occurred. Do not use this bit at the timing of writing to the transmit data register.

chanhvinh.com

Bit	Bit Name	Initial Value	R/W	Description
12	TDREQ	0	R	Transmit Data Transfer Request 0: Indicates that the size of empty space in the transmit FIFO is less than the size specified by the TFWM bit in SIFCTR. 1: Indicates that the size of empty space in the transmit FIFO is equal to or greater than the size specified by the TFWM bit in SIFCTR. A transmit data transfer request is issued when the empty space in the transmit FIFO exceeds the size specified by the TFWM bit in SIFCTR. When transmit data is transferred through the direct memory access controller, this bit is always cleared by an access of the direct memory access controller. If the condition for setting this bit is satisfied after the access of the direct memory access controller, this module again sets this bit to 1. • This bit is valid when the TXE bit in SICTR is 1. • If the size of empty space in the transmit FIFO is less than the size specified by the TFWM bit in SIFCTR, this module clears this bit.
11, 10	—	All 0	R	Reserved These bits are always read as 0. The write value should always be 0.
9	RFFUL	0	R	Receive FIFO Full 0: Receive FIFO not full 1: Receive FIFO full • This bit is valid when the RXE bit in SICTR is 1. • If SIRDR is read, this module clears this bit.

chanhvinh.com

Bit	Bit Name	Initial Value	R/W	Description
8	RDREQ	0	R	Receive Data Transfer Request 0: Indicates that the size of valid space in the receive FIFO is less than the size specified by the RFWM bit in SIFCTR. 1: Indicates that the size of valid space in the receive FIFO is equal to or greater than the size specified by the RFWM bit in SIFCTR. A receive data transfer request is issued when the valid space in the receive FIFO exceeds the size specified by the RFWM bit in SIFCTR. When receive data is transferred through the direct memory access controller, this bit is always cleared by an access of the direct memory access controller. If the condition for setting this bit is satisfied after the access of the direct memory access controller, this module again sets this bit to 1. • This bit is valid when the RXE bit in SICTR is 1. • If the size of valid space in the receive FIFO is less than the size specified by the RFWM bit in SIFCTR, this module clears this bit.
7 to 5	—	All 0	R	Reserved These bits are always read as 0. The write value should always be 0.
4	FSERR	0	R/W	Frame Synchronization Error 0: Indicates that no frame synchronization error occurs 1: Indicates that a frame synchronization error occurs A frame synchronization error occurs when the next frame synchronization timing appears before the previous data transfer has been completed. If a frame synchronization error occurs, this module performs transmission or reception for slots that can be transferred. • This bit is valid when the TXE or RXE bit in SICTR is 1. • When this bit is set to 1, it is cleared to 0 by this module. Writing 0 to this bit is invalid.

chanhvinh.com

Bit	Bit Name	Initial Value	R/W	Description
3	TFOVF	0	R/W	Transmit FIFO Overflow 0: No transmit FIFO overflow 1: Transmit FIFO overflow A transmit FIFO overflow means that there has been an attempt to write to SITDR when the transmit FIFO is full. When an overflow of the transmit FIFO occurs, the write which caused the overflow is invalid. • This bit is valid when the TXE bit in SICTR is 1. • When this bit is set to 1, it is cleared to 0 by this module. Writing 0 to this bit is invalid.
2	TFUDF	0	R/W	Transmit FIFO Underflow 0: No transmit FIFO underflow 1: Transmit FIFO underflow A transmit FIFO underflow means that loading for transmission has occurred when the transmit FIFO is empty. When a transmit FIFO underflow occurs, this module repeatedly sends the previous transmit data. • This bit is valid when the TXE bit in SICTR is 1. • When this bit is set to 1, it is cleared to 0 by this module. Writing 0 to this bit is invalid.
1	RFUDF	0	R/W	Receive FIFO Underflow 0: No receive FIFO underflow 1: Receive FIFO underflow A receive FIFO underflow means that reading of SIRDR has occurred when the receive FIFO is empty. When a receive FIFO underflow occurs, the value of data read from SIRDR is not guaranteed. • This bit is valid when the RXE bit in SICTR is 1. • When this bit is set to 1, it is cleared to 0 by this module. Writing 0 to this bit is invalid.

chanhvinh.com

Bit	Bit Name	Initial Value	R/W	Description
0	RFOVF	0	R/W	Receive FIFO Overflow 0: No receive FIFO overflow 1: Receive FIFO overflow A receive FIFO overflow means that writing has occurred due to reception operation when the receive FIFO is full. When an overflow of the receive FIFO occurs, the receive data which caused the overflow is lost. • When this bit is set to 1, it is cleared to 0 by this module. Writing 0 to this bit is invalid.

chanhvinh.com

22.3.6 Interrupt Enable Register (SIIER)

SIIER enables the issue of interrupts from this module. When a bit in this register is set to 1 and the corresponding bit in SISTR is set to 1, this module issues an interrupt.

Bit:	15	14	13	12	11	10	9	8	7	6	5	4	3	2	1	0
	TDMAE	-	TFEMPE	TDREQE	RDMAE	-	RFFULE	RDREQE	-	-	-	FSERRE	TFOVFE	TFUDFE	RFUDFE	RFOVFE
Initial Value:	0	0	0	0	0	0	0	0	0	0	0	0	0	0	0	0
R/W:	R/W	R	R/W	R/W	R/W	R	R/W	R/W	R	R	R	R/W	R/W	R/W	R/W	R/W

Bit	Bit Name	Initial Value	R/W	Description
15	TDMAE	0	R/W	Transmit FIFO DMA Transfer Request Enable Uses a transmit FIFO transfer request as an interrupt or a DMA transfer request. 0: Used as an interrupt to the CPU 1: Used as a DMA transfer request to the direct memory access controller
14	—	0	R	Reserved This bit is always read as 0. The write value should always be 0.
13	TFEMPE	0	R/W	Transmit FIFO Empty Enable 0: Disables interrupts due to transmit FIFO empty 1: Enables interrupts due to transmit FIFO empty
12	TDREQE	0	R/W	Transmit FIFO Transfer Request Enable 0: Disables interrupts/DMA transfer requests due to transmit FIFO transfer requests 1: Enables interrupts/DMA transfer requests due to transmit FIFO transfer requests
11	RDMAE	0	R/W	Receive FIFO DMA Transfer Request Enable Uses a receive FIFO transfer request as an interrupt or a DMA transfer request. 0: Used as a CPU interrupt 1: Used as a DMA transfer request to the direct memory access controller
10	—	0	R	Reserved This bit is always read as 0. The write value should always be 0.

chanhvinh.com

Bit	Bit Name	Initial Value	R/W	Description
9	RFFULE	0	R/W	Receive FIFO Full Enable 0: Disables interrupts due to receive FIFO full 1: Enables interrupts due to receive FIFO full
8	RDREQE	0	R/W	Receive FIFO Transfer Request Enable 0: Disables interrupts/DMA transfer requests due to receive FIFO transfer requests 1: Enables interrupts/DMA transfer requests due to receive FIFO transfer requests
7 to 5	—	All 0	R	Reserved These bits are always read as 0. The write value should always be 0.
4	FSERRE	0	R/W	Frame Synchronization Error Enable 0: Disables interrupts due to frame synchronization error 1: Enables interrupts due to frame synchronization error
3	TFOVFE	0	R/W	Transmit FIFO Overflow Enable 0: Disables interrupts due to transmit FIFO overflow 1: Enables interrupts due to transmit FIFO overflow
2	TFUDFE	0	R/W	Transmit FIFO Underflow Enable 0: Disables interrupts due to transmit FIFO underflow 1: Enables interrupts due to transmit FIFO underflow
1	RFUDFE	0	R/W	Receive FIFO Underflow Enable 0: Disables interrupts due to receive FIFO underflow 1: Enables interrupts due to receive FIFO underflow
0	RFOVFE	0	R/W	Receive FIFO Overflow Enable 0: Disables interrupts due to receive FIFO overflow 1: Enables interrupts due to receive FIFO overflow

chanhvinh.com

22.3.7 FIFO Control Register (SIFCTR)

SIFCTR indicates the area available for the transmit/receive FIFO transfer.

Bit:	15	14	13	12	11	10	9	8	7	6	5	4	3	2	1	0
	TFWM2	TFWM1	TFWM0	TFUA4	TFUA3	TFUA2	TFUA1	TFUA0	RFWM2	RFWM1	RFWM0	RFUA4	RFUA3	RFUA2	RFUA1	RFUA0
Initial Value:	0	0	0	1	0	0	0	0	0	0	0	0	0	0	0	0
R/W:	R/W	R/W	R/W	R	R	R	R	R	R/W	R/W	R/W	R	R	R	R	R

Bit	Bit Name	Initial Value	R/W	Description
15	TFWM2	0	R/W	Transmit FIFO Watermark
14	TFWM1	0	R/W	000: Issue a transfer request when 16 stages of the transmit FIFO are empty.
13	TFWM0	0	R/W	001: Setting prohibited 010: Setting prohibited 011: Setting prohibited 100: Issue a transfer request when 12 or more stages of the transmit FIFO are empty. 101: Issue a transfer request when 8 or more stages of the transmit FIFO are empty. 110: Issue a transfer request when 4 or more stages of the transmit FIFO are empty. 111: Issue a transfer request when 1 or more stages of transmit FIFO are empty. • A transfer request to the transmit FIFO is issued by the TDREQE bit in SISTR. • The transmit FIFO is always used as 16 stages of the FIFO regardless of these bit settings.
12	TFUA4	1	R	Transmit FIFO Usable Area
11	TFUA3	0	R	Indicate the number of stages of FIFO that can be transferred as B'00000 (full) to B'10000 (empty).
10	TFUA2	0	R	
9	TFUA1	0	R	
8	TFUA0	0	R	

chanhvinh.com

Bit	Bit Name	Initial Value	R/W	Description
7	RFWM2	0	R/W	Receive FIFO Watermark
6	RFWM1	0	R/W	000: Issue a transfer request when 1 stage or more of the receive FIFO are valid.
5	RFWM0	0	R/W	001: Setting prohibited 010: Setting prohibited 011: Setting prohibited 100: Issue a transfer request when 4 or more stages of the receive FIFO are valid. 101: Issue a transfer request when 8 or more stages of the receive FIFO are valid. 110: Issue a transfer request when 12 or more stages of the receive FIFO are valid. 111: Issue a transfer request when 16 stages of the receive FIFO are valid. • A transfer request to the receive FIFO is issued by the RDREQE bit in SISTR. • The receive FIFO is always used as 16 stages of the FIFO regardless of these bit settings.
4	RFUA4	0	R	Receive FIFO Usable Area
3	RFUA3	0	R	Indicate the number of stages of FIFO that can be transferred as B'00000 (empty) to B'10000 (full).
2	RFUA2	0	R	
1	RFUA1	0	R	
0	RFUA0	0	R	

chanhvinh.com

22.3.8 Clock Select Register (SISCR)

SISCR sets the serial clock generation conditions for the master clock. SISCR can be specified when the TRMD1 and TRMD0 bits in SIMDR are specified as B'10.

Bit:	15	14	13	12	11	10	9	8	7	6	5	4	3	2	1	0
	MSSEL	-	-	BRPS4	BRPS3	BRPS2	BRPS1	BRPS0	-	-	-	-	-	BRDV2	BRDV1	BRDV0
Initial Value:	1	0	0	0	0	0	0	0	0	0	0	0	0	0	0	0
R/W:	R/W	R	R	R/W	R/W	R/W	R/W	R/W	R	R	R	R	R	R/W	R/W	R/W

Bit	Bit Name	Initial Value	R/W	Description
15	MSSEL	1	R/W	Master Clock Source Selection 0: Uses AUDIO_X1 as the master clock 1: Uses AUDIO_CLK as the master clock The master clock is the clock input to the baud rate generator.
14, 13	—	All 0	R	Reserved These bits are always read as 0. The write value should always be 0.
12	BRPS4	0	R/W	Prescalar Setting Set the master clock division ratio according to the count value of the prescalar of the baud rate generator. The range of settings is from B'00000 (× 1/1) to B'11111 (× 1/32).
11	BRPS3	0	R/W	
10	BRPS2	0	R/W	
9	BRPS1	0	R/W	
8	BRPS0	0	R/W	
7 to 3	—	All 0	R	Reserved These bits are always read as 0. The write value should always be 0.

chanhvinh.com

Bit	Bit Name	Initial Value	R/W	Description
2	BRDV2	0	R/W	Baud rate generator's Division Ratio Setting
1	BRDV1	0	R/W	Set the frequency division ratio for the output stage of the baud rate generator.
0	BRDV0	0	R/W	000: Prescalar output × 1/2 001: Prescalar output × 1/4 010: Prescalar output × 1/8 011: Prescalar output × 1/16 100: Prescalar output × 1/32 101: Setting prohibited 110: Setting prohibited 111: Setting prohibited The final frequency division ratio of the baud rate generator is determined by BRPS × BRDV (maximum 1/1024).

22.3.9 Transmit Data Assign Register (SITDAR)

SITDAR specifies the position of the transmit data in a frame (slot number).

Bit:	15	14	13	12	11	10	9	8	7	6	5	4	3	2	1	0
	TDLE	-	-	-	TDLA3	TDLA2	TDLA1	TDLA0	TDRE	TLREP	-	-	TDRA3	TDRA2	TDRA1	TDRA0
Initial Value:	0	0	0	0	0	0	0	0	0	0	0	0	0	0	0	0
R/W:	R/W	R	R	R	R/W	R/W	R/W	R/W	R/W	R/W	R	R	R/W	R/W	R/W	R/W

Bit	Bit Name	Initial Value	R/W	Description
15	TDLE	0	R/W	Transmit Left-Channel Data Enable 0: Disables left-channel data transmission 1: Enables left-channel data transmission
14 to 12	—	All 0	R	Reserved These bits are always read as 0. The write value should always be 0.

chanhvinh.com

Bit	Bit Name	Initial Value	R/W	Description
11	TDLA3	0	R/W	Transmit Left-Channel Data Assigns 3 to 0
10	TDLA2	0	R/W	Specify the position of left-channel data in a transmit frame as B'0000 (0) to B'1110 (14).
9	TDLA1	0	R/W	1111: Setting prohibited
8	TDLA0	0	R/W	• Transmit data for the left channel is specified in the SITDL bit in SITDR.
7	TDRE	0	R/W	Transmit Right-Channel Data Enable 0: Disables right-channel data transmission 1: Enables right-channel data transmission
6	TLREP	0	R/W	Transmit Left-Channel Repeat 0: Transmits data specified in the SITDR bit in SITDR as right-channel data 1: Repeatedly transmits data specified in the SITDL bit in SITDR as right-channel data • This bit setting is valid when the TDRE bit is set to 1. • When this bit is set to 1, the SITDR settings are ignored.
5, 4	—	All 0	R	Reserved These bits are always read as 0. The write value should always be 0.
3	TDRA3	0	R/W	Transmit Right-Channel Data Assigns 3 to 0
2	TDRA2	0	R/W	Specify the position of right-channel data in a transmit frame as B'0000 (0) to B'1110 (14).
1	TDRA1	0	R/W	1111: Setting prohibited
0	TDRA0	0	R/W	• Transmit data for the right channel is specified in the SITDR bit in SITDR.

chanhvinh.com

22.3.10 Receive Data Assign Register (SIRDAR)

SIRDAR specifies the position of the receive data in a frame (slot number).

Bit:	15	14	13	12	11	10	9	8	7	6	5	4	3	2	1	0
	RDLE	-	-	-	RDLA3	RDLA2	RDLA1	RDLA0	RDRE	-	-	-	RDRA3	RDRA2	RDRA1	RDRA0
Initial Value:	0	0	0	0	0	0	0	0	0	0	0	0	0	0	0	0
R/W:	R/W	R	R	R	R/W	R/W	R/W	R/W	R/W	R	R	R	R/W	R/W	R/W	R/W

Bit	Bit Name	Initial Value	R/W	Description
15	RDLE	0	R/W	Receive Left-Channel Data Enable 0: Disables left-channel data reception 1: Enables left-channel data reception
14 to 12	—	All 0	R	Reserved These bits are always read as 0. The write value should always be 0.
11	RDLA3	0	R/W	Receive Left-Channel Data Assigns 3 to 0 Specify the position of left-channel data in a receive frame as B'0000 (0) to B'1110 (14). 1111: Setting prohibited • Receive data for the left channel is stored in the SIRDL bit in SIRDR.
10	RDLA2	0	R/W	
9	RDLA1	0	R/W	
8	RDLA0	0	R/W	
7	RDRE	0	R/W	Receive Right-Channel Data Enable 0: Disables right-channel data reception 1: Enables right-channel data reception
6 to 4	—	All 0	R	Reserved These bits are always read as 0. The write value should always be 0.
3	RDRA3	0	R/W	Receive Right-Channel Data Assigns 3 to 0 Specify the position of right-channel data in a receive frame as B'0000 (0) to B'1110 (14). 1111: Setting prohibited • Receive data for the right channel is stored in the SIRDR bit in SIRDR.
2	RDRA2	0	R/W	
1	RDRA1	0	R/W	
0	RDRA0	0	R/W	

chanhvinh.com

22.4 Operation

22.4.1 Serial Clocks

(1) Master/Slave Modes

The following two modes are available as a clock mode for this module.

- Slave mode: SIOFSCK, SIOFSYNC input
- Master mode: SIOFSCK, SIOFSYNC output

(2) Baud Rate Generator: In master mode, the baud rate generator (BRG) is used to generate the serial clock. The division ratio is from 1/2 to 1/1024.

Figure 22.2 shows connections for supply of the serial clock.

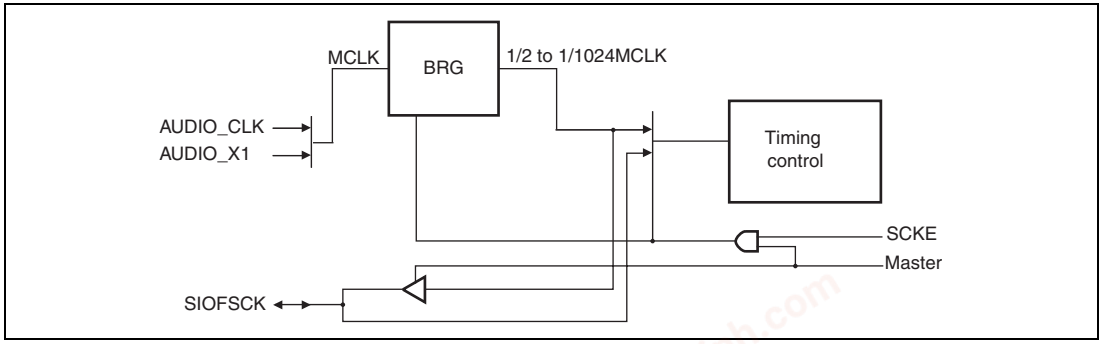

Figure 22.2 Serial Clock Supply

Table 22.3 shows an example of serial clock frequency.

Table 22.3 Serial Clock Frequency

	Sampling Rate		
Frame Length	**8 kHz**	**44.1 kHz**	**48 kHz**
32 bits	256 kHz	1.4112 MHz	1.536 MHz
64 bits	512 kHz	2.8224 MHz	3.072 MHz
128 bits	1.024 MHz	5.6448 MHz	6.144 MHz
256 bits	2.048 MHz	11.289 MHz	12.289 MHz

chanhvinh.com

22.4.2 Serial Timing

(1) SIOFSYNC

The SIOFSYNC is a frame synchronous signal.

Figure 22.3 shows the SIOFSYNC synchronization timing.

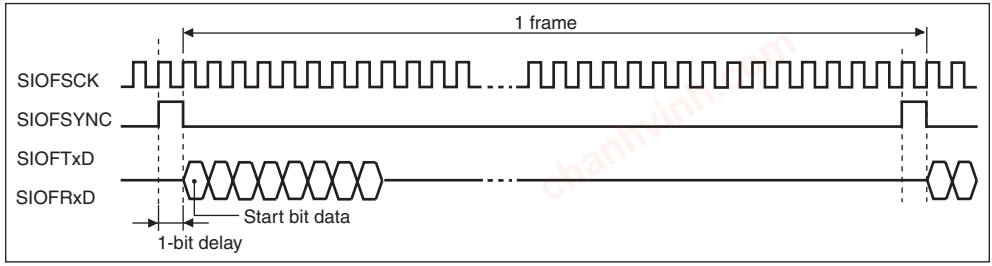

Figure 22.3 Serial Data Synchronization Timing

chanhvinh.com

(2) Transmit/Receive Timing

The SIOFTxD transmit timing and SIOFRxD receive timing relative to the SIOFSCK can be set as the sampling timing in the following ways. The transmit/receive timing is set using the REDG bit in SIMDR.

- Falling-edge sampling
- Rising-edge sampling (possible only in master mode)

Figure 22.4 shows the transmit/receive timing.

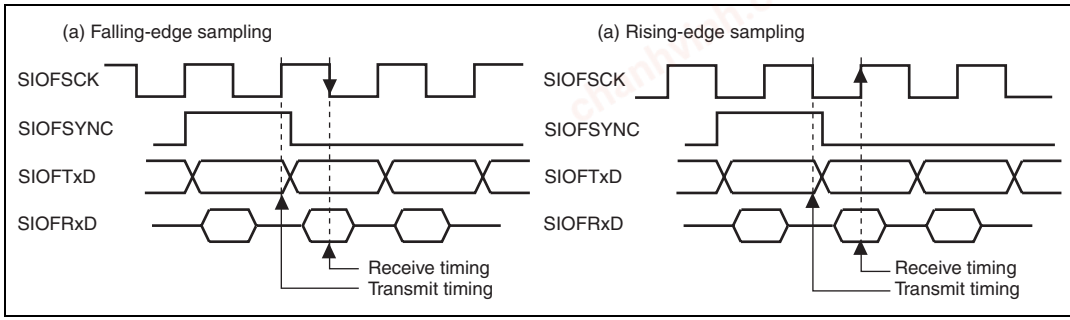

Figure 22.4 Transmit/Receive Timing

22.4.3 Transfer Data Format

This module performs the following transfer.

- Transmit/receive data: Transfer of 8-bit monaural/16-bit monaural/16-bit stereo data

(1) Transfer Mode

This module supports the following two transfer modes as listed in table 22.4. The transfer mode can be specified by the TRMD1 and TRMD0 bits in SIMDR.

Table 22.4 Serial Transfer Modes

Transfer Mode	SIOFSYNC	Bit Delay
Slave mode	Synchronous pulse	SYNCDL bit
Master mode		

chanhvinh.com

(2) Frame Length

The length of the frame to be transferred by this module is specified with the FL3 to FL0 bits in SIMDR. Table 22.5 shows the relationship between the FL3 to FL0 bit settings and frame length.

Table 22.5 Frame Length

FL3 to FL0	Slot Length	Number of Bits in a Frame	Transfer Data
00xx	8	8	8-bit monaural data
0100	8	16	8-bit monaural data
0101	8	32	8-bit monaural data
0110	8	64	8-bit monaural data
0111	8	128	8-bit monaural data
10xx	16	16	16-bit monaural data
1100	16	32	16-bit monaural/stereo data
1101	16	64	16-bit monaural/stereo data
1110	16	128	16-bit monaural/stereo data
1111	16	256	16-bit monaural/stereo data

Note: x: Don't care.

(3) Slot Position

This module can specify the position of transmit data and receive data in a frame by slot numbers. The slot number of each data is specified by the following registers.

- Transmit data: SITDAR
- Receive data: SIRDAR

22.4.4 Register Allocation of Transfer Data

Writing and reading of transmit/receive data is performed for the following registers.

- Transmit data writing: SITDR (8-, 16-, or 32-bit access)
- Receive data reading: SIRDR (8-, 16-, or 32-bit access)

Figure 22.5 shows the transmit/receive data and the SITDR and SIRDR bit alignment.

chanhvinh.com

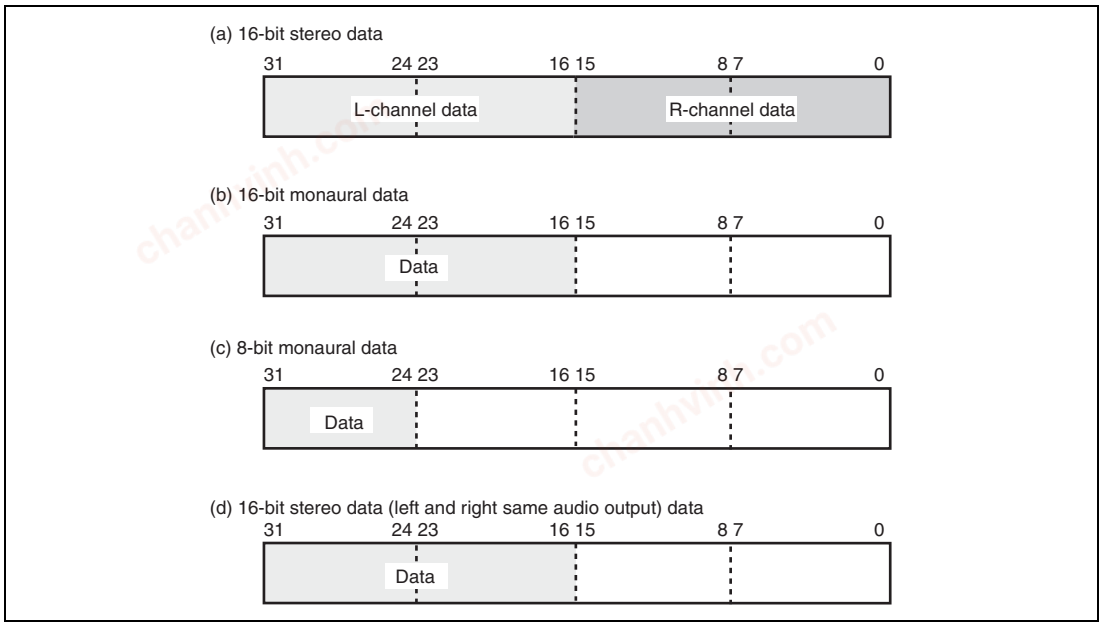

Figure 22.5 Transmit/Receive Data Bit Alignment

Note: In the figure, only the shaded areas are transmitted or received as valid data. Data in unshaded areas is not transmitted or received.

Monaural or stereo can be specified for transmit data by the TDLE bit and TDRE bit in SITDAR. Monaural or stereo can be specified for receive data by the RDLE bit and RDRE bit in SIRDAR. To achieve left and right same audio output while stereo is specified for transmit data, specify the TLREP bit in SITDAR. Tables 22.6 and 22.7 show the audio mode specifications for transmit data and that for receive data, respectively.

Table 22.6 Audio Mode Specification for Transmit Data

	Bit		
Mode	**TDLE**	**TDRE**	**TLREP**
Monaural	1	0	x
Stereo	1	1	0
Left and right same audio output	1	1	1

Note: x: Don't care

chanhvinh.com

Table 22.7 Audio Mode Specification for Receive Data

	Bit	
Mode	**RDLE**	**RDRE**
Monaural	1	0
Stereo	1	1

Note: Left and right same audio mode is not supported in receive data.
To execute monaural transmission or reception, use the left channel.

22.4.5 FIFO

(1) Overview

The transmit and receive FIFOs of this module have the following features.

- 16-stage 32-bit FIFOs for transmission and reception
- One FIFO buffer stage is used regardless of the access size. (One-stage 32-bit FIFO access cannot be divided into multiple accesses.)

(2) Transfer Request

The following FIFO transfer requests can be issued to the CPU or direct memory access controller.

- Transmit request: TDREQ (transmit FIFO transfer request)
- Receive request: RDREQ (receive FIFO transfer request)

The conditions to issue the transmit/receive FIFO transfer requests can be specified individually. The transmit request condition is specified with the TFWM2 to TFWM0 bits in SIFCTR, and the receive FIFO transfer request is specified with the RFWM2 to RFWM0 bits in SIFCTR. Tables 22.8 and 22.9 summarize the conditions specified by SIFCTR.

chanhvinh.com

Table 22.8 Conditions to Issue Transmit Request

TFWM2 to TFWM0	Number of Requested Stages	Transmit Request Issued	Used Areas
000	1	There are sixteen stages of empty area.	Smallest
100	4	There are twelve or more stages of empty area.	↕
101	8	There are eight or more stages of empty area.	
110	12	There are four or more stages of empty area.	
111	16	There is one or more stage of empty area.	Largest

Table 22.9 Conditions to Issue Receive Request

RFWM2 to RFWM0	Number of Requested Stages	Receive Request Issued	Used Areas
000	1	There is one or more stage of valid data.	Smallest
100	4	There are four stages of valid data or more.	↕
101	8	There are eight stages of valid data or more.	
110	12	There are twelve stages of valid data or more.	
111	16	There are sixteen stages of valid data.	Largest

The number of stages of the FIFO is sixteen. Accordingly, an overflow error or underflow error occurs if data area or empty area exceeds sixteen FIFO stages. The transfer request is canceled when the above condition is not satisfied even if the FIFO is not empty or full.

(3) Number of FIFOs

The usage state of the transmit FIFO and receive FIFO are indicated by the TFUA and FRUA bits in the FIFO control register as below:

- Transmit FIFO: The number of empty FIFO stages is indicated by the TFUA4 to TFUA0 bits in SIFCTR.
- Receive FIFO: The number of valid data stages is indicated by the RFUA4 to RFUA0 bits in SIFCTR.

The above register contents indicate the possible data numbers that can be transferred by the CPU or direct memory access controller.

chanhvinh.com

22.4.6 Transmit and Receive Procedures

(1) Transmission in Master Mode

Figure 22.6 shows an example of transmission settings and operation when this module is used as a master.

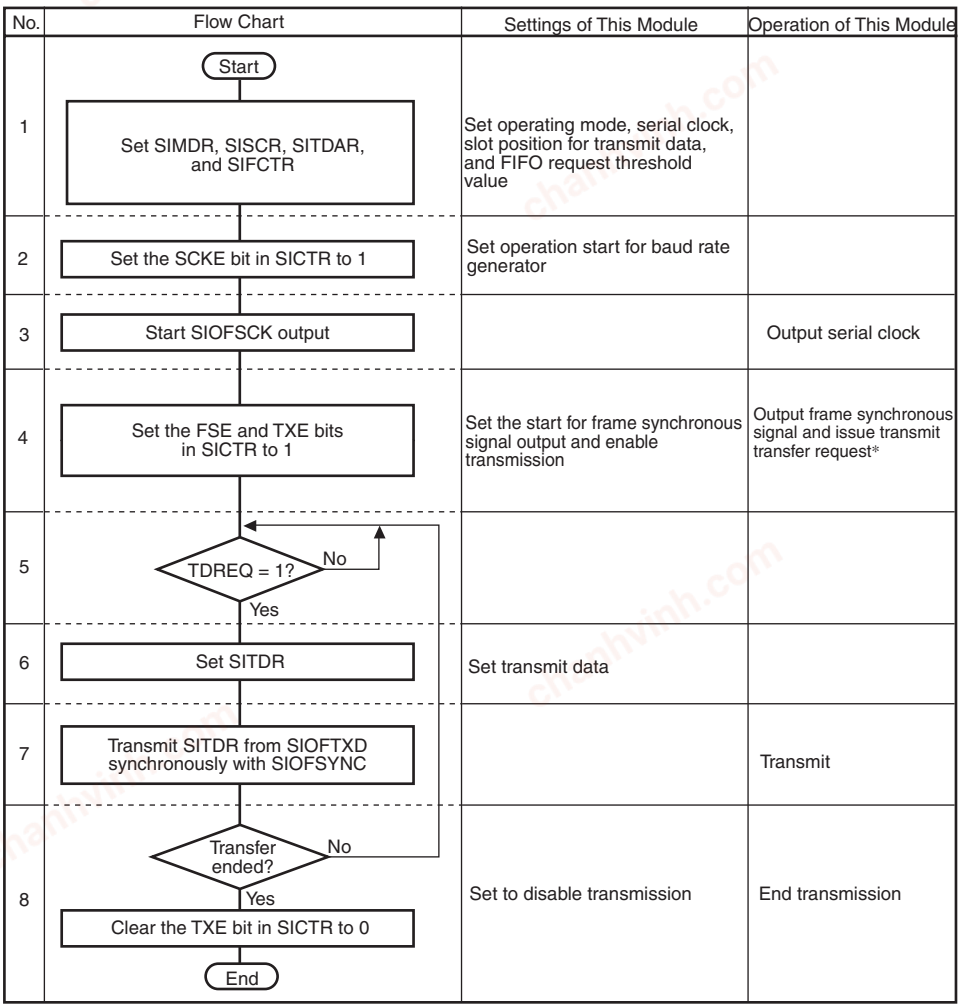

Note: * To avoid occurrence of a transmit data underflow, the TXE bit should be set to 1 after setting the no. 6 transmit data,

Figure 22.6 Example of Transmit Operation in Master Mode

chanhvinh.com

(2) Reception in Master Mode

Figure 22.7 shows an example of reception settings and operation when this module is used as a master.

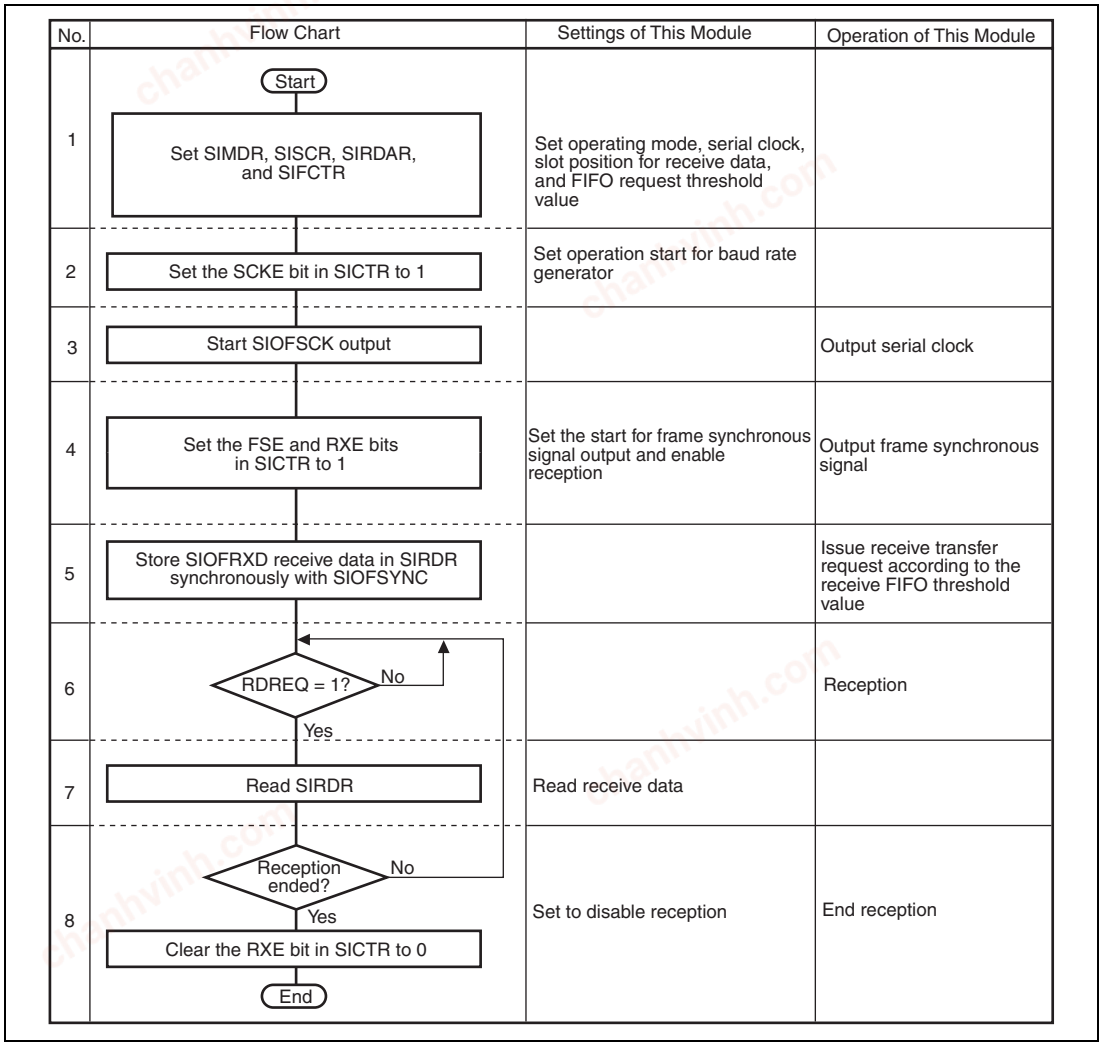

Figure 22.7 Example of Receive Operation in Master Mode

chanhvinh.com

(3) Transmission in Slave Mode

Figure 22.8 shows an example of transmission settings and operation for when this module is used as a slave.

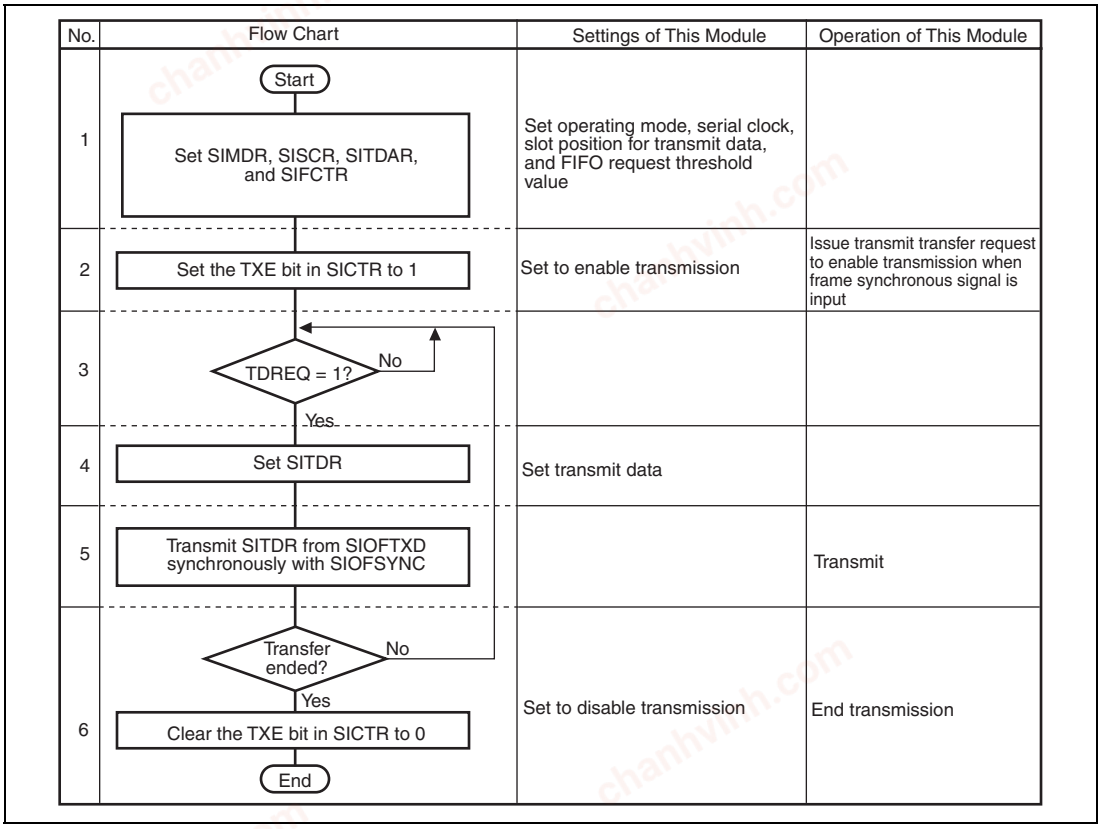

Figure 22.8 Example of Transmit Operation in Slave Mode

chanhvinh.com

(4) Reception in Slave Mode

Figure 22.9 shows an example of reception settings and operation when this module is used as a slave.

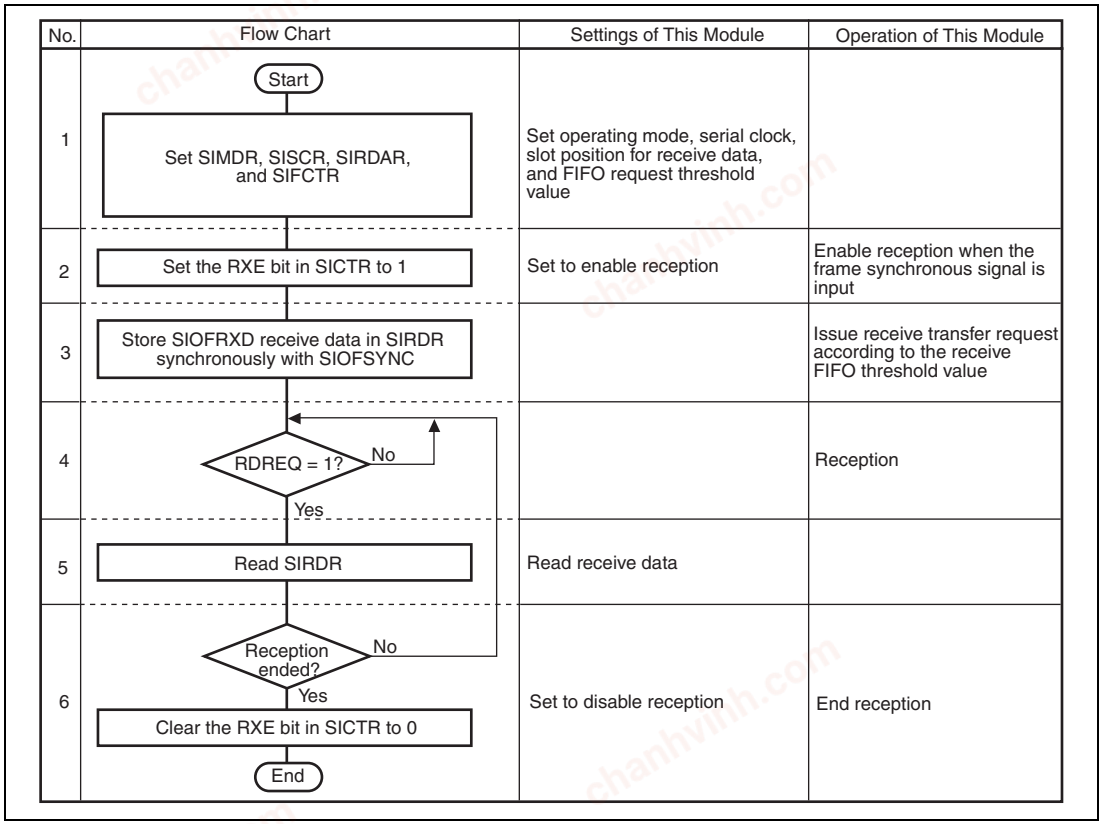

Figure 22.9 Example of Receive Operation in Slave Mode

chanhvinh.com

(5) Transmit/Receive Reset

This module can separately reset the transmit and receive units by setting the following bits to 1.

- Transmit reset: TXRST bit in SICTR
- Receive reset: RXRST bit in SICTR

Table 22.10 shows the details of initialization upon the transmit or receive reset.

Table 22.10 Transmit and Receive Reset

Type	Objects Initialized
Transmit reset	SITDR
	Valid data in transmit FIFO
	The TFEMP and TDREQ bits in SISTR
	The TXE bit in SICTR
Receive reset	SIRDR
	Valid data in receive FIFO
	The RFFUL and RDREQ bits in SISTR
	The RXE bit in SICTR

chanhvinh.com

22.4.7 Interrupts

This module has one type of interrupt.

(1) Interrupt Requests

Interrupts can be issued by several requests. Each source is shown as an status in SISTR. Table 22.11 lists the interrupt requests.

Table 22.11 Interrupt Requests

No.	Classification	Bit Name	Function Name	Description
1	Transmission	TDREQ	Transmit FIFO transfer request	The transmit FIFO stores data of specified size or more.
2		TFEMP	Transmit FIFO empty	The transmit FIFO is empty.
3	Reception	RDREQ	Receive FIFO transfer request	The receive FIFO stores data of specified size or more.
4		RFFUL	Receive FIFO full	The receive FIFO is full.
5	Error	TFUDF	Transmit FIFO underflow	Serial data transmit timing has arrived while the transmit FIFO is empty.
6		TFOVF	Transmit FIFO overflow	Write to the transmit FIFO is performed while the transmit FIFO is full.
7		RFOVF	Receive FIFO overflow	Serial data is received while the receive FIFO is full.
8		RFUDF	Receive FIFO underflow	The receive FIFO is read while the receive FIFO is empty.
9		FSERR	FS error	A synchronous signal is input before the specified bit number has been passed (in slave mode).

Whether the interrupt is issued or not by the request is determined by the SIIER settings. If an interrupt request is generated when the corresponding bit in SIIER is set to 1, this module issues the interrupt.

chanhvinh.com

(2) Regarding Transmit and Receive Classification

The transmit request and receive request are signals indicating the state; after being set, if the state of the transmit/receive FIFO changes, they are automatically cleared by this module.

When the DMA transfer is used, the signal is cleared to 0 by the direct memory access controller. If the setting condition is still satisfied after the access using the direct memory access controller, it is set to 1 again.

(3) Processing when Errors Occur

On occurrence of each of the errors indicated as a status in SISTR, this module performs the following operations.

- Transmit FIFO underflow (TFUDF)
  The immediately preceding transmit data is again transmitted.
- Transmit FIFO overflow (TFOVF)
  The contents of the transmit FIFO are protected, and the write operation causing the overflow is ignored.
- Receive FIFO overflow (RFOVF)
  Data causing the overflow is discarded and lost.
- Receive FIFO underflow (RFUDF)
  The read value is undefined.
- FS error (FSERR)
  The internal counter is reset according to the sync signal in which an error occurs.

chanhvinh.com

22.4.8 Transmit and Receive Timing

Examples of serial transmission and reception with this module are shown in figures 22.10 to 22.15.

(1) 8-bit Monaural Data (1)

Falling edge sampling, slot No.0 used for transmit and receive data, an frame length = 8 bits

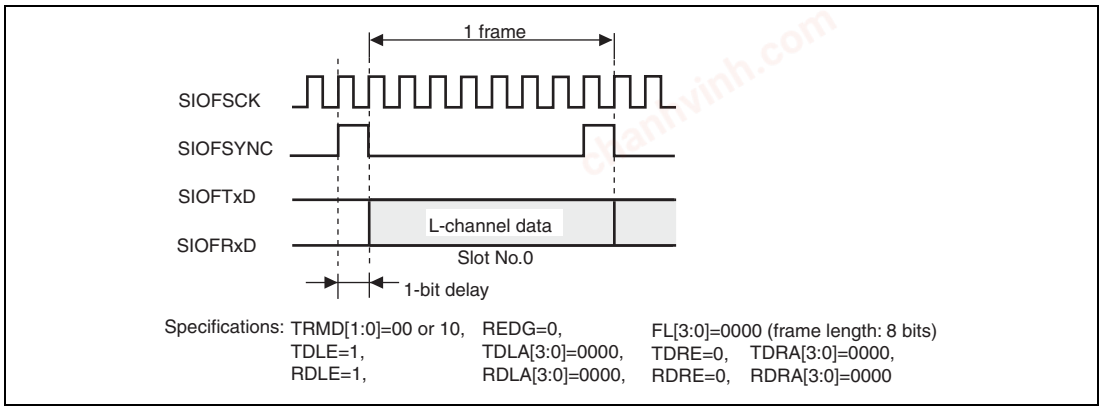

Figure 22.10 Transmit and Receive Timing (8-Bit Monaural Data (1))

(2) 8-bit Monaural Data (2)

Falling edge sampling, slot No.0 used for transmit and receive data, and frame length = 16 bits

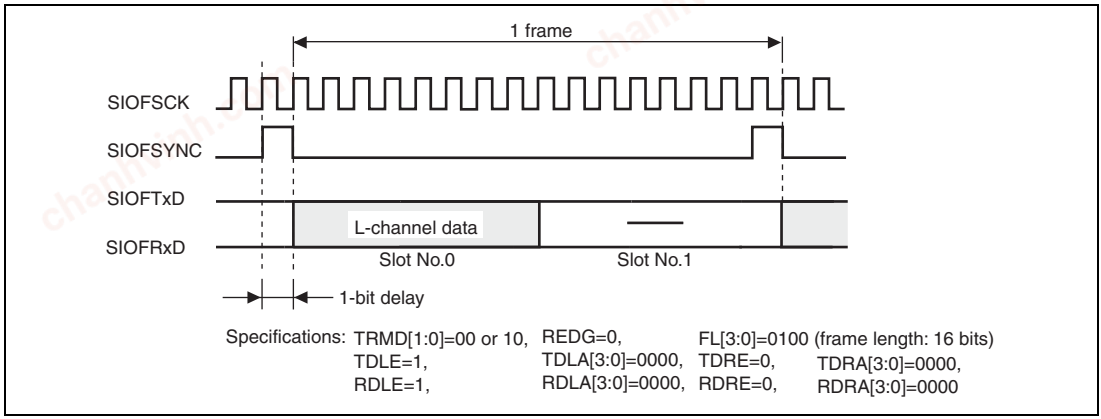

Figure 22.11 Transmit and Receive Timing (8-Bit Monaural Data (2))

chanhvinh.com

(3) 16-bit Monaural Data

Falling edge sampling, slot No.0 used for transmit and receive data, and frame length = 64 bits

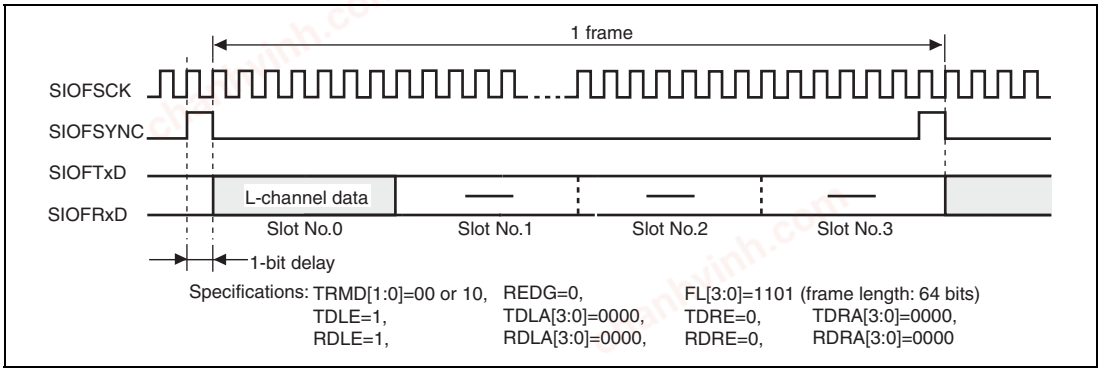

Figure 22.12 Transmit and Receive Timing (16-Bit Monaural Data)

(4) 16-bit Stereo Data (1)

Falling edge sampling, slot No.0 used for left channel data, slot No.1 used for right channel data, and frame length = 128 bits

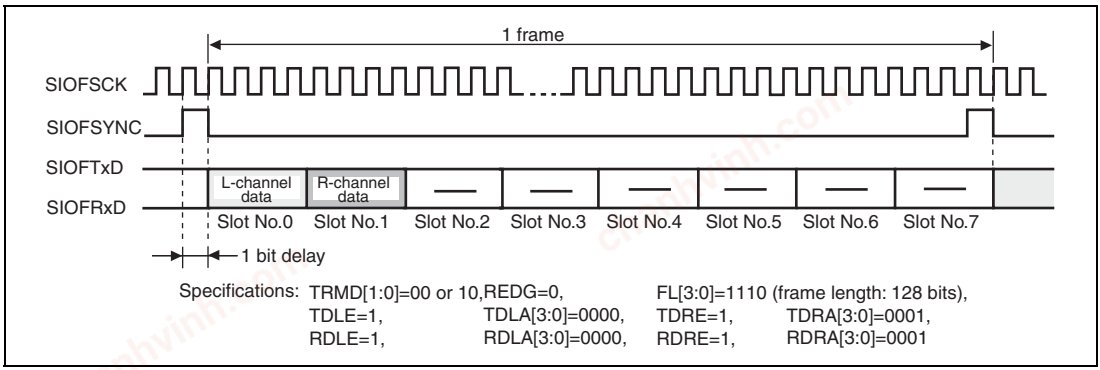

Figure 22.13 Transmit and Receive Timing (16-Bit Stereo Data (1))

chanhvinh.com

(5) 16-bit Stereo Data (2)

Falling edge sampling, slot No.0 used for left channel data, slot No.2 used for right channel data, and frame length = 128 bits

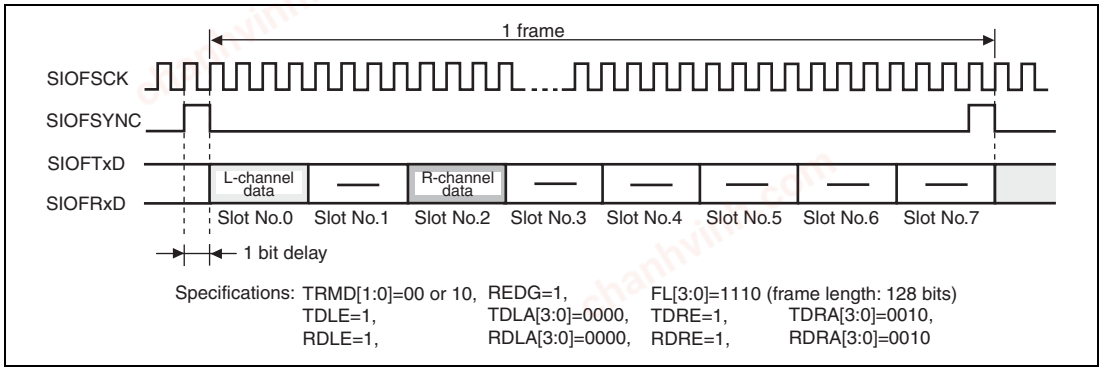

Figure 22.14 Transmit and Receive Timing (16-Bit Stereo Data (2))

(6) Synchronization-Pulse Output Mode at End of Each Slot (SYNCAT Bit = 1)

Falling edge sampling, slot No.0 used for left channel data, slot No.1 used for right-channel data, and frame length = 128 bits

In this mode, valid data must be set to slot No. 0. In addition, make sure that valid data is transmitted/received or transmitted.

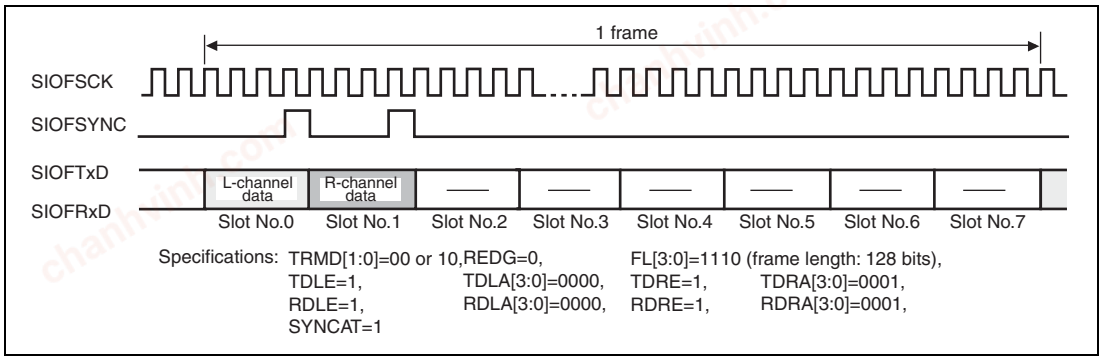

Figure 22.15 Transmit and Receive Timing (16-Bit Stereo Data)

chanhvinh.com

chanhvinh.com
chanhvinh.com
chanhvinh.com

chanhvinh.com

Section 23 Controller Area Network

23.1 Summary

23.1.1 Overview

This document primarily describes the programming interface for the controller area network (Renesas CAN Time Trigger Level 1) module. It serves to facilitate the hardware/software interface so that engineers involved in this module implementation can ensure the design is successful.

Deep standby mode can be canceled by change on CRxn (PC5, PC7, PJ20, PJ22) pin. For details, refer to section 49, Power-Down Modes.

23.1.2 Scope

The CAN Data Link Controller function is not described in this document. It is the responsibility of the reader to investigate the CAN Specification Document (see references). The interfaces from the CAN Controller are described, in so far as they pertain to the connection with the User Interface.

The programming model is described in some detail. It is not the intention of this document to describe the implementation of the programming interface, but to simply present the interface to the underlying CAN functionality.

The document places no constraints upon the implementation of this module in terms of process, packaging or power supply criteria. These issues are resolved where appropriate in implementation specifications.

23.1.3 Audience

In particular this document provides the design reference for software authors who are responsible for creating a CAN application using this module.

In the creation of this module user interface LSI engineers must use this document to understand the hardware requirements.

chanhvinh.com

23.1.4 References

1. CAN Specification Version 2.0 part A, Robert Bosch GmbH, 1991
2. CAN Specification Version 2.0 part B, Robert Bosch GmbH, 1991
3. Implementation Guide for the CAN Protocol, CAN Specification 2.0 Addendum, CAN In Automation, Erlangen, Germany, 1997
4. Road vehicles - Controller area network (CAN): Part 1: Data link layer and physical signalling (ISO-11898-1, 2003)
5. Road vehicles - Controller area network (CAN): Part 4: Time triggered communication (ISO-11898-4, 2004)

23.1.5 Features

- Supports CAN specification 2.0B
- Bit timing compliant with ISO-11898-1
- 32 Mailbox version
- Clock frequency: Up to 33.33 MHz
- 31 programmable Mailboxes for transmit / receive + 1 receive-only mailbox
- Sleep mode for low power consumption and automatic recovery from sleep mode by detecting CAN bus activity
- Programmable receive filter mask (standard and extended identifier) supported by all Mailboxes
- Programmable CAN data rate up to 1MBit/s
- Transmit message queuing with internal priority sorting mechanism against the problem of priority inversion for real-time applications
- Data buffer access without SW handshake requirement in reception
- Flexible micro-controller interface
- Flexible interrupt structure
- 16-bit free running timer with flexible clock sources and pre-scaler, 3 Timer Compare Match Registers
- 6-bit Basic Cycle Counter for Time Trigger Transmission
- Timer Compare Match Registers with interrupt generation
- Timer counter clear / set capability
- Registers for Time-Trigger: Local_Time, Cycle_time, Ref_Mark, Tx_Enable Window, Ref_Trigger_Offset
- Flexible TimeStamp at SOF for both transmission and reception supported
- Time-Trigger Transmission, Periodic Transmission supported (on top of Event Trigger Transmission)
- Basic Cycle value can be embedded into a CAN frame and transmitted

chanhvinh.com

23.2 Architecture

This module device offers a flexible and sophisticated way to organise and control CAN frames, providing the compliance to CAN2.0B Active and ISO-11898-1. The module is formed from 5 different functional entities. These are the Micro Processor Interface (MPI), Mailbox, Mailbox Control, Timer, and CAN Interface. The figure below shows the block diagram of the Module. The bus interface timing is designed according to the peripheral bus I/F required for each product.

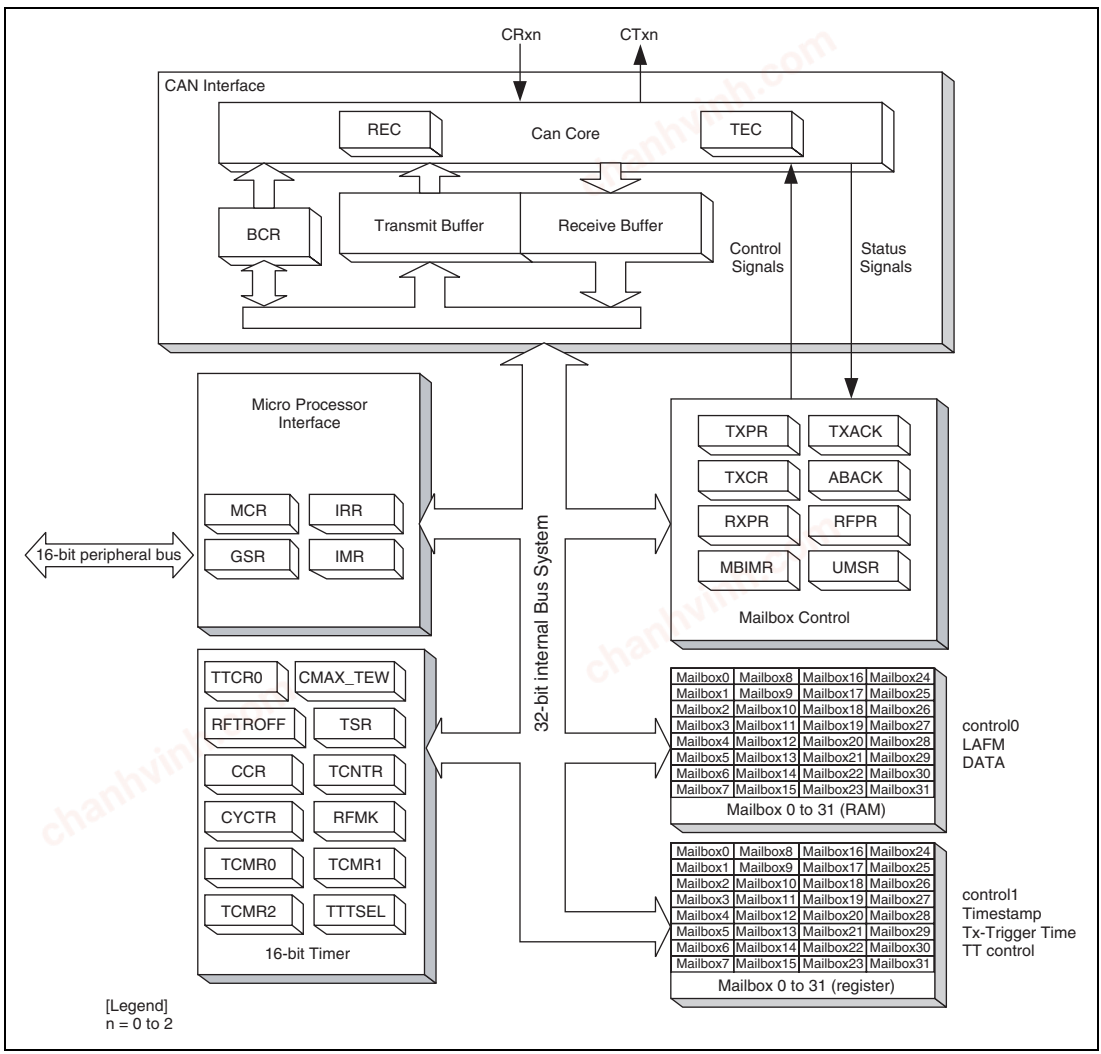

Figure 23.1 This Module Architecture

chanhvinh.com

Important: LongWord (32-bit) access must be implemented as 2 consecutive word (16-bit) accesses. In this manual, LongWord access means the two consecutive accesses.

- Micro Processor Interface (MPI)

  The MPI allows communication between the Renesas CPU and this module's registers/mailboxes to control the memory interface. It also contains the Wakeup Control logic that detects the CAN bus activities and notifies the MPI and the other parts of this module so that this module can automatically exit the Sleep mode.

  It contains registers such as MCR, IRR, GSR and IMR.

- Mailbox

  The Mailboxes consists of RAM configured as message buffers and registers. There are 32 Mailboxes, and each mailbox has the following information.

  <RAM>

  — CAN message control (identifier, rtr, ide,etc)

  — CAN message data (for CAN Data frames)

  — Local Acceptance Filter Mask for reception

  <Registers>

  — CAN message control (dlc)

  — Time Stamp for message reception/transmission

  — 3-bit wide Mailbox Configuration, Disable Automatic Re-Transmission bit, Auto-Transmission for Remote Request bit, New Message Control bit

  — Tx-Trigger Time

- Mailbox Control

  The Mailbox Control handles the following functions.

  — For received messages, compare the IDs and generate appropriate RAM addresses/data to store messages from the CAN Interface into the Mailbox and set/clear appropriate registers accordingly.

  — To transmit event-triggered messages, run the internal arbitration to pick the correct priority message, and load the message from the Mailbox into the Tx-buffer of the CAN Interface and set/clear appropriate registers accordingly. In the case of time-triggered transmission, compare match of Tx-Trigger time invoke loading the messages.

  — Arbitrates Mailbox accesses between the CPU and the Mailbox Control.

  — Contains registers such as TXPR, TXCR, TXACK, ABACK, RXPR, RFPR, UMSR and MBIMR.

chanhvinh.com

- Timer

  The Timer function is the functional entity, which provides this module with support for transmitting messages at a specific time frame and recording the result.

  The Timer is a 16-bit free running up counter which can be controlled by the CPU. It provides one 16-bit Compare Match Register to compare with Local Time and two 16-bit ones to compare with Cycle Time. The Compare Match Registers can generate interrupt signals and clear the Counter.

  The clock period of this Timer offers a wide selection derived from the system clock or can be programmed to be incremented with one nominal bit timing of CAN Bus.

  Contains registers such as TCNTR, TTCR0, CMAX_TEW, RFTROFF, TSR, CCR, CYCTR, RFMK, TCMR0, TCMR1, TCMR2 and TTTSEL.

- CAN Interface

  This block conforms to the requirements for a CAN Bus Data Link Controller which is specified in Ref. [2, 4]. It fulfils all the functions of a standard DLC as specified by the OSI 7 Layer Reference model. This functional entity also provides the registers and the logic which are specific to a given CAN bus, which includes the Receive Error Counter, Transmit Error Counter, the Bit Configuration Registers and various useful Test Modes. This block also contains functional entities to hold the data received and the data to be transmitted for the CAN Data Link Controller.

chanhvinh.com

23.3 Programming Model - Overview

The purpose of this programming interface is to allow convenient, effective access to the CAN bus for efficient message transfer. Please bear in mind that the user manual reports all settings allowed by this module IP. Different use of this module is not allowed.

23.3.1 Memory Map

The diagram of the memory map is shown below.

chanhvinh.com

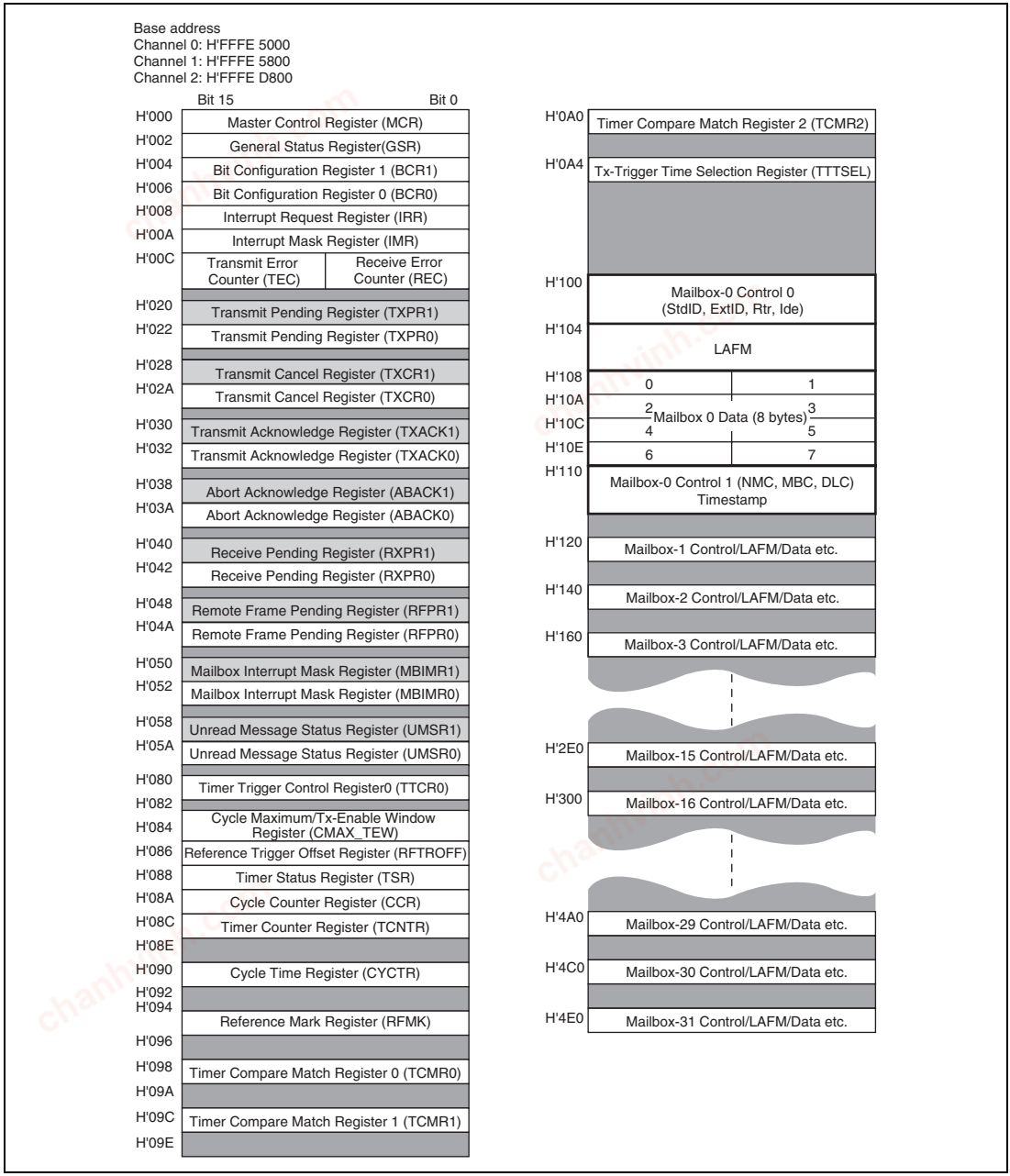

Figure 23.2 Memory Map

The locations not used (between H'000 and H'4F3) are reserved and cannot be accessed.

chanhvinh.com

23.3.2 Mailbox Structure

Mailboxes play a role as message buffers to transmit/receive CAN frames. Each Mailbox is comprised of 3 identical storage fields that are 1): Message Control, 2): Local Acceptance Filter Mask, 3): Message Data. In addition some Mailboxes contain the following extra Fields: 4): Time Stamp, 5): Time Trigger configuration and 6): Time Trigger Control. The following table shows the address map for the control, LAFM, data, timestamp, Transmission Trigger Time and Time Trigger Control addresses for each mailbox.

	Address						
	Control0	LAFM	Data	Control1	Time Stamp	Trigger Time	TT control
Mailbox	4 bytes	4 bytes	8 bytes	2 bytes	2 bytes	2 bytes	2 bytes
0 (Receive Only)	100 – 103	104– 107	108 – 10F	110 – 111	112 – 113	No	No
1	120 – 123	124 – 127	128 – 12F	130 – 131	132 – 133	No	No
2	140 – 143	144 – 147	148 – 14F	150 – 151	152 – 153	No	No
3	160 – 163	164 – 167	168 – 16F	170 – 171	172 – 173	No	No
4	180 – 183	184 – 187	188 – 18F	190 – 191	192 – 193	No	No
5	1A0 – 1A3	1A4 – 1A7	1A8 – 1AF	1B0 – 1B1	1B2 – 1B3	No	No
6	1C0 – 1C3	1C4 – 1C7	1C8 – 1CF	1D0 – 1D1	1D2 – 1D3	No	No
7	1E0 – 1E3	1E4 – 1E7	1E8 – 1EF	1F0 – 1F1	1F2 – 1F3	No	No
8	200 – 203	204 – 207	208 – 20F	210 – 211	212 – 213	No	No
9	220 – 223	224 – 227	228 – 22F	230 – 231	232 – 233	No	No
10	240 – 243	244 – 247	248 – 24F	250 – 251	252 – 253	No	No
11	260 – 263	264 – 267	268 – 26F	270 – 271	272 – 273	No	No
12	280 – 283	284 – 287	288 – 28F	290 – 291	292 – 293	No	No
13	2A0 – 2A3	2A4 – 2A7	2A8 – 2AF	2B0 – 2B1	2B2 – 2B3	No	No
14	2C0 – 2C3	2C4 – 2C7	2C8 – 2CF	2D0 – 2D1	2D2 – 2D3	No	No
15	2E0 – 2E3	2E4 – 2E7	2E8 – 2EF	2F0 – 2F1	2F2 – 2F3	No	No
16	300 – 303	304 – 307	308 – 30F	310 – 311	No	No	No
17	320 – 323	324 – 327	328 – 32F	330 – 331	No	No	No
18	340 – 343	344 – 347	348 – 34F	350 – 351	No	No	No

chanhvinh.com

	Address						
	Control0	LAFM	Data	Control1	Time Stamp	Trigger Time	TT control
Mailbox	4 bytes	4 bytes	8 bytes	2 bytes	2 bytes	2 bytes	2 bytes
19	360 – 363	364 – 367	368 – 36F	370 – 371	No	No	No
20	380 – 383	384 – 387	388 – 38F	390 – 391	No	No	No
21	3A0 – 3A3	3A4 – 3A7	3A8 – 3AF	3B0 – 3B1	No	No	No
22	3C0 – 3C3	3C4 – 3C7	3C8 – 3CF	3D0 – 3D1	No	No	No
23	3E0 – 3E3	3E4 – 3E7	3E8 – 3EF	3F0 – 3F1	No	No	No
24	400 – 403	404 – 407	408 – 40F	410 – 411	No	414 – 415	416 – 417
25	420 – 423	424 – 427	428 – 42F	430 – 431	No	434 – 435	436 – 437
26	440 – 443	444 – 447	448 – 44F	450 – 451	No	454 – 455	456 – 457
27	460 – 463	464 – 467	468 – 46F	470 – 471	No	474 – 475	476 – 477
28	480 – 483	484 – 487	488 – 48F	490 – 491	No	494 – 495	496 – 497
29	4A0 – 4A3	4A4 – 4A7	4A8 – 4AF	4B0 – 4B1	No	4B4 – 4B5	4B6 – 4B7
30	4C0 – 4C3	4C4 – 4C7	4C8 – 4CF	4D0 – 4D1	4D2 – 4D3 (Local Time)	4D4 – 4D5	No
31	4E0 – 4E3	4E4 – 4E7	4E8 – 4EF	4F0 – 4F1	4F2 – 4F3 (Local Time)	No	No

Mailbox-0 is a receive-only box, and all the other Mailboxes can operate as both receive and transmit boxes, dependant upon the MBC (Mailbox Configuration) bits in the Message Control. The following diagram shows the structure of a Mailbox in detail.

chanhvinh.com

Table 23.1 Roles of Mailboxes

	Event Trigger		Time Trigger		Remark	
	Tx	Rx	Tx	Rx	TimeStamp	Tx-Trigger Time
MB31	Settable	Settable	—	Time reference reception	Available	—
MB30	Settable	Settable	Time reference transmission in time master mode	Reception in time slave mode	Available	Available
MB29 - 24	Settable	Settable	Settable	Settable	—	Available
MB23 - 16	Settable	Settable	— (ET)	Settable	—	—
MB15 - 1	Settable	Settable	— (ET)	Settable	Available	—
MB0	—	Settable	—	Settable	Available	—

(ET) shows that it works during merged arbitrating window, after completion of time-triggered transmission.

MB0 (reception MB with timestamp)

Byte: 8-bit access, Word: 16-bit access, LW (LongWord) : 32-bit access

Address	Data Bus 15	14	13	12	11	10	9	8	7	6	5	4	3	2	1	0	Access Size	Field Name
H'100 + N*32	IDE	RTR	0	STDID[10:0]											EXTID[17:16]		Word/LW	Control 0
H'102 + N*32	EXTID[15:0]																Word	
H'104 + N*32	IDE LAFM	0	0	STDID_LAFM[10:0]											EXTID LAFM[17:16]		Word/LW	LAFM
H'106 + N*32	EXTID_LAFM[15:0]																Word	
H'108 + N*32	MSG_DATA_0 (first Rx/Tx Byte)								MSG_DATA_1								Byte/Word/LW	Data
H'10A + N*32	MSG_DATA_2								MSG_DATA_3								Byte/Word	
H'10C + N*32	MSG_DATA_4								MSG_DATA_5								Byte/Word/LW	
H'10E + N*32	MSG_DATA_6								MSG_DATA_7								Byte/Word	
H'110 + N*32	0	0	NMC	0	0	MBC[2:0]			0	0	0	0	DLC[3:0]				Byte/Word	Control 1
H'112 + N*32	TimeStamp[15:0] (CYCTR[15:0] or CCR[5:0]/CYCTR[15:6] at SOF)																Word	TimeStamp

MBC[1] is fixed to "1"

MB15 to 1 (MB with timestamp)

Address	Data Bus 15	14	13	12	11	10	9	8	7	6	5	4	3	2	1	0	Access Size	Field Name
H'100 + N*32	IDE	RTR	0	STDID[10:0]											EXTID[17:16]		Word/LW	Control 0
H'102 + N*32	EXTID[15:0]																Word	
H'104 + N*32	IDE LAFM	0	0	STDID_LAFM[10:0]											EXTID LAFM[17:16]		Word/LW	LAFM
H'106 + N*32	EXTID_LAFM[15:0]																Word	
H'108 + N*32	MSG_DATA_0 (first Rx/Tx Byte)								MSG_DATA_1								Byte/Word/LW	Data
H'10A + N*32	MSG_DATA_2								MSG_DATA_3								Byte/Word	
H'10C + N*32	MSG_DATA_4								MSG_DATA_5								Byte/Word/LW	
H'10E + N*32	MSG_DATA_6								MSG_DATA_7								Byte/Word	
H'110 + N*32	0	0	NMC	ATX	DART	MBC[2:0]			0	0	0	0	DLC[3:0]				Byte/Word	Control 1
H'112 + N*32	TimeStamp[15:0] (CYCTR[15:0] or CCR[5:0]/CYCTR[15:6] at SOF)																Word	TimeStamp

Figure 23.3 Mailbox-N Structure

chanhvinh.com

MB23 to 16 (MB without timestamp)

Address	Data Bus																Access Size	Field Name
	15	14	13	12	11	10	9	8	7	6	5	4	3	2	1	0		
H'100 + N*32	IDE	RTR	0	STDID[10:0]											EXTID[17:16]		Word/LW	Control 0
H'102 + N*32	EXTID[15:0]																Word	
H'104 + N*32	IDE LAFM	0	0	STDID_LAFM[10:0]											EXTID LAFM[17:16]		Word/LW	LAFM
H'106 + N*32	EXTID_LAFM[15:0]																Word	
H'108 + N*32	MSG_DATA_0 (first Rx/Tx Byte)								MSG_DATA_1								Byte/Word/LW	Data
H'10A + N*32	MSG_DATA_2								MSG_DATA_3								Byte/Word	
H'10C + N*32	MSG_DATA_4								MSG_DATA_5								Byte/Word/LW	
H'10E + N*32	MSG_DATA_6								MSG_DATA_7								Byte/Word	
H'110 + N*32	0	0	NMC	ATX	DART	MBC[2:0]			0	0	0	0	DLC[3:0]				Byte/Word	Control 1

MB29 to 24 (Time-Triggered Transmission in Time Trigger mode)

Address	Data Bus																Access Size	Field Name
	15	14	13	12	11	10	9	8	7	6	5	4	3	2	1	0		
H'100 + N*32	IDE	RTR	0	STDID[10:0]											EXTID[17:16]		Word/LW	Control 0
H'102 + N*32	EXTID[15:0]																Word	
H'104 + N*32	IDE LAFM	0	0	STDID_LAFM[10:0]											EXTID LAFM[17:16]		Word/LW	LAFM
H'106 + N*32	EXTID_LAFM[15:0]																Word	
H'108 + N*32	MSG_DATA_0 (first Rx/Tx Byte)								MSG_DATA_1								Byte/Word/LW	Data
H'10A + N*32	MSG_DATA_2								MSG_DATA_3								Byte/Word	
H'10C + N*32	MSG_DATA_4								MSG_DATA_5								Byte/Word/LW	
H'10E + N*32	MSG_DATA_6								MSG_DATA_7								Byte/Word	
H'110 + N*32	0	0	NMC	ATX	DART	MBC[2:0]			0	0	0	0	DLC[3:0]				Byte/Word	Control 1
H'112 + N*32	reserved																-	-
H'114 + N*32	Tx-Triggered Time (TTT)																Word	Trigger Time
H'116 + N*32	TTW[1:0]		offset						0	0	0	0	0	Rep_Factor			Word	TT control

Figure 23.3 Mailbox-N Structure (continued)

chanhvinh.com

MB30 (Time Reference Transmitssion in Time Trigger mode)

Address	Data Bus																Access Size	Field Name
	15	14	13	12	11	10	9	8	7	6	5	4	3	2	1	0		
H'100 + N*32	IDE	RTR	0	STDID[10:0]											EXTID[17:16]		Word/LW	Control 0
H'102 + N*32	EXTID[15:0]																Word	
H'104 + N*32	IDE_LAFM	0	0	STDID_LAFM[10:0]											EXTID_LAFM[17:16]		Word/LW	LAFM
H'106 + N*32	EXTID_LAFM[15:0]																Word	
H'108 + N*32	MSG_DATA_0 (first Rx/Tx Byte)								MSG_DATA_1								Byte/Word/LW	Data
H'10A + N*32	MSG_DATA_2								MSG_DATA_3								Byte/Word	
H'10C + N*32	MSG_DATA_4								MSG_DATA_5								Byte/Word/LW	
H'10E + N*32	MSG_DATA_6								MSG_DATA_7								Byte/Word	
H'110 + N*32	0	0	NMC	ATX	DART	MBC[2:0]			0	0	0	0	DLC[3:0]				Byte/Word	Control 1
H'112 + N*32	TimeStamp[15:0] (TCNTR at SOF)																Word	TimeStamp
H'114 + N*32	Tx-Triggered Time (TTT) as Time Reference																Word	Trigger Time

MB31 (Time Reference Reception in Time Trigger mode)

Address	Data Bus																Access Size	Field Name
	15	14	13	12	11	10	9	8	7	6	5	4	3	2	1	0		
H'100 + N*32	IDE	RTR	0	STDID[10:0]											EXTID[17:16]		Word/LW	Control 0
H'102 + N*32	EXTID[15:0]																Word	
H'104 + N*32	IDE_LAFM	0	0	STDID_LAFM[10:0]											EXTID_LAFM[17:16]		Word/LW	LAFM
H'106 + N*32	EXTID_LAFM[15:0]																Word	
H'108 + N*32	MSG_DATA_0 (first Rx/Tx Byte)								MSG_DATA_1								Byte/Word/LW	Data
H'10A + N*32	MSG_DATA_2								MSG_DATA_3								Byte/Word	
H'10C + N*32	MSG_DATA_4								MSG_DATA_5								Byte/Word/LW	
H'10E + N*32	MSG_DATA_6								MSG_DATA_7								Byte/Word	
H'110 + N*32	0	0	NMC	ATX	DART	MBC[2:0]			0	0	0	0	DLC[3:0]				Byte/Word	Control 1
H'112 + N*32	TimeStamp[15:0] (TCNTR at SOF)																Word	TimeStamp

Figure 23.3 Mailbox-N Structure (continued)

Notes: 1. All bits shadowed in grey are reserved and must be written LOW. The value returned by a read may not always be '0' and should not be relied upon.

2. ATX and DART are not supported by Mailbox-0, and the MBC setting of Mailbox-0 is limited.

3. ID Reorder (MCR15) can change the order of STDID, RTR, IDE and EXTID of both message control and LAFM.

chanhvinh.com

(1) Message Control Field

STDID[10:0]: These bits set the identifier (standard identifier) of data frames and remote frames.

EXTID[17:0]: These bits set the identifier (extended identifier) of data frames and remote frames.

RTR (Remote Transmission Request bit): Used to distinguish between data frames and remote frames. This bit is overwritten by received CAN Frames depending on Data Frames or Remote Frames.

Important: Please note that, when ATX bit is set with the setting MBC = 001(bin), the RTR bit will never be set. When a Remote Frame is received, the CPU can be notified by the corresponding RFPR set or IRR[2] (Remote Frame Receive Interrupt), however, as this module needs to transmit the current message as a Data Frame, the RTR bit remains unchanged.

Important: In order to support automatic answer to remote frame when MBC = 001 (bin) is used and ATX = 1 the RTR flag must be programmed to zero to allow data frame to be transmitted.

Note: when a Mailbox is configured to send a remote frame request the DLC used for transmission is the one stored into the Mailbox.

RTR	Description
0	Data frame
1	Remote frame

IDE (Identifier Extension bit): Used to distinguish between the standard format and extended format of CAN data frames and remote frames.

IDE	Description
0	Standard format
1	Extended format

chanhvinh.com

- Mailbox-0

Bit:	15	14	13	12	11	10	9	8	7	6	5	4	3	2	1	0
	0	0	NMC	0	0	MBC[2:0]			0	0	0	0	DLC[3:0]			
Initial value:	0	0	0	0	0	1	1	1	0	0	0	0	0	0	0	0
R/W:	R	R	R/W	R	R	R/W	R	R/W	R	R	R	R	R/W	R/W	R/W	R/W

Note: MBC[1] of MB0 is always "1".

- Mailbox-31 to 1

Bit:	15	14	13	12	11	10	9	8	7	6	5	4	3	2	1	0
	0	0	NMC	ATX	DART	MBC[2:0]			0	0	0	0	DLC[3:0]			
Initial value:	0	0	0	0	0	1	1	1	0	0	0	0	0	0	0	0
R/W:	R	R	R/W	R/W	R/W	R/W	R/W	R/W	R	R	R	R	R/W	R/W	R/W	R/W

NMC (New Message Control): When this bit is set to '0', the Mailbox of which the RXPR or RFPR bit is already set does not store the new message but maintains the old one and sets the UMSR correspondent bit. When this bit is set to '1', the Mailbox of which the RXPR or RFPR bit is already set overwrites with the new message and sets the UMSR correspondent bit.

Important: Please note that if a remote frame is overwritten with a data frame or vice versa could be that both RXPR and RFPR flags (together with UMSR) are set for the same Mailbox. In this case the RTR bit within the Mailbox Control Field should be relied upon.

Important: Please note that when the Time Triggered mode is used NMC needs to be set to ‘1’ for Mailbox 31 to allow synchronization with all incoming reference messages even when RXPR[31] is not cleared.

NMC	Description
0	Overrun mode (Initial value)
1	Overwrite mode

chanhvinh.com

ATX (Automatic Transmission of Data Frame): When this bit is set to ‘1’ and a Remote Frame is received into the Mailbox DLC is stored. Then, a Data Frame is transmitted from the same Mailbox using the current contents of the message data and updated DLC by setting the corresponding TXPR automatically. The scheduling of transmission is still governed by ID priority or Mailbox priority as configured with the Message Transmission Priority control bit (MCR.2). In order to use this function, MBC[2:0] needs to be programmed to be ‘001’ (Bin). When a transmission is performed by this function, the DLC (Data Length Code) to be used is the one that has been received. Application needs to guarantee that the DLC of the remote frame correspond to the DLC of the data frame requested.

Important: When ATX is used and MBC = 001 (Bin) the filter for the IDE bit cannot be used since ID of remote frame has to be exactly the same as that of data frame as the reply message.

Important: Please note that, when this function is used, the RTR bit will never be set despite receiving a Remote Frame. When a Remote Frame is received, the CPU will be notified by the corresponding RFPR set, however, as this module needs to transmit the current message as a Data Frame, the RTR bit remains unchanged.

Important: Please note that in case of overrun condition (UMSR flag set when the Mailbox has its NMC = 0) the message received is discarded. In case a remote frame is causing overrun into a Mailbox configured with ATX = 1, the transmission of the corresponding data frame may be triggered only if the related PFPR flag is cleared by the CPU when the UMSR flag is set. In such case PFPR flag would get set again.

ATX	Description
0	Automatic Transmission of Data Frame disabled (Initial value)
1	Automatic Transmission of Data Frame enabled

DART (Disable Automatic Re-Transmission): When this bit is set, it disables the automatic re-transmission of a message in the event of an error on the CAN bus or an arbitration lost on the CAN bus. In effect, when this function is used, the corresponding TXCR bit is automatically set at the start of transmission. When this bit is set to '0', this module tries to transmit the message as many times as required until it is successfully transmitted or it is cancelled by the TXCR.

DART	Description
0	Re-transmission enabled (Initial value)
1	Re-Transmission disabled

chanhvinh.com

MBC[2:0] (Mailbox Configuration): These bits configure the nature of each Mailbox as follows. When MBC = 111 (Bin), the Mailbox is inactive, i.e., it does not receive or transmit a message regardless of TXPR or other settings. The MBC = '110', '101' and '100' settings are prohibited. When the MBC is set to any other value, the LAFM field becomes available. Please don't set TXPR when MBC is set as reception as there is no hardware protection, and TXPR will remain set. MBC[1] of Mailbox-0 is fixed to "1" by hardware. This is to ensure that MB0 cannot be configured to transmit Messages.

MBC[2]	MBC[1]	MBC[0]	Data Frame Transmit	Remote Frame Transmit	Data Frame Receive	Remote Frame Receive	Remarks
0	0	0	Yes	Yes	No	No	• Not allowed for Mailbox-0 • Time-Triggered transmission can be used
0	0	1	Yes	Yes	No	Yes	• Can be used with ATX* • Not allowed for Mailbox-0 • LAFM can be used
0	1	0	No	No	Yes	Yes	• Allowed for Mailbox-0 • LAFM can be used
0	1	1	No	No	Yes	No	• Allowed for Mailbox-0 • LAFM can be used
1	0	0	Setting prohibited				
1	0	1	Setting prohibited				
1	1	0	Setting prohibited				
1	1	1	Mailbox inactive (Initial value)				

Notes: * In order to support automatic retransmission, RTR shall be "0" when MBC = 001(bin) and ATX = 1.
When ATX = 1 is used the filter for IDE must not be used.

chanhvinh.com

DLC[3:0] (Data Length Code): These bits encode the number of data bytes from 0,1, 2, … 8 that will be transmitted in a data frame. Please note that when a remote frame request is transmitted the DLC value to be used must be the same as the DLC of the data frame that is requested.

DLC[3]	DLC[2]	DLC[1]	DLC[0]	Description
0	0	0	0	Data Length = 0 bytes (Initial value)
0	0	0	1	Data Length = 1 byte
0	0	1	0	Data Length = 2 bytes
0	0	1	1	Data Length = 3 bytes
0	1	0	0	Data Length = 4 bytes
0	1	0	1	Data Length = 5 bytes
0	1	1	0	Data Length = 6 bytes
0	1	1	1	Data Length = 7 bytes
1	x	x	x	Data Length = 8 bytes

(2) Local Acceptance Filter Mask (LAFM)

This area is used as Local Acceptance Filter Mask (LAFM) for receive boxes**.**

LAFM: When MBC is set to 001, 010, 011(Bin), this field is used as LAFM Field. It allows a Mailbox to accept more than one identifier. The LAFM is comprised of two 16-bit read/write areas as follows.

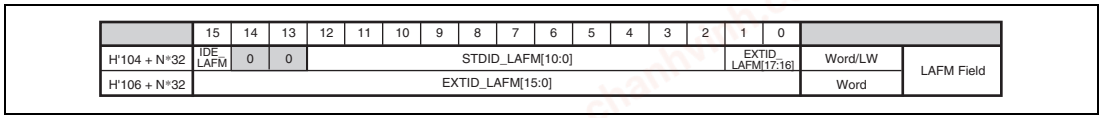

Figure 23.4 Acceptance filter

If a bit is set in the LAFM, then the corresponding bit of a received CAN identifier is ignored when this module searches a Mailbox with the matching CAN identifier. If the bit is cleared, then the corresponding bit of a received CAN identifier must match to the STDID/IDE/EXTID set in the mailbox to be stored. The structure of the LAFM is same as the message control in a Mailbox. If this function is not required, it must be filled with '0'.

Important: This module starts to find a matching identifier from Mailbox-31 down to Mailbox-0. As soon as this module finds one matching, it stops the search. The message will be stored or not depending on the NMC and RXPR/RFPR flags. This means that, even using LAFM, a received message can only be stored into 1 Mailbox.

chanhvinh.com

Important: When a message is received and a matching Mailbox is found, the whole message is stored into the Mailbox. This means that, if the LAFM is used, the STDID, RTR, IDE and EXTID may differ to the ones originally set as they are updated with the STDID, RTR, IDE and EXTID of the received message.

STD_LAFM[10:0] — Filter mask bits for the CAN base identifier [10:0] bits.

STD_LAFM[10:0]	Description
0	Corresponding STD_ID bit is cared
1	Corresponding STD_ID bit is "don't cared"

EXT_LAFM[17:0] — Filter mask bits for the CAN Extended identifier [17:0] bits.

EXT_LAFM[17:0]	Description
0	Corresponding EXT_ID bit is cared
1	Corresponding EXT_ID bit is "don't cared"

IDE_LAFM — Filter mask bit for the CAN IDE bit.

IDE_LAFM	Description
0	Corresponding IDE bit is cared
1	Corresponding IDE bit is "don't cared"

(3) Message Data Fields

Storage for the CAN message data that is transmitted or received. MSG_DATA[0] corresponds to the first data byte that is transmitted or received. The bit order on the CAN bus is bit 7 through to bit 0.

When CMAX!= 3'b111/MBC[30] = 3'b000 and TXPR[30] is set, Mailbox-30 is configured as transmission of time reference. Its DLC must be greater than 0 and its RTR must be zero (as specified for TTCAN Level 1) so that the Cycle_count (CCR register) is embedded in the first byte of the data field instead of MSG_DATA_0[5:0] when this Mailbox starts transmission. This function shall be used when this module is enabled to work in TTCAN mode to perform a Potential Time Master role to send the Time reference message. MSG_DATA_0[7:6] is still transmitted as stored in the Mailbox. User can set MSG_DATA_0[7] when a Next_is_Gap needs to be transmitted.

chanhvinh.com

Please note that the CCR value is only embedded on the frame transmitted but not stored back into Mailbox 30.

When CMAX!= 3'b111, MBC[31] = 3'b011 and TXPR[31] is cleared, Mailbox-31 is configured as reception of time reference. When a valid reference message is received (DLC > 0) this module performs internal synchronisation (modifying its RFMK and basic cycle CCR).

MB30 - 31

	15	14	13	12	11	10	9	8	7	6	5	4	3	2	1	0		
H'108 + N*32	Next_is_Gap/Cycle_Counter (first Rx/Tx Byte)								MSG_DATA_1								Byte/Word/LW	Data
H'10A + N*32	MSG_DATA_2								MSG_DATA_3								Byte/Word	
H'10C + N*32	MSG_DATA_4								MSG_DATA_5								Byte/Word/LW	
H'10E + N*32	MSG_DATA_6								MSG_DATA_7								Byte/Word	

Figure 23.5 Message Data Field

(4) Timestamp

Storage for the Timestamp recorded on messages for transmit/receive. The Timestamp will be a useful function to monitor if messages are received/transmitted within expected schedule.

- Timestamp

Bit:	15	14	13	12	11	10	9	8	7	6	5	4	3	2	1	0
	TS15	TS14	TS13	TS12	TS11	TS10	TS9	TS8	TS7	TS6	TS5	TS4	TS3	TS2	TS1	TS0
Initial value:	0	0	0	0	0	0	0	0	0	0	0	0	0	0	0	0
R/W:	R	R	R	R	R	R	R	R	R	R	R	R	R	R	R	R

Message Receive: For received messages of Mailbox-15 to 0, Timestamp always captures the CYCTR (Cycle Time Register) value or Cycle_Counter CCR[5:0] + CYCTR[15:6] value, depending on the programmed value in the bit 14 of TTCR0 (Timer Trigger Control Register 0) at SOF.

For messages received into Mailboxes 30 and 31, Timestamp captures the TCNTR (Timer Counter Register) value at SOF.

Message Transmit: For transmitted messages of Mailbox-15 to 1, Timestamp always captures the CYCTR (Cycle Time Register) value or Cycle_Counter CCR[5:0] + CYCTR[15:6] value, depending on the programmed value in the bit 14 of TTCR0 (Timer Trigger Control Register 0), at SOF.

For messages transmitted from Mailboxes30 and 31, Timestamp captures the TCNTR (Timer Counter Register) value at SOF.

chanhvinh.com

Important: Please note that the TimeStamp is stored in a temporary register. Only after a successful transmission or reception the value is then copied into the related Mailbox field. The TimeStamp may also be updated if the CPU clears RXPR[N]/RFPR[N] at the same time that UMSR[N] is set in overrun, however it can be read properly before clearing RXPR[N]/RFPR[N].

(5) Tx-Trigger Time (TTT) and Time Trigger control

For Mailbox-29 to 24, when MBC is set to 000 (Bin) in time trigger mode (CMAX!= 3'b111), Tx-Trigger Time works as Time_Mark to determine the boundary between time windows. The TTT and TT control are comprised of two 16-bit read/write areas as follows. Mailbox-30 doesn't have TT control and works as Time_Ref.

Mailbox 30 to 24 can be used for reception if not used for transmission in TT mode. However they cannot join the event trigger transmission queue when the TT mode is used.

- Tx-Trigger Time

Bit:	15	14	13	12	11	10	9	8	7	6	5	4	3	2	1	0
	TTT15	TTT14	TTT13	TTT12	TTT11	TTT10	TTT9	TTT8	TTT7	TTT6	TTT5	TTT4	TTT3	TTT2	TTT1	TTT0
Initial value:	0	0	0	0	0	0	0	0	0	0	0	0	0	0	0	0
R/W:	R/W	R/W	R/W	R/W	R/W	R/W	R/W	R/W	R/W	R/W	R/W	R/W	R/W	R/W	R/W	R/W

- Time Trigger control

Bit:	15	14	13	12	11	10	9	8	7	6	5	4	3	2	1	0
	TTW[1:0]		Offset[5:0]						0	0	0	0	0	rep_factor[2:0]		
Initial value:	0	0	0	0	0	0	0	0	0	0	0	0	0	0	0	0
R/W:	R/W	R/W	R/W	R/W	R/W	R/W	R/W	R/W	R	R	R	R	R	R/W	R/W	R/W

The following figure shows the differences between all Mailboxes supporting Time Triggered mode.

MB29 to 24

	15	14	13	12	11	10	9	8	7	6	5	4	3	2	1	0		
H'114 + N*32	Tx-Trigger Time (Cycle Time)																Word	Trigger Time
H'116 + N*32	TTW[1:0]		Offset[5:0]						0	0	0	0	0	rep_factor[2:0]			Word	TT control

MB30

	15	14	13	12	11	10	9	8	7	6	5	4	3	2	1	0		
H'114 + N*32	Tx-Trigger Time (Cycle Time)																Word	Trigger Time

Figure 23.6 Tx-Trigger control field

chanhvinh.com

- **TTW[1:0] (Time Trigger Window):** These bits show the attribute of time windows. Please note that once a merged arbitrating window is opened by TTW = 2'b10, the window must be closed by TTW = 2'b11. Several messages with TTW = 2'b10 may be used within the start and the end of a merged arbitrating window.

TTW[1]	TTW[0]	Description
0	0	Exclusive window (initial value)
0	1	Arbitrating window
1	0	Start of merged arbitrating window
1	1	End of merged arbitrating window

The first 16-bit area specifies the time that triggers the transmission of the message in cycle time. The second 16-bit area specifies the basic cycle in the system matrix where the transmission must start (Offset) and the frequency for periodic transmission. When the internal TTT register matches to the CYCTR value, and the internal Offset matches to CCR value transmission is attempted from the corresponding Mailbox. In order to enable this function, the CMAX (Cycle Maximum Register) must be set to a value different from 3'b111, the Timer (TCNTR) must be running (TTCR0 bit15 = 1), the corresponding MBC must be set to 3'b000 and the corresponding TXPR bit must be set. Once TXPR is set by S/W, this module does not clear the corresponding TXPR bit (among Mailbox-30 to 24) to carry on performing the periodic transmission. In order to stop the periodic transmission, TXPR must be cleared by TXCR. Please note that in this case it is possible that both TXACK and ABACK are set for the same Mailbox if TXACK is not cleared right after completion of transmission. Please refer to figure 23.7.

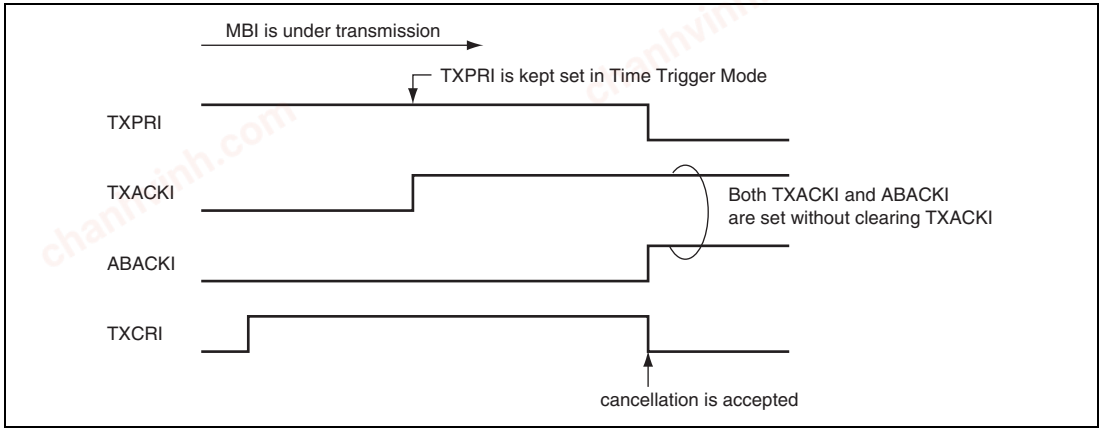

Figure 23.7 TXACK and ABACK in Time Trigger Transmission

chanhvinh.com

Please note that for Mailbox 30 TTW is fixed to '01', Offset to '00' and rep_factor to ‘0’.The following tables report the combinations for the rep_factor and the offset.

Rep_factor	Description
3'b000	Every basic cycle (initial value)
3'b001	Every two basic cycle
3'b010	Every four basic cycle
3'b011	Every eight basic cycle
3'b100	Every sixteen basic cycle
3'b101	Every thirty two basic cycle
3'b110	Every sixty four basic cycle (once in system matrix)
3'b111	Reserved

The Offset Field determines the first cycle in which a Time Triggered Mailbox may start transmitting its Message.

Offset	Description
6'b000000	Initial Offset = 1st Basic Cycle (initial value)
6'b000001	Initial Offset = 2nd Basic Cycles
6'b000010	Initial Offset = 3rd Basic Cycles
6'b000011	Initial Offset = 4th Basic Cycles
6'b000100	Initial Offset = 5th Basic Cycles
…	
…	
6'b111110	Initial Offset = 63rd Basic Cycles
6'b111111	Initial Offset = 64th Basic Cycles

The following relation must be maintained:

$$Cycle_Count_Maximum + 1 >= Repeat_Factor > Offset$$

$$Cycle_Count_Maximum = 2^{CMAX} - 1$$

$$Repeat_Factor = 2^{rep_factor}$$

chanhvinh.com

CMAX, Repeat_Factor, and Offset are register values

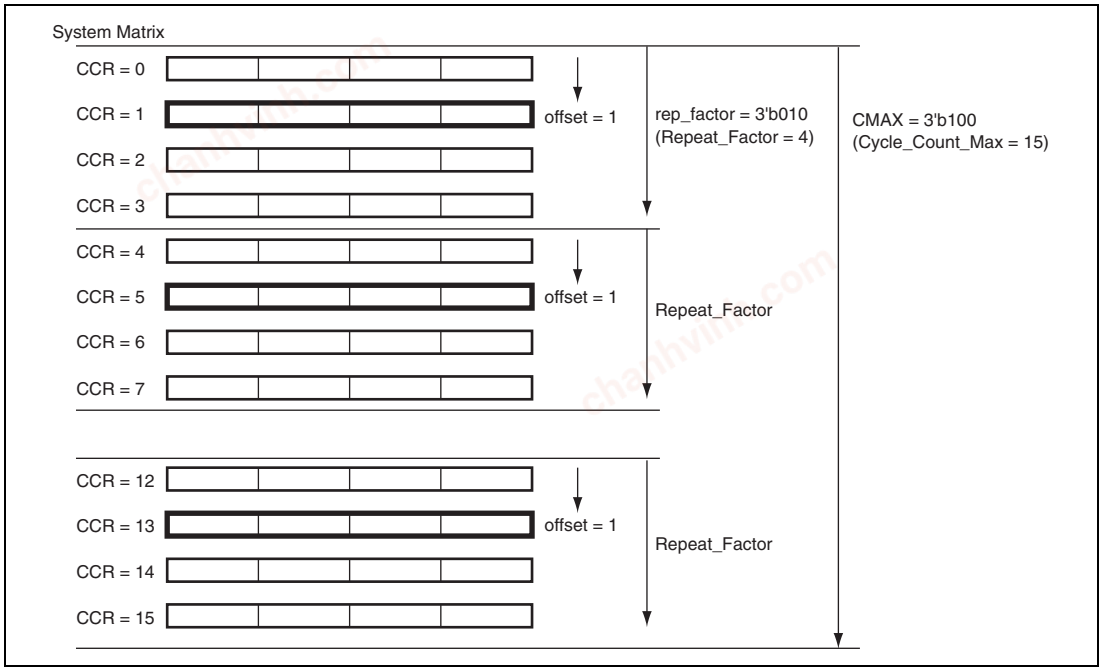

Figure 23.8 System Matrix

Tx-Trigger Times must be set in ascending order such that the difference between them satisfies the following condition.

TTT(mailbox i) –1 TTT(mailbox i-1) > TEW + Maximum frame length + 9

chanhvinh.com

23.3.3 Control Registers

The following sections describe control registers. The address is mapped as follow.

Important: These registers can only be accessed in Word size (16-bit).

Register Name	Address	Abbreviation	Access Size (bits)
Master Control Register	000	MCR	16
General Status Register	002	GSR	16
Bit Configuration Register 1	004	BCR1	16
Bit Configuration Register 0	006	BCR0	16
Interrupt Register	008	IRR	16
Interrupt Mask Register	00A	IMR	16
Error Counter Register	00C	TEC/REC	16

Figure 23.9 Control Registers

(1) Master Control Register (MCR)

The Master Control Register (MCR) is a 16-bit read/write register that controls this module.

- MCR (Address = H'000)

Bit:	15	14	13	12	11	10	9	8	7	6	5	4	3	2	1	0
	MCR15	MCR14	-	-	-	TST[2:0]			MCR7	MCR6	MCR5	-	-	MCR2	MCR1	MCR0
Initial value:	1	0	0	0	0	0	0	0	0	0	0	0	0	0	0	1
R/W:	R/W	R/W	R	R	R	R/W	R/W	R/W	R/W	R/W	R/W	R	R	R/W	R/W	R/W

Bit 15 — ID Reorder (MCR15): This bit changes the order of STDID, RTR, IDE and EXTID of both message control and LAFM.

Bit15: MCR15	Description
0	This module is the same as HCAN2
1	This module is not the same as HCAN2 (Initial value)

chanhvinh.com

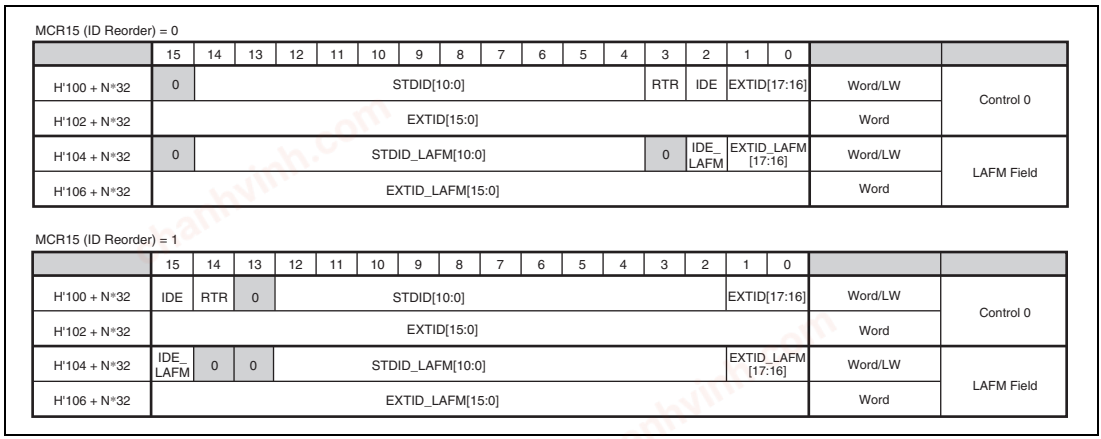

Figure 23.10 ID Reorder

This bit can be modified only in reset mode.

Bit 14 — Auto Halt Bus Off (MCR14): If both this bit and MCR6 are set, MCR1 is automatically set as soon as this module enters BusOff.

Bit14: MCR14	Description
0	This module remains in BusOff for normal recovery sequence (128 x 11 Recessive Bits) (Initial value)
1	This module moves directly into Halt Mode after it enters BusOff if MCR6 is set.

This bit can be modified only in reset mode.

Bit 13 — Reserved. The written value should always be ‘0’ and the returned value is '0'.

Bit 12 — Reserved. The written value should always be ‘0’ and the returned value is '0'.

Bit 11 — Reserved. The written value should always be ‘0’ and the returned value is '0'.

Bit 10 - 8 — Test Mode (TST[2:0]): This bit enables/disables the test modes. Please note that before activating the Test Mode it is requested to move this module into Halt mode or Reset mode. This is to avoid that the transition to Test Mode could affect a transmission/reception in progress. For details, please refer to section 23.4.1, Test Mode Settings.

Please note that the test modes are allowed only for diagnosis and tests and not when this module is used in normal operation.

chanhvinh.com

Bit10: TST2	Bit9: TST1	Bit8: TST0	Description
0	0	0	Normal Mode (initial value)
0	0	1	Listen-Only Mode (Receive-Only Mode)
0	1	0	Self Test Mode 1 (External)
0	1	1	Self Test Mode 2 (Internal)
1	0	0	Write Error Counter
1	0	1	Error Passive Mode
1	1	0	Setting prohibited
1	1	1	Setting prohibited

Bit 7 — Auto-wake Mode (MCR7): MCR7 enables or disables the Auto-wake mode. If this bit is set, this module automatically cancels the sleep mode (MCR5) by detecting CAN bus activity (dominant bit). If MCR7 is cleared this module does not automatically cancel the sleep mode.

This module cannot store the message that wakes it up.

Note: This bit can be modified only Reset or Halt mode.

Bit7: MCR7	Description
0	Auto-wake by CAN bus activity disabled (Initial value)
1	Auto-wake by CAN bus activity enabled

Bit 6 — Halt during Bus Off (MCR6): MCR6 enables or disables entering Halt mode immediately when MCR1 is set during Bus Off. This bit can be modified only in Reset or Halt mode. Please note that when Halt is entered in Bus Off the CAN engine is also recovering immediately to Error Active mode.

Bit6: MCR6	Description
0	If MCR[1] is set, this module will not enter Halt mode during Bus Off but wait up to end of recovery sequence (Initial value)
1	Enter Halt mode immediately during Bus Off if MCR[1] or MCR[14] are asserted.

chanhvinh.com

Bit 5 — Sleep Mode (MCR5): Enables or disables Sleep mode transition. If this bit is set, while this module is in halt mode, the transition to sleep mode is enabled. Setting MCR5 is allowed after entering Halt mode. The two Error Counters (REC, TEC) will remain the same during Sleep mode. This mode will be exited in two ways:

1. by writing a '0' to this bit position,
2. or, if MCR[7] is enabled, after detecting a dominant bit on the CAN bus.

If Auto wake up mode is disabled, this module will ignore all CAN bus activities until the sleep mode is terminated. When leaving this mode this module will synchronise to the CAN bus (by checking for 11 recessive bits) before joining CAN Bus activity. This means that, when the No.2 method is used, this module will miss the first message to receive. CAN transceivers stand-by mode will also be unable to cope with the first message when exiting stand by mode, and the S/W needs to be designed in this manner.

In sleep mode only the following registers can be accessed: MCR, GSR, IRR and IMR.

Important: This module is required to be in Halt mode before requesting to enter in Sleep mode. That allows the CPU to clear all pending interrupts before entering sleep mode. Once all interrupts are cleared this module must leave the Halt mode and enter Sleep mode simultaneously (by writing MCR[5] = 1 and MCR[1] = 0 at the same time).

Bit 5: MCR5	Description
0	This module sleep mode released (Initial value)
1	Transition to this module sleep mode enabled

Bit 4 — Reserved. The written value should always be '0' and the returned value is '0'.

Bit 3 — Reserved. The written value should always be '0' and the returned value is '0'.

Bit 2 — Message Transmission Priority (MCR2): MCR2 selects the order of transmission for pending transmit data. If this bit is set, pending transmit data are sent in order of the bit position in the Transmission Pending Register (TXPR). The order of transmission starts from Mailbox-31 as the highest priority, and then down to Mailbox-1 (if those mailboxes are configured for transmission). Please note that this feature cannot be used for time trigger transmission of the Mailboxes 24 to 30.

If MCR2 is cleared, all messages for transmission are queued with respect to their priority (by running internal arbitration). The highest priority message has the Arbitration Field (STDID + IDE bit + EXTID (if IDE = 1) + RTR bit) with the lowest digital value and is transmitted first. The internal arbitration includes the RTR bit and the IDE bit (internal arbitration works in the same

chanhvinh.com

way as the arbitration on the CAN Bus between two CAN nodes starting transmission at the same time).

This bit can be modified only in Reset or Halt mode.

Bit 2: MCR2	Description
0	Transmission order determined by message identifier priority (Initial value)
1	Transmission order determined by mailbox number priority (Mailbox-31 → Mailbox-1)

Bit 1—Halt Request (MCR1): Setting the MCR1 bit causes the CAN controller to complete its current operation and then enter Halt mode (where it is cut off from the CAN bus). This module remains in Halt Mode until the MCR1 is cleared. During the Halt mode, the CAN Interface does not join the CAN bus activity and does not store messages or transmit messages. All the user registers (including Mailbox contents and TEC/REC) remain unchanged with the exception of IRR0 and GSR4 which are used to notify the halt status itself. If the CAN bus is in idle or intermission state regardless of MCR6, this module will enter Halt Mode within one Bit Time. If MCR6 is set, a halt request during Bus Off will be also processed within one Bit Time. Otherwise the full Bus Off recovery sequence will be performed beforehand. Entering the Halt Mode can be notified by IRR0 and GSR4.

If both MCR14 and MCR6 are set, MCR1 is automatically set as soon as this module enters BusOff.

In the Halt mode, this module configuration can be modified with the exception of the Bit Timing setting, as it does not join the bus activity. MCR[1] has to be cleared by writing a '0' in order to re-join the CAN bus. After this bit has been cleared, this module waits until it detects 11 recessive bits, and then joins the CAN bus.

Notes: 1. After issuing a Halt request the CPU is not allowed to set TXPR or TXCR or clear MCR1 until the transition to Halt mode is completed (notified by IRR0 and GSR4). After MCR1 is set this can be cleared only after entering Halt mode or through a reset operation (SW or HW).
2. Transition into or recovery from HALT mode, is only possible if the BCR1 and BCR0 registers are configured to a proper Baud Rate.

Bit 1: MCR1	Description
0	Clear Halt request (Initial value)
1	Halt mode transition request

chanhvinh.com

Bit 0 — Reset Request (MCR0): Controls resetting of this module. When this bit is changed from '0' to '1' this module controller enters its reset routine, re-initialising the internal logic, which then sets GSR3 and IRR0 to notify the reset mode. During a re-initialisation, all user registers are initialised.

This module can be re-configured while this bit is set. This bit has to be cleared by writing a '0' to join the CAN bus. After this bit is cleared, this module waits until it detects 11 recessive bits, and then joins the CAN bus. The Baud Rate needs to be set up to a proper value in order to sample the value on the CAN Bus.

After Power On Reset, this bit and GSR3 are always set. This means that a reset request has been made and this module needs to be configured.

The Reset Request is equivalent to a Power On Reset but controlled by Software.

Bit 0: MCR0	Description
0	Clear Reset Request
1	CAN Interface reset mode transition request (Initial value)

(2) General Status Register (GSR)

The General Status Register (GSR) is a 16-bit read-only register that indicates the status of this module.

- GSR (Address = H'002)

Bit:	15	14	13	12	11	10	9	8	7	6	5	4	3	2	1	0
	-	-	-	-	-	-	-	-	-	-	GSR5	GSR4	GSR3	GSR2	GSR1	GSR0
Initial value:	0	0	0	0	0	0	0	0	0	0	0	0	1	1	0	0
R/W:	R	R	R	R	R	R	R	R	R	R	R	R	R	R	R	R

Bits 15 to 6: Reserved. The written value should always be '0' and the returned value is '0'.

Bit 5 — Error Passive Status Bit (GSR5): Indicates whether the CAN Interface is in Error Passive or not. This bit will be set high as soon as this module enters the Error Passive state and is cleared when the module enters again the Error Active state (this means the GSR5 will stay high during Error Passive and during Bus Off). Consequently to find out the correct state both GSR5 and GSR0 must be considered.

chanhvinh.com

Bit 5: GSR5	Description
0	This module is not in Error Passive or in Bus Off status (Initial value) [Reset condition] This module is in Error Active state
1	This module is in Error Passive (if GSR0 = 0) or Bus Off (if GSR0 = 1) [Setting condition] When TEC • 128 or REC • 128 or if Error Passive Test Mode is selected

Bit 4 — Halt/Sleep Status Bit (GSR4): Indicates whether the CAN engine is in the halt/sleep state or not. Please note that the clearing time of this flag is not the same as the setting time of IRR12.

Please note that this flag reflects the status of the CAN engine and not of the full this module IP. This module exits sleep mode and can be accessed once MCR5 is cleared. The CAN engine exits sleep mode only after two additional transmission clocks on the CAN Bus.

Bit 4: GSR4	Description
0	This module is not in the Halt state or Sleep state (Initial value)
1	Halt mode (if MCR1 = 1) or Sleep mode (if MCR5 = 1) [Setting condition] If MCR1 is set and the CAN bus is either in intermission or idle or MCR5 is set and this module is in the halt mode or this module is moving to Bus Off when MCR14 and MCR6 are both set

Bit 3 — Reset Status Bit (GSR3): Indicates whether this module is in the reset state or not.

Bit 3: GSR3	Description
0	This module is not in the reset state
1	Reset state (Initial value) [Setting condition] After an internal reset of this module (due to SW or HW reset)

chanhvinh.com

Bit 2 — Message Transmission in progress Flag (GSR2): Flag that indicates to the CPU if this module is in Bus Off or transmitting a message or an error/overload flag due to error detected during transmission. The timing to set TXACK is different from the time to clear GSR2. TXACK is set at the 7th bit of End Of Frame. GSR2 is set at the 3rd bit of intermission if there are no more messages ready to be transmitted. It is also set by arbitration lost, bus idle, reception, reset or halt transition.

Bit 2: GSR2	Description
0	This module is in Bus Off or a transmission is in progress
1	[Setting condition] Not in Bus Off and no transmission in progress (Initial value)

Bit 1—Transmit/Receive Warning Flag (GSR1): Flag that indicates an error warning.

Bit 1: GSR1	Description
0	[Reset condition] When (TEC < 96 and REC < 96) or Bus Off (Initial value)
1	[Setting condition] When 96 ≤ TEC < 256 or 96 ≤ REC < 256

Note: REC is incremented during Bus Off to count the recurrences of 11 recessive bits as requested by the Bus Off recovery sequence. However the flag GSR1 is not set in Bus Off.

Bit 0—Bus Off Flag (GSR0): Flag that indicates that this module is in the bus off state.

Bit 0: GSR0	Description
0	[Reset condition] Recovery from bus off state or after a HW or SW reset (Initial value)
1	[Setting condition] When TEC ≥ 256 (bus off state)

Note: Only the lower 8 bits of TEC are accessible from the user interface. The 9th bit is equivalent to GSR0.

chanhvinh.com

(3) Bit Configuration Register (BCR0, BCR1)

The bit configuration registers (BCR0 and BCR1) are 2 X 16-bit read/write register that are used to set CAN bit timing parameters and the baud rate pre-scaler for the CAN Interface.

The Time quanta is defined as:

$$Timequanta = \frac{2 * BRP}{f_{clk}}$$

Where: BRP (Baud Rate Pre-scaler) is the value stored in BCR0 incremented by 1 and fclk is the used peripheral clock 0 frequency.

- BCR1 (Address = H'004)

Bit:	15	14	13	12	11	10	9	8	7	6	5	4	3	2	1	0
	TSG1[3:0]				-	TSG2[2:0]			-	-	SJW[1:0]		-	-	-	BSP
Initial value:	0	0	0	0	0	0	0	0	0	0	0	0	0	0	0	0
R/W:	R/W	R/W	R/W	R/W	R	R/W	R/W	R/W	R	R	R/W	R/W	R	R	R	R/W

Bits 15 to 12 — Time Segment 1 (TSG1[3:0] = BCR1[15:12]): These bits are used to set the segment TSEG1 (= PRSEG + PHSEG1) to compensate for edges on the CAN Bus with a positive phase error. A value from 4 to 16 time quanta can be set.

Bit 15: TSG1[3]	Bit 14: TSG1[2]	Bit 13: TSG1[1]	Bit 12: TSG1[0]	Description
0	0	0	0	Setting prohibited (Initial value)
0	0	0	1	Setting prohibited
0	0	1	0	Setting prohibited
0	0	1	1	PRSEG + PHSEG1 = 4 time quanta
0	1	0	0	PRSEG + PHSEG1 = 5 time quanta
:	:	:	:	:
:	:	:	:	:
1	1	1	1	PRSEG + PHSEG1 = 16 time quanta

Bit 11: Reserved. The written value should always be '0' and the returned value is '0'.

chanhvinh.com

Bits 10 to 8 — Time Segment 2 (TSG2[2:0] = BCR1[10:8]): These bits are used to set the segment TSEG2 (= PHSEG2) to compensate for edges on the CAN Bus with a negative phase error. A value from 2 to 8 time quanta can be set as shown below.

Bit 10: TSG2[2]	Bit 9: TSG2[1]	Bit 8: TSG2[0]	Description
0	0	0	Setting prohibited (Initial value)
0	0	1	PHSEG2 = 2 time quanta (conditionally prohibited)
0	1	0	PHSEG2 = 3 time quanta
0	1	1	PHSEG2 = 4 time quanta
1	0	0	PHSEG2 = 5 time quanta
1	0	1	PHSEG2 = 6 time quanta
1	1	0	PHSEG2 = 7 time quanta
1	1	1	PHSEG2 = 8 time quanta

Bits 7 and 6: Reserved. The written value should always be '0' and the returned value is '0'.

Bits 5 and 4 - ReSynchronisation Jump Width (SJW[1:0] = BCR0[5:4]): These bits set the synchronisation jump width.

Bit 5: SJW[1]	Bit 4: SJW[0]	Description
0	0	Synchronisation Jump width = 1 time quantum (Initial value)
0	1	Synchronisation Jump width = 2 time quanta
1	0	Synchronisation Jump width = 3 time quanta
1	1	Synchronisation Jump width = 4 time quanta

Bits 3 to 1: Reserved. The written value should always be '0' and the returned value is '0'.

Bit 0 — Bit Sample Point (BSP = BCR1[0]): Sets the point at which data is sampled.

Bit 0 : BSP	Description
0	Bit sampling at one point (end of time segment 1) (Initial value)
1	Bit sampling at three points (rising edge of the last three clock cycles of PHSEG1)

chanhvinh.com

- BCR0 (Address = H'006)

Bit:	15	14	13	12	11	10	9	8	7	6	5	4	3	2	1	0
	-	-	-	-	-	-	-	-	BRP[7:0]							
Initial value:	0	0	0	0	0	0	0	0	0	0	0	0	0	0	0	0
R/W:	R	R	R	R	R	R	R	R	R/W	R/W	R/W	R/W	R/W	R/W	R/W	R/W

Bits 8 to 15: Reserved. The written value should always be '0' and the returned value is '0'.

Bits 7 to 0—Baud Rate Pre-scale (BRP[7:0] = BCR0 [7:0]): These bits are used to define the peripheral clock 0 periods contained in a Time Quantum.

Bit 7: BRP[7]	Bit 6: BRP[6]	Bit 5: BRP[5]	Bit 4: BRP[4]	Bit 3: BRP[3]	Bit 2: BRP[2]	Bit 1: BRP[1]	Bit 0: BRP[0]	Description
0	0	0	0	0	0	0	0	2 X peripheral clock 0 (Initial value)
0	0	0	0	0	0	0	1	4 X peripheral clock 0
0	0	0	0	0	0	1	0	6 X peripheral clock 0
: :	: :	: :	: :	: :	: :	: :	: :	2*(register value + 1) X peripheral clock 0
1	1	1	1	1	1	1	1	512 X peripheral clock 0

- Requirements of Bit Configuration Register

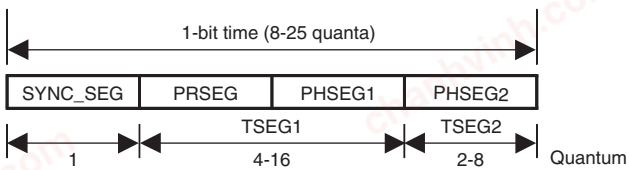

SYNC_SEG: Segment for establishing synchronisation of nodes on the CAN bus. (Normal bit edge transitions occur in this segment.)

PRSEG: Segment for compensating for physical delay between networks.

PHSEG1: Buffer segment for correcting phase drift (positive). (This segment is extended when synchronisation (resynchronisation) is established.)

PHSEG2: Buffer segment for correcting phase drift (negative). (This segment is shortened when synchronisation (resynchronisation) is established)

TSEG1: TSG1 + 1

chanhvinh.com

TSEG2: TSG2 + 1

The Bit Rate Calculation is:

$$\text{Bit Rate} = \frac{f_{clk}}{2 \times (BRP + 1) \times (TSEG1 + TSEG2 + 1)}$$

Where BRP is given by the register value and TSEG1 and TSEG2 are derived values from TSG1 and TSG2 register values. The '+1' in the above formula is for the Sync-Seg which duration is 1 time quanta.

f_{CLK} = Peripheral clock 0

BCR Setting Constraints

TSEG1min > TSEG2 ≥ SJWmax (SJW = 1 to 4)

8 ≤ TSEG1 + TSEG2 + 1 ≤ 25 time quanta (TSEG1 + TSEG2 + 1 = 7 is not allowed)

TSEG2 ≥ 2

These constraints allow the setting range shown in the table below for TSEG1 and TSEG2 in the Bit Configuration Register. The number in the table shows possible setting of SJW. "No" shows that there is no allowed combination of TSEG1 and TSEG2.

chanhvinh.com

		001	010	011	100	101	110	111	TSG2
		2	3	4	5	6	7	8	TSEG2
TSG1	TSEG1								
0011	4	No	1-3	No	No	No	No	No	
0100	5	1-2	1-3	1-4	No	No	No	No	
0101	6	1-2	1-3	1-4	1-4	No	No	No	
0110	7	1-2	1-3	1-4	1-4	1-4	No	No	
0111	8	1-2	1-3	1-4	1-4	1-4	1-4	No	
1000	9	1-2	1-3	1-4	1-4	1-4	1-4	1-4	
1001	10	1-2	1-3	1-4	1-4	1-4	1-4	1-4	
1010	11	1-2	1-3	1-4	1-4	1-4	1-4	1-4	
1011	12	1-2	1-3	1-4	1-4	1-4	1-4	1-4	
1100	13	1-2	1-3	1-4	1-4	1-4	1-4	1-4	
1101	14	1-2	1-3	1-4	1-4	1-4	1-4	1-4	
1110	15	1-2	1-3	1-4	1-4	1-4	1-4	1-4	
1111	16	1-2	1-3	1-4	1-4	1-4	1-4	1-4	

Example 1: To have a Bit rate of 250 Kbps with a frequency of fclk = 25 MHz it is possible to set: BRP = 4, TSEG1 = 5, TSEG2 = 4.

Then the configuration to write is BCR1 = H'4300 and BCR0 = H'0004.

Example 2: To have a Bit rate of 500 Kbps with a frequency of fclk = 33 MHz it is possible to set: BRP = 2, TSEG1 = 6, TSEG2 = 4.

Then the configuration to write is BCR1 = H'5300 and BCR0 = H'0002.

chanhvinh.com

(4) Interrupt Request Register (IRR)

The interrupt register (IRR) is a 16-bit read/write-clearable register containing status flags for the various interrupt sources.

- IRR (Address = H'008)

Bit:	15	14	13	12	11	10	9	8	7	6	5	4	3	2	1	0
	IRR15	IRR14	IRR13	IRR12	IRR11	IRR10	IRR9	IRR8	IRR7	IRR6	IRR5	IRR4	IRR3	IRR2	IRR1	IRR0
Initial value:	0	0	0	0	0	0	0	0	0	0	0	0	0	0	0	1
R/W:	R/W	R/W	R/W	R/W	R/W	R/W	R	R	R/W	R/W	R/W	R/W	R/W	R	R	R/W

Bit 15 — Timer Compare Match Interrupt 1 (IRR15): Indicates that a Compare-Match condition occurred to the Timer Compare Match Register 1 (TCMR1). When the value set in the TCMR1 matches to Cycle Time (TCMR1 = CYCTR), this bit is set.

Bit 15: IRR15	Description
0	Timer Compare Match has not occurred to the TCMR1 (Initial value) [Clearing condition] Writing 1
1	Timer Compare Match has occurred to the TCMR1 [Setting condition] TCMR1 matches to Cycle Time (TCMR1 = CYCTR)

Bit 14 — Timer Compare Match Interrupt 0 (IRR14): Indicates that a Compare-Match condition occurred to the Timer Compare Match Register 0 (TCMR0). When the value set in the TCMR0 matches to Local Time (TCMR0 = TCNTR), this bit is set.

Bit 14: IRR14	Description
0	Timer Compare Match has not occurred to the TCMR0 (Initial value) [Clearing condition] Writing 1
1	Timer Compare Match has occurred to the TCMR0 [Setting condition] TCMR0 matches to the Timer value (TCMR0 = TCNTR)

Bit 13 - Timer Overrun Interrupt/Next_is_Gap Reception Interrupt/Message Error Interrupt (IRR13): This interrupt assumes a different meaning depending on this module mode. It indicates that:

— The Timer (TCNTR) has overrun when this module is working in event-trigger mode (including test modes)

chanhvinh.com

— Time reference message with Next_is_Gap set has been received when working in time-trigger mode. Please note that when a Next_is_Gap is received the application is responsible to stop all transmission at the end of the current basic cycle (including test modes)

— Message error has occurred when in test mode. Note: If a Message Overload condition occurs when in Test Mode, then this bit will not be set.

Bit 13: IRR13	Description
0	Timer (TCNTR) has not overrun in event-trigger mode (including test modes) (Initial value) Time reference message with Next_is_Gap has not been received in time-trigger mode (including test modes) Message error has not occurred in test mode [Clearing condition] Writing 1
1	[Setting condition] Timer (TCNTR) has overrun and changed from H'FFFF to H'0000 in event-trigger mode (including test modes) Time reference message with Next_is_Gap has been received in time-trigger mode (including test modes) Message error has occurred in test mode

Bit 12 – Bus activity while in sleep mode (IRR12): IRR12 indicates that a CAN bus activity is present. While this module is in sleep mode and a dominant bit is detected on the CAN bus, this bit is set. This interrupt is cleared by writing a '1' to this bit position. Writing a '0' has no effect. If auto wakeup is not used and this interrupt is not requested it needs to be disabled by the related interrupt mask register. If auto wake up is not used and this interrupt is requested it should be cleared only after recovering from sleep mode. This is to avoid that a new falling edge of the reception line causes the interrupt to get set again.

Please note that the setting time of this interrupt is different from the clearing time of GSR4.

Bit 12: IRR12	Description
0	Bus idle state (Initial value) [Clearing condition] Writing 1
1	CAN bus activity detected in this module sleep mode [Setting condition] Dominant bit level detection on the Rx line while in sleep mode

chanhvinh.com

Bit 11 — Timer Compare Match Interrupt 2 (IRR11): Indicates that a Compare-Match condition occurred to the Timer Compare Match Register 2 (TCMR2). When the value set in the TCMR2 matches to Cycle Time (TCMR2 = CYCTR), this bit is set.

Bit 11: IRR11	Description
0	Timer Compare Match has not occurred to the TCMR2 (initial value) [Clearing condition] Writing 1
1	Timer Compare Match has occurred to the TCMR2 [Setting condition] TCMR2 matches to Cycle Time (TCMR2 = CYCTR)

Bit 10 — Start of new system matrix Interrupt (IRR10): Indicates that a new system matrix is starting.

When CCR = 0, this bit is set at the successful completion of reception/transmission of time reference message. Please note that when CMAX = 0 this interrupt is set at every basic cycle.

Bit 10: IRR10	Description
0	A new system matrix is not starting (initial value) [Clearing condition] Writing 1
1	Cycle counter reached zero. [Setting condition] Reception/transmission of time reference message is successfully completed when CMAX!= 3'b111 and CCR = 0

Bit 9 – Message Overrun/Overwrite Interrupt Flag (IRR9): Flag indicating that a message has been received but the existing message in the matching Mailbox has not been read as the corresponding RXPR or RFPR is already set to '1' and not yet cleared by the CPU. The received message is either abandoned (overrun) or overwritten dependant upon the NMC (New Message Control) bit. This bit is cleared when all bit in UMSR (Unread Message Status Register) are cleared (by writing '1') or by setting MBIMR (MailBox interrupt Mast Register) for all UMSR flag set. It is also cleared by writing a '1' to all the correspondent bit position in MBIMR. Writing to this bit position has no effect.

chanhvinh.com

Bit 9: IRR9	Description
0	No pending notification of message overrun/overwrite [Clearing condition] Clearing of all bit in UMSR/setting MBIMR for all UMSR set (initial value)
1	A receive message has been discarded due to overrun condition or a message has been overwritten [Setting condition] Message is received while the corresponding RXPR and/or RFPR = 1 and MBIMR = 0

Bit 8 - Mailbox Empty Interrupt Flag (IRR8): This bit is set when one of the messages set for transmission has been successfully sent (corresponding TXACK flag is set) or has been successfully aborted (corresponding ABACK flag is set). In Event Triggered mode the related TXPR is also cleared and this mailbox is now ready to accept a new message data for the next transmission. In Time Trigger mode TXPR for the Mailboxes from 30 to 24 is not cleared after a successful transmission in order to keep transmitting at each programmed basic cycle. In effect, this bit is set by an OR'ed signal of the TXACK and ABACK bits not masked by the corresponding MBIMR flag. Therefore, this bit is automatically cleared when all the TXACK and ABACK bits are cleared. It is also cleared by writing a '1' to all the correspondent bit position in MBIMR. Writing to this bit position has no effect.

Bit 8: IRR8	Description
0	Messages set for transmission or transmission cancellation request NOT progressed. (Initial value) [Clearing Condition] All the TXACK and ABACK bits are cleared/setting MBIMR for all TXACK and ABACK set
1	Message has been transmitted or aborted, and new message can be stored (in TT mode Mailbox 24 to 30 can be programmed with a new message only in case of abortion) [Setting condition] When a TXACK or ABACK bit is set (if related MBIMR = 0).

chanhvinh.com

Bit 7 - Overload Frame (IRR7): Flag indicating that this module has detected a condition that should initiate the transmission of an overload frame. Note that in the condition of transmission being prevented, such as listen only mode, an Overload Frame will NOT be transmitted, but IRR7 will still be set. IRR7 remains asserted until reset by writing a '1' to this bit position - writing a '0' has no effect.

Bit 7: IRR7	Description
0	[Clearing condition] Writing 1 (Initial value)
1	[Setting conditions] Overload condition detected

Bit 6 - Bus Off Interrupt Flag (IRR6): This bit is set when this module enters the Bus-off state or when this module leaves Bus-off and returns to Error-Active. The cause therefore is the existing condition TEC ≥ 256 at the node or the end of the Bus-off recovery sequence (128X11 consecutive recessive bits) or the transition from Bus Off to Halt (automatic or manual). This bit remains set even if this module node leaves the bus-off condition, and needs to be explicitly cleared by S/W. The S/W is expected to read the GSR0 to judge whether this module is in the bus-off or error active status. It is cleared by writing a '1' to this bit position even if the node is still bus-off. Writing a '0' has no effect.

Bit 6: IRR6	Description
0	[Clearing condition] Writing 1 (Initial value)
1	Enter Bus off state caused by transmit error or Error Active state returning from Bus-off [Setting condition] When TEC becomes ≥ 256 or End of Bus-off after 128X11 consecutive recessive bits or transition from Bus Off to Halt

Bit 5 - Error Passive Interrupt Flag (IRR5): Interrupt flag indicating the error passive state caused by the transmit or receive error counter or by Error Passive forced by test mode. This bit is reset by writing a '1' to this bit position, writing a '0' has no effect. If this bit is cleared the node may still be error passive. Please note that the SW needs to check GSR0 and GSR5 to judge whether this module is in Error Passive or Bus Off status.

Bit 5: IRR5	Description
0	[Clearing condition] Writing 1 (Initial value)
1	Error passive state caused by transmit/receive error [Setting condition] When TEC ≥ 128 or REC ≥ 128 or Error Passive test mode is used

chanhvinh.com

Bit 4 - Receive Error Counter Warning Interrupt Flag (IRR4): This bit becomes set if the receive error counter (REC) reaches a value greater than 95 when this module is not in the Bus Off status. The interrupt is reset by writing a '1' to this bit position, writing '0' has no effect.

Bit 4: IRR4	Description
0	[Clearing condition] Writing 1 (Initial value)
1	Error warning state caused by receive error [Setting condition] When REC ≥ 96 and this module is not in Bus Off

Bit 3 - Transmit Error Counter Warning Interrupt Flag (IRR3): This bit becomes set if the transmit error counter (TEC) reaches a value greater than 95. The interrupt is reset by writing a '1' to this bit position, writing '0' has no effect.

Bit 3: IRR3	Description
0	[Clearing condition] Writing 1 (Initial value)
1	Error warning state caused by transmit error [Setting condition] When TEC ≥ 96

Bit 2 - Remote Frame Receive Interrupt Flag (IRR2): Flag indicating that a remote frame has been received in a mailbox. This bit is set if at least one receive mailbox, with related MBIMR not set, contains a remote frame transmission request. This bit is automatically cleared when all bits in the Remote Frame Receive Pending Register (RFPR), are cleared. It is also cleared by writing a '1' to all the correspondent bit position in MBIMR. Writing to this bit has no effect.

Bit 2: IRR2	Description
0	[Clearing condition] Clearing of all bits in RFPR (Initial value)
1	At least one remote request is pending [Setting condition] When remote frame is received and the corresponding MBIMR = 0

Bit 1 – Data Frame Received Interrupt Flag (IRR1): IRR1 indicates that there are pending Data Frames received. If this bit is set at least one receive mailbox contains a pending message. This bit is cleared when all bits in the Data Frame Receive Pending Register (RXPR) are cleared, i.e. there is no pending message in any receiving mailbox. It is in effect a logical OR of the RXPR flags from each configured receive mailbox with related MBIMR not set. It is also cleared by writing a '1' to all the correspondent bit position in MBIMR. Writing to this bit has no effect.

chanhvinh.com

Bit 1: IRR1	Description
0	[Clearing condition] Clearing of all bits in RXPR (Initial value)
1	Data frame received and stored in Mailbox [Setting condition] When data is received and the corresponding MBIMR = 0

Bit 0 – Reset/Halt/Sleep Interrupt Flag (IRR0): This flag can get set for three different reasons. It can indicate that:

1. Reset mode has been entered after a SW (MCR0) or HW reset
2. Halt mode has been entered after a Halt request (MCR1)
3. Sleep mode has been entered after a sleep request (MCR5) has been made while in Halt mode.

The GSR may be read after this bit is set to determine which state this module is in.

Important: When a Sleep mode request needs to be made, the Halt mode must be used beforehand. Please refer to the MCR5 description and Figure 23.15 Halt Mode/Sleep Mode.

IRR0 is set by the transition from "0" to "1" of GSR3 or GSR4 or by transition from Halt mode to Sleep mode. So, IRR0 is not set if this module enters Halt mode again right after exiting from Halt mode, without GSR4 being cleared. Similarly, IRR0 is not set by direct transition from Sleep mode to Halt Request. At the transition from Halt/Sleep mode to Transition/Reception, clearing GSR4 needs (one-bit time - TSEG2) to (one-bit time * 2 - TSEG2).

In the case of Reset mode, IRR0 is set, however, the interrupt to the CPU is not asserted since IMR0 is automatically set by initialisation.

Bit 0: IRR0	Description
0	[Clearing condition] Writing 1
1	Transition to S/W reset mode or transition to halt mode or transition to sleep mode (Initial value) [Setting condition] When reset/halt/sleep transition is completed after a reset (MCR0 or HW) or Halt mode (MCR1) or Sleep mode (MCR5) is requested

chanhvinh.com

(5) Interrupt Mask Register (IMR)

The interrupt mask register is a 16 bit register that protects all corresponding interrupts in the Interrupt Request Register (IRR) from generating an output signal on the IRQ. An interrupt request is masked if the corresponding bit position is set to '1'. This register can be read or written at any time. The IMR directly controls the generation of IRQ, but does not prevent the setting of the corresponding bit in the IRR.

- IMR (Address = H'00A)

Bit:	15	14	13	12	11	10	9	8	7	6	5	4	3	2	1	0
	IMR15	IMR14	IMR13	IMR12	IMR11	IMR10	IMR9	IMR8	IMR7	IMR6	IMR5	IMR4	IMR3	IMR2	IMR1	IMR0
Initial value:	1	1	1	1	1	1	1	1	1	1	1	1	1	1	1	1
R/W:	R/W	R/W	R/W	R/W	R/W	R/W	R/W	R/W	R/W	R/W	R/W	R/W	R/W	R/W	R/W	R/W

Bit 15 to 0: Maskable interrupt sources corresponding to IRR[15:0] respectively. When a bit is set, the interrupt signal is not generated, although setting the corresponding IRR bit is still performed.

Bit[15:0]: IMRn	Description
0	Corresponding IRR is not masked (IRQ is generated for interrupt conditions)
1	Corresponding interrupt of IRR is masked (Initial value)

(6) Transmit Error Counter (TEC) and Receive Error Counter (REC)

The Transmit Error Counter (TEC) and Receive Error Counter (REC) is a 16-bit read/(write) register that functions as a counter indicating the number of transmit/receive message errors on the CAN Interface. The count value is stipulated in the CAN protocol specification Refs. [1], [2], [3] and [4]. When not in (Write Error Counter) test mode this register is read only, and can only be modified by the CAN Interface. This register can be cleared by a Reset request (MCR0) or entering to bus off.

In Write Error Counter test mode (i.e. TST[2:0] = 3'b100), it is possible to write to this register. The same value can only be written to TEC/REC, and the value written into TEC is set to TEC and REC. When writing to this register, this module needs to be put into Halt Mode. This feature is only intended for test purposes.

chanhvinh.com

- TEC/REC (Address = H'00C)

Bit:	15	14	13	12	11	10	9	8	7	6	5	4	3	2	1	0
	TEC7	TEC6	TEC5	TEC4	TEC3	TEC2	TEC1	TEC0	REC7	REC6	REC5	REC4	REC3	REC2	REC1	REC0
Initial value:	0	0	0	0	0	0	0	0	0	0	0	0	0	0	0	0
R/W:	R/W*	R/W*	R/W*	R/W*	R/W*	R/W*	R/W*	R/W*	R/W*	R/W*	R/W*	R/W*	R/W*	R/W*	R/W*	R/W*

Note: * It is only possible to write the value in test mode when TST[2:0] in MCR is 3'b100.
REC is incremented during Bus Off to count the recurrences of 11 recessive bits as requested by the Bus Off recovery sequence.

23.3.4 Mailbox Registers

The following sections describe Mailbox registers that control/flag individual Mailboxes. The address is mapped as follows.

Important: LongWord access is carried out as two consecutive Word accesses.

chanhvinh.com

32-Mailboxes version

Description	Address	Name	Access Size (bits)
Transmit Pending 1	020	TXPR1	LW
Transmit Pending 0	022	TXPR0	—
	024		
	026		
Transmit Cancel 1	028	TXCR1	Word/LW
Transmit Cancel 0	02A	TXCR0	Word
	02C		
	02E		
Transmit Acknowledge 1	030	TXACK1	Word/LW
Transmit Acknowledge 0	032	TXACK0	Word
	034		
	036		
Abort Acknowledge 1	038	ABACK1	Word/LW
Abort Acknowledge 0	03A	ABACK0	Word
	03C		
	03E		
Data Frame Receive Pending 1	040	RXPR1	Word/LW
Data Frame Receive Pending 0	042	RXPR0	Word
	044		
	046		
Remote Frame Receive Pending 1	048	RFPR1	Word/LW
Remote Frame Receive Pending 0	04A	RFPR0	Word
	04C		
	04E		
Mailbox Interrupt Mask Register 1	050	MBIMR1	Word/LW
Mailbox Interrupt Mask Register 0	052	MBIMR0	Word
	054		
	056		
Unread message Status Register 1	058	UMSR1	Word/LW
Unread message Status Register 0	05A	UMSR0	Word
	05C		
	05E		

Figure 23.11 Mailbox Registers

chanhvinh.com

(1) Transmit Pending Register (TXPR1, TXPR0)

The concatenation of TXPR1 and TXPR0 is a 32-bit register that contains any transmit pending flags for the CAN module. In the case of 16-bit bus interface, Long Word access is carried out as two consecutive word accesses.

<Longword Write Operation>

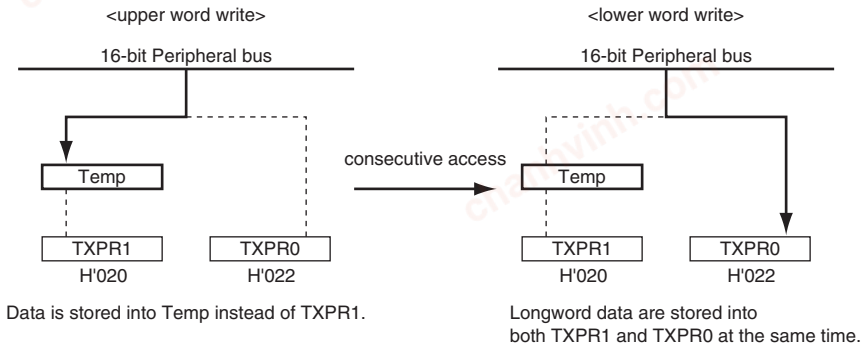

<Longword Read Operation>

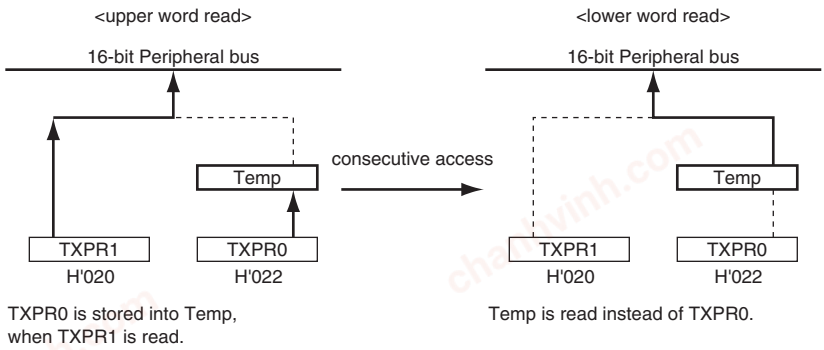

The TXPR1 controls Mailbox-31 to Mailbox-16, and the TXPR0 controls Mailbox-15 to Mailbox-1. The CPU may set the TXPR bits to affect any message being considered for transmission by writing a '1' to the corresponding bit location. Writing a '0' has no effect, and TXPR cannot be cleared by writing a '0' and must be cleared by setting the corresponding TXCR bits. TXPR may be read by the CPU to determine which, if any, transmissions are pending or in progress. In effect there is a transmit pending bit for all Mailboxes except for the Mailbox-0. Writing a '1' to a bit location when the mailbox is not configured to transmit is not allowed.

chanhvinh.com

In Event Triggered Mode this module will clear a transmit pending flag after successful transmission of its corresponding message or when a transmission abort is requested successfully from the TXCR. In Time Trigger Mode, TXPR for the Mailboxes from 30 to 24 is NOT cleared after a successful transmission, in order to keep transmitting at each programmed basic cycle. The TXPR flag is not cleared if the message is not transmitted due to the CAN node losing the arbitration process or due to errors on the CAN bus, and this module automatically tries to transmit it again unless its DART bit (Disable Automatic Re-Transmission) is set in the Message-Control of the corresponding Mailbox. In such case (DART set), the transmission is cleared and notified through Mailbox Empty Interrupt Flag (IRR8) and the correspondent bit within the Abort Acknowledgement Register (ABACK).

If the status of the TXPR changes, this module shall ensure that in the identifier priority scheme (MCR2 = 0), the highest priority message is always presented for transmission in an intelligent way even under circumstances such as bus arbitration losses or errors on the CAN bus. Please refer to the Application Note for details.

When this module changes the state of any TXPR bit position to a '0', an empty slot interrupt (IRR8) may be generated. This indicates that either a successful or an aborted mailbox transmission has just been made. If a message transmission is successful it is signalled in the TXACK register, and if a message transmission abortion is successful it is signalled in the ABACK register. By checking these registers, the contents of the Message of the corresponding Mailbox may be modified to prepare for the next transmission.

- TXPR1

Bit:	15	14	13	12	11	10	9	8	7	6	5	4	3	2	1	0
	TXPR1[15:0]															
Initial value:	0	0	0	0	0	0	0	0	0	0	0	0	0	0	0	0
R/W:	R/W*	R/W*	R/W*	R/W*	R/W*	R/W*	R/W*	R/W*	R/W*	R/W*	R/W*	R/W*	R/W*	R/W*	R/W*	R/W*

Note: * It is possible only to write a '1' for a Mailbox configured as transmitter.

Bit 15 to 0 — Requests the corresponding Mailbox to transmit a CAN Frame. The bit 15 to 0 corresponds to Mailbox-31 to 16 respectively. When multiple bits are set, the order of the transmissions is governed by the MCR2 – CAN-ID or Mailbox number.

chanhvinh.com

Bit[15:0]: TXPR1	Description
0	Transmit message idle state in corresponding mailbox (Initial value) [Clearing Condition] Completion of message transmission (for Event Triggered Messages) or message transmission abortion (automatically cleared)
1	Transmission request made for corresponding mailbox

- TXPR0

Bit:	15	14	13	12	11	10	9	8	7	6	5	4	3	2	1	0
	TXPR0[15:1]															-
Initial value:	0	0	0	0	0	0	0	0	0	0	0	0	0	0	0	0
R/W:	R/W*	R/W*	R/W*	R/W*	R/W*	R/W*	R/W*	R/W*	R/W*	R/W*	R/W*	R/W*	R/W*	R/W*	R/W*	R

Note: * It is possible only to write a '1' for a Mailbox configured as transmitter.

Bit 15 to 1 — Indicates that the corresponding Mailbox is requested to transmit a CAN Frame. The bit 15 to 1 corresponds to Mailbox-15 to 1 respectively. When multiple bits are set, the order of the transmissions is governed by the MCR2 – CAN-ID or Mailbox number.

Bit[15:1]: TXPR0	Description
0	Transmit message idle state in corresponding mailbox (Initial value) [Clearing Condition] Completion of message transmission (for Event Triggered Messages) or message transmission abortion (automatically cleared)
1	Transmission request made for corresponding mailbox

Bit 0— Reserved: This bit is always '0' as this is a receive-only Mailbox. Writing a '1' to this bit position has no effect. The returned value is '0'.

chanhvinh.com

(2) Transmit Cancel Register (TXCR1, TXCR0)

The TXCR1 and TXCR0 are 16-bit read/conditionally-write registers. The TXCR1 controls Mailbox-31 to Mailbox-16, and the TXCR0 controls Mailbox-15 to Mailbox-1.This register is used by the CPU to request the pending transmission requests in the TXPR to be cancelled. To clear the corresponding bit in the TXPR the CPU must write a '1' to the bit position in the TXCR. Writing a '0' has no effect.

When an abort has succeeded the CAN controller clears the corresponding TXPR + TXCR bits, and sets the corresponding ABACK bit. However, once a Mailbox has started a transmission, it cannot be cancelled by this bit. In such a case, if the transmission finishes in success, the CAN controller clears the corresponding TXPR + TXCR bit, and sets the corresponding TXACK bit, however, if the transmission fails due to a bus arbitration loss or an error on the bus, the CAN controller clears the corresponding TXPR + TXCR bit, and sets the corresponding ABACK bit. If an attempt is made by the CPU to clear a mailbox transmission that is not transmit-pending it has no effect. In this case the CPU will be not able at all to set the TXCR flag.

- TXCR1

Bit:	15	14	13	12	11	10	9	8	7	6	5	4	3	2	1	0
	TXCR1[15:0]															
Initial value:	0	0	0	0	0	0	0	0	0	0	0	0	0	0	0	0
R/W:	R/W*	R/W*	R/W*	R/W*	R/W*	R/W*	R/W*	R/W*	R/W*	R/W*	R/W*	R/W*	R/W*	R/W*	R/W*	R/W*

Note: * Only writing a ‘1’ to a Mailbox that is requested for transmission and is configured as transmit.

Bit 15 to 0 — Requests the corresponding Mailbox, that is in the queue for transmission, to cancel its transmission. The bit 15 to 0 corresponds to Mailbox-31 to 16 (and TXPR1[15:0]) respectively.

Bit[15:0]:TXCR1	Description
0	Transmit message cancellation idle state in corresponding mailbox (Initial value) [Clearing Condition] Completion of transmit message cancellation (automatically cleared)
1	Transmission cancellation request made for corresponding mailbox

chanhvinh.com

- TXCR0

Bit:	15	14	13	12	11	10	9	8	7	6	5	4	3	2	1	0
	TXCR0[15:1]															-
Initial value:	0	0	0	0	0	0	0	0	0	0	0	0	0	0	0	0
R/W:	R/W*	R/W*	R/W*	R/W*	R/W*	R/W*	R/W*	R/W*	R/W*	R/W*	R/W*	R/W*	R/W*	R/W*	R/W*	R

Note: * Only writing a '1' to a Mailbox that is requested for transmission and is configured as transmit.

Bit 15 to 1 — Requests the corresponding Mailbox, that is in the queue for transmission, to cancel its transmission. The bit 15 to 1 corresponds to Mailbox-15 to 1 (and TXPR0[15:1]) respectively.

Bit[15:1]: TXCR0	Description
0	Transmit message cancellation idle state in corresponding mailbox (Initial value) [Clearing Condition] Completion of transmit message cancellation (automatically cleared)
1	Transmission cancellation request made for corresponding mailbox

Bit 0 — This bit is always '0' as this is a receive-only mailbox. Writing a '1' to this bit position has no effect and always read back as a ‘0’.

(3) Transmit Acknowledge Register (TXACK1, TXACK0)

The TXACK1 and TXACK0 are 16-bit read/conditionally-write registers. These registers are used to signal to the CPU that a mailbox transmission has been successfully made. When a transmission has succeeded this module sets the corresponding bit in the TXACK register. The CPU may clear a TXACK bit by writing a '1' to the corresponding bit location. Writing a '0' has no effect.

- TXACK1

Bit:	15	14	13	12	11	10	9	8	7	6	5	4	3	2	1	0
	TXACK1[15:0]															
Initial value:	0	0	0	0	0	0	0	0	0	0	0	0	0	0	0	0
R/W:	R/W*	R/W*	R/W*	R/W*	R/W*	R/W*	R/W*	R/W*	R/W*	R/W*	R/W*	R/W*	R/W*	R/W*	R/W*	R/W*

Note: * Only when writing a '1' to clear.

chanhvinh.com

Bit 15 to 0 — Notifies that the requested transmission of the corresponding Mailbox has been finished successfully. The bit 15 to 0 corresponds to Mailbox-31 to 16 respectively.

Bit[15:0]:TXACK1	Description
0	[Clearing Condition] Writing '1' (Initial value)
1	Corresponding Mailbox has successfully transmitted message (Data or Remote Frame) [Setting Condition] Completion of message transmission for corresponding mailbox

- TXACK0

Bit:	15	14	13	12	11	10	9	8	7	6	5	4	3	2	1	0
	TXACK0[15:1]															-
Initial value:	0	0	0	0	0	0	0	0	0	0	0	0	0	0	0	0
R/W:	R/W*	R/W*	R/W*	R/W*	R/W*	R/W*	R/W*	R/W*	R/W*	R/W*	R/W*	R/W*	R/W*	R/W*	R/W*	-

Note: * Only when writing a '1' to clear.

Bit 15 to 1 — Notifies that the requested transmission of the corresponding Mailbox has been finished successfully. The bit 15 to 1 corresponds to Mailbox-15 to 1 respectively.

Bit[15:1]:TXACK0	Description
0	[Clearing Condition] Writing '1' (Initial value)
1	Corresponding Mailbox has successfully transmitted message (Data or Remote Frame) [Setting Condition] Completion of message transmission for corresponding mailbox

Bit 0 — This bit is always '0' as this is a receive-only mailbox. Writing a '1' to this bit position has no effect and always read back as a '0'.

chanhvinh.com

(4) Abort Acknowledge Register (ABACK1, ABACK0)

The ABACK1 and ABACK0 are 16-bit read/conditionally-write registers. These registers are used to signal to the CPU that a mailbox transmission has been aborted as per its request. When an abort has succeeded this module sets the corresponding bit in the ABACK register. The CPU may clear the Abort Acknowledge bit by writing a '1' to the corresponding bit location. Writing a '0' has no effect. An ABACK bit position is set by this module to acknowledge that a TXPR bit has been cleared by the corresponding TXCR bit.

- ABACK1

Bit:	15	14	13	12	11	10	9	8	7	6	5	4	3	2	1	0
	ABACK1[15:0]															
Initial value:	0	0	0	0	0	0	0	0	0	0	0	0	0	0	0	0
R/W:	R/W*	R/W*	R/W*	R/W*	R/W*	R/W*	R/W*	R/W*	R/W*	R/W*	R/W*	R/W*	R/W*	R/W*	R/W*	R/W*

Note: * Only when writing a '1' to clear.

Bit 15 to 0 — Notifies that the requested transmission cancellation of the corresponding Mailbox has been performed successfully. The bit 15 to 0 corresponds to Mailbox-31 to 16 respectively.

Bit[15:0]:ABACK1	Description
0	[Clearing Condition] Writing '1' (Initial value)
1	Corresponding Mailbox has cancelled transmission of message (Data or Remote Frame) [Setting Condition] Completion of transmission cancellation for corresponding mailbox

- ABACK0

Bit:	15	14	13	12	11	10	9	8	7	6	5	4	3	2	1	0
	ABACK0[15:1]															-
Initial value:	0	0	0	0	0	0	0	0	0	0	0	0	0	0	0	0
R/W:	R/W*	R/W*	R/W*	R/W*	R/W*	R/W*	R/W*	R/W*	R/W*	R/W*	R/W*	R/W*	R/W*	R/W*	R/W*	R

Note: * Only when writing a '1' to clear.

Bit 15 to 1 — Notifies that the requested transmission cancellation of the corresponding Mailbox has been performed successfully. The bit 15 to 1 corresponds to Mailbox-15 to 1 respectively.

chanhvinh.com

Bit[15:1]:ABACK0	Description
0	[Clearing Condition] Writing '1' (Initial value)
1	Corresponding Mailbox has cancelled transmission of message (Data or Remote Frame) [Setting Condition] Completion of transmission cancellation for corresponding mailbox

Bit 0 — This bit is always '0' as this is a receive-only mailbox. Writing a '1' to this bit position has no effect and always read back as a '0'.

(5) Data Frame Receive Pending Register (RXPR1, RXPR0)

The RXPR1 and RXPR0 are 16-bit read/conditionally-write registers. The RXPR is a register that contains the received Data Frames pending flags associated with the configured Receive Mailboxes. When a CAN Data Frame is successfully stored in a receive mailbox the corresponding bit is set in the RXPR. The bit may be cleared by writing a '1' to the corresponding bit position. Writing a '0' has no effect. However, the bit may only be set if the mailbox is configured by its MBC (Mailbox Configuration) to receive Data Frames. When a RXPR bit is set, it also sets IRR1 (Data Frame Received Interrupt Flag) if its MBIMR (Mailbox Interrupt Mask Register) is not set, and the interrupt signal is generated if IMR1 is not set. Please note that these bits are only set by receiving Data Frames and not by receiving Remote frames.

- RXPR1

Bit:	15	14	13	12	11	10	9	8	7	6	5	4	3	2	1	0
	RXPR1[15:0]															
Initial value:	0	0	0	0	0	0	0	0	0	0	0	0	0	0	0	0
R/W:	R/W*	R/W*	R/W*	R/W*	R/W*	R/W*	R/W*	R/W*	R/W*	R/W*	R/W*	R/W*	R/W*	R/W*	R/W*	R/W*

Note : * Only when writing a '1' to clear.

Bit 15 to 0 — Configurable receive mailbox locations corresponding to each mailbox position from 31 to 16 respectively.

Bit[15:0]: RXPR1	Description
0	[Clearing Condition] Writing '1' (Initial value)
1	Corresponding Mailbox received a CAN Data Frame [Setting Condition] Completion of Data Frame receive on corresponding mailbox

chanhvinh.com

- RXPR0

Bit:	15	14	13	12	11	10	9	8	7	6	5	4	3	2	1	0
	RXPR0[15:0]															
Initial value:	0	0	0	0	0	0	0	0	0	0	0	0	0	0	0	0
R/W:	R/W*	R/W*	R/W*	R/W*	R/W*	R/W*	R/W*	R/W*	R/W*	R/W*	R/W*	R/W*	R/W*	R/W*	R/W*	R/W*

Note: * Only when writing a '1' to clear.

Bit 15 to 0 — Configurable receive mailbox locations corresponding to each mailbox position from 15 to 0 respectively.

Bit[15:0]: RXPR0	Description
0	[Clearing Condition] Writing '1' (Initial value)
1	Corresponding Mailbox received a CAN Data Frame [Setting Condition] Completion of Data Frame receive on corresponding mailbox

(6) Remote Frame Receive Pending Register (RFPR1, RFPR0)

The RFPR1 and RFPR0 are 16-bit read/conditionally-write registers. The RFPR is a register that contains the received Remote Frame pending flags associated with the configured Receive Mailboxes. When a CAN Remote Frame is successfully stored in a receive mailbox the corresponding bit is set in the RFPR. The bit may be cleared by writing a '1' to the corresponding bit position. Writing a '0' has no effect. In effect there is a bit position for all mailboxes. However, the bit may only be set if the mailbox is configured by its MBC (Mailbox Configuration) to receive Remote Frames. When a RFPR bit is set, it also sets IRR2 (Remote Frame Receive Interrupt Flag) if its MBIMR (Mailbox Interrupt Mask Register) is not set, and the interrupt signal is generated if IMR2 is not set. Please note that these bits are only set by receiving Remote Frames and not by receiving Data frames.

- RFPR1

Bit:	15	14	13	12	11	10	9	8	7	6	5	4	3	2	1	0
	RFPR1[15:0]															
Initial value:	0	0	0	0	0	0	0	0	0	0	0	0	0	0	0	0
R/W:	R/W*	R/W*	R/W*	R/W*	R/W*	R/W*	R/W*	R/W*	R/W*	R/W*	R/W*	R/W*	R/W*	R/W*	R/W*	R/W*

Note: * Only when writing a '1' to clear.

chanhvinh.com

Bit 15 to 0 — Remote Request pending flags for mailboxes 31 to 16 respectively.

Bit[15:0]: RFPR1	Description
0	[Clearing Condition] Writing '1' (Initial value)
1	Corresponding Mailbox received Remote Frame [Setting Condition] Completion of remote frame receive in corresponding mailbox

- RFPR0

Bit:	15	14	13	12	11	10	9	8	7	6	5	4	3	2	1	0
	RFPR0[15:0]															
Initial value:	0	0	0	0	0	0	0	0	0	0	0	0	0	0	0	0
R/W:	R/W*	R/W*	R/W*	R/W*	R/W*	R/W*	R/W*	R/W*	R/W*	R/W*	R/W*	R/W*	R/W*	R/W*	R/W*	R/W*

Note: * Only when writing a '1' to clear.

Bit 15 to 0 — Remote Request pending flags for mailboxes 15 to 0 respectively.

Bit[15:0]: RFPR0	Description
0	[Clearing Condition] Writing '1' (Initial value)
1	Corresponding Mailbox received Remote Frame [Setting Condition] Completion of remote frame receive in corresponding mailbox

(7) Mailbox Interrupt Mask Register (MBIMR)

The MBIMR1 and MBIMR0 are 16-bit read/write registers. The MBIMR only prevents the setting of IRR related to the Mailbox activities, that are IRR[1] – Data Frame Received Interrupt, IRR[2] – Remote Frame Receive Interrupt, IRR[8] – Mailbox Empty Interrupt, and IRR[9] – Message OverRun/OverWrite Interrupt. If a mailbox is configured as receive, a mask at the corresponding bit position prevents the generation of a receive interrupt (IRR[1] and IRR[2] and IRR[9]) but does not prevent the setting of the corresponding bit in the RXPR or RFPR or UMSR. Similarly when a mailbox has been configured for transmission, a mask prevents the generation of an Interrupt signal and setting of an Mailbox Empty Interrupt due to successful transmission or abortion of transmission (IRR[8]), however, it does not prevent this module from clearing the corresponding TXPR/TXCR bit + setting the TXACK bit for successful transmission, and it does not prevent this module from clearing the corresponding TXPR/TXCR bit + setting the ABACK bit for abortion of the transmission.

chanhvinh.com

A mask is set by writing a '1' to the corresponding bit position for the mailbox activity to be masked. At reset all mailbox interrupts are masked.

- MBIMR1

Bit:	15	14	13	12	11	10	9	8	7	6	5	4	3	2	1	0
	MBIMR1[15:0]															
Initial value:	1	1	1	1	1	1	1	1	1	1	1	1	1	1	1	1
R/W:	R/W	R/W	R/W	R/W	R/W	R/W	R/W	R/W	R/W	R/W	R/W	R/W	R/W	R/W	R/W	R/W

Bit 15 to 0 — Enable or disable interrupt requests from individual Mailbox-31 to Mailbox-16 respectively.

Bit[15:0]: MBIMR1	Description
0	Interrupt Request from IRR1/IRR2/IRR8/IRR9 enabled
1	Interrupt Request from IRR1/IRR2/IRR8/IRR9 disabled (initial value)

- MBIMR0

Bit:	15	14	13	12	11	10	9	8	7	6	5	4	3	2	1	0
	MBIMR0[15:0]															
Initial value:	1	1	1	1	1	1	1	1	1	1	1	1	1	1	1	1
R/W:	R/W	R/W	R/W	R/W	R/W	R/W	R/W	R/W	R/W	R/W	R/W	R/W	R/W	R/W	R/W	R/W

Bit 15 to 0 — Enable or disable interrupt requests from individual Mailbox-15 to Mailbox-0 respectively.

Bit[15:0]: MBIMR0	Description
0	Interrupt Request from IRR1/IRR2/IRR8/IRR9 enabled
1	Interrupt Request from IRR1/IRR2/IRR8/IRR9 disabled (initial value)

chanhvinh.com

(8) Unread Message Status Register (UMSR)

This register is a 32-bit read/conditionally write register and it records the mailboxes whose contents have not been accessed by the CPU prior to a new message being received. If the CPU has not cleared the corresponding bit in the RXPR or RFPR when a new message for that mailbox is received, the corresponding UMSR bit is set to '1'. This bit may be cleared by writing a '1' to the corresponding bit location in the UMSR. Writing a '0' has no effect.

If a mailbox is configured as transmit box, the corresponding UMSR will not be set.

- UMSR1

Bit:	15	14	13	12	11	10	9	8	7	6	5	4	3	2	1	0
	UMSR1[15:0]															
Initial value:	0	0	0	0	0	0	0	0	0	0	0	0	0	0	0	0
R/W:	R/W*	R/W*	R/W*	R/W*	R/W*	R/W*	R/W*	R/W*	R/W*	R/W*	R/W*	R/W*	R/W*	R/W*	R/W*	R/W*

Note: * Only when writing a '1' to clear.

Bit 15 to 0 — Indicate that an unread received message has been overwritten or overrun condition has occurred for Mailboxes 31 to 16.

Bit[15:0]: UMSR1	Description
0	[Clearing Condition] Writing '1' (initial value)
1	Unread received message is overwritten by a new message or overrun condition [Setting Condition] When a new message is received before RXPR or RFPR is cleared

- UMSR0

Bit:	15	14	13	12	11	10	9	8	7	6	5	4	3	2	1	0
	UMSR0[15:0]															
Initial value:	0	0	0	0	0	0	0	0	0	0	0	0	0	0	0	0
R/W:	R/W*	R/W*	R/W*	R/W*	R/W*	R/W*	R/W*	R/W*	R/W*	R/W*	R/W*	R/W*	R/W*	R/W*	R/W*	R/W*

Note: * Only when writing a '1' to clear.

Bit 15 to 0 — Indicate that an unread received message has been overwritten or overrun condition has occurred for Mailboxes 15 to 0.

chanhvinh.com

Bit[15:0]: UMSR0	Description
0	[Clearing Condition] Writing '1' (initial value)
1	Unread received message is overwritten by a new message or overrun condition [Setting Condition] When a new message is received before RXPR or RFPR is cleared

23.3.5 Timer Registers

The Timer is 16 bits and supports several source clocks. A pre-scale counter can be used to reduce the speed of the clock. It also supports three Compare Match Registers (TCMR2, TCMR1, TCMR0). The address map is as follows.

Important: These registers can only be accessed in Word size (16-bit).

Description	Address	Name	Access Size (bits)
Timer Trigger Control Register 0	080	TTCR0	Word (16)
Cycle Maximum/Tx-Enable Window Register	084	CMAX_TEW	Word (16)
Reference Trigger Offset Register	086	RFTROFF	Word (16)
Timer Status Register	088	TSR	Word (16)
Cycle Counter Register	08A	CCR	Word (16)
Timer Counter Register	08C	TCNTR	Word (16)
Cycle Time Register	090	CYCTR	Word (16)
Reference Mark Register	094	RFMK	Word (16)
Timer Compare Match Register 0	098	TCMR0	Word (16)
Timer Compare Match Register 1	09C	TCMR1	Word (16)
Timer Compare Match Register 2	0A0	TCMR2	Word (16)
Tx-Trigger Time Selection Register	0A4	TTTSEL	Word (16)

Figure 23.12 Timer Registers

chanhvinh.com

(1) Time Trigger Control Register0 (TTCR0)

The Time Trigger Control Register0 is a 16-bit read/write register and provides functions to control the operation of the Timer. When operating in Time Trigger Mode, please refer to section 23.4.3 (1), Time Triggered Transmission.

- TTCR0 (Address = H'080)

Bit:	15	14	13	12	11	10	9	8	7	6	5	4	3	2	1	0
	TCR15	TCR14	TCR13	TCR12	TCR11	TCR10	-	-	-	TCR6	TPSC5	TPSC4	TPSC3	TPSC2	TPSC1	TPSC0
Initial value:	0	0	0	0	0	0	0	0	0	0	0	0	0	0	0	0
R/W:	R/W	R/W	R/W	R/W	R/W	R/W	R	R	R	R/W	R/W	R/W	R/W	R/W	R/W	R/W

Bit 15 — Enable Timer: When this bit is set, the timer TCNTR is running. When this bit is cleared, TCNTR and CCR are cleared.

Bit15: TTCR0 15	Description
0	Timer and CCR are cleared and disabled (initial value)
1	Timer is running

Bit 14 — TimeStamp value: Specifies if the Timestamp for transmission and reception in Mailboxes 15 to 0 must contain the Cycle Time (CYCTR) or the concatenation of CCR[5:0] + CYCTR[15:6]. This feature is very useful for time triggered transmission to monitor Rx_Trigger.

This register does not affect the TimeStamp for Mailboxes 30 and 31.

Bit14: TTCR0 14	Description
0	CYCTR[15:0] is used for the TimeStamp in Mailboxes 15 to 0 (initial value)
1	CCR[5:0] + CYCTR[15:6] is used for the TimeStamp in Mailboxes 15 to 0

Bit 13 — Cancellation by TCMR2: The messages in the transmission queue are cancelled by setting TXCR, when both this bit and bit12 are set and compare match occurs when this module is not in the Halt status, causing the setting of all TXCR bits with the corresponding TXPR bits set.

Bit13: TTCR0 13	Description
0	Cancellation by TCMR2 compare match is disabled (initial value)
1	Cancellation by TCMR2 compare match is enabled

chanhvinh.com

Bit 12 — TCMR2 compare match enable: When this bit is set, IRR11 is set by TCMR2 compare match.

Bit12 TTCR0 12	Description
0	IRR11 isn't set by TCMR2 compare match (initial value)
1	IRR11 is set by TCMR2 compare match

Bit 11 — TCMR1 compare match enable: When this bit is set, IRR15 is set by TCMR1 compare match.

Bit11 TTCR0 11	Description
0	IRR15 isn't set by TCMR1 compare match (initial value)
1	IRR15 is set by TCMR1 compare match

Bit 10 — TCMR0 compare match enable: When this bit is set, IRR14 is set by TCMR0 compare match.

Bit10 TTCR0 10	Description
0	IRR14 isn't set by TCMR0 compare match (initial value)
1	IRR14 is set by TCMR0 compare match

Bits 9 to 7: Reserved. The written value should always be '0' and the returned value is '0'.

Bit 6 — Timer Clear-Set Control by TCMR0: Specifies if the Timer is to be cleared and set to H'0000 when the TCMR0 matches to the TCNTR. Please note that the TCMR0 is also capable to generate an interrupt signal to the CPU via IRR14.

Note: If this module is working in TTCAN mode (CMAX isn't 3'b111), TTCR0 bit6 has to be '0' to avoid clearing Local Time.

Bit6: TTCR0 6	Description
0	Timer is not cleared by the TCMR0 (initial value)
1	Timer is cleared by the TCMR0

chanhvinh.com

Bit5 to 0 — Timer Prescaler (TPSC[5:0]): This control field allows the timer source clock (4*[this module system clock]) to be divided before it is used for the timer. This function is available only in event-trigger mode. In time trigger mode (CMAX is not 3'b111), one nominal Bit Timing (= one bit length of CAN bus) is automatically chosen as source clock of TCNTR.

The following relationship exists between source clock period and the timer period.

Bit[5:0]: TPSC[5:0]	Description
0 0 0 0 0 0	1 X Source Clock (initial value)
0 0 0 0 0 1	2 X Source Clock
0 0 0 0 1 0	3 X Source Clock
0 0 0 0 1 1	4 X Source Clock
0 0 0 1 0 0	5 X Source Clock
. . . . .	. . . . .
. . . . .	. . . . .
1 1 1 1 1 1	64 X Source Clock

(2) Cycle Maximum/Tx-Enable Window Register (CMAX_TEW)

This register is a 16-bit read/write register. CMAX specifies the maximum value for the cycle counter (CCR) for TT Transmissions to set the number of basic cycles in the matrix system. When the Cycle Counter reaches the maximum value (CCR = CMAX), after a full basic cycle, it is cleared to zero and an interrupt is generated on IRR.10.

TEW specifies the width of Tx-Enable window.

- CMAX_TEW (Address = H'084)

Bit:	15	14	13	12	11	10	9	8	7	6	5	4	3	2	1	0
	-	-	-	-	-	CMAX[2:0]			-	-	-	-	TEW[3:0]			
Initial value:	0	0	0	0	0	1	1	1	0	0	0	0	0	0	0	0
R/W:	R	R	R	R	R	R/W	R/W	R/W	R	R	R	R	R/W	R/W	R/W	R/W

Bits 15 to 11: Reserved. The written value should always be '0' and the returned value is '0'.

chanhvinh.com

Bit 10 to 8 — Cycle Count Maximum (CMAX): Indicates the maximum number of CCR. The number of basic cycles available in the matrix cycle for Timer Triggered transmission is (Cycle Count Maximum + 1).

Unless CMAX = 3'b111, this module is in time-trigger mode and time trigger function is available. If CMAX = 3'b111, this module is in event-trigger mode.

Bit[10:8]: CMAX[2:0]	Description
0 0 0	Cycle Count Maximum = 0
0 0 1	Cycle Count Maximum = 1
0 1 0	Cycle Count Maximum = 3
0 1 1	Cycle Count Maximum = 7
1 0 0	Cycle Count Maximum = 15
1 0 1	Cycle Count Maximum = 31
1 1 0	Cycle Count Maximum = 63
1 1 1	CCR is cleared and this module is in event-trigger mode. (initial value)

Important: Please set CMAX = 3'b111 when event-trigger mode is used.

Bits 7 to 4: Reserved. The written value should always be '0' and the returned value is ‘0’.

Bit 3 to 0 — Tx-Enable Window (TEW): Indicates the width of Tx-Enable Window. TEW = H'00 shows the width is one nominal Bit Timing. All values from 0 to 15 are allowed to be set.

Bit[3:0]: TEW[3:0]	Description
0 0 0 0	The width of Tx-Enable Window = 1 (initial value)
0 0 0 1	The width of Tx-Enable Window = 2
0 0 1 0	The width of Tx-Enable Window = 3
0 0 1 1	The width of Tx-Enable Window = 4
. . . .	. . . . .
. . . .	. . . . .
1 1 1 1	The width of Tx-Enable Window = 16

Note: The CAN core always needs a time between 1 to 2 bit timing to initiate transmission. The above values are not considering this accuracy.

chanhvinh.com

(3) Reference Trigger Offset Register (RFTROFF)

This is a 8-bit read/write register that affects Tx-Trigger Time (TTT) of Mailbox-30. The TTT of Mailbox-30 is compared with CYCTR after RFTROFF extended with sign is added to the TTT. However, the value of TTT is not modified. The offset value doesn't affect others except Mailbox-30.

- RFTROFF (Address = H'086)

Bit:	15	14	13	12	11	10	9	8	7	6	5	4	3	2	1	0
	RFTROFF[7:0]								-	-	-	-	-	-	-	-
Initial value:	0	0	0	0	0	0	0	0	0	0	0	0	0	0	0	0
R/W:	R/W	R/W	R/W	R/W	R/W	R/W	R/W	R/W	R	R	R	R	R	R	R	R

Bit 15 to 8 — Indicate the value of Reference Trigger Offset.

Bits 7 to 0: Reserved. The written value should always be '0' and the returned value is '0'.

Bit15	Bit14	Bit13	Bit12	Bit11	Bit10	Bit9	Bit8	Description
0	0	0	0	0	0	0	0	Ref_trigger_offset = +0 (initial value)
0	0	0	0	0	0	0	1	Ref_trigger_offset = +1
0	0	0	0	0	0	1	0	Ref_trigger_offset = +2
.	.	.	.	.	.	.	.	
0	1	1	1	1	1	1	1	Ref_trigger_offset = +127
.	.	.	.	.	.	.	.	
1	1	1	1	1	1	1	1	Ref_trigger_offset = –1
1	1	1	1	1	1	1	0	Ref_trigger_offset = –2
.	.	.	.	.	.	.	.	
1	0	0	0	0	0	0	1	Ref_trigger_offset = –127
1	0	0	0	0	0	0	0	Prohibited

chanhvinh.com

(4) Timer Status Register (TSR)

This register is a 16-bit read-only register, and allows the CPU to monitor the Timer Compare Match status and the Timer Overrun Status.

- TSR (Address = H'088)

Bit:	15	14	13	12	11	10	9	8	7	6	5	4	3	2	1	0
	-	-	-	-	-	-	-	-	-	-	-	TSR4	TSR3	TSR2	TSR1	TSR0
Initial value:	0	0	0	0	0	0	0	0	0	0	0	0	0	0	0	0
R/W:	R	R	R	R	R	R	R	R	R	R	R	R	R	R	R	R

Bits 15 to 5: Reserved. The written value should always be '0' and the returned value is '0'.

Bit 4 to 0 — Timer Status (TSR[4:0]): This read-only field allows the CPU to monitor the status of the Cycle Counter, the Timer and the Compare Match registers. Writing to this field has no effect.

Bit 4 — Start of New System Matrix (TSR4): Indicates that a new system matrix is starting. When CCR = 0, this bit is set at the successful completion of reception/transmission of time reference message.

Bit4: TSR4	Description
0	A new system matrix is not starting (initial value) [Clearing condition] Writing '1' to IRR10 (Cycle Counter Overflow Interrupt)
1	Cycle counter reached zero [Setting condition] When the Cycle Counter value changes from the maximum value (CMAX) to H'0. Reception/transmission of time reference message is successfully completed when CMAX!= 3'b111 and CCR = 0

chanhvinh.com

Bit 3 — Timer Compare Match Flag 2 (TSR3): Indicates that a Compare-Match condition occurred to the Timer Compare Match Register 2 (TCMR2). When the value set in the TCMR2 matches to Cycle Time Register (TCMR2 = CYCTR), this bit is set if TTCR0 bit12 = 1. Please note that this bit is read-only and is cleared when IRR11 (Timer Compare Match Interrupt 2) is cleared.

Bit3: TSR3	Description
0	Timer Compare Match has not occurred to the TCMR2 (Initial value) [Clearing condition] Writing '1' to IRR11 (Timer Compare Match Interrupt 1)
1	Timer Compare Match has occurred to the TCMR2 [Setting condition] TCMR2 matches to Cycle Time (TCMR2 = CYCTR), if TTCR0 bit12 = 1.

Bit 2 — Timer Compare Match Flag 1 (TSR2): Indicates that a Compare-Match condition occurred to the Timer Compare Match Register 1 (TCMR1). When the value set in the TCMR1 matches to Cycle Time Register (TCMR1 = CYCTR), this bit is set if TTCR0 bit11 = 1. Please note that this bit is read-only and is cleared when IRR15 (Timer Compare Match Interrupt 1) is cleared.

Bit2: TSR2	Description
0	Timer Compare Match has not occurred to the TCMR1 (Initial value) [Clearing condition] Writing '1' to IRR15 (Timer Compare Match Interrupt 1)
1	Timer Compare Match has occurred to the TCMR1 [Setting condition] TCMR1 matches to Cycle Time (TCMR1 = CYCTR), if TTCR0 bit11 = 1.

Bit 1 — Timer Compare Match Flag 0 (TSR1): Indicates that a Compare-Match condition occurred to the Compare Match Register 0 (TCMR0). When the value set in the TCMR0 matches to the Timer value (TCMR0 = TCNTR), this bit is set if TTCR0 bit10 = 1. Please note that this bit is read-only and is cleared when IRR14 (Timer Compare Match Interrupt 0) is cleared.

Bit1: TSR1	Description
0	Compare Match has not occurred to the TCMR0 (Initial value) [Clearing condition] Writing '1' to IRR14 (Timer Compare Match Interrupt 0)
1	Compare Match has occurred to the TCMR0 [Setting condition] TCMR0 matches to the Timer value (TCMR0 = TCNTR)

chanhvinh.com

Bit 0 — Timer Overrun/Next_is_Gap Reception/Message Error (TSR0): This flag is assigned to three different functions. It indicates that the Timer has overrun when working in event-trigger mode, time reference message with Next_is_Gap set has been received in time-trigger mode, and error detected on the CAN bus has occurred in test mode, respectively. Test mode has higher priority with respect to the other settings.

Bit0: TSR0	Description
0	Timer (TCNTR) has not overrun in event-trigger mode (Initial value) Time reference message with Next_is_Gap has not been received in time-trigger mode message error has not occurred in test mode. [Clearing condition] Writing '1' to IRR13
1	[Setting condition] Timer (TCNTR) has overrun and changed from H'FFFF to H'0000 in event-trigger mode.time reference message with Next_is_Gap has been received in time-trigger mode message error has occurred in test mode

(5) Cycle Counter Register (CCR)

This register is a 6-bit read/write register. Its purpose is to store the number of the basic cycle for Time -Triggered Transmissions. Its value is updated in different fashions depending if this module is programmed to work as a potential time master or as a time slave. If this module is working as (potential) time master, CCR is:

— Incremented by one every time the cycle time (CYCTR) matches to Tx-Trigger Time of Mailbox-30 or

— Overwritten with the value contained in MSG_DATA_0[5:0] of Mailbox 31 when a valid reference message is received.

If this module is working as a time slave, CCR is only overwritten with the value of MSG_DATA_0[5:0] of Mailbox 31 when a valid reference message is received.

If CMAX = 3'111, CCR is always H'0000.

- CCR (Address = H'08A)

Bit:	15	14	13	12	11	10	9	8	7	6	5	4	3	2	1	0
	-	-	-	-	-	-	-	-	-	-	CCR[5:0]					
Initial value:	0	0	0	0	0	0	0	0	0	0	0	0	0	0	0	0
R/W:	R	R	R	R	R	R	R	R	R	R	R/W	R/W	R/W	R/W	R/W	R/W

chanhvinh.com

Bits 15 to 6: Reserved. The written value should always be '0' and the returned value is '0'.

Bit 5 to 0 — Cycle Counter Register (CCR): Indicates the number of the current Base Cycle of the matrix cycle for Timer Triggered transmission.

(6) Timer Counter Register (TCNTR)

This is a 16-bit read/write register that allows the CPU to monitor and modify the value of the Free Running Timer Counter. When the Timer meets TCMR0 (Timer Compare Match Register 0) + TTCR0 [6] is set to '1', the TCNTR is cleared to H'0000 and starts running again. In Time-Trigger mode, this timer can be used as Local Time and TTCR0[6] has to be cleared to work as a free running timer.

Notes: 1. It is possible to write into this register only when it is enabled by the bit 15 in TTCR0. If TTCR0 bit15 = 0, TCNTR is always H'0000.
2. There could be a delay of a few clock cycles between the enabling of the timer and the moment where TCNTR starts incrementing. This is caused by the internal logic used for the pre-scaler.

- TCNTR (Address = H'08C)

Bit:	15	14	13	12	11	10	9	8	7	6	5	4	3	2	1	0
	TCNTR[15:0]															
Initial value:	0	0	0	0	0	0	0	0	0	0	0	0	0	0	0	0
R/W:	R/W*	R/W*	R/W*	R/W*	R/W*	R/W*	R/W*	R/W*	R/W*	R/W*	R/W*	R/W*	R/W*	R/W*	R/W*	R/W*

Note: * The register can be written only when enabled in TTCR0[15]. Write operation is not allowed in Time Trigger mode (i.e. CMAX is not 3'b111).

Bit 15 to 0 — Indicate the value of the Free Running Timer.

(7) Cycle Time register (CYCTR)

This register is a 16-bit read-only register. This register shows Cycle Time = Local Time (TCNTR) - Reference_Mark (RFMK). In ET mode this register is the exact copy of TCNTR as RFMK is always fixed to zero.

- CYCTR (Address = H'090)

Bit:	15	14	13	12	11	10	9	8	7	6	5	4	3	2	1	0
	CYCTR[15:0]															
Initial value:	0	0	0	0	0	0	0	0	0	0	0	0	0	0	0	0
R/W:	R	R	R	R	R	R	R	R	R	R	R	R	R	R	R	R

chanhvinh.com

(8) Reference Mark Register (RFMK)

This register is a 16-bit read-only register. The purpose of this register is to capture Local Time (TCNTR) at SOF of the reference message when the message is received or transmitted successfully. In ET mode this register is not used and it is always cleared to zero.

- RFMK (Address = H'094)

Bit:	15	14	13	12	11	10	9	8	7	6	5	4	3	2	1	0
	RFMK[15:0]															
Initial value:	0	0	0	0	0	0	0	0	0	0	0	0	0	0	0	0
R/W:	R	R	R	R	R	R	R	R	R	R	R	R	R	R	R	R

Bit 15 to 0 — Reference Mark Register (RFMK): Indicates the value of TCNTR at SOF of time reference message.

(9) Timer Compare Match Registers (TCMR0, TCMR1, TCMR2)

These three registers are 16-bit read/write registers and are capable of generating interrupt signals, clearing-setting the Timer value (only supported by TCMR0) or clear the transmission messages in the queue (only supported by TCMR2). TCMR0 is compared with TCNTR, however, TCMR1 and TCMR2 are compared with CYCTR.

The value used for the compare can be configured independently for each register. In order to set flags, TTCR0 bit 12-10 needs to be set.

In Time-Trigger mode, TTCR0 bit6 has to be cleared by software to prevent TCNTR from being cleared.

TMCR0 is for Init_Watch_Trigger, and TCMR2 is for Watch_Trigger.

Interrupt:

The interrupts are flagged by the Bit11, Bit15 and 14 in the IRR accordingly when a Compare Match occurs, and setting these bits can be enabled by Bit12, Bit11, Bit10 in TTCR0. The generation of interrupt signals itself can be prevented by the Bit11, Bit15 and Bit14 in the IMR. When a Compare Match occurs and the IRR11 (or IRR15 or IRR14) is set, the Bit3 or Bit2 or Bit1 in the TSR (Timer Status Register) is also set. Clearing the IRR bit also clears the corresponding bit of TSR.

chanhvinh.com

Timer Clear-Set:

The Timer value can only be cleared when a Compare Match occurs if it is enabled by the Bit6 in the TTCR0. TCMR1 and TCMR2 do not have this function.

Cancellation of the messages in the transmission queue:

The messages in the transmission queue can only be cleared by the TCMR2 through setting TXCR when a Compare Match occurs while this module is not in the halt status. TCMR1 and TCMR0 do not have this function.

- TCMR0 (Address = H'098)

Bit:	15	14	13	12	11	10	9	8	7	6	5	4	3	2	1	0
	TCMR0[15:0]															
Initial value:	1	1	1	1	1	1	1	1	1	1	1	1	1	1	1	1
R/W:	R/W	R/W	R/W	R/W	R/W	R/W	R/W	R/W	R/W	R/W	R/W	R/W	R/W	R/W	R/W	R/W

Bit 15 to 0 — Timer Compare Match Register (TCMR0): Indicates the value of TCNTR when compare match occurs.

- TCMR1 (Address = H'09C)

Bit:	15	14	13	12	11	10	9	8	7	6	5	4	3	2	1	0
	TCMR1[15:0]															
Initial value:	1	1	1	1	1	1	1	1	1	1	1	1	1	1	1	1
R/W:	R/W	R/W	R/W	R/W	R/W	R/W	R/W	R/W	R/W	R/W	R/W	R/W	R/W	R/W	R/W	R/W

Bit 15 to 0 — Timer Compare Match Register (TCMR1): Indicates the value of CYCTR when compare match occurs.

- TCMR2 (Address = H'0A0)

Bit:	15	14	13	12	11	10	9	8	7	6	5	4	3	2	1	0
	TCMR2[15:0]															
Initial value:	1	1	1	1	1	1	1	1	1	1	1	1	1	1	1	1
R/W:	R/W	R/W	R/W	R/W	R/W	R/W	R/W	R/W	R/W	R/W	R/W	R/W	R/W	R/W	R/W	R/W

Bit 15 to 0 — Timer Compare Match Register (TCMR2): Indicates the value of CYCTR when compare match occurs.

chanhvinh.com

(10) Tx-Trigger Time Selection Register (TTTSEL)

This register is a 16-bit read/write register and specifies the Tx-Trigger Time waiting for compare match with Cycle Time. Only one bit is allowed to be set. Please don't set more bits than one, or clear all bits.

This register may only be modified during configuration mode. The modification algorithm is shown in figure 23.13.

Please note that this register is only indented for test and diagnosis. When not in test mode, this register must not be written to and the returned value is not guaranteed.

- TTTSEL (Address = H'0A4)

Bit:	15	14	13	12	11	10	9	8	7	6	5	4	3	2	1	0
	-	TTTSEL[14:8]							-	-	-	-	-	-	-	-
Initial value:	0	1	0	0	0	0	0	0	0	0	0	0	0	0	0	0
R/W:	R	R/W	R/W	R/W	R/W	R/W	R/W	R/W	R	R	R	R	R	R	R	R

Note: Only one bit is allowed to be set.

Bit 15: Reserved. The written value should always be '0' and the returned value is '0'.

Bit 14 to 8 — Specifies the Tx-Trigger Time waiting for compare match with CYCTR The bit 14 to 8 corresponds to Mailbox-30 to 24, respectively.

Bits 7 to 0: Reserved. The written value should always be '0' and the returned value is '0'.

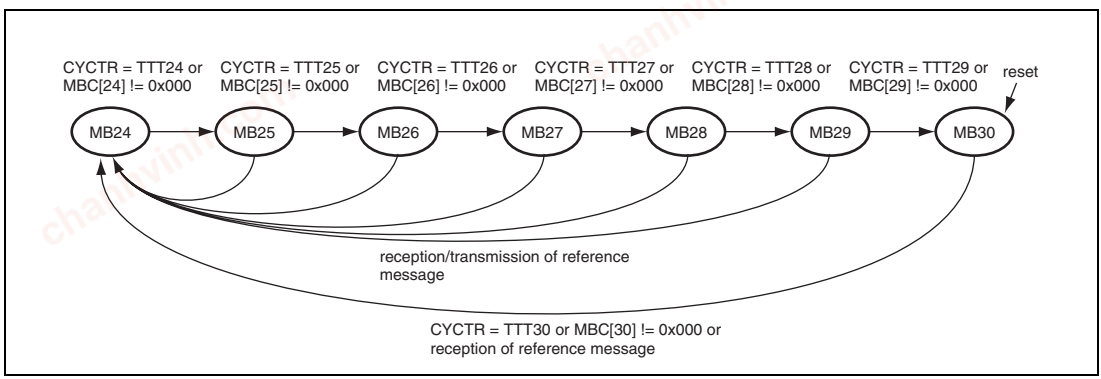

Figure 23.13 TTTSEL modification algorithm

chanhvinh.com

23.4 Application Note

23.4.1 Test Mode Settings

This module has various test modes. The register TST[2:0] (MCR[10:8]) is used to select this module test mode. The default (initialised) settings allow this module to operate in Normal mode. The following table is examples for test modes.

Test Mode can be selected only while in configuration mode. The user must then exit the configuration mode (ensuring BCR0/BCR1 is set) in order to run the selected test mode.

Bit10: TST2	Bit9: TST1	Bit8: TST0	Description
0	0	0	Normal Mode (initial value)
0	0	1	Listen-Only Mode (Receive-Only Mode)
0	1	0	Self Test Mode 1 (External)
0	1	1	Self Test Mode 2 (Internal)
1	0	0	Write Error Counter
1	0	1	Error Passive Mode
1	1	0	Setting prohibited
1	1	1	Setting prohibited

Normal Mode: This module operates in the normal mode.

Listen-Only Mode: ISO-11898 requires this mode for baud rate detection. The Error Counters are cleared and disabled so that the TEC/REC does not increase the values, and the CTxn (n = 0 to 2) Output is disabled so that this module does not generate error frames or acknowledgment bits. IRR13 is set when a message error occurs.

Self Test Mode 1: This module generates its own Acknowledge bit, and can store its own messages into a reception mailbox (if required). The CRxn/CTxn (n = 0 to 2) pins must be connected to the CAN bus.

chanhvinh.com

Self Test Mode 2: This module generates its own Acknowledge bit, and can store its own messages into a reception mailbox (if required). The CRxn/CTxn (n = 0 to 2) pins do not need to be connected to the CAN bus or any external devices, as the internal CTxn (n = 0 to 2) is looped back to the internal CRxn (n = 0 to 2). CTxn (n = 0 to 2) pin outputs only recessive bits and CRxn (n = 0 to 2) pin is disabled.

Write Error Counter: TEC/REC can be written in this mode. This module can be forced to become an Error Passive mode by writing a value greater than 127 into the Error Counters. The value written into TEC is used to write into REC, so only the same value can be set to these registers. Similarly, this module can be forced to become an Error Warning by writing a value greater than 95 into them.

This module needs to be in Halt Mode when writing into TEC/REC (MCR1 must be "1" when writing to the Error Counter). Furthermore this test mode needs to be exited prior to leaving Halt mode.

Error Passive Mode: This module can be forced to enter Error Passive mode.
Note: The REC will not be modified by implementing this Mode. However, once running in Error Passive Mode, the REC will increase normally should errors be received. In this Mode, this module will enter BusOff if TEC reaches 256 (Dec). However when this mode is used this module will not be able to become Error Active. Consequently, at the end of the Bus Off recovery sequence, this module will move to Error Passive and not to Error Active.

When message error occurs, IRR13 is set in all test modes.

chanhvinh.com

23.4.2 Configuration of This Module

This module is considered in configuration mode or after a H/W (Power On Reset)/S/W (MCR[0]) reset or when in Halt mode. In both conditions this module cannot join the CAN Bus activity and configuration changes have no impact on the traffic on the CAN Bus.

- After a Reset request

The following sequence must be implemented to configure this module after (S/W or H/W) reset. After reset, all the registers are initialised, therefore, this module needs to be configured before joining the CAN bus activity. Please read the notes carefully.

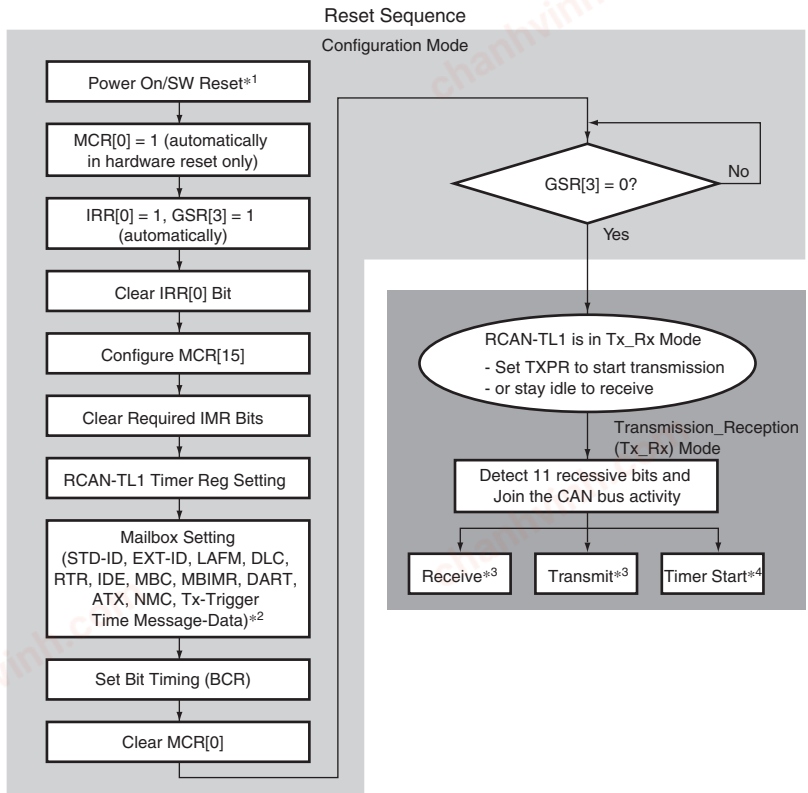

Notes: 1. SW reset could be performed at any time by setting MCR[0] = 1.
2. Mailboxes are comprised of RAMs, therefore, please initialise all the mailboxes enabled by MBC.
3. If there is no TXPR set, RCAN-TL1 will receive the next incoming message. If there is a TXPR(s) set, RCAN-TL1 will start transmission of the message and will be arbitrated by the CAN bus. If it loses the arbitration, it will become a receiver.
4. Timer can be started at any time after the Timer Control regs and Tx-Trigger Time are set.

Figure 23.14 Reset Sequence

chanhvinh.com

- Halt mode

When this module is in Halt mode, it cannot take part to the CAN bus activity. Consequently the user can modify all the requested registers without influencing existing traffic on the CAN Bus. It is important for this that the user waits for this module to be in halt mode before to modify the requested registers - note that the transition to Halt Mode is not always immediate (transition will occurs when the CAN Bus is idle or in intermission). After this module transit to Halt Mode, GSR4 is set.

Once the configuration is completed the Halt request needs to be released. This module will join CAN Bus activity after the detection of 11 recessive bits on the CAN Bus.

- Sleep mode

When this module is in sleep mode the clock for the main blocks of the IP is stopped in order to reduce power consumption. Only the following user registers are clocked and can be accessed: MCR, GSR, IRR and IMR. Interrupt related to transmission (TXACK and ABACK) and reception (RXPR and RFPR) cannot be cleared when in sleep mode (as TXACK, ABACK, RXPR and RFPR are not accessible) and must to be cleared beforehand.

chanhvinh.com

The following diagram shows the flow to follow to move this module into sleep mode.

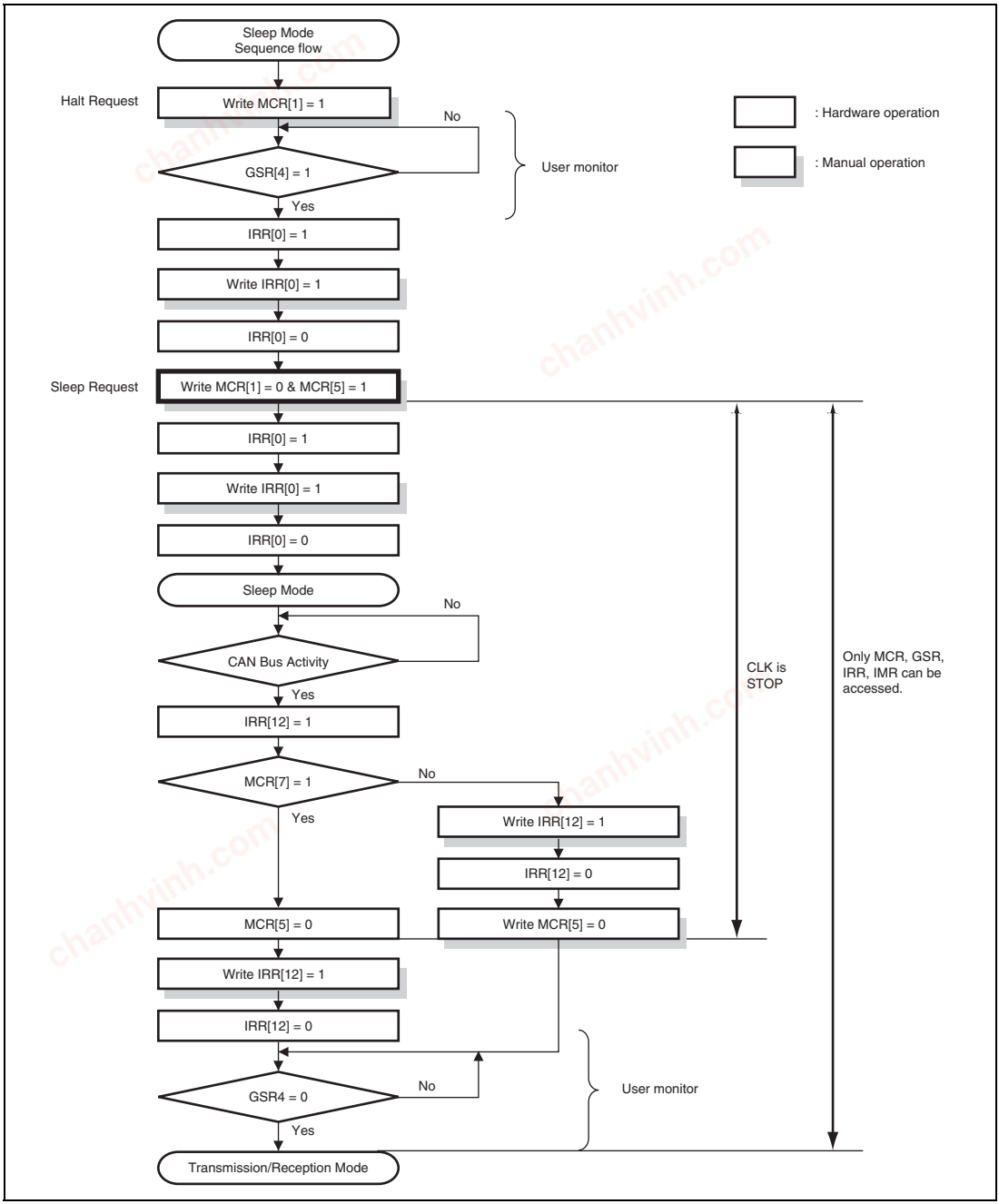

chanhvinh.com

Figure 23.15 shows allowed state transitions.

— Please don't set MCR5 (Sleep Mode) without entering Halt Mode.

— After MCR1 is set, please don't clear it before GSR4 is set and this module enters Halt Mode.

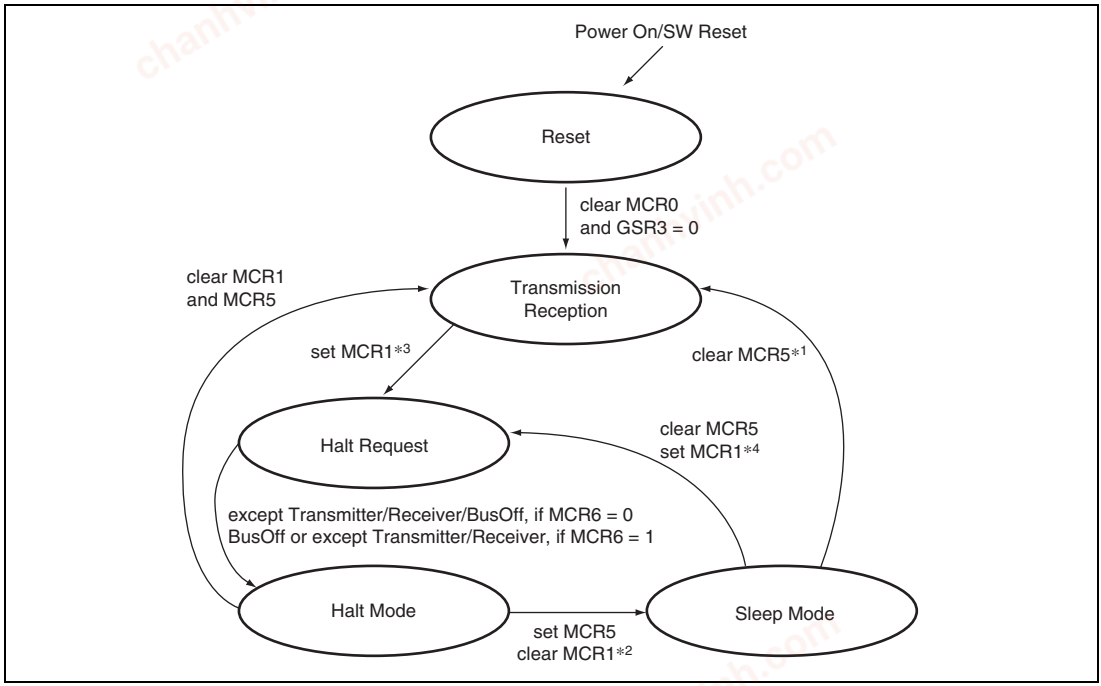

Figure 23.15 Halt Mode/Sleep Mode

Notes: 1. MCR5 can be cleared by automatically by detecting a dominant bit on the CAN Bus if MCR7 is set or by writing '0'.

2. MCR1 is cleared in SW. Clearing MCR1 and setting MCR5 have to be carried out by the same instruction.

3. MCR1 must not be cleared in SW, before GSR4 is set. MCR1 can be set automatically in HW when this module moves to Bus Off and MCR14 and MCR6 are both set.

4. When MCR5 is cleared and MCR1 is set at the same time, this module moves to Halt Request. Right after that, it moves to Halt Mode with no reception/transmission.

The following table shows conditions to access registers.

chanhvinh.com

	Registers										
Status Mode	MCR GSR	IRR IMR	BCR	MBIMR timer TT_register	Flag_ register	Mailbox (ctrl0, LAFM)		Mailbox (data)	Mailbox (ctrl1)		Mailbox Trigger Time TT control
Reset	yes	yes	yes	yes	yes	yes		yes	yes		yes
Transmission Reception Halt Request	yes	yes	no*1	yes	yes	no*1	yes*2	yes*2	no*1	yes*2	yes*2
Halt	yes	yes	no*1	yes	yes	yes		yes	yes		yes
Sleep	yes	yes	no	no	no	no		no	no		no

Notes: 1. No hardware protection.
2. When TXPR is not set.

23.4.3 Message Transmission Sequence

- Message Transmission Request

The following sequence is an example to transmit a CAN frame onto the bus. As described in the previous register section, please note that IRR8 is set when one of the TXACK or ABACK bits is set, meaning one of the Mailboxes has completed its transmission or transmission abortion and is now ready to be updated for the next transmission, whereas, the GSR2 means that there is currently no transmission request made (No TXPR flags set).

chanhvinh.com

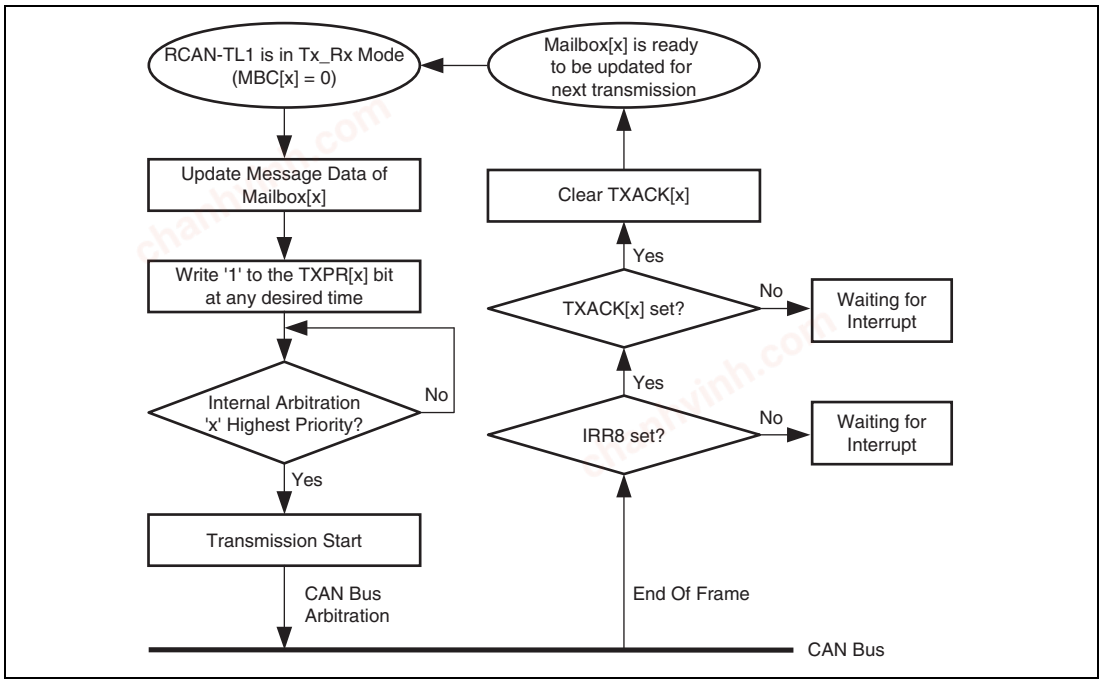

Figure 23.16 Transmission request

- Internal Arbitration for transmission

The following diagram explains how this module manages to schedule transmission-requested messages in the correct order based on the CAN identifier. 'Internal arbitration' picks up the highest priority message amongst transmit-requested messages.

chanhvinh.com

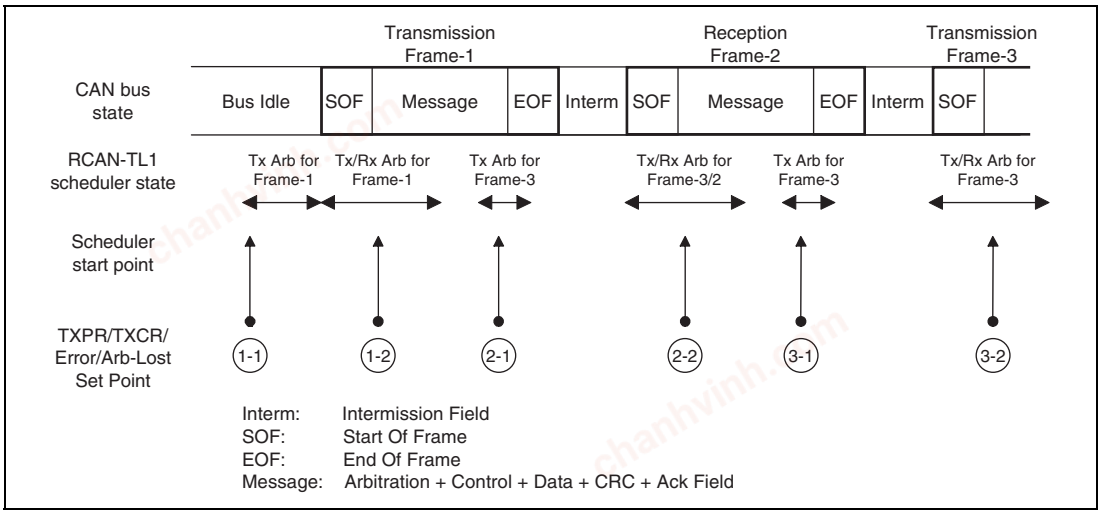

Figure 23.17 Internal Arbitration for transmission

This module has two state machines. One is for transmission, and the other is for reception.

1-1: When a TXPR bit(s) is set while the CAN bus is idle, the internal arbitration starts running immediately and the transmission is started.

1-2: Operations for both transmission and reception starts at SOF. Since there is no reception frame, this module becomes transmitter.

2-1: At crc delimiter, internal arbitration to search next message transmitted starts.

2-2: Operations for both transmission and reception starts at SOF. Because of a reception frame with higher priority, this module becomes receiver. Therefore, Reception is carried out instead of transmitting Frame-3.

3-1: At crc delimiter, internal arbitration to search next message transmitted starts.

3-2: Operations for both transmission and reception starts at SOF. Since a transmission frame has higher priority than reception one, this module becomes transmitter.

Internal arbitration for the next transmission is also performed at the beginning of each error delimiter in case of an error is detected on the CAN Bus. It is also performed at the beginning of error delimiters following overload frame.

As the arbitration for transmission is performed at CRC delimiter, in case a remote frame request is received into a Mailbox with ATX = 1 the answer can join the arbitration for transmission only at the following Bus Idle, CRC delimiter or Error Delimiter.

Depending on the status of the CAN bus, following the assertion of the TXCR, the corresponding Message abortion can be handled with a delay of maximum 1 CAN Frame.

chanhvinh.com

(1) Time Triggered Transmission

This module offers a H/W support to perform communication in Time Trigger mode in line with the emerging ISO-11898-4 Level 1 Specification.

This section reports the basic procedures to use this mode.

- Setting Time Trigger Mode

In order to set up the time trigger mode the following settings need to be used.

— CMAX in CMAX_TEW must be programmed to a value different from 3'b111.
— Bit 15 in TTCR0 has to be set, to start TCNTR.
— Bit 6 in TTCR0 has to be cleared to prevent TCNTR from being cleared after a match.
— DART in Mailboxes used for time-triggered transmission cannot be used, since for Time Triggered Mailboxes, TXPR is not cleared to support periodic transmission.

- Roles of Registers

The user registers of this module can be used to handle the main functions requested by the TTCAN standard.

TCNTR	Local Time
RFMK	Ref_Mark
CYCTR	Cycle Time = TCNTR - RFMK
RFTROFF	Ref_Trigger_Offset for Mailbox-30
Mailbox-31	Mailbox dedicated to the reception of time reference message
Mailbox-30	Mailbox dedicated to the transmission of time reference message when working as a potential time master
Mailbox-29 to 24	Mailboxes supporting time-triggered transmission
Mailbox-23 to 16	Mailboxes supporting reception without timestamp (may also be implemented as Mailboxes supporting Event Triggered transmission)
Mailbox-15 to 0	Mailboxes supporting reception with timestamp timestamp (may also be implemented as Mailboxes supporting Event Triggered transmission)
Tx-Trigger Time	Time_Mark to specify when a message should be transmitted

chanhvinh.com

CMAX	Specifies the maximum number of basic cycles when working as potential time master
TEW	Specify the width of Tx_Enable
TCMR0	Init_Watch_Trigger (compare match with Local Time)
TCMR1	Compare match with Cycle Time to monitor users-specified events
TCMR2	Watch_Trigger (compare match with Cycle Time). This can be programmed to abort all pending transmissions
TTW	Specifies the attribute of a time window used for transmission
TTTSEL	Specifies the next Mailbox waiting for transmission

- Time Master/Time Slave

This module can be programmed to work as a potential time master of the network or as a time slave. The following table shows the settings and the operation automatically performed by this module in each mode.

chanhvinh.com

mode	requested setting	function
Time Slave	TXPR[30] = 0 & MBC[30]!= 3'b000 & CMAX!= 3'b111 & MBC[31] = 3'b011	TCNTR is sampled at each SOF detected on the CAN Bus and stored into an internal register. When a valid Time Reference Message is received into Mailbox-31 the value of TCNTR (stored at the SOF) is copied into Ref_Mark. CCR embedded in the received Reference Message is copied to CCR. If Next_is_Gap = 1, IRR13 is set.
(Potential) Time Master	TXPR[30] = 1 & MBC[30] = 3'b000 & DLC[30] > 0 & CMAX!= 3'b111 & MBC[31] = 3'b011	Two cases are covered: (1) When a valid Time Reference message is received into Mailbox-31 the value of TCNTR stored into an internal register at the SOF is copied into Ref_Mark. CCR embedded in the received Reference Message is copied to CCR. If Next_is_Gap = 1, IRR13 is set. (2) When a Time Reference message is transmitted from Mailbox-30 the value of TCNTR stored into an internal register at the SOF is copied into Ref_Mark. CCR is incremented when TTT of Mailbox-30 matches with CYCTR . CCR is embedded into the first data byte of the time reference message { Data0[7:6], CCR[5:0] } .

- Setting Tx-Trigger Time

The Tx-Trigger Time(TTT) must be set in ascending order shown below, and the difference between them has to satisfy the following expressions. TEW in the following expressions is the register value.

TTT (Mailbox-24) < TTT (Mailbox-25) < TTT (Mailbox-26) < TTT (Mailbox-27) < TTT (Mailbox-28) < TTT (Mailbox-29) < TTT (Mailbox-30)

and

TTT (Mailbox-i) – TTT (Mailbox- i-1) > TEW + the maximum frame length + 9

TTT (Mailbox-24) to TTT (Mailbox-29) correspond to Time_Marks, and TTT (Mailbox-30) corresponds to Time_Ref showing the length of a basic cycle, respectively when working as potential time master.

chanhvinh.com

The above limitation is not applied to mailboxes which are not set as time-triggered transmission.

Important: Because of limitation on setting Tx-Trigger Time, only one Mailbox can be assigned to one time window.

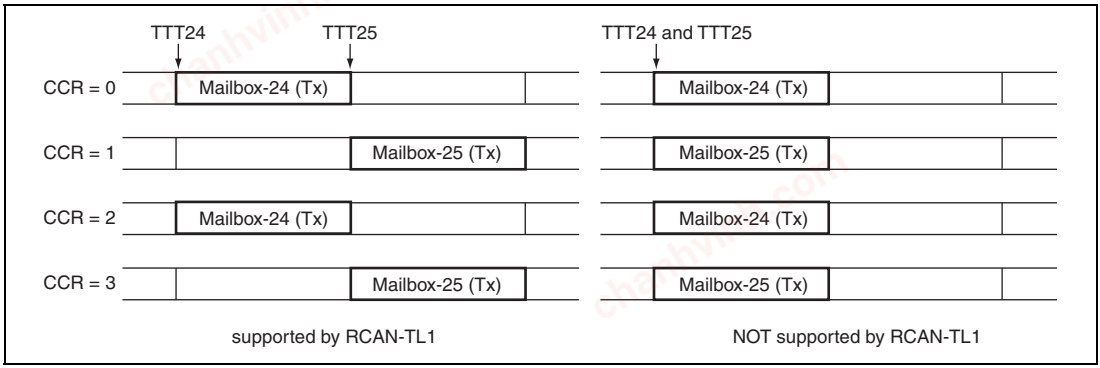

Figure 23.18 Limitation on Tx-Trigger Time

The value of TCMR2 as Watch_Trigger has to be larger than TTT(Mailbox-30), which shows the length of a basic cycle.

chanhvinh.com

Figures 23.19 and 23.20 show examples of configurations for (Potential) Time Master and Time Slave. "L" in diagrams shows the length in time of the time reference messages.

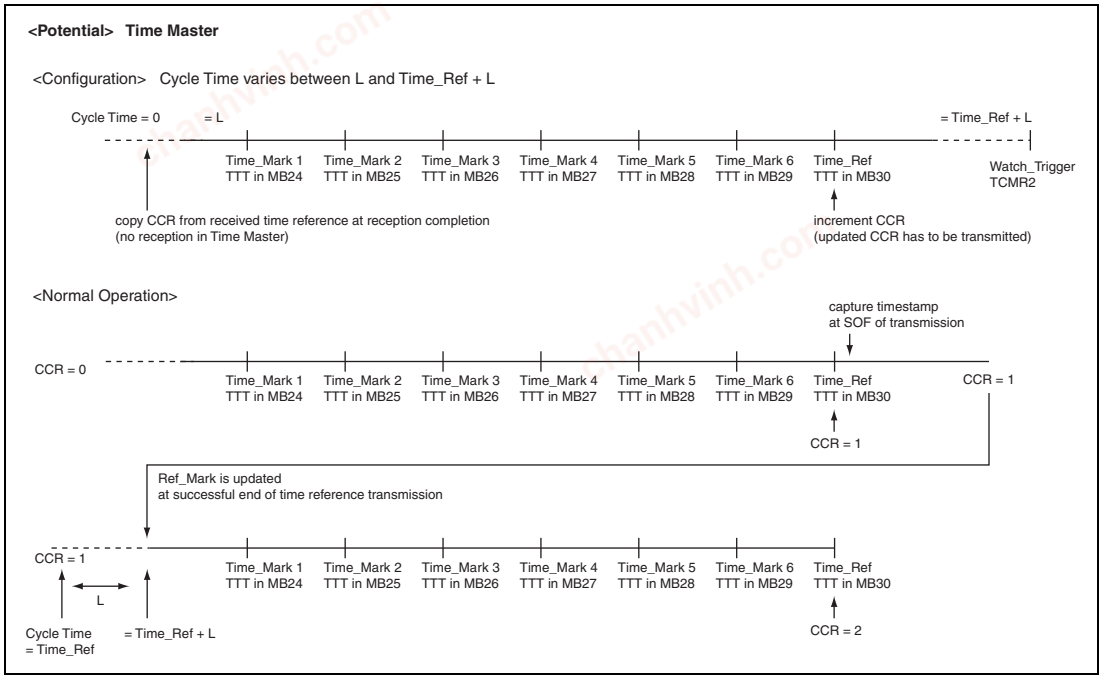

Figure 23.19 (Potential) Time Master

chanhvinh.com

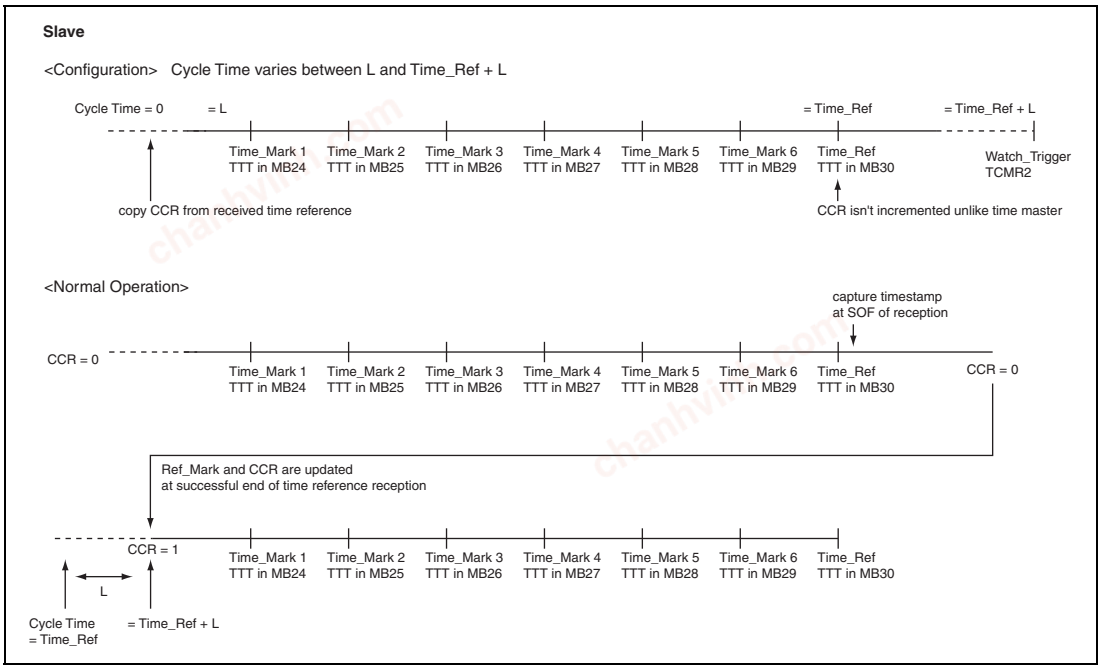

Figure 23.20 Time Slave

- Function to be implemented by software

Some of the TTCAN functions need to be implemented in software. The main details are reported hereafter. Please refer to ISO-11898-4 for more details.

— Change from Init_Watch_Trigger to Watch_Trigger

This module offers the two registers TCMR0 and TCMR2 as H/W support for Init_Watch_Trigger and Watch_Trigger respectively. The SW is requested to enable TCMR0 and disable TCMR2 up to the first reference message is detected on the CAN Bus and then disable TCMR0 and enable TCMR2.- Schedule Synchronization state machine.

Only reception of Next_is_Gap interrupt is supported. The application needs to take care of stopping all transmission at the end of the current basic cycle by setting the related TXCR flags.Master-Slave Mode control.

Only automatic cycle time synchronization and CCR increment is supported.

— Message status count

Software has to count scheduling errors for periodic messages in exclusive windows.

chanhvinh.com

- Message Transmission Request for Time Triggered communication

When the Time Triggered mode is used communications must fulfils the ISO11898-4 requirements.

The following procedure should be used.

  — Send this module to reset or halt mode
  — Set TCMR0 to the Init_Watch_Trigger (0xFFFF)
  — Enable TCMR0 compare match setting bit 10 of TTCR0
  — Set TCMR2 to the specified Watch_Trigger value
  — Keep TCMR2 compare match disabled by keeping cleared the bit 12 of TTCR0
  — Set CMAX to the requested value (different from 111 bin)
  — Set TEW to the requested value
  — Configure the necessary Mailboxes for Time Trigger transmission and reception
  — Set LAFM for the 3 LSBs of Mailbox 31
  — Configure MCR, BCR1 and BCR0 to the requested values
  — If working as a potential time master:

- Set RFTROFF to the requested Init_Ref_Offset value
- Set TXPR for Mailbox 30
- Write H'4000 into TTTSEL
  — Enable the TCNTR timer through the bit 15 of TTCR0
  — Move to Transmission_Reception mode
  — Wait for the reception or transmission of a valid reference message or for TCMR0 match
  — If the local time reaches the value of TCMR0 the Init_Watch_Trigger is reached and the application needs to set TXCR for Mailbox 30 and start again
  — If the reference message is transmitted (TXACK[30] is set) set RFTROFF to zero
  — If a valid reference message is received (RXPR[31] is set) then:
- If 3 LSBs of ID of Mailbox 31 have high priority than the 3 LSBs of Mailbox 30 (if working as potential time master) keep RFTROFF to Init_Ref_Offset
- If 3 LSBs of ID of Mailbox 31 have lower priority than the 3 LSBs of Mailbox 30 (if working as potential time master) decrement by 1 the value in RFTROFF
  — Disable TCMR0 compare match by clearing bit 10 of TTCR0
  — Enable TCMR2 compare match by setting bit 12 of TTCR0
  — Only after two reference messages have been detected on the CAN Bus (transmitted or received) can the application set TXPR for the other Time Triggered Mailboxes.

chanhvinh.com

If, at any time, a reference message cannot be detected on the CAN Bus, and the cycle time CYCTR reaches TCMR2, this module automatically aborts all pending transmissions (including the Reference Message).

The following is the sequence to request further transmission in Time Triggered mode.

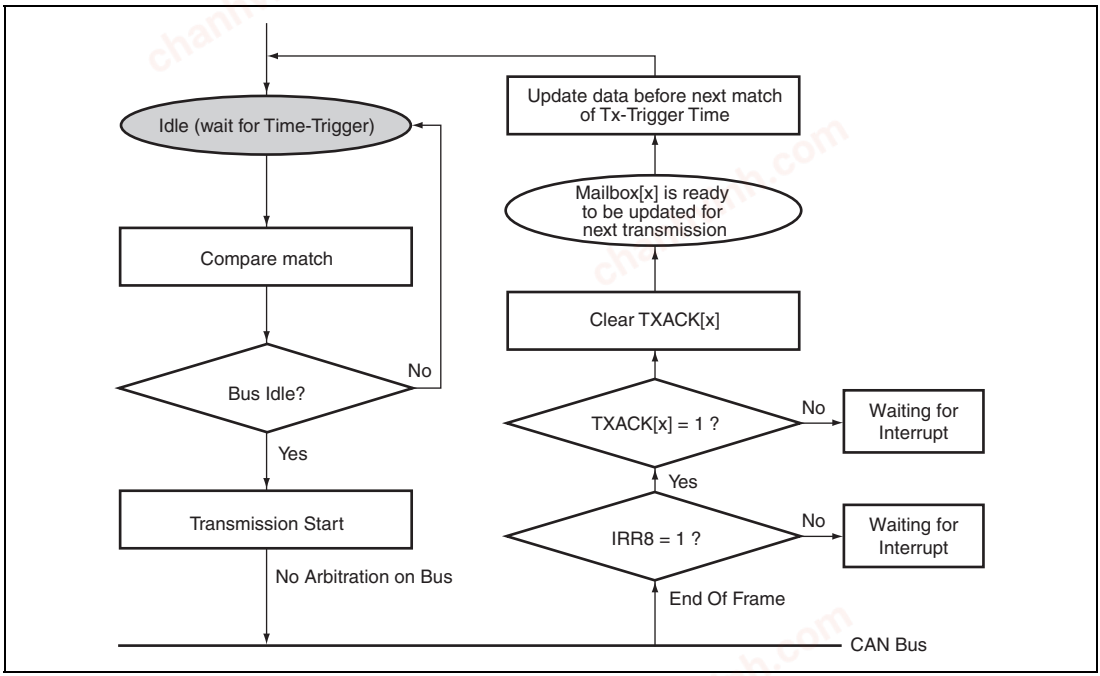

Figure 23.21 Message transmission request

S/W has to ensure that a message is updated before a Tx trigger for transmission occurs.

When the CYCTR reaches to TTT (Tx-Trigger Time) of a Mailbox and CCR matches with the programmed cycle for transmission, this module immediately transfers the message into the Tx buffer. At this point, this module will attempt a transmission within the specified Time Enable Window. If this module misses this time slot, it will suspend the transmission request up to the next Tx Trigger, keeping the corresponding TXPR bit set to '1' if the transmission is periodic (Mailbox-24 to 30). There are three factors that may cause this module to miss the time slot –

1. The CAN bus currently used
2. An error on the CAN bus during the time triggered message transmission
3. Arbitration loss during the time triggered message transmission

chanhvinh.com

In case of Merged Arbitrating Window the slot for transmission goes from the Tx_Trig of the Mailbox opening the Window (TTW = 10 bin) to the end to the TEW of the Mailbox closing the Window (TTW = 11 bin).The TXPR can be modified at any time. This module ensures the transmission of Time Triggered messages is always scheduled correctly. However, in order to guarantee the correct schedule, there are some important rules that are :

— TTT (Tx Trigger Time) can be modified during configuration mode.
— TTT cannot be set outside the range of Time_Ref, which specifies the length of basic cycle. This could cause a scheduling problem.
— TXPR is not automatically cleared for periodic transmission. If a periodic transmission needs to be cancelled, the corresponding TXCR bit needs to be set by the application.

- Example of Time Triggered System

The following diagram shows a simple example of how time trigger system works using this module in time slave mode.

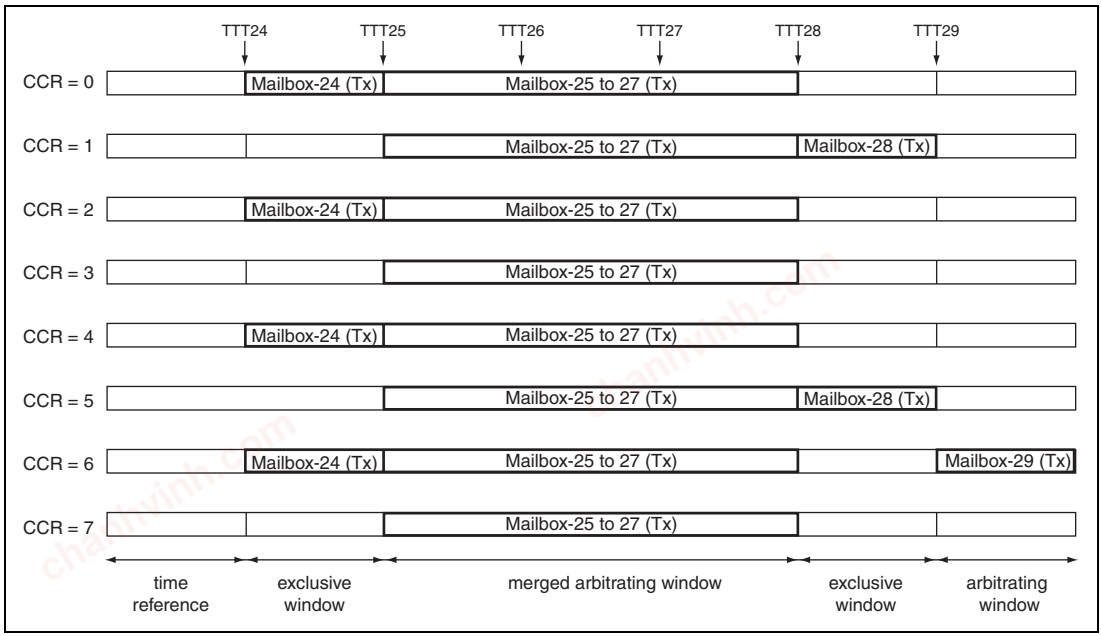

Figure 23.22 Example of Time trigger system as Time Slave

chanhvinh.com

The following settings were used in the above example:

	rep_factor (register)	Offset	TTW[1:0]	MBC[2:0]
Mailbox-24	3'b001	6'b000000	2'b00	3'b000
Mailbox-25	3'b000	6'b000000	2'b10	3'b000
Mailbox-26	3'b000	6'b000000	2'b10	3'b000
Mailbox-27	3'b000	6'b000000	2'b11	3'b000
Mailbox-28	3'b010	6'b000001	2'b00	3'b000
Mailbox-29	3'b011	6'b000110	2'b01	3'b000
Mailbox-30	—	—	—	3'b111
Mailbox-31	—	—	—	3'b011

CMAX = 3'b011, TXPR[30] = 0

During merged arbitrating window, request by time-triggered transmission is served in the way of FCFS (First Come First Served). For example, if Mailbox-25 cannot be transmitted between Tx-Trigger Time 25 (TTT25) and TTT26, Mailbox-25 has higher priority than Mailbox-26 between TTT26 and 28.

MBC needs to be set into 3'b111, in order to disable time-triggered transmission. If this module is Time Master, MBC[30] has to be 3'b000 and time reference window is automatically recognized as arbitrating window.

- Timer Operation

Figure 23.23 shows the timing diagram of the timer. By setting Tx-Trigger Time = n, time trigger transmission starts between CYCTR = n + 2 and
CYCTR = n + 3.

chanhvinh.com

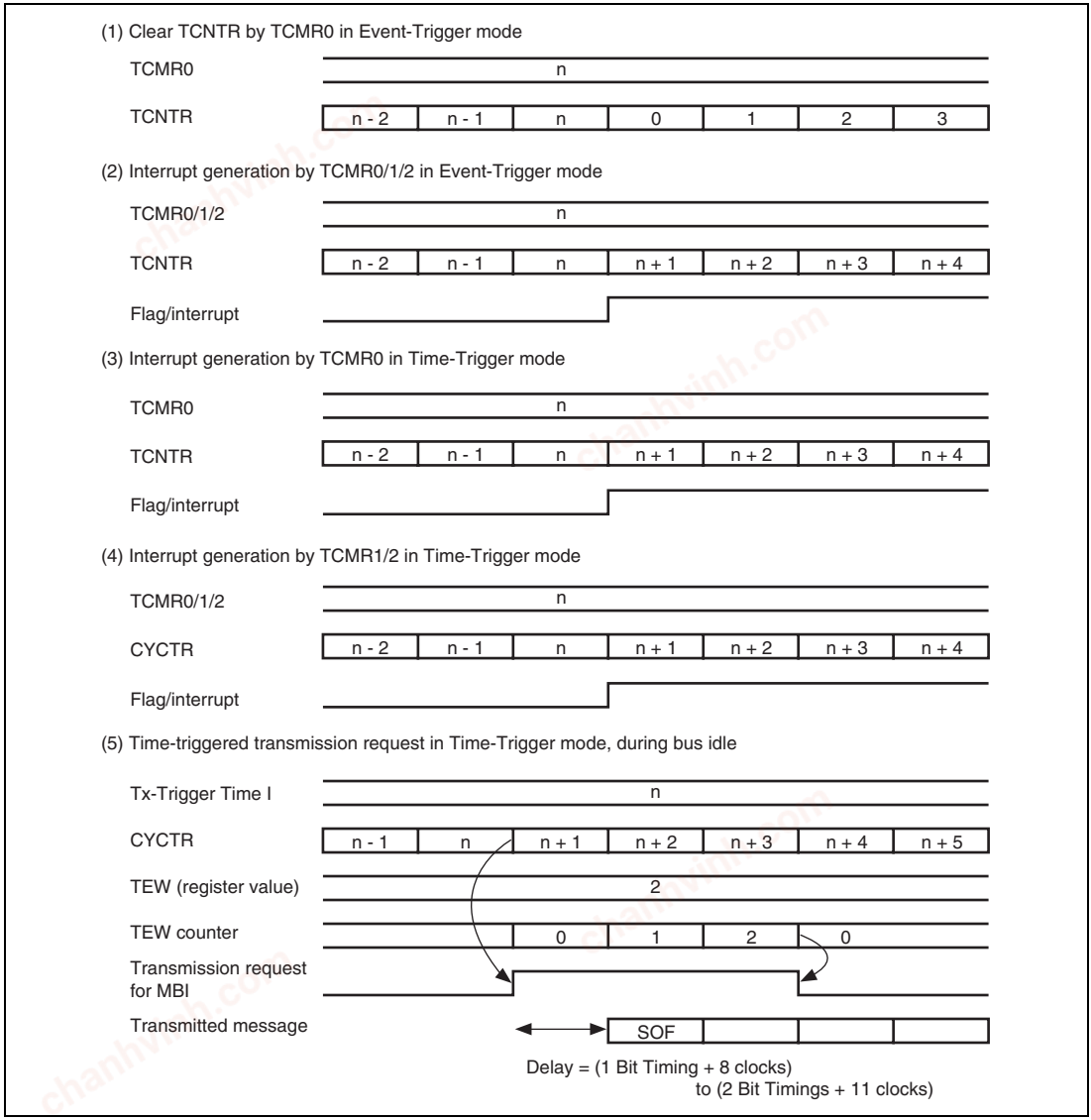

Figure 23.23 Timing Diagram of Timer

chanhvinh.com

During merged arbitrating window, event-trigger transmission is served after completion of time-triggered transmission. For example, If transmission of Mailbox-25 is completed and CYCTR doesn't reach TTT26, event-trigger transmission starts based on message transmission priority specified by MCR2. TXPR of time-triggered transmission is not cleared after transmission completion, however, that of event-triggered transmission is cleared.

Note: that in the case that the TXPR is not set for the Mailbox which is assigned to close the Merged Arbitrating Window (MAW), then the MAW will still be closed (at the end of the TEW following the TTT of the assigned Mailbox.

Please refer to Table Roles of Mailboxes in section 23.3.2, Mailbox Structure.

chanhvinh.com

23.4.4 Message Receive Sequence

The diagram below shows the message receive sequence.

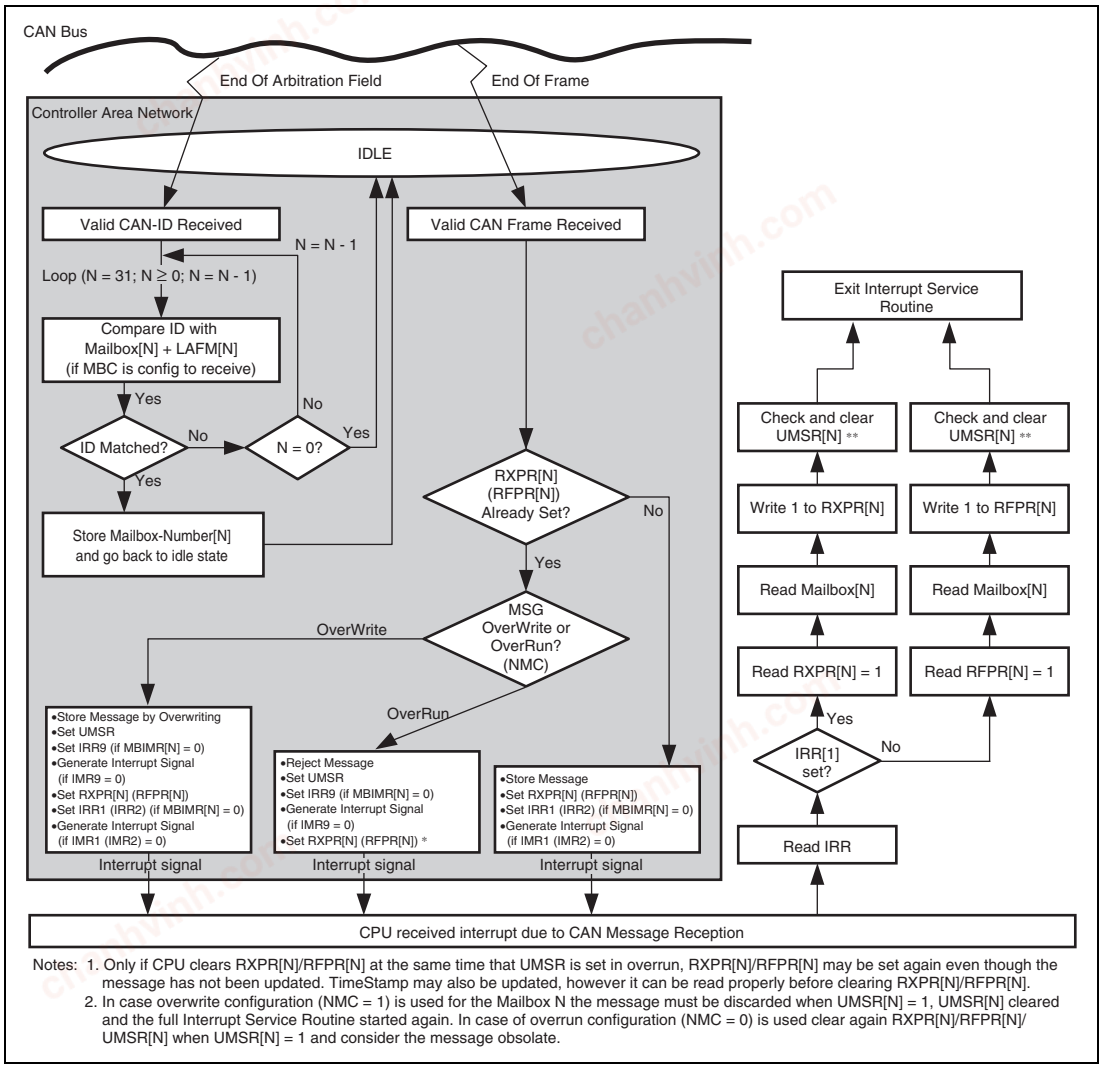

Notes: 1. Only if CPU clears RXPR[N]/RFPR[N] at the same time that UMSR is set in overrun, RXPR[N]/RFPR[N] may be set again even though the message has not been updated. TimeStamp may also be updated, however it can be read properly before clearing RXPR[N]/RFPR[N].
2. In case overwrite configuration (NMC = 1) is used for the Mailbox N the message must be discarded when UMSR[N] = 1, UMSR[N] cleared and the full Interrupt Service Routine started again. In case of overrun configuration (NMC = 0) is used clear again RXPR[N]/RFPR[N]/UMSR[N] when UMSR[N] = 1 and consider the message obsolate.

Figure 23.24 Message receive sequence

chanhvinh.com

When this module recognises the end of the Arbitration field while receiving a message, it starts comparing the received identifier to the identifiers set in the Mailboxes, starting from Mailbox-31 down to Mailbox-0. It first checks the MBC if it is configured as a receive box, and reads LAFM, and reads the CAN-ID of Mailbox-31 (if configured as receive) to finally compare them to the received ID. If it does not match, the same check takes place at Mailbox-30 (if configured as receive). Once this module finds a matching identifier, it stores the number of Mailbox-[N] into an internal buffer, stops the search, and goes back to idle state, waiting for the EndOfFrame (EOF) to come. When the 6th bit of EOF is notified by the CAN Interface logic, the received message is written or abandoned, depending on the NMC bit. No modification of configuration during communication is allowed. Entering Halt Mode is one of ways to modify configuration. If it is written into the corresponding Mailbox, including the CAN-ID, i.e., there is a possibility that the CAN-ID is overwritten by a different CAN-ID of the received message due to the LAFM used. This also implies that, if the identifier of a received message matches to ID + LAFM of 2 or more Mailboxes, the higher numbered Mailbox will always store the relevant messages and the lower numbered Mailbox will never receive messages. Therefore, the settings of the identifiers and LAFMs need to be carefully selected.

With regards to the reception of data and remote frames described in the above flow diagram the clearing of the UMSR flag after the reading of IRR is to detect situations where a message is overwritten by a new incoming message stored in the same mailbox (if its NMC = 1) while the interrupt service routine is running. If during the final check of UMSR a overwrite condition is detected the message needs to be discarded and read again.

In case UMSR is set and the Mailbox is configured for overrun (NMC = 0) the message is still valid, however it is obsolete as it is not reflecting the latest message monitored on the CAN Bus.

Please access the full Mailbox content before clearing the related RXPR/RFPR flag.

Please note that in the case a received remote frame is overwritten by a data frame, both the remote frame receive interrupt (IRR2) and data frame received interrupt (IRR1) and also the Receive Flags (RXPR and RFPR) are set. In an analogous way, the overwriting of a data frame by a remote frame, leads to setting both IRR2 and IRR1.

When a message is received and stored into a Mailbox all the fields of the data not received are stored as zero. The same applies when a standard frame is received. The extended identifier part (EXTID[17:0]) is written as zero.

chanhvinh.com

23.4.5 Reconfiguration of Mailbox

When re-configuration of Mailboxes is required, the following procedures should be taken.

- Change configuration of transmit box

  Two cases are possible.

  — Change of ID, RTR, IDE, LAFM, Data, DLC, NMC, ATX, DART

  This change is possible only when MBC = 3'b000. Confirm that the corresponding TXPR is not set. The configuration (except MBC bit) can be changed at any time.

  — Change from transmit to receive configuration (MBC)

  Confirm that the corresponding TXPR is not set. The configuration can be changed only in Halt or reset state. Please note that it might take longer for this module to transit to halt state if it is receiving or transmitting a message (as the transition to the halt state is delayed until the end of the reception/transmission), and also this module will not be able to receive/transmit messages during the Halt state.

  In case this module is in the Bus Off state the transition to halt state depends on the configuration of the bit 6 of MCR and also bit and 14 of MCR.

- Change configuration (ID, RTR, IDE, LAFM, Data, DLC, NMC, ATX, DART, MBC) of receiver box or Change receiver box to transmitter box

  The configuration can be changed only in Halt Mode.

  This module will not lose a message if the message is currently on the CAN bus and this module is a receiver. This module will be moving into Halt Mode after completing the current reception. Please note that it might take longer if this module is receiving or transmitting a message (as the transition to the halt state is delayed until the end of the reception/transmission), and also this module will not be able to receive/transmit messages during the Halt Mode.

  In case this module is in the Bus Off state the transition to halt mode depends on the configuration of the bit 6 and 14 of MCR.

chanhvinh.com

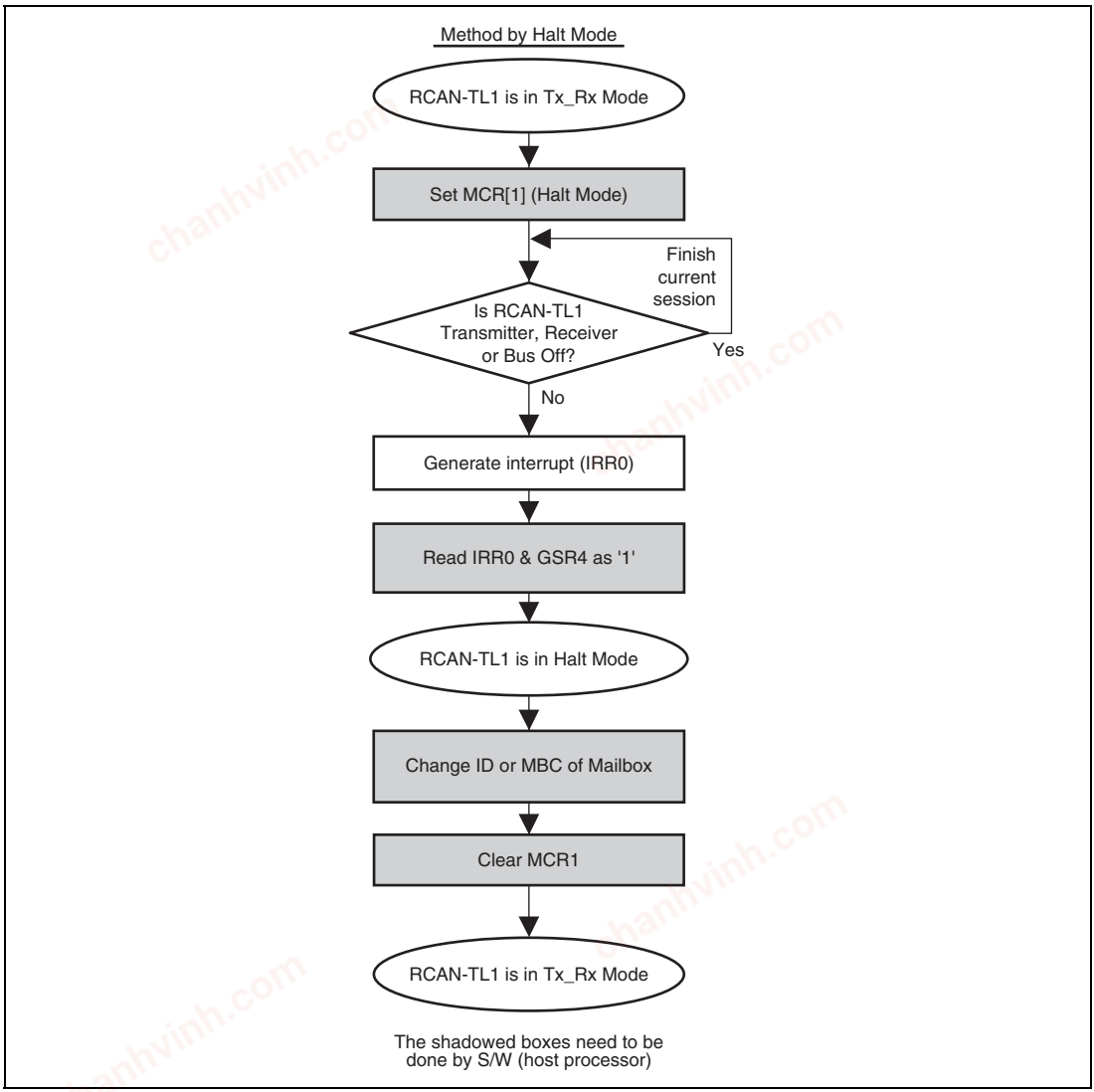

Figure 23.25 Change ID of receive box or Change receive box to transmit box

chanhvinh.com

23.5 Interrupt Sources

Table 23.2 lists this module interrupt sources. These sources can be masked. Masking is implemented using the mailbox interrupt mask registers (MBIMR) and interrupt mask register (IMR). For details on the interrupt vector of each interrupt source, see section 7, Interrupt Controller.

Table 23.2 Interrupt Sources

Interrupt	Description	Interrupt Flag	DMAC Activation
ERSn*[1]	Error Passive Mode (TEC ≥ 128 or REC ≥ 128)	IRR5	Not possible
	Bus Off (TEC ≥ 256)/Bus Off recovery	IRR6	
	Error warning (TEC ≥ 96)	IRR3	
	Error warning (REC ≥ 96)	IRR4	
OVRn*[1]	Reset/halt/CAN sleep transition	IRR0	
	Overload frame transmission	IRR7	
	Unread message overwrite (overrun)	IRR9	
	Start of new system matrix	IRR10	
	TCMR2 compare match	IRR11	
	Bus activity while in sleep mode	IRR12	
	Timer overrun/Next_is_Gap reception/message error	IRR13	
	TCMR0 compare match	IRR14	
	TCMR1 compare match	IRR15	
RM0n*[1]*[2], RM1n*[1]*[2]	Data frame reception	IRR1*[3]	Possible*[4]
	Remote frame reception	IRR2*[3]	
SLEn*[1]	Message transmission/transmission disabled (slot empty)	IRR8	Not possible

Notes: 1. n = 0 to 2

2. RM0 is an interrupt generated by the remote request pending flag for mailbox 0 (RFPR0[0]) or the data frame receive flag for mailbox 0 (RXPR0[0]). RM1 is an interrupt generated by the remote request pending flag for mailbox n (RFPR0[n]) or the data frame receive flag for mailbox n (RXPR0[n]) (n = 1 to 31).
3. IRR1 is a data frame received interrupt flag for mailboxes 0 to 31, and IRR2 is a remote frame request interrupt flag for mailboxes 0 to 31.
4. The direct memory access controller is activated only by an RM0n interrupt.

chanhvinh.com

23.6 DMAC Interface

The DMAC can be activated by the reception of a message in mailbox 0. When DMAC transfer ends after DMAC activation has been set, flags of RXPR0 and RFPR0 are cleared automatically. An interrupt request due to a receive interrupt from this module cannot be sent to the CPU in this case. Figure 23.26 shows a DMAC transfer flowchart.

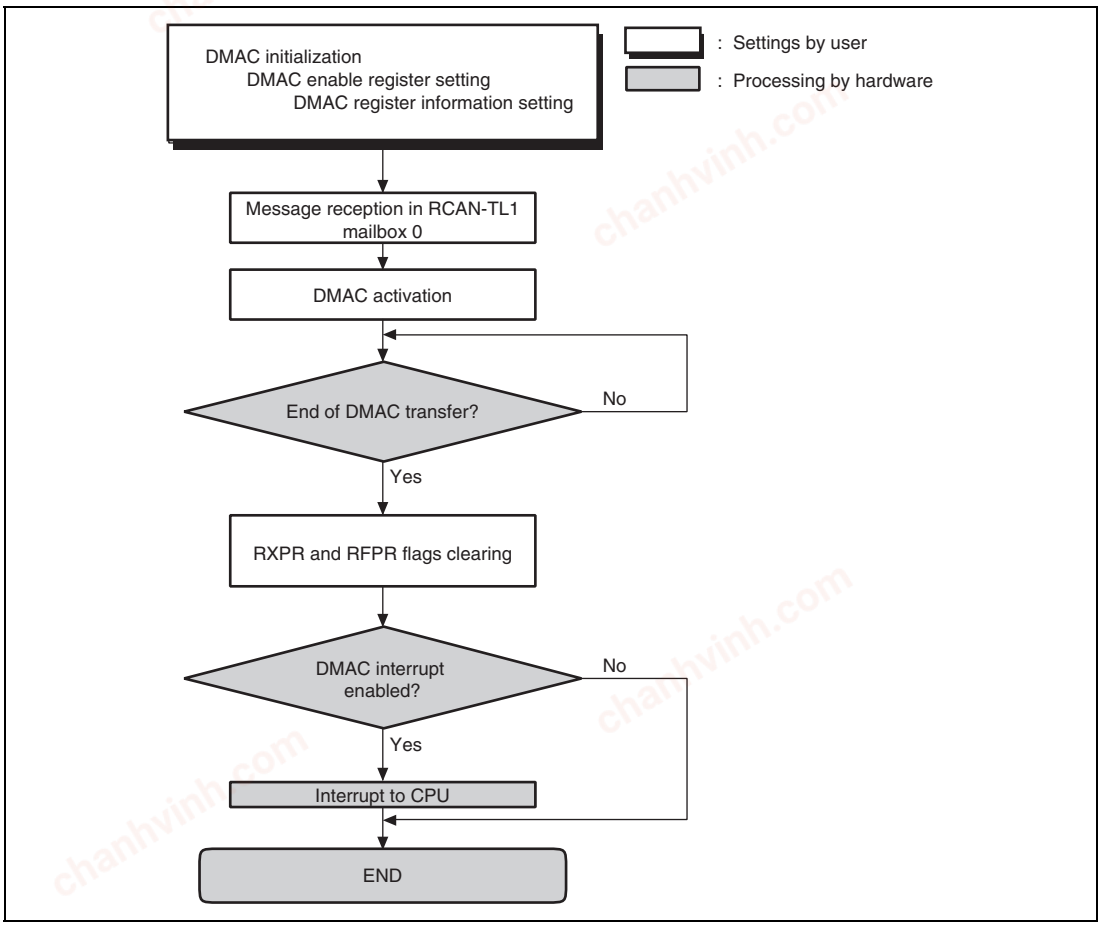

Figure 23.26 DMAC Transfer Flowchart

chanhvinh.com

23.7 CAN Bus Interface

A bus transceiver IC is necessary to connect this LSI to a CAN bus. A Renesas HA13721 transceiver IC and its compatible products are recommended. Figure 23.27 shows a sample connection diagram.

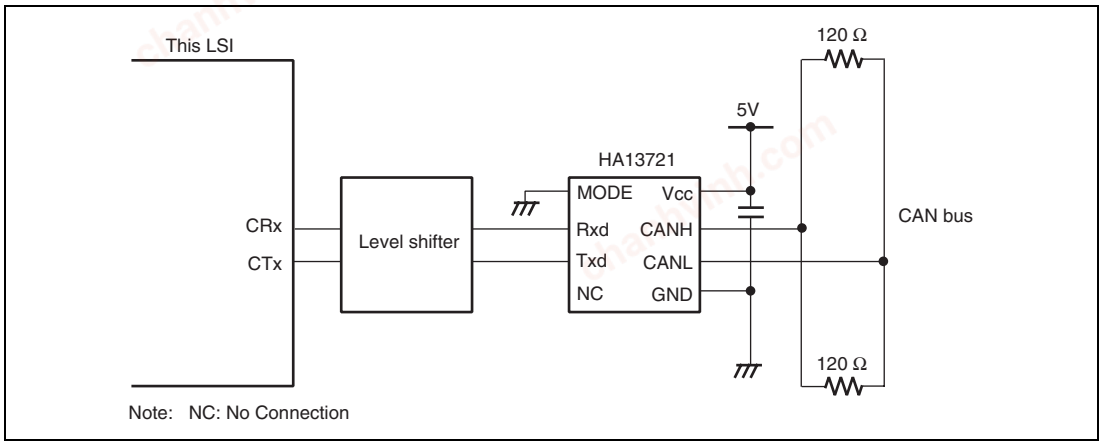

Figure 23.27 High-Speed CAN Interface Using HA13721

chanhvinh.com

23.8 Setting I/O Ports

The I/O ports for this module must be specified before or during the configuration mode. For details on the settings of I/O ports, see section 48, General Purpose I/O Ports. Three methods are available using three channels of this module in this LSI.

- 32 Mailboxes × 3 channels
- 64 Mailboxes × 1 channel (RCAN0 and RCAN1) and 32 Mailboxes × 1 channel (RCAN2)
- 96 Mailboxes × 1 channel

When the 64- or 96-Mailbox method is used, see section 23.9.1, Notes on Port Setting for Multiple Channels Used as Single Channel with 64 or 96 Mailboxes.

Figures 23.28, 23.29, and 23.30 show connection examples for individual port settings.

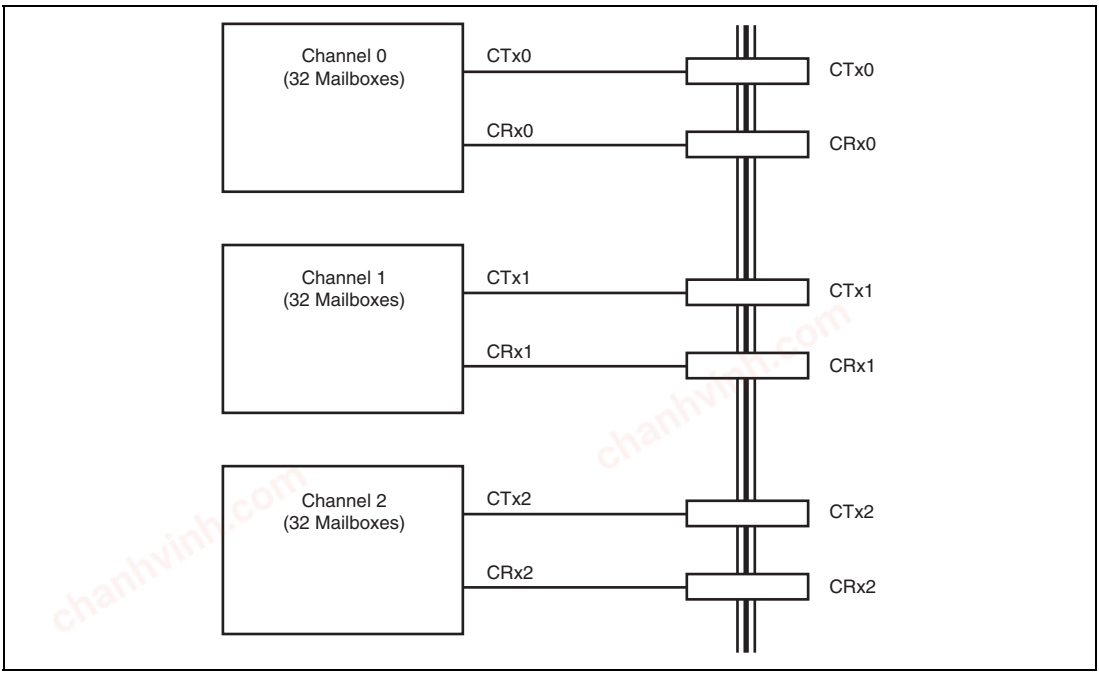

Figure 23.28 Connection Example when Using Each of Channels 0, 1 and 2 Independently (32 Mailboxes × 3 Channels)

chanhvinh.com

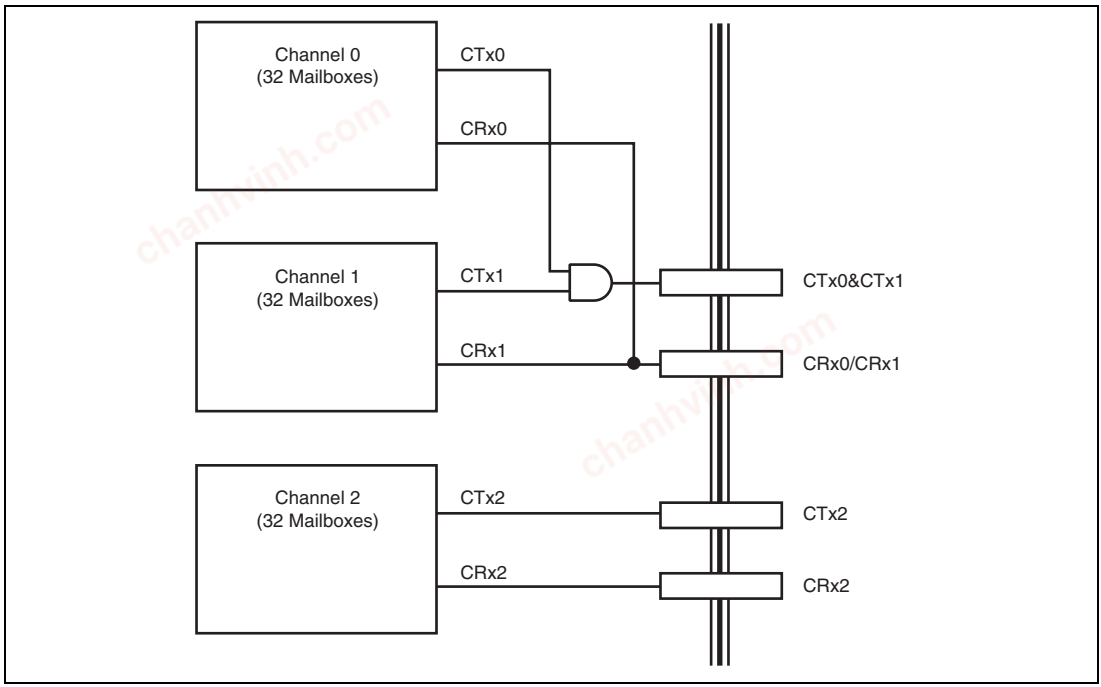

Figure 23.29 Connection Example when Using Channels 0 and 1 as One Channel (64 Mailboxes × 1 Channel) and Channel 2 as One Channel (32 Mailboxes × 1 Channel)

chanhvinh.com

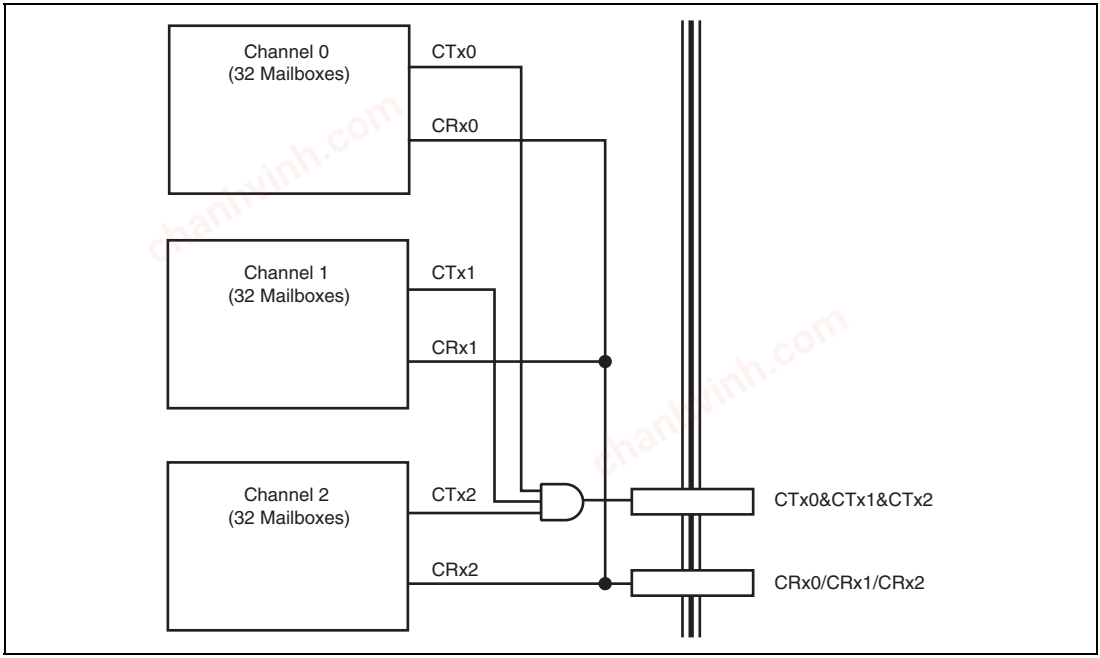

Figure 23.30 Connection Example when Using Channels 0, 1, and 2 as One Channel (96 Mailboxes × 1 Channel)

chanhvinh.com

23.9 Usage Notes

23.9.1 Notes on Port Setting for Multiple Channels Used as Single Channel with 64 or 96 Mailboxes

This module in this LSI has three channels and some of these channels can be used as a single channel. When using multiple channels as a single channel with 64 or 96 Mailboxes, keep the following in mind.

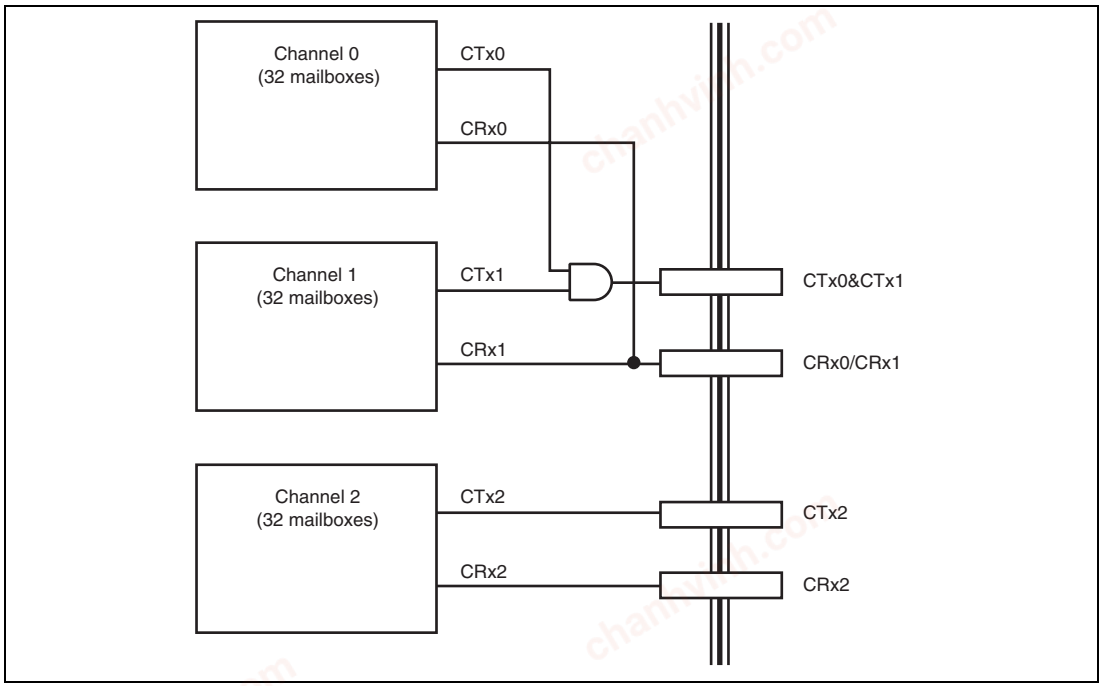

Figure 23.31 Connection Example when Using Channels 0 and 1 as One Channel (64 Mailboxes × 1 Channel) and Channel 2 as One Channel (32 Mailboxes × 1 Channel)

1. No ACK error is detected even when any other nodes are not connected to the CAN bus. This occurs when channel 1 transmits an ACK in the ACK field in response to a message channel 0 has transmitted.

   Channel 1 receives a message which channel 0 has transmitted on the CAN bus and then transmits an ACK in the ACK field. After that, channel 0 receives the ACK.

   To avoid this, make channel 1 which is not currently used for transmission the listen-only mode (TST[2:0] = B'001) or the reset state (MCR0 = 1). With this setting, only a channel which transmits a message transmits an ACK.

chanhvinh.com

2. Internal arbitration for channels 0 and 1 is independently controlled to determine the order of transmission.

   Although the internal arbitration is performed on 31 Mailboxes at a time, it is not performed on 64 Mailboxes at a time even though multiple channels function as a single channel.

3. Do not set the same transmission message ID in both channels 0 and 1.

   Two messages may be transmitted from the two channels after arbitration on the CAN bus.

chanhvinh.com

Section 24 IEBus™ Controller

This LSI has an on-chip one-channel IEBus controller. The Inter Equipment Bus™ (IEBus™)* is a small-scale digital data transfer system for inter-equipment data transfer.

This LSI does not have an on-chip IEBus driver/receiver, so it is necessary to mount a dedicated driver/receiver externally. In addition, as the IERxD and IETxD pins need 3V to operate, a dedicated external level shifter is necessary.

Note: * The Inter Equipment Bus™ (IEBus™) is a trademark of Renesas Electronics Corporation.

24.1 Features

- IEBus protocol control (layer 2) supported
  - Half-duplex asynchronous communications
  - Multi-master system
  - Broadcast communications function
  - Selectable mode (three types) with different transfer speeds
- On-chip buffers for data transmission and reception
  - Transmission and reception buffers: 128 bytes each
  - Up to 128 bytes of consecutive transmit/reception (maximum number of transfer bytes in mode 2)
- Operating frequency
  - 12 MHz, 12.58 MHz (This module uses 1/2 divided clocks of AUDIO_X1* or AUDIO_X2*.)
  - 18 MHz, 18.87 MHz (This module uses 1/3 divided clocks of AUDIO_X1* or AUDIO_X2*.)
  - 24 MHz, 25.16 MHz (This module uses 1/4 divided clocks of P0ϕ, AUDIO_X1*, or AUDIO_X2*.)
  - 30 MHz, 31.45 MHz (This module uses 1/5 divided clocks of P0ϕ, AUDIO_X1*, or AUDIO_X2*.)
  - 36 MHz, 37.74 MHz (This module uses 1/6 divided clocks of AUDIO_X1* or AUDIO_X2*.)
  - 42 MHz, 44.03 MHz (This module uses 1/7 divided clocks of AUDIO_X1* or AUDIO_X2*.)
  - 48 MHz (This module uses 1/8 divided clocks of AUDIO_X1* or AUDIO_X2*.)

chanhvinh.com

Note: * Available as this module clock input only when not used as the clock input for serial sound interface, serial I/O with FIFO, or Renesas SPDIF interface.

- Module standby mode can be set.

chanhvinh.com

24.1.1 IEBus Communications Protocol

An overview of the IEBus is provided below.

- Communications method: Half-duplex asynchronous communications
- Multi-master system
  All units connected to the IEBus can transfer data to other units.
- Broadcast communications function (one-to-many communications)
  — Group broadcast communications: Broadcast communications to group unit
  — General broadcast communications: Broadcast communications to all units
- Mode is selectable (three modes with different transfer speeds)

Table 24.1 Mode Types

Mode	IEBϕ*1 = 12, 18, 24*2, 30, 36, 42, 48 MHz	IEBϕ*1 = 12.58, 18.87*2, 25.16, 31.45, 37.74, 44.03 MHz	Maximum Number of Transfer Bytes (byte/frame)
0	About 3.9 kbps	About 4.1 kbps	16
1	About 17 kbps	About 18 kbps	32
2	About 26 kbps	About 27 kbps	128

Notes: 1. Peripheral clock 0 (P0ϕ), or clocks for AUDIO_X1 and AUDIO_X2
2. Oscillation frequency when this LSI is used

- Access control: CSMA/CD (Carrier Sense Multiple Access with Collision Detection)
  Priority of bus mastership is as follows.
  — Broadcast communications (one-to-many communications) have priority over normal communications (one-to-one communications).
  — A smaller master address has priority.
- Communications scale
  — Number of units: Up to 50
  — Cable length: Up to 150 m (when using a twisted-pair cable)

Note: The communications scale of the actual system depends on the characteristics of the externally mounted IEBus driver/receiver and the cable used.

chanhvinh.com

(1) Determination of Bus Mastership (Arbitration)

A unit connected to the IEBus performs an operation to get the bus to control other units. This operation is called arbitration. In arbitration, when multiple units start transferring simultaneously, the bus mastership is given to one unit among them.

Only one unit can obtain bus mastership through arbitration, so the following priority for bus mastership is determined.

(a) Priority according to communications type

Broadcast communications (one-to-many communications) has priority over normal communications (one-to-one communications).

(b) Priority according to master address

The unit with the smallest master address has priority among units of the same communications type.

Example: The master address is configured with 12 bits. A unit with H'000 has the highest priority, while a unit with H'FFF has the lowest priority.

Note: When a unit loses in arbitration, the unit can automatically enter retransfer mode (0 to 7 retransfer times can be selected by the RN bit in IEMCR).

chanhvinh.com

(2) Communications Mode

The IEBus has three communications modes with different transfer speeds. Table 24.2 shows the transfer speed in each communications mode and the maximum number of transfer bytes in one communications frame.

Table 24.2 Transfer Speed and Maximum Number of Transfer Bytes in Each Communications Mode

Communications Mode	Maximum Number of Transfer Bytes (bytes/frame)	Effective Transfer Speed*1 (kbps)	
		IEBϕ*2 = 12, 18, 24, 30, 36, 42, 48 MHz*3	IEBϕ*2 = 12.58, 18.87, 25.16, 31.45, 37.74, 44.03 MHz*3
0	16	About 3.9	About 4.1
1	32	About 17	About 18
2	128	About 26	About 27

Notes: Each unit connected to the IEBus should select a communications mode prior to performing communications. Note that correct communications is not guaranteed if the master and slave units do not adopt the same communications mode.

In the case of communications between a unit with IEBϕ = 6 MHz and a unit with IEBϕ = 6.29 MHz, correct communications are not possible even if the same communications mode is adopted. Communications must be done with the same oscillation frequency.

1. Effective transfer speed when the maximum number of transfer bytes is transmitted.
2. Peripheral clock 0 (P0ϕ), or clocks for AUDIO_X1 and AUDIO_X2
3. Oscillation frequency when this LSI is used

(3) Communications Address

In the IEBus, a specific 12-bit communications address is allocated to each individual unit. A communications address is configured as follows.

- Upper four bits: group number (number identifying a group to which the unit belongs)
- Lower eight bits: unit number (number identifying individual units in a group)

chanhvinh.com

(4) Broadcast Communications

In normal transfer, a single master unit communicates with a single slave unit, so one-to-one transfer or reception takes place. In broadcast communications, a single master unit communicates with multiple slave units. Since there are multiple slave units, no acknowledgements are returned from the slave units during communications.

A broadcast bit decides whether broadcast or normal communications is done. (For details of the broadcast bit, see section 24.1.2 (1) (b), Broadcast Bit.

There are two types of broadcast communications.

(a) Group broadcast communications

Broadcast communications is aimed at units with the same group number, meaning that those units have the same upper four bits of the communications address.

(b) General broadcast communications

Broadcast communications is aimed at all units regardless of group number.

Group broadcast and general broadcast communications are identified by a slave address. (For details on the slave address, see section 24.1.2 (3), Slave Address Field.)

chanhvinh.com

24.1.2 Communications Protocol

Figure 24.1 shows an IEBus transfer signal format.

Communications data is transferred as a series of signals referred to as a communications frame. The number of data, which can be transmitted in a single communications frame and the transfer speed, differs according to the communications mode.

(When IEBϕ = 12, 18, 24, 30, or 36 MHz)

Field name	Header		Master address field		Slave address field			Control field			Message length field			Data field					
Number of bits	1	1	12	1	12	1	1	4	1	1	8	1	1	8	1	1	8	1	1
	Start bit	Broad-cast bit	Master address	P	Slave address	P	A	Control bits	P	A	Message length bits	P	A	Data bits	P	A	Data bits	P	A
Transfer time																			
Mode 0	Approximately 7330 µs													Approximately 1590 × N µs					
Mode 1	Approximately 2090 µs													Approximately 410 × N µs					
Mode 2	Approximately 1590 µs													Approximately 300 × N µs					

P: Parity bit (1 bit)
A: Acknowledge bit (1 bit)
When A = 0: ACK
When A = 1: NAK
N: Number of bytes

Note: The value of acknowledge bit is ignored in broadcast communications.

Figure 24.1 Transfer Signal Format

(1) Header

A header is comprised of a start bit and a broadcast bit.

(a) Start Bit

The start bit is a signal to inform other units of the start of data transfer. A unit attempting to start data transfer outputs a low-level signal (the start bit) for a specified period and then outputs the broadcast bit.

If another unit is already outputting a start bit when a unit attempts to output a start bit, the unit waits for completion of the start bit from the other unit without outputting its own start bit, and then outputs the broadcast bit synchronized with the completion timing.

Other units enter the receive state after detecting the start bit.

chanhvinh.com

(b) Broadcast Bit

The broadcast bit is a bit to identify the type of communications: broadcast or normal.

When this bit is cleared to 0, it indicates broadcast communications. When it is set to 1, it indicates normal communications. Broadcast communications includes group broadcast and general broadcast, which are identified by a value of the slave address. (For details of the slave address, see section 24.1.2 (3), Slave Address Field.)

Since multiple slave units are communications destination units, in the case of broadcast communications, the acknowledge bit is not returned from each field described in (2) and below.

When more than one unit starts to transfer a communications frame with the same timing, broadcast communications has priority over normal communications, and arbitration occurs.

(2) Master Address Field

The master address field is a field for transmitting the unit address (master address) to other units. The master address field is comprised of master address bits and a parity bit.

The master address consists of 12 bits and the MSB is output first.

When more than one unit start to transfer broadcast bits having the same value with the same timing, arbitration is decided by the master address field.

In the master address field, self-output data and data on the bus are compared for every one-bit transfer. If the self-output master address and data on the bus are different, the unit that loses arbitration will stop its transfer and enter the receive state.

Since the IEBus is configured with wired AND, the unit having the smallest master address of the units in arbitration (arbitration master) wins in arbitration.

Finally, only a single unit remains in the transfer state as a master unit after outputting a 12-bit master address.

Next, this master unit outputs a parity bit*, defines the master address for other units, and then enters the slave address field output state.

Note: * Since even parity is used, when the number of one bit in the master address is odd, the parity bit is 1.

chanhvinh.com

(3) Slave Address Field

The slave address field is a field to transmit an address (the slave address) of a unit (the slave unit) to be transmitted. The slave address field is comprised of slave address bits, a parity bit, and an acknowledge bit.

The slave address consists of 12 bits and the MSB is output first. The parity bit is output after the 12-bit slave address is transmitted to avoid receiving the slave address accidentally. The master unit then detects the acknowledgement from the slave unit to confirm that the slave unit exists on the bus. When the acknowledgement is detected, the master unit enters the control field output state. However, the master unit enters the control field output state without detecting the acknowledgement in broadcast communications.

The slave unit returns an acknowledgement when the slave addresses match and the parities of the master and slave addresses are correct. When the parity of either the master or slave address is incorrect, the slave unit decides that the master or slave address was not correctly received and does not return the acknowledgement. In this case, the master unit enters the waiting (monitor) state and communications ends.

In the case of broadcast communications, the slave address is used to identify the type of broadcast communications (group or general) as follows:

- When the slave address is H'FFF: General broadcast communications
- When the slave address is other than H'FFF: Group broadcast communications

Note: The group number is the upper 4-bit value of the slave address in group broadcast communications.

(4) Control Field

The control field is a field for transmitting the type and direction of the following data field. The control field is comprised of control bits, a parity bit, and an acknowledge bit.

The control bits consist of four bits and the MSB is output first.

The parity bit is output following the control bits. When the parity is correct, and the slave unit can implement the function required from the master unit, the slave unit returns an acknowledgement and enters the message length field output state. However, if the slave unit cannot implement the requirements from the master unit even though the parity is correct, or if the parity is not correct, the slave unit does not return an acknowledgement and returns to the waiting (monitor) state.

chanhvinh.com

The master unit enters the subsequent message length field output state after confirming the acknowledgement.

When the acknowledgement is not confirmed, the master unit enters the waiting (monitor) state, and communications ends. However, in the case of broadcast communications, the master unit enters the following message length field output state without confirming the acknowledgement. For details of the contents of the control bit, see table 24.4.

(5) Message Length Field

The message length field is a field for specifying the number of transfer bytes. The message length field is comprised of message length bits, a parity bit, and an acknowledge bit.

The message length has eight bits and the MSB is output first. Table 24.3 shows the number of transfer bytes.

Table 24.3 Contents of Message Length bits

Message Length bits (Hexadecimal)	Number of Transfer Bytes
H'01	1 byte
H'02	2 bytes
:	:
H'FF	255 bytes
H'00	256 bytes

Note: If a number greater than the maximum number of transfer bytes in one frame is specified, communications are done in multiple frames depending on the communications mode. In this case, the message length bits indicate the number of remaining communications data after the first transfer. In this LSI, the message length bits must be smaller than the maximum number of transfer bytes in one frame. Set these within the ranges shown below.
Mode 0: 1 to 16 bytes
Mode 1: 1 to 32 bytes
Mode 2: 1 to 128 bytes

This field operation differs depending on the value of bit 3 in the control field: master transmission (the bit 3 of the control bits is 1) or master reception (the bit 3 of the control bits is 0).

chanhvinh.com

(a) Master Transmission

The master unit outputs the message length bits and the parity bit. When the parity is even, the slave unit returns an acknowledgement and enters the following data field. Note that the slave unit does not return an acknowledgement in broadcast communications.

When the parity is odd, the slave unit decides that the message length field is not correctly received, does not return an acknowledgement, and returns to the waiting (monitor) state. In this case, the master unit also returns to the waiting state and communications end.

(b) Master Reception

The slave unit outputs the message length bits and parity bit. When even parity is confirmed, the master unit returns an acknowledgement.

When the parity is not correct, the master unit decides that the message length bits are not correctly received, does not return an acknowledgement, and returns to the waiting state. In this case, the slave unit also returns to the waiting state and communications end.

(6) Data Field

The data field is a field for data transmission/reception to and from the slave unit. The master unit transmits/receives data to and from the slave unit using the data field. The data field is comprised of data bits, a parity bit, and an acknowledge bit.

The data bits consist of eight bits and the MSB is output first.

The parity and acknowledge bits are output following the data bits from the master unit and slave unit, respectively.

Broadcast communications are performed only for the transmission of the master unit. In this case, the acknowledge bit is ignored. Operations in master transmission and master reception are described below.

chanhvinh.com

(a) Master Transmission

The master unit transmits the data bits and parity bit to the slave unit to write data from the master unit to the slave unit. The slave unit receives the data bits and parity bit, and returns an acknowledgement if the parity bit is even and the receive buffer is empty. If the parity bit is odd or the receive buffer is not empty, the slave unit does not accept the corresponding data and does not return an acknowledgement.

When the slave unit does not return an acknowledgement, the master unit retransmits the data. This operation is repeated until either an acknowledgement from the slave unit is detected or the maximum number of data transfer bytes is reached.

When the parity is even and the acknowledgement is output from the slave unit, the master unit transmits the subsequent data if data remains and the maximum number of transfer bytes is not exceeded.

In the case of broadcast communications, the slave unit does not return the acknowledgement, and the master unit transfers data byte by byte.

(b) Master Reception

The master unit outputs synchronous signals corresponding to all data bits to be read from the slave unit.

The slave unit outputs the data bits and parity bit on the bus in accordance with the synchronous signals from the master unit.

The master unit reads the parity bit output from the slave unit, and checks the parity. If the parity is not even, or the receive buffer is not empty, the master unit rejects acceptance of the data, and does not return the acknowledgement. The master unit reads the same data repeatedly if the number of data does not exceed the maximum number of transfer bytes in one frame. If the parity is even and the receive buffer is empty, the master unit accepts data and returns an acknowledgement. The master unit reads in the subsequent data if the number of data does not exceed the maximum number of transfer bytes in one frame.

chanhvinh.com

(7) Parity bit

The parity bit is used to confirm that transfer data occurs with no errors.

The parity bit is added to respective data of the master address, slave address, control, message length, and data bits.

Even parity is used. When the number of bits having the value 1 is odd, the parity bit is 1. When the number of bits having the value 1 is even, the parity bit is 0.

(8) Acknowledge bit

In normal communications (single unit to single unit communications), the acknowledge bit is added in the following positions to confirm that data is correctly accepted.

- At the end of the slave address field
- At the end of the control field
- At the end of the message length field
- At the end of the data field

The acknowledge bit is defined below.

- 0: indicates that the transfer data is acknowledged. (ACK)
- 1: indicates that the transfer data is not acknowledged. (NAK)

Note that the acknowledge bit is ignored in the case of broadcast communications.

(a) Acknowledge bit at the End of the Slave Address Field

The acknowledge bit at the end of the slave address field becomes NAK in the following cases and transfer is stopped.

- When the parity of the master address or slave address bits is incorrect
- When a timing error (an error in bit format) occurs
- When there is no slave unit

chanhvinh.com

(b) Acknowledge bit at the End of the Control Field

The acknowledge bit at the end of the control field becomes NAK in the following cases and transfer is stopped.

- When the parity of the control bits is incorrect
- When the bit 3 of the control bits is 1 (data write) although the slave receive buffer* is not empty
- When the control bits are set to data read (H'3, H'7) although the slave transmit buffer* is empty
- When another unit which locked the slave unit requests H'3, H'6, H'7, H'A, H'B, H'E, or H'F in the control bits although the slave unit has been locked
- When the control bits are the locked address read (H'4, H'5) although the unit is not locked
- When a timing error occurs
- When the control bits are undefined

Note: See section 24.1.3 (1), Slave Status Read (Control Bits: H'0, H'6).

(c) Acknowledge Bit at the End of the Message Length Field

The acknowledge bit at the end of the message length field becomes NAK in the following cases and transfer is stopped.

- When the parity of the message length bits is incorrect
- When a timing error occurs

(d) Acknowledge Bit at the End of the Data Field

The acknowledge bit at the end of the data field becomes NAK in the following cases and transfer is stopped.

- When the parity of the data bits is incorrect*
- When a timing error occurs after the previous transfer of the acknowledge bit
- When the receive buffer becomes full and cannot accept further data*

Note: * In this case, the data field is transferred repeatedly until the number of data reaches the maximum number of transfer bytes if the number of data does not exceed the maximum number of transfer bytes in one frame.

chanhvinh.com

24.1.3 Transfer Data (Data Field Contents)

The data field contents are specified by the control bits.

Table 24.4 Control Bit Contents

Setting Value	Bit 3*[1]	Bit 2	Bit 1	Bit 0	Function*[2]
H'0	0	0	0	0	Reads slave status (SSR)
H'1	0	0	0	1	Undefined.
H'2	0	0	1	0	Undefined.
H'3	0	0	1	1	Reads data and locks
H'4	0	1	0	0	Reads locked address (lower 8 bits)
H'5	0	1	0	1	Reads locked address (upper 4 bits)
H'6	0	1	1	0	Reads slave status (SSR) and unlocks
H'7	0	1	1	1	Reads data
H'8	1	0	0	0	Undefined.
H'9	1	0	0	1	Undefined.
H'A	1	0	1	0	Writes command and locks
H'B	1	0	1	1	Writes data and locks
H'C	1	1	0	0	Undefined.
H'D	1	1	0	1	Undefined.
H'E	1	1	1	0	Writes command
H'F	1	1	1	1	Writes data

Notes: 1. Depending on the value of bit 3 (MSB), the transfer directions of the message length bits in the following message length field and data in the data field vary.
When bit 3 is 1: Data is transferred from the master unit to the slave unit.
When bit 3 is 0: Data is transferred from the slave unit to the master unit.
2. H'3, H'6, H'A, and H'B are control bits to specify lock setting and cancellation.
When the undefined values of H'1, H'2, H'8, H'9, H'C, and H'D are transmitted, the acknowledge signal is not returned.

When the control bits received from another unit which locked are not included in table 24.5, the slave unit which has been locked by the master unit does not accept the control bits and does not return the acknowledge bit.

chanhvinh.com

Table 24.5 Control Field for Locked Slave Unit

Setting Value	Bit 3	Bit 2	Bit 1	Bit 0	Function
H'0	0	0	0	0	Reads slave status
H'4	0	1	0	0	Reads locked address (upper 8 bits)
H'5	0	1	0	1	Reads locked address (lower 4 bits)

(1) Slave Status Read (Control Bits: H'0, H'6)

The master unit can decide the reason the slave unit does not return the acknowledgement (ACK) by reading the slave status (H'0, H'6). The slave status indicates the result of the last communications that the slave unit performed. All slave units can provide slave status information. Figure 24.2 shows the bit configuration of the slave status.

MSB LSB

Bit 7	Bit 6	Bit 5	Bit 4	Bit 3	Bit 2	Bit 1	Bit 0

Bit	Value	Description	
Bit 7, bit 6	00	Mode 0	Indicates the highest mode supported by a unit. *1
	01	Mode 1	
	10	Mode 2	
	11	For future use	
Bit 5	0	Fixed 0	
Bit 4*2	0	Slave transmission halted	
	1	Slave transmission enabled	
Bit 3	0	Fixed 0	
Bit 2	0	Unit is unlocked	
	1	Unit is locked	
Bit 1*3	0	Slave receive buffer is empty	
	1	Slave receive buffer is not empty	
Bit 0*4	0	Slave transmit buffer is empty	
	1	Slave transmit buffer is not empty	

Notes: 1. Since this LSI can support up to mode 2, bits 6 and 7 are fixed to 10.
2. The value of bit 4 can be selected by the STE bit in the IEBus master unit address register 1 (IEAR1).
3. The slave receive buffer is a buffer which is accessed during data write (control bits: H'A, H'B, H'E, H'F).
In this LSI, the slave receive buffer corresponds to the IEBus receive buffer register (IERB001 to IERB128); and bit 1 is the value of the RXBSY bit in the IEBus receive status register (IERSR).
4. The slave transmit buffer is a buffer which is accessed during data read (control bits: H'3, H'7).
In this LSI, the slave transmit buffer corresponds to the IEBus transmit buffer register (IETB001 to IETB128) and bit 0 is the value of the SRQ bit in the IEBus general flag registers (IEFLG).

Figure 24.2 Bit Configuration of Slave Status (SSR)

chanhvinh.com

(2) Data Command Transfer (Control Bits: Read (H'3, H'7), Write (H'A, H'B, H'E, H'F))

In the case of data read (H'3, H'7), data in the data buffer of the slave unit is read in the master unit. In the case of data write (H'B or H'F) or command write (H'A or H'E), data received in the slave unit is processed in accordance with the operation specification of the slave unit.

Notes: 1. The user can select data and commands freely in accordance with the system.
2. H'3, H'A, or H'B may lock depending on the communications condition and status.

(3) Locked Address Read (Control Bits: H'4, H'5)

In the case of the locked address read (H'4 or H'5), the address (12 bits) of the master unit, which issues the lock instruction, is configured in bytes as shown in figure 24.3.

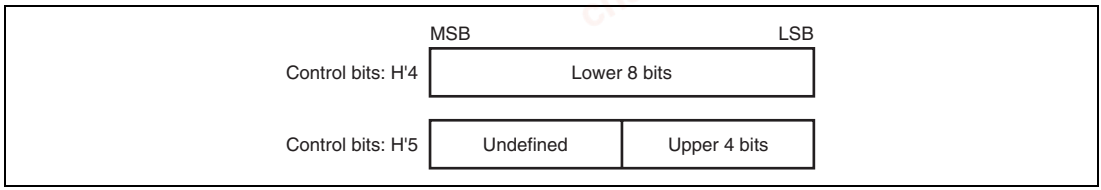

Figure 24.3 Locked Address Configuration

(4) Locking/Unlocking (Control Bits: Setting (H'3, H'A, H'B), Cancellation: (H'6))

The lock function is used for message transfer over multiple communications frames. A locked unit receives data only from the unit which locked it.

Locking and unlocking are described below.

(a) Locking

When an acknowledge bit of 0 in the message length field is transmitted/received with the control bits (H'3, H'A, H'B) indicating the lock operation, and then the communications frame is completed before completion of data transmission/reception for the number of bytes specified by the message length bits, the slave unit is locked by the master unit. In this case, the bit (bit 2) relevant to locking in the byte data indicating the slave status is set to 1.

Lock is set only when the number of data exceeds the maximum number of transfer bytes in one frame. Lock is not set by other error terminations.

chanhvinh.com

(b) Unlocking

When the control bits indicate the lock (H'3, H'A, or H'B) or unlock (H'6) operation and the byte data for the number of bytes specified by the message length bits are transmitted/received in a single communications frame, the slave unit is unlocked by the master unit. In this case, the bit (bit 2) relevant to locking in the byte indicating the slave status is cleared to 0.

Note that locking and unlocking are not done in broadcast communications.

Note: * There are three ways to cause a locked unit to unlock itself.
- Perform a power-on reset
- Put the unit in deep standby mode
- Issue an unlock command through the IEBus command register (IECMR)

Note that the LCK flag in IEFLG can be used to check whether the unit is locked or unlocked.

24.1.4 Bit Format

Figure 24.4 shows the bit format (conceptual diagram) configuring the IEBus communications frame.

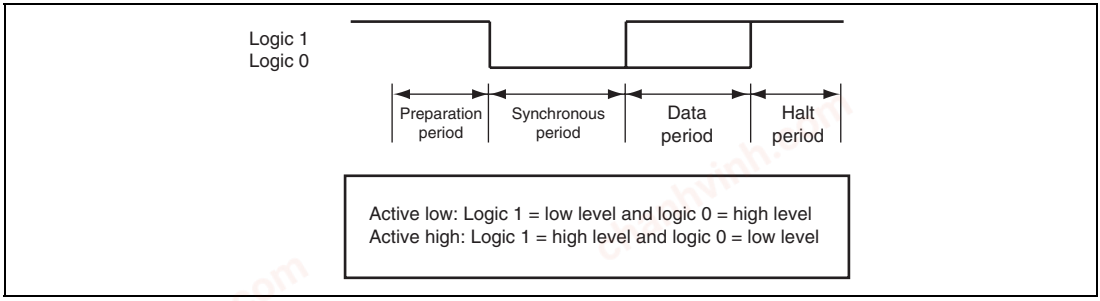

Figure 24.4 IEBus Bit Format (Conceptual Diagram)

Each period of the bit format for use of active high signals is described below.

- Preparation period: first logic 1 period (high level)
- Synchronous period: subsequent logic 0 period (low level)
- Data period: period indicating bit value (logic 1: high level, logic 0: low level)
- Halt period: last logic 1 period (high level)

chanhvinh.com

For use of active low signals, levels are reversed from the active high signals.

The synchronous and data periods have approximately the same length.

The IEBus is synchronized bit by bit. The specifications for the time of all bits and the periods allocated to the bits differ depending on the type of transfer bits and the unit (master or slave unit).

24.1.5 Configuration

Figure 24.5 shows the entire block configuration and table 24.6 lists the functions of each block.

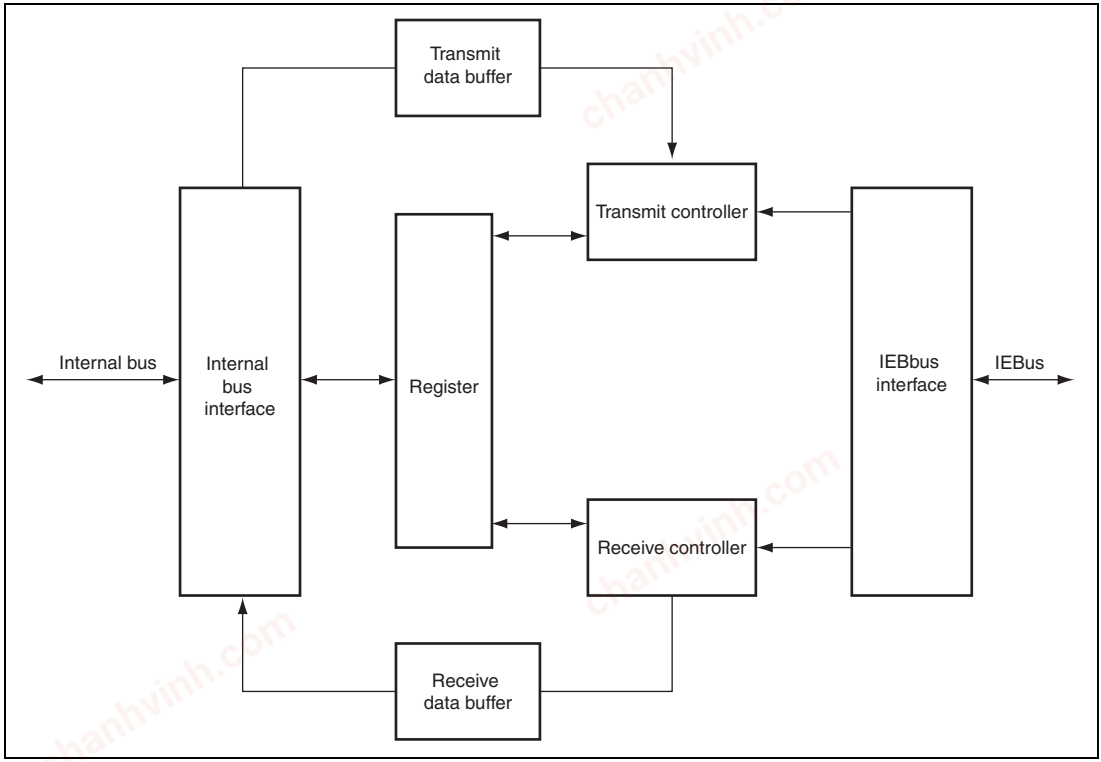

Figure 24.5 Block Diagram

chanhvinh.com

Table 24.6 Functions of Each Block

Block	Function
Internal bus interface	Internal bus interface
	• Data width: 8 bits • Register access
IEBus interface	Interface conforms to IEBus specifications
	• Outputs data from transmit controller to IEBus in IEBus specification bit format • Picks out frame data in IEBus specification bit format to transfer to receive controller
Register	Control register
	• Register to control this module • Readable/writable from internal bus
Transmit controller	Transmits data in transmit buffer to IEBus
	• Generates transmit frame combining header information in register and data in transmit buffer to transmits • Detects transmit error
Receive controller	Stores data from IEBus in receive buffer
	• Stores header information and data in received frame in register and receive buffer, respectively • Detects receive error
Transmit data buffer	Buffer for data transmission
	• Buffer that stores data to be transmitted to IEBus • Buffer size: 128 bytes
Receive data buffer	Buffer for data reception
	• Buffer that stores data received from IEBus • Buffer size: 128 bytes

24.2 Input/Output Pins

Table 24.7 Pin Configuration

Name	Abbreviation	I/O	Function
IEBus receive data pin	IERxD	Input	Receive data input pin
IEBus transmit data pin	IETxD	Output	Transmit data output pin

chanhvinh.com

24.3 Register Descriptions

Table 24.8 shows the register configuration.

Table 24.8 Register Configuration

Register Name	Abbreviation	R/W	Initial Value	Address	Access Size
IEBus control register	IECTR	R/W	H'00	H'FFFE F000	8
IEBus command register	IECMR	W	H'00	H'FFFE F001	8
IEBus master control register	IEMCR	R/W	H'00	H'FFFE F002	8
IEBus master unit address register 1	IEAR1	R/W	H'00	H'FFFE F003	8
IEBus master unit address register 2	IEAR2	R/W	H'00	H'FFFE F004	8
IEBus slave address setting register 1	IESA1	R/W	H'00	H'FFFE F005	8
IEBus slave address setting register 2	IESA2	R/W	H'00	H'FFFE F006	8
IEBus transmit message length register	IETBFL	R/W	H'00	H'FFFE F007	8
IEBus reception master address register 1	IEMA1	R	H'00	H'FFFE F009	8
IEBus reception master address register 2	IEMA2	R	H'00	H'FFFE F00A	8
IEBus receive control field register	IERCTL	R	H'00	H'FFFE F00B	8
IEBus receive message length register	IERBFL	R	H'00	H'FFFE F00C	8
IEBus lock address register 1	IELA1	R	H'00	H'FFFE F00E	8
IEBus lock address register 2	IELA2	R	H'00	H'FFFE F00F	8
IEBus general flag register	IEFLG	R	H'00	H'FFFE F010	8
IEBus transmit status register	IETSR	R/(W)*	H'00	H'FFFE F011	8
IEBus transmit interrupt enable register	IEIET	R/W	H'00	H'FFFE F012	8
IEBus receive status register	IERSR	R/(W)*	H'00	H'FFFE F014	8

chanhvinh.com

Register Name	Abbreviation	R/W	Initial Value	Address	Access Size
IEBus receive interrupt enable register	IEIER	R/W	H'00	H'FFFE F015	8
IEBus clock select register	IECKSR	R/W	H'01	H'FFFE F018	8
IEBus transmit data buffer registers 001 to 128	IETB001 to IETB128	W	Undefined	H'FFFE F100 to H'FFFE F17F	8
IEBus receive data buffer registers 001 to 128	IERB001 to IERB128	R	Undefined	H'FFFE F200 to H'FFFE F27F	8

Note: * Only 1 can be written to clear the flag.

chanhvinh.com

24.3.1 IEBus Control Register (IECTR)

IECTR is used to control the operation of this module.

Bit:	7	6	5	4	3	2	1	0
	-	IOL	DEE	-	RE	-	-	-
Initial value:	0	0	0	0	0	0	0	0
R/W:	R	R/W	R/W	R	R/W	R	R	R

Bit	Bit Name	Initial Value	R/W	Description
7	—	0	R	Reserved This bit is always read as 0. The write value should always be 0.
6	IOL	0	R/W	Input/Output Level Selects input/output pin level (polarity) for the IERxD and IETxD pins. 0: Pin input/output is set to active low. (Logic 1 is low level and logic 0 is high level.) 1: Pin input/output is set to active high. (Logic 1 is high level and logic 0 is low level.)
5	DEE	0	R/W	Broadcast Receive Error Interrupt Enable If this bit is set to 1, a reception error interrupt occurs when the receive buffer is not in the receive enabled state during broadcast reception (when the RE bit is not set to 1 or the RXBSY flag is set.). At this time, the master address is stored in IEBus reception master address register 1 and 2. While this bit is 0, a reception error interrupt does not occur when the receive buffer is not in the receive enabled state, and the reception stops and enters the wait state. The master address is not saved. 0: A broadcast receive error is not generated up to the control field. 1: A broadcast receive error is generated up to the control field.

chanhvinh.com

Bit	Bit Name	Initial Value	R/W	Description
4	—	0	R	Reserved This bit is always read as 0. The write value should always be 0.
3	RE	0	R/W	Receive Enable Enables/disables reception. This bit must be set at the initial setting before frame reception. 0: Reception is disabled. 1: Reception is enabled.
2 to 0	—	All 0	R	Reserved These bits are always read as 0. The write value should always be 0.

24.3.2 IEBus Command Register (IECMR)

IECMR issues commands to control communications. Since this register is a write-only register, the read value is undefined.

Bit:	7	6	5	4	3	2	1	0
	-	-	-	-	-	CMD		
Initial value:	0	0	0	0	0	0	0	0
R/W:	-	-	-	-	-	W	W	W

Bit	Bit Name	Initial Value	R/W	Description
7 to 3	—	All 0	—	Reserved These bits are always read as 0. The write value should always be 0.

chanhvinh.com

Bit	Bit Name	Initial Value	R/W	Description
2 to 0	CMD	000	W	Command These bits issue a command to control communications. When the CMX flag in IEFLG is set after the command issuance, the command is indicated to be in execution. When the CMX flag becomes 0, the operation state is entered. 000: No operation. Operation is not affected. 001: Unlock (required from other units)*1 010: Requires communications as the master 011: Stops master communications*2 100: Undefined bits*4 101: Requires data transfer from the slave 110: Stops data transfer from the slave*3 111: Undefined bits*4

Notes: 1. Do not execute this command in slave communications.
2. This command is valid during master communications (MRQ = 1). In other states, this command issuance is ignored. If this command is issued in master communications, the communications controller immediately enters the wait state. At this time, the issued master transmission request ends (MRQ = 0).
3. This command is valid during slave communications (SRQ = 1). In other states, this command issuance is ignored. Once this command is issued in slave transmission, the SRQ flag is 0 before slave transmission. Therefore, a transmit request from the master is not responded to. If a transmit request is issued during slave transmission, the transmission stops and the wait state is entered (SRQ = 0).
4. Undefined bits. Issuing this command does not affect operation.

chanhvinh.com

24.3.3 IEBus Master Control Register (IEMCR)

IEMCR sets the communication conditions for master communications.

Bit:	7	6	5	4	3	2	1	0
	SS	RN			CTL*1			
Initial value:	0	0	0	0	0	0	0	0
R/W:	R/W	R/W	R/W	R/W	R/W	R/W	R/W	R/W

Bit	Bit Name	Initial Value	R/W	Description
7	SS	0	R/W	Broadcast/Normal Communications Select Selects broadcast or normal communications for master communications. 0: Broadcast communications for master communications 1: Normal communications for master communications
6 to 4	RN	000	R/W	Retransmission Counts Set the number of times retransmission is done when arbitration is lost in master communications. If arbitration is lost, the TXEAL flag in IETSR is set and transmission ends. 000: 0 001: 1 010: 2 011: 3 100: 4 101: 5 110: 6 111: 7

chanhvinh.com

Bit	Bit Name	Initial Value	R/W	Description
3 to 0	CTL*[1]	0000	R/W	Control Set the control bits in the control field for master transmission. 0000: Reads slave status 0001: Undefined*[3] 0010: Undefined*[3] 0011: Reads data and locks*[2] 0100: Reads locked address (lower 8 bits) 0101: Reads locked address (upper 4 bits) 0110: Reads slave status and unlocks*[2] 0111: Reads data 1000: Undefined*[3] 1001: Undefined*[3] 1010: Writes command and locks*[2] 1011: Writes data and locks*[2] 1100: Undefined*[3] 1101: Undefined*[3] 1110: Writes command 1111: Writes data

Notes: 1. CTL3 decides the data transfer direction of the message length bits in the message length field and data bits in the data field:
CTL3 = 1: Transfer is from master unit to slave unit
CTL3 = 0: Transfer is from slave unit to master unit
2. Control bits to lock and unlock
3. Setting prohibited.

chanhvinh.com

24.3.4 IEBus Master Unit Address Register 1 (IEAR1)

IEAR1 sets the lower four bits of the master unit address and communications mode. In master communications, the master unit address becomes the master address field value. In slave communications, the master unit address is compared with the received slave address field.

Bit:	7	6	5	4	3	2	1	0
	IARL4				IMD		-	STE
Initial value:	0	0	0	0	0	0	0	0
R/W:	R/W	R/W	R/W	R/W	R/W	R/W	R	R/W

Bit	Bit Name	Initial Value	R/W	Description
7 to 4	IARL4	0000	R/W	Lower 4 Bits of IEBus Master Unit Address Set the lower 4 bits of the master unit address. This register becomes the master address field value. In slave communications, the master unit address is compared with the received slave address field.
3, 2	IMD	00	R/W	IEBus Communications Mode Set IEBus communications mode. 00: Communications mode 0 01: Communications mode 1 10: Communications mode 2 11: Setting prohibited
1	—	0	R	Reserved This bit is always read as 0. The write value should always be 0.
0	STE	0	R/W	Slave Transmission Setting Sets bit 4 in the slave status register. Transmitting the slave status register informs the master unit that the slave transmission enabled state is entered by setting this bit to 1. Note that this bit only sets the slave status register value and does not directly affect slave transmission. 0: Bit 4 in the slave status register is 0 (slave transmission stop state) 1: Bit 4 in the slave status register is 1 (slave transmission enabled state)

chanhvinh.com

24.3.5 IEBus Master Unit Address Register 2 (IEAR2)

IEAR2 sets the upper eight bits of the master unit address. In master communications, this register becomes the master address field value. In slave communications, this register is compared with the received slave address field.

Bit:	7	6	5	4	3	2	1	0
	IARU8							
Initial value:	0	0	0	0	0	0	0	0
R/W:	R/W	R/W	R/W	R/W	R/W	R/W	R/W	R/W

Bit	Bit Name	Initial Value	R/W	Description
7 to 0	IARU8	All 0	R/W	Upper 8 Bits of IEBus Master Unit Address Set the upper 8 bits of the master unit address. This register becomes the master address field value. In slave communications, the master unit address is compared with the received slave address field.

24.3.6 IEBus Slave Address Setting Register 1 (IESA1)

IESA1 sets the lower four bits of the communications destination slave unit address.

Bit:	7	6	5	4	3	2	1	0
	ISAL4				-	-	-	-
Initial value:	0	0	0	0	0	0	0	0
R/W:	R/W	R/W	R/W	R/W	R	R	R	R

Bit	Bit Name	Initial Value	R/W	Description
7 to 4	ISAL4	0000	R/W	Lower 4 Bits of IEBus Slave Address These bits set the lower 4 bits of the communication destination slave unit address.
3 to 0	—	All 0	R	Reserved These bits are always read as 0. The write value should always be 0.

chanhvinh.com

24.3.7 IEBus Slave Address Setting Register 2 (IESA2)

IESA2 sets the upper eight bits of the communications destination slave unit address.

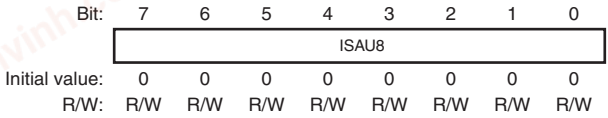

Bit	Bit Name	Initial Value	R/W	Description
7 to 0	ISAU8	All 0	R/W	Upper 8 Bits of IEBus Slave Address Set upper 8 bits of the communications destination slave unit address

24.3.8 IEBus Transmit Message Length Register (IETBFL)

IETBFL sets the message length for master or slave transmission.

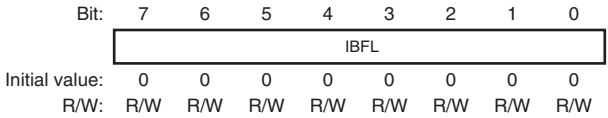

Bit	Bit Name	Initial Value	R/W	Description
7 to 0	IBFL	All 0	R/W	Transmit Message Length Set the message length for master transmission. Set the message length that does not exceed the maximum transmit bytes in communications mode. H'01: 1 byte H'02: 2 bytes : H'7F: 127 bytes H'80: 128 bytes H'81: Undefined* : H'FF: Undefined* H'00: Undefined*

Note: * Setting prohibited

chanhvinh.com

24.3.9 IEBus Reception Master Address Register 1 (IEMA1)

IEMA1 indicates the lower four bits of the communication destination master unit address in slave/broadcast reception.

Bit:	7	6	5	4	3	2	1	0
	IMAL4				-	-	-	-
Initial value:	0	0	0	0	0	0	0	0
R/W:	R	R	R	R	R	R	R	R

Bit	Bit Name	Initial Value	R/W	Description
7 to 4	IMAL4	0000	R	Lower Four Bits of IEBus Reception Master Address Indicates the lower four bits of the communication destination master unit address in slave/broadcast reception. This register is enabled when slave/broadcast reception starts, and the contents are changed at the time of setting the RXS flag. If a broadcast receive error interrupt is selected by the DEE bit in IECTR and the receive buffer is not in the receive enabled state at control field reception, a receive error interrupt is generated and the lower four bits of the master address are stored in IEMA1.
3 to 0	—	All 0	R	Reserved These bits are always read as 0. The write value should always be 0.

chanhvinh.com

24.3.10 IEBus Reception Master Address Register 2 (IEMA2)

IEMA2 indicates the upper eight bits of the communications destination master unit address in slave/broadcast reception. This register is enabled when slave/broadcast reception starts, and the contents are changed at the time of setting the RXS flag in IERSR.

If a broadcast receive error interrupt is selected with the DEE bit in IECTR and the receive buffer is not in the receive enabled state at control field reception, a receive error interrupt is generated and the upper eight bits of the master address are stored in IEMA2. This register cannot be modified.

Bit:	7	6	5	4	3	2	1	0
	IMAU8							
Initial value:	0	0	0	0	0	0	0	0
R/W:	R	R	R	R	R	R	R	R

Bit	Bit Name	Initial Value	R/W	Description
7 to 0	IMAU8	All 0	R	Upper Eight Bits of IEBus Reception Master Address Indicates the upper eight bits of the communications destination master unit address in slave/broadcast reception. This register is enabled when slave/broadcast reception starts, and the contents are changed at the time of setting the RXS flag. If a broadcast receive error interrupt is selected by the DEE bit in IECTR and the receive buffer is not in the receive enabled state at control field reception, a receive error interrupt is generated and the upper eight bits of the master address are stored in IEMA2.

chanhvinh.com

24.3.11 IEBus Receive Control Field Register (IERCTL)

IERCTL indicates the control field value in slave/broadcast reception. This register is enabled when slave/broadcast receive starts, and the contents are changed at the time of setting the RXS flag in IERSR. This register cannot be modified.

Bit:	7	6	5	4	3	2	1	0
	-	-	-	-	RCTL			
Initial value:	0	0	0	0	0	0	0	0
R/W:	R	R	R	R	R	R	R	R

Bit	Bit Name	Initial Value	R/W	Description
7 to 4	—	All 0	R	Reserved These bits are always read as 0. The write value should always be 0.
3 to 0	RCTL	0000	R	IEBus Receive Control Field Indicates the control field value in slave/broadcast reception. This register is enabled when slave/broadcast reception starts, and the contents are changed at the time of setting the RXS flag.

chanhvinh.com

24.3.12 IEBus Receive Message Length Register (IERBFL)

IERBFL indicates the message length field in slave/broadcast reception. This register is enabled when slave/broadcast receive starts, and the contents are changed at the time of setting the RXS flag in IERSR.

This register cannot be modified.

Bit:	7	6	5	4	3	2	1	0
	RBFL							
Initial value:	0	0	0	0	0	0	0	0
R/W:	R	R	R	R	R	R	R	R

Bit	Bit Name	Initial Value	R/W	Description
7 to 0	RBFL	All 0	R	IEBus Receive Message Length Indicates the contents of the message length field in slave/broadcast reception.

24.3.13 IEBus Lock Address Register 1 (IELA1)

IELA1 specifies the lower eight bits of a locked address when a unit is locked.

Bit:	7	6	5	4	3	2	1	0
	ILAL8							
Initial value:	0	0	0	0	0	0	0	0
R/W:	R	R	R	R	R	R	R	R

Bit	Bit Name	Initial Value	R/W	Description
7 to 0	ILAL8	All 0	R	Lower Eight Bits of IEBus Lock Address Indicates the lower eight bits of the master unit address when a unit is locked. These bits are valid only when the LCK bit in IEFLG is set.

chanhvinh.com

24.3.14 IEBus Lock Address Register 2 (IELA2)

IELA2 specifies the upper four bits of a locked address when a unit is locked.



Bit:	7	6	5	4	3	2	1	0
	-	-	-	-	ILAU4			
Initial value:	0	0	0	0	0	0	0	0
R/W:	R	R	R	R	R	R	R	R

Bit	Bit Name	Initial Value	R/W	Description
7 to 4	—	All 0	R	Reserved These bits are always read as 0. The write value should always be 0.
3 to 0	ILAU4	0000	R	Upper Four Bits of IEBus Locked Address Stores the upper four bits of the master unit address when a unit is locked. These bits are valid only when the LCK bit in IEFLG is set

chanhvinh.com

24.3.15 IEBus General Flag Register (IEFLG)

IEFLG indicates the command execution status, lock status and slave address match, and broadcast reception detection.

Bit:	7	6	5	4	3	2	1	0
	CMX	MRQ	SRQ	SRE	LCK	-	RSS	GG
Initial value:	0	0	0	0	0	0	0	0
R/W:	R	R	R	R	R	R	R	R

Bit	Bit Name	Initial Value	R/W	Description
7	CMX	0	R	Command Execution Status Indicates the command execution status. 0: Command execution is completed 1: A command is being executed [Setting condition] • When a master communications request or slave transmit request command is issued while the MRQ, SRQ, or SRE flag is set [Clearing condition] • When a command execution has been completed
6	MRQ	0	R	Master Communications Request Indicates whether the unit is in the communications request state as a master unit. 0: The unit is not in the communications request state as a master unit 1: The unit is in the communications request state as a master unit [Setting condition] • When the CMX flag is cleared to 0 after the master communications request command is issued [Clearing condition] • When the master communications have been completed

chanhvinh.com

Bit	Bit Name	Initial Value	R/W	Description
5	SRQ	0	R	Slave Transmission Request Indicates whether the unit is in the transmit request state as a slave unit. 0: The unit is not in the transmit request state as a slave unit 1: The unit is in the transmit request state as a slave unit [Setting condition] • When the CMX flag is cleared to 0 after the slave transmit request command is issued. [Clearing condition] • When a slave transmission has been completed.
4	SRE	0	R	Slave Receive Status Indicates the execution status in slave/broadcast reception. 0: Slave/broadcast reception is not being executed 1: Slave/broadcast reception is being executed [Setting condition] • When the slave/broadcast reception is started while the RE bit in IECTR is set to 1. [Clearing condition] • When the slave/broadcast reception has been completed.

chanhvinh.com

Bit	Bit Name	Initial Value	R/W	Description
3	LCK	0	R	Lock Status Indication Set to 1 when a unit is locked by a lock request from the master unit. IELA1 and IELA2 values are valid only when this flag is set to 1. 0: A unit is unlocked 1: A unit is locked [Setting condition] • When data for the number of bytes specified by the message length is not received after the control bits that make the unit locked are received from the master unit. (The LCK flag is set to 1 only when the message length exceeds the maximum number of transfer bytes in one frame. This flag is not set by completion of other errors.) [Clearing condition] • When an unlock condition is satisfied or when an unlock command is issued.
2	—	0	R	Reserved This bit is always read as 0. The write value should always be 0.
1	RSS	0	R	Receive Broadcast Bit Status Indicates the received broadcast bit value. This flag is valid when the slave/broadcast reception is started. (This flag is changed at the time of setting the RXS flag.) The previous value remains unchanged until the next slave/broadcast reception is started. 0: Received broadcast bit is 0 1: Received broadcast bit is 1

chanhvinh.com

Bit	Bit Name	Initial Value	R/W	Description
0	GG	0	R	General Broadcast Reception Acknowledgement Set to 1 when the slave address is acknowledged as H'FFF in broadcast reception. Like the receive broadcast bit, this flag is valid when the slave/broadcast reception is started. (This flag is changed at the time of setting the RXS flag in IERSR.) The previous value remains unchanged until the next slave/broadcast reception is started. This flag is cleared to 0 in slave normal reception. 0: (1) A unit is in slave reception (2) When H'FFF is not acknowledged in the slave address field in broadcast reception 1: When H'FFF is acknowledged in the slave address field in broadcast reception

24.3.16 IEBus Transmit Status Register (IETSR)

IETSR detects events such as transmit start, transmit normal completion, and transmit error end. Each status flag in IETSR corresponds to a bit in the IEBus transmit interrupt enable register (IEIET) that enables or disables each interrupt. This register is cleared by writing 1 to each bit.

Bit:	7	6	5	4	3	2	1	0
	-	TXS	TXF	-	TXEAL	TXETTME	TXERO	TXEACK
Initial value:	0	0	0	0	0	0	0	0
R/W:	R	R/(W)*	R/(W)*	R	R/(W)*	R/(W)*	R/(W)*	R/(W)*

Bit	Bit Name	Initial Value	R/W	Description
7	—	0	R	Reserved This bit is always read as 0. The write value should always be 0.

chanhvinh.com

Bit	Bit Name	Initial Value	R/W	Description
6	TXS	0	R/(W)*	Transmit Start Indicates that this module starts transmission. [Setting condition] • During master transmission, the arbitration is won and the master address field transmission is completed [Clearing condition] • When 1 is written
5	TXF	0	R/(W)*	Transmit Normal Completion Indicates that data for the number of bytes specified by the message length bits has been transmitted with no error. [Setting condition] • When data for the number of bytes specified by the message length bits has been transmitted normally [Clearing condition] • When 1 is written
4	—	0	R	Reserved This bit is always read as 0. The write value should always be 0.
3	TXEAL	0	R/(W)*	Arbitration Loss This module retransmits from the start bit for the number of times specified by the RN bit in IEMCR if the arbitration has been lost in master communications. If the arbitration has been lost for the specified number of times, the TXEAL is set to enter the wait state. If the arbitration has been won within retransmit for the specified number of times, this flag is not set to 1. This flag is set only when the arbitration has been lost and the wait state is entered. [Setting condition] • When the arbitration has been lost during data transmission and the transmission has been terminated [Clearing condition] • When 1 is written

chanhvinh.com

Bit	Bit Name	Initial Value	R/W	Description
2	TXETTME	0	R/(W)*	Transmit Timing Error Set to 1 if data is not transmitted at the timing specified by the IEBus protocol during data transmission. This module sets this bit and enters the wait state. [Setting condition] • When a timing error occurs during data transmission [Clearing condition] • When 1 is written
1	TXERO	0	R/(W)*	Overflow of Maximum Number of Transmit Bytes in One Frame Indicates that the maximum number of bytes defined by the communications mode have been transmitted because a NAK has been received from the receive unit and retransmit has been performed, or that transmission has not been completed because the message length value exceeds the maximum number of transmit bytes in one frame. This module sets this bit and enters the wait state. [Setting condition] • When the transmit has not been completed although the maximum number of bytes defined by the communications mode have been transmitted [Clearing condition] • When 1 is written

chanhvinh.com

Bit	Bit Name	Initial Value	R/W	Description
0	TXEACK	0	R/(W)*	Acknowledge Bit Status Indicates the data received in the acknowledge bit of the data field. • Acknowledge bit other than in the data field This module terminates the transmission and enters the wait state if a NAK is received. In this case, this bit is set to 1. • Acknowledge bit in the data field This module retransmits data up to the maximum number of bytes defined by the communications mode until an ACK is received from the receive unit if a NAK is received from the receive unit during data field transmission. In this case, when an ACK is received from the receive unit during retransmission, this flag is not set and transmission will be continued. When transmission is terminated without receiving an ACK, this flag is set to 1. Note: This flag is invalid in broadcast communications. [Setting condition] • When the acknowledge bit of 1 (NAK) is detected [Clearing condition] • When 1 is written

Note: * Only 1 can be written to clear the flag.

chanhvinh.com

24.3.17 IEBus Transmit Interrupt Enable Register (IEIET)

IEIET enables/disables interrupts for sources such as transmit start, transmit normal completion, and transmit error completion in IETSR.

Bit:	7	6	5	4	3	2	1	0
	-	TXSE	TXFE	-	TXEALE	TXE TTMEE	TXEROE	TXE ACKE
Initial value:	0	0	0	0	0	0	0	0
R/W:	R	R/W	R/W	R	R/W	R/W	R/W	R/W

Bit	Bit Name	Initial Value	R/W	Description
7	—	0	R	Reserved This bit is always read as 0. The write value should always be 0.
6	TXSE	0	R/W	Transmit Start Interrupt Enable Enables/disables a transmit start (TXS) interrupt. 0: Disables a transmit start (TXS) interrupt 1: Enables a transmit start (TXS) interrupt
5	TXFE	0	R/W	Transmit Normal Completion Interrupt Enable Enables/disables a transmit normal completion (TXF) interrupt. 0: Disables a transmit normal completion (TXF) interrupt 1: Enables a transmit normal completion (TXF) interrupt
4	—	0	R	Reserved This bit is always read as 0. The write value should always be 0.
3	TXEALE	0	R/W	Arbitration Loss Interrupt Enable Enables/disables an arbitration loss (TXEAL) interrupt. 0: Disables an arbitration loss (TXEAL) interrupt 1: Enables an arbitration loss (TXEAL) interrupt

chanhvinh.com

Bit	Bit Name	Initial Value	R/W	Description
2	TXETTMEE	0	R/W	Transmit Timing Error Interrupt Enable Enables/disables a transmit timing error (TXETTMEE) interrupt. 0: Disables a transmit timing error (TXETTMEE) interrupt 1: Enables a transmit timing error (TXETTMEE) interrupt
1	TXEROE	0	R/W	Overflow of Maximum Number of Transmit Bytes in One Frame Interrupt Enable Enables/disables an overflow of the maximum number of transmit bytes in one frame (TXEROE) interrupt. 0: Disables an overflow of the maximum number of transmit bytes in one frame (TXEROE) interrupt 1: Enables an overflow of the maximum number of transmit bytes in one frame (TXEROE) interrupt
0	TXEACKE	0	R/W	Acknowledge Bit Interrupt Enable Enables/disables an acknowledge bit (TXEACKE) interrupt. 0: Disables an acknowledge bit (TXEACKE) interrupt 1: Enables an acknowledge bit (TXEACKE) interrupt

chanhvinh.com

24.3.18 IEBus Receive Status Register (IERSR)

IERSR detects receive busy, receive start, receive normal completion, or receive completion with an error. Each status flag in IERSR corresponds to a bit in the IEIER that enables/disables each interrupt. This register is cleared by writing 1 to each bit.

Bit:	7	6	5	4	3	2	1	0
	RXBSY	RXS	RXF	RXEDE	RXEOVE	RXE RTME	RXEDLE	RXEPE
Initial value:	0	0	0	0	0	0	0	0
R/W:	R/(W)*	R/(W)*	R/(W)*	R/(W)*	R/(W)*	R/(W)*	R/(W)*	R/(W)*

Bit	Bit Name	Initial Value	R/W	Description
7	RXBSY	0	R/(W)*	Receive Busy Indicates that the receive data is stored in the receive data buffer (IERB001 to IERB128). Clear this bit after reading out all data. The next receive data cannot be received while this bit is set. [Setting condition] • When all receive data has been written to the receive data buffer. [Clearing condition] • When 1 is written
6	RXS	0	R/(W)*	Receive Start Detection Indicates that this module starts reception. [Setting condition] • When the data from the master unit to message length field has been received correctly in slave reception [Clearing condition] • When 1 is written

chanhvinh.com

Bit	Bit Name	Initial Value	R/W	Description
5	RXF	0	R/(W)*	Receive Normal Completion Indicates that data for the number of bytes specified by the message length bits has been received normally. [Setting condition] • When data for the number of bytes specified by the message length bits has been received normally. [Clearing condition] • When 1 is written
4	RXEDE	0	R/(W)*	Broadcast Receive Error Indicates that data could not be received because the receive buffer is not in the receive enabled state (when the RE bit is not set to 1 or the RXBSY flag is set.) during receiving control field broadcast reception. This bit functions when the DEE bit in IECTR is set to 1. [Setting condition] • When data could not be received during broadcast reception. [Clearing condition] • When 1 is written
3	RXEOVE	0	R/(W)*	Receive Overrun Flag Used to indicate the overrun during data reception. This module sets this flag when this module receives the next byte data while the receive data has not been read (the RXBSY flag is not cleared). If this case, this module assumes that an overrun error has occurred and returns a NAK to the communications destination unit. The communications destination unit retransmits data up to the maximum number of transmit bytes. This module, however, returns a NAK when the RXBSY flag remains set. If the RXBSY flag is cleared to 0, this module returns an ACK, and receives the next data. In broadcast reception, if the RXBSY flag is set during data receive start, this module immediately enters the wait state. This flag becomes enabled only after the receive start flag (RXS) is set. [Setting condition] • When the next byte data is received while the RXBSY flag is not cleared. [Clearing condition] • When 1 is written

chanhvinh.com

Bit	Bit Name	Initial Value	R/W	Description
2	RXERTME	0	R/(W)*	Receive Timing Error Set to 1 if data is not received at the time specified by the IEBus protocol during data reception. This module sets this bit and enters the wait state. This flag is enabled only after the receive start flag (RXS) is set. If this error occurs before the receive start flag (RXS) is set, this module stops communication and enters the wait state. This bit is not set in this case. [Setting condition] • When a timing error occurs during data reception [Clearing condition] • When 1 is written
1	RXEDLE	0	R/(W)*	Overflow of Maximum Number of Receive Bytes in One Frame Indicates that the data reception has not finished within the maximum number of bytes defined by the communications mode because of a parity error or overrun error causing the retransfer of data, or that reception has not been completed because the message length value exceeds the maximum number of receive bytes in one frame. This module sets the RXEDLE flag and enters the wait state. This flag is enabled only after the receive start flag (RXS) is set. If this error occurs before the receive start flag is set, this module stops communication and enters the wait state. This bit is not set in this case. [Setting condition] • When the reception has not been completed within the maximum number of bytes defined by communications mode. [Clearing condition] • When 1 is written

chanhvinh.com

Bit	Bit Name	Initial Value	R/W	Description
0	RXEPE	0	R/(W)*	Parity Error Indicates that a parity error has occurred during data field reception. If a parity error occurs before data field reception, this module immediately enters the wait state and the RXEPE flag is not set. If a parity error occurs when the maximum number of receive bytes in one frame have not been received, the RXEPE flag is not set yet. When a parity error occurs, this module returns a NAK to the communications destination unit via the acknowledge bit. In this case, the communications destination unit continues retransfer up to the maximum number of receive bytes in one frame and if the reception has been completed normally by clearing the parity error, the RXEPE flag is not set. If the parity error is not cleared when the reception is terminated before receiving data for the number of bytes specified by the message length, the RXEPE flag is set. In broadcast reception, if a parity error occurs during data field reception, this module enters the wait state immediately after setting the RXEPE flag. This flag is enabled only after the receive start flag (RXS) is set. If this error occurs before the receive start flag is set, this module stops communication and enters the wait state. This bit is not set in this case. [Setting condition] • When the parity bit of the last data of the data field is not correct after the maximum number of receive bytes have been received [Clearing condition] • When 1 is written

Note: * Only 1 can be written to clear the flag.

chanhvinh.com

24.3.19 IEBus Receive Interrupt Enable Register (IEIER)

IEIER enables/disables interrupts for sources such as IERSR receive busy, receive start, receive normal completion, and receive error completion.

Bit:	7	6	5	4	3	2	1	0
	RXBSYE	RXSE	RXFE	RXEDEE	RXE OVEE	RXE RTMEE	RXE DLEE	RXEPEE
Initial value:	0	0	0	0	0	0	0	0
R/W:	R/W	R/W	R/W	R/W	R/W	R/W	R/W	R/W

Bit	Bit Name	Initial Value	R/W	Description
7	RXBSYE	0	R/W	Receive Busy Interrupt Enable Enables/disables a receive busy interrupt (RXBSY) 0: Disables a receive busy (RXBSY) interrupt 1: Enables a receive busy (RXBSY) interrupt
6	RXSE	0	R/W	Receive Start Interrupt Enable Enables/disables a receive start (RXS) interrupt 0: Disables a receive start (RXS) interrupt 1: Enables a receive start (RXS) interrupt
5	RXFE	0	R/W	Receive Normal Completion Enable Enables/disables a receive normal completion (RXF) interrupt 0: Disables a receive normal completion (RXF) interrupt 1: Enables a receive normal completion (RXF) interrupt
4	RXEDEE	0	R/W	Broadcast Receive Error Interrupt Enable Enables/disables a broadcast receive error (RXEDE) interrupt 0: Disables a broadcast receive error (RXEDE) interrupt 1: Enables a broadcast receive error (RXEDE) interrupt

chanhvinh.com

Bit	Bit Name	Initial Value	R/W	Description
3	RXEOVEE	0	R/W	Overrun Control Flag Interrupt Enable Enables/disables an overrun control flag (RXEOVE) interrupt 0: Disables an overrun control flag (RXEOVE) interrupt 1: Enables an overrun control flag (RXEOVE) interrupt
2	RXERTMEE	0	R/W	Receive Timing Error Interrupt Enable Enables/disables a receive timing error (RXERTME) interrupt. 0: Disables a receive timing error (RXERTME) interrupt 1: Enables a receive timing error (RXERTME) interrupt
1	RXEDLEE	0	R/W	Overflow of Maximum Number of Receive Bytes in One Frame Interrupt Enable Enables/disables an overflow of the maximum number of receive bytes in one frame (RXEDLE) interrupt 0: Disables an overflow of the maximum number of receive bytes in one frame (RXEDLE) interrupt 1: Enables an overflow of the maximum number of receive bytes in one frame (RXEDLE) interrupt
0	RXEPEE	0	R/W	Parity Error Interrupt Enable Enables/disables a parity error (RXEPE) interrupt 0: Disables a parity error (RXEPE) interrupt 1: Enables a parity error (RXEPE) interrupt

24.3.20 IEBus Clock Selection Register (IECKSR)

IECKSR is a readable/writable 8-bit register that specifies the clock used in this module.

Bit:	7	6	5	4	3	2	1	0
	-	-	-	CKS3	-	CKS[2:0]		
Initial value:	0	0	0	0	0	0	0	1
R/W:	R	R	R	R/W	R	R/W	R/W	R/W

chanhvinh.com

Bit	Bit Name	Initial Value	R/W	Description
7 to 5	—	All 0	R	Reserved These bits are always read as 0. The write value should always be 0.
4	CKS3	0	R/W	Input Clock Selection 3*1*2 Specifies the clock for this module 0: Peripheral clock 0 (P0φ) 1: AUDIO_X1, AUDIO_X2
3	—	0	R	Reserved This bit is always read as 0. The write value should always be 0.
2 to 0	CKS[2:0]	001	R/W	Input Clock Selection 2 to 0*1 Specifies the division ratio of the clock for this module 000: Setting prohibited 001: This module uses the 1/2 divided clock of IEBφ specified by CKS3 (IEBφ = 12 MHz, 12.58 MHz). 010: This module uses the 1/3 divided clock of IEBφ specified by CKS3 (IEBφ = 18 MHz, 18.87 MHz). 011: This module uses the 1/4 divided clock of IEBφ specified by CKS3 (IEBφ = 24 MHz, 25.16 MHz). 100: This module uses the 1/5 divided clock of IEBφ specified by CKS3 (IEBφ = 30 MHz, 31.45 MHz). 101: This module uses the 1/6 divided clock of IEBφ specified by CKS3 (IEBφ = 36 MHz, 37.74 MHz). 110: This module uses the 1/7 divided clock of IEBφ specified by CKS3 (IEBφ = 42 MHz, 44.03 MHz). 111: This module uses the 1/8 divided clock of IEBφ specified by CKS3 (IEBφ = 48 MHz).

Notes: 1. Do not change the setting of CKS3 and CKS[2:0] while IEBus is in transmit/receive operation.
2. When the CKS3 bit is set to 1, be sure to set the MSTP36 bit in STBCR3 to 0. For the setting of STBCR3, see section 49, Power-Down Modes.

chanhvinh.com

24.3.21 IEBus Transmit Data Buffer 001 to 128 (IETB001 to IETB128)

IETB001 to IETB128 are 128-byte (8 × 128) buffers to which data to be transmitted during master transmission is written.

The initial values in IETB001 to IETB128 are undefined.

Bit:	7	6	5	4	3	2	1	0
	TBn							
Initial value:	-	-	-	-	-	-	-	-
R/W:	W*	W*	W*	W*	W*	W*	W*	W*

[Legend]
n = 001 to 128

Bit	Bit Name	Initial Value	R/W	Description
7 to 0	TBn	Undefined	W*	IEBus Transmit Data Buffer Data to be transmitted in the data field during master transmission is written to TB001 to TB128. Data is written starting with TB001 for the start 1-byte data, followed by TB002 and TB003 and so on according to the transmission order, and TB128 stores the last data.

Note: * Writing to these bits during master transmission (MRQ in IEFLG is 1) is prohibited

chanhvinh.com

24.3.22 IEBus Receive Data Buffer 001 to 128 (IERB001 to IERB128)

IERB001 to IERB128 are 128-byte (8 × 128) buffers to which data to be transmitted during slave transmission is written.

The initial values in IERB001 to IERB128 are undefined.

Bit:	7	6	5	4	3	2	1	0
	RBn							
Initial value:	-	-	-	-	-	-	-	-
R/W:	R*	R*	R*	R*	R*	R*	R*	R*

[Legend]
n = 001 to 128

Bit	Bit Name	Initial Value	R/W	Description
7 to 0	RBn	Undefined	R*	IEBus Receive Data Buffer Data in RB001 to RB128 can be read when the RXBSY bit in the IEBus receive status register (IERSR) is set to 1. Data read from RB001 to RB128 is the field data during slave receive. Receive data is written starting with RB001 for the start 1-byte data, followed by RB002 and RB003 and so on, and RB128 stores the last data.

Note: * Reading these bits during slave reception (SRE in IEFLG is 1 and RXBSY in IERSR is 0) is prohibited. (Read value is undefined.)

chanhvinh.com

24.4 Data Format

24.4.1 Transmission Format

Figure 24.6 shows the relationship between the transfer format and each register during the IEBus data transmission.

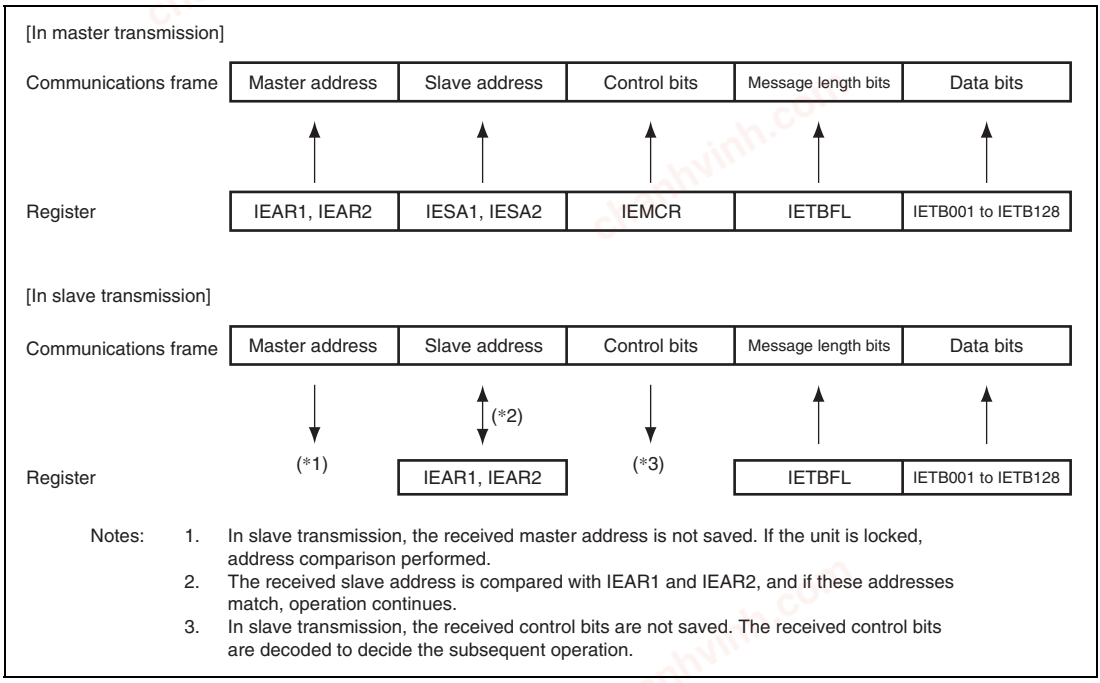

Notes:
1. In slave transmission, the received master address is not saved. If the unit is locked, address comparison performed.
2. The received slave address is compared with IEAR1 and IEAR2, and if these addresses match, operation continues.
3. In slave transmission, the received control bits are not saved. The received control bits are decoded to decide the subsequent operation.

Figure 24.6 Relationship between Transfer Format and Each Register during IEBus Data Transmission

chanhvinh.com

24.4.2 Reception Format

Figure 24.7 shows the relationship between the transfer format and each register during the IEBus data reception.

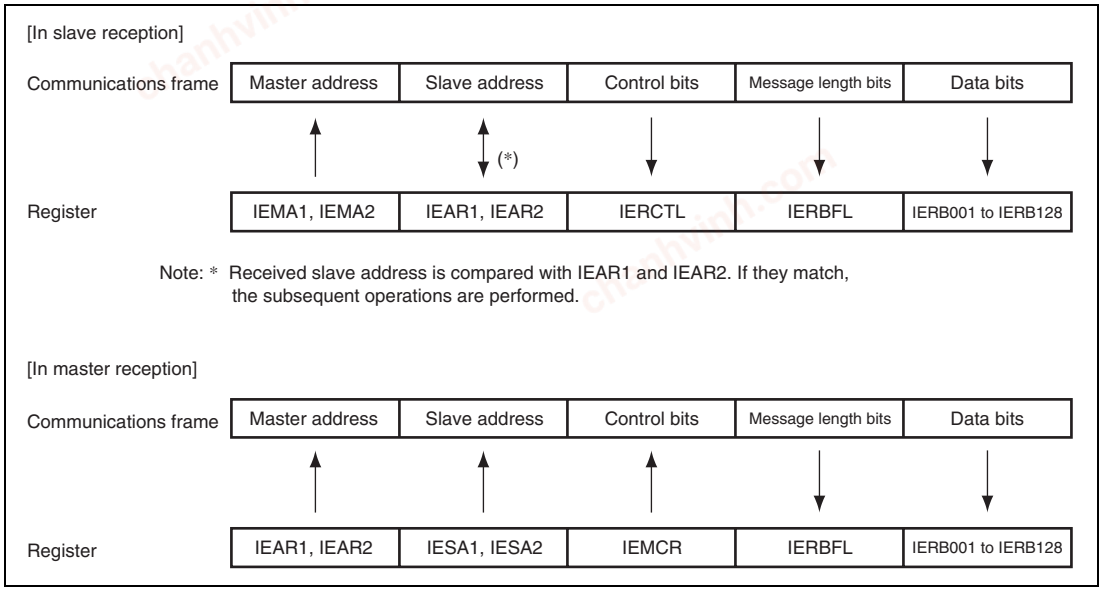

Figure 24.7 Relationship between Transfer Format and Each Register during IEBus Data Reception

chanhvinh.com

24.5 Software Control Flows

24.5.1 Initial Setting

Figure 24.8 shows the flowchart for the initial setting.

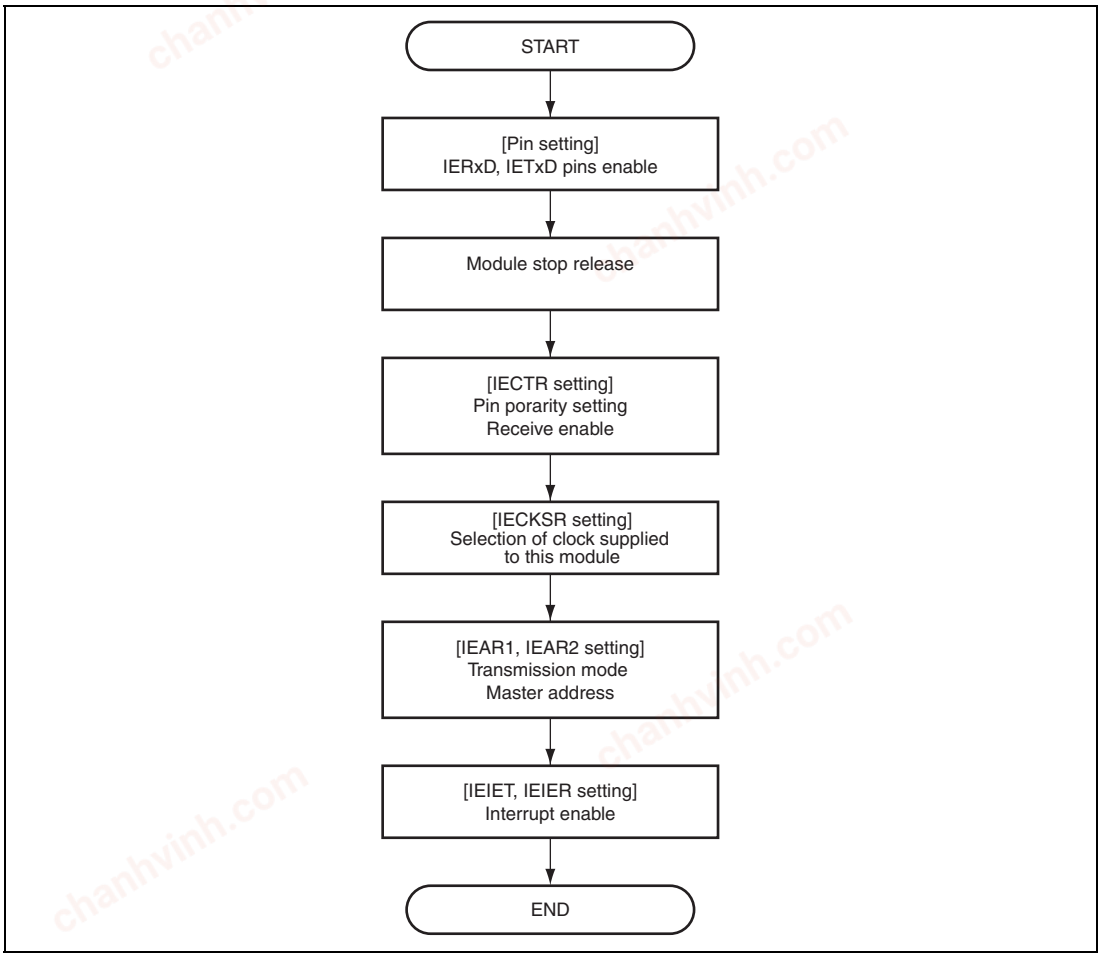

Figure 24.8 Flowchart for Initial Setting

chanhvinh.com

24.5.2 Master Transmission

Figure 24.9 shows the flowchart for master transmission.

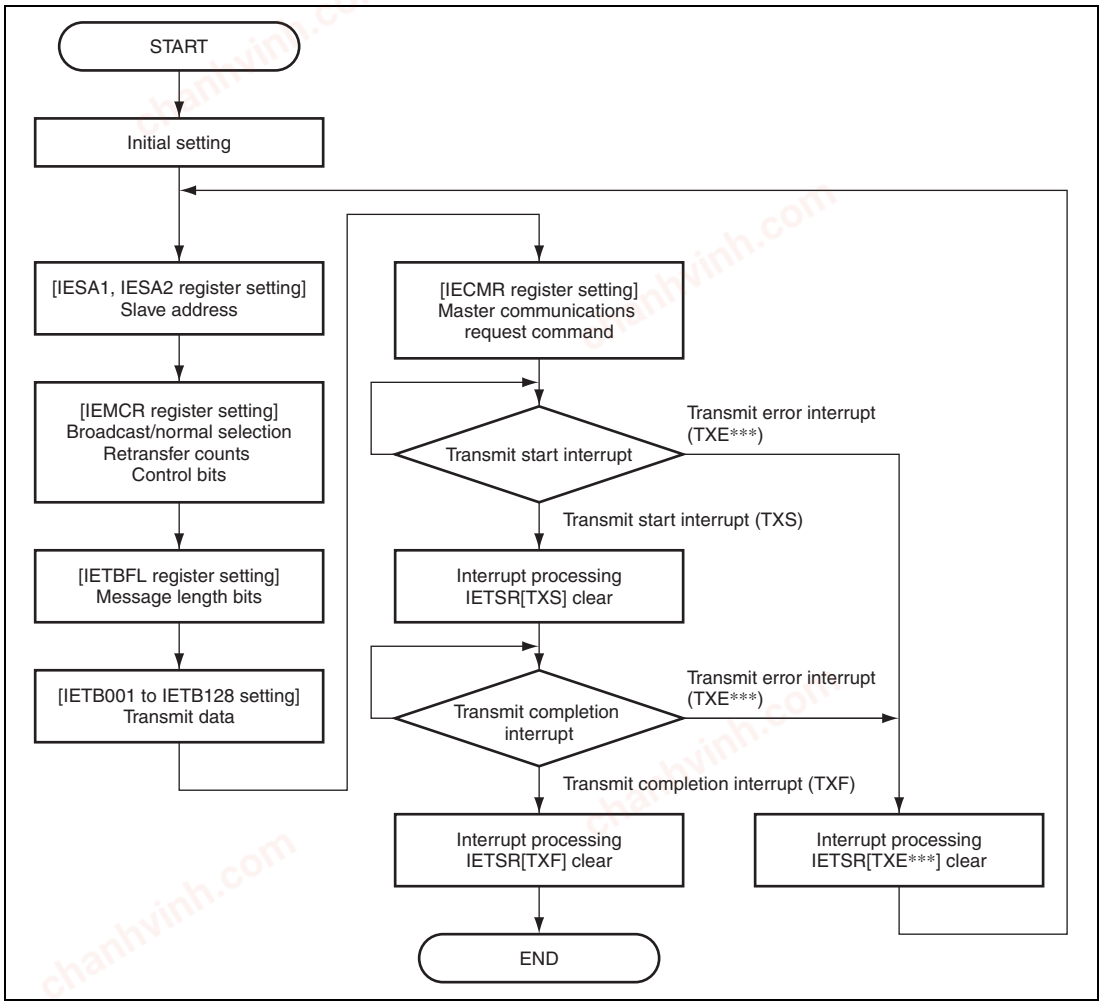

Figure 24.9 Flowchart for Master Transmission

chanhvinh.com

24.5.3 Slave Reception

Figure 24.10 shows the flowchart for slave reception.

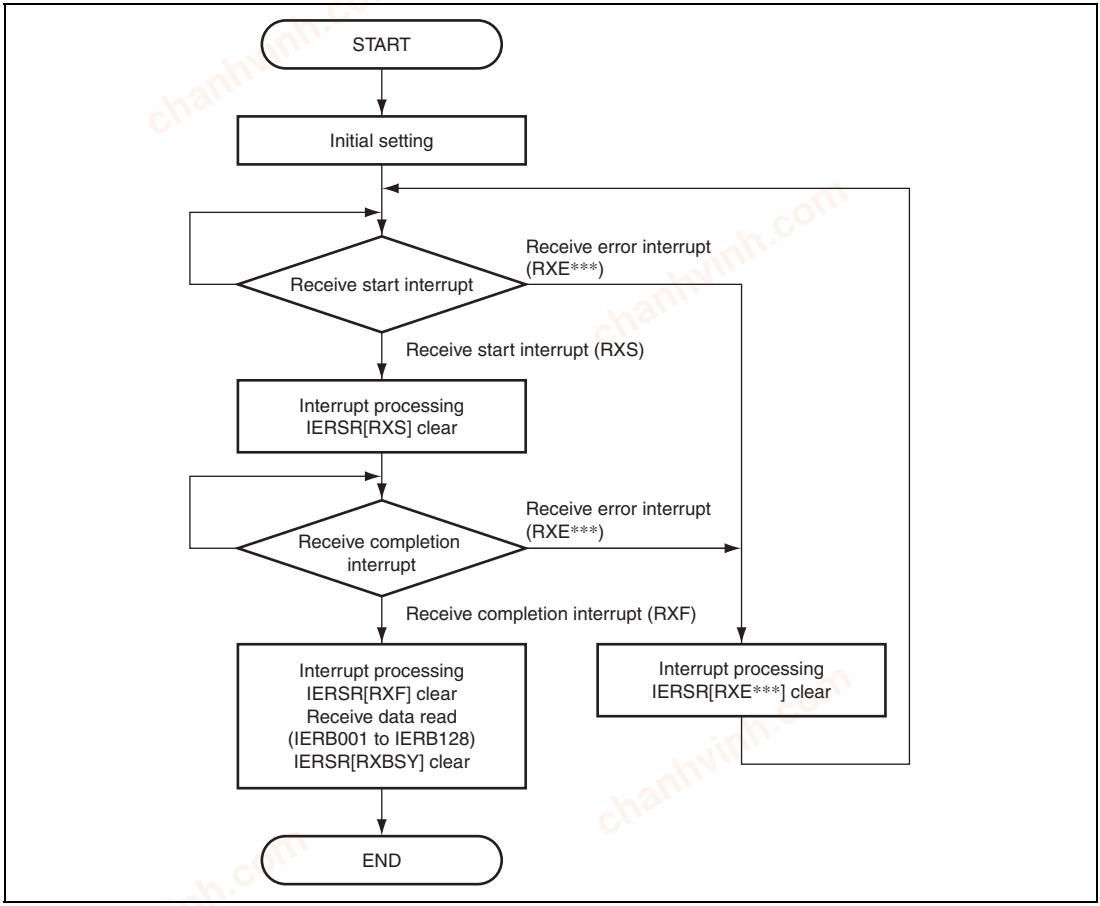

Figure 24.10 Flowchart for Slave Reception

chanhvinh.com

24.5.4 Master Reception

Figure 24.11 shows the flowchart for master reception.

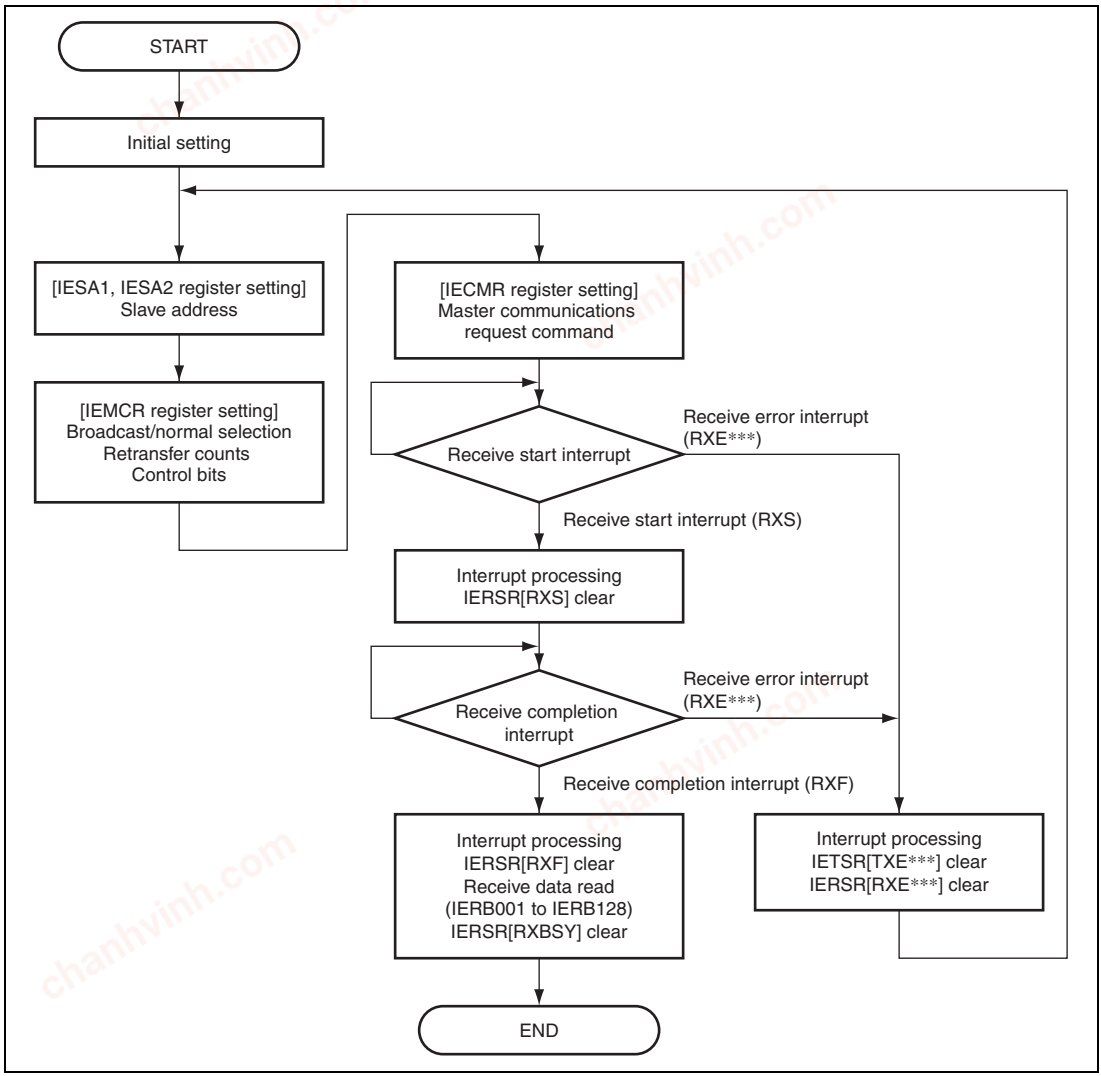

Figure 24.11 Flowchart for Master Reception

chanhvinh.com

24.5.5 Slave Transmission

Figure 24.12 shows the flowchart for slave transmission.

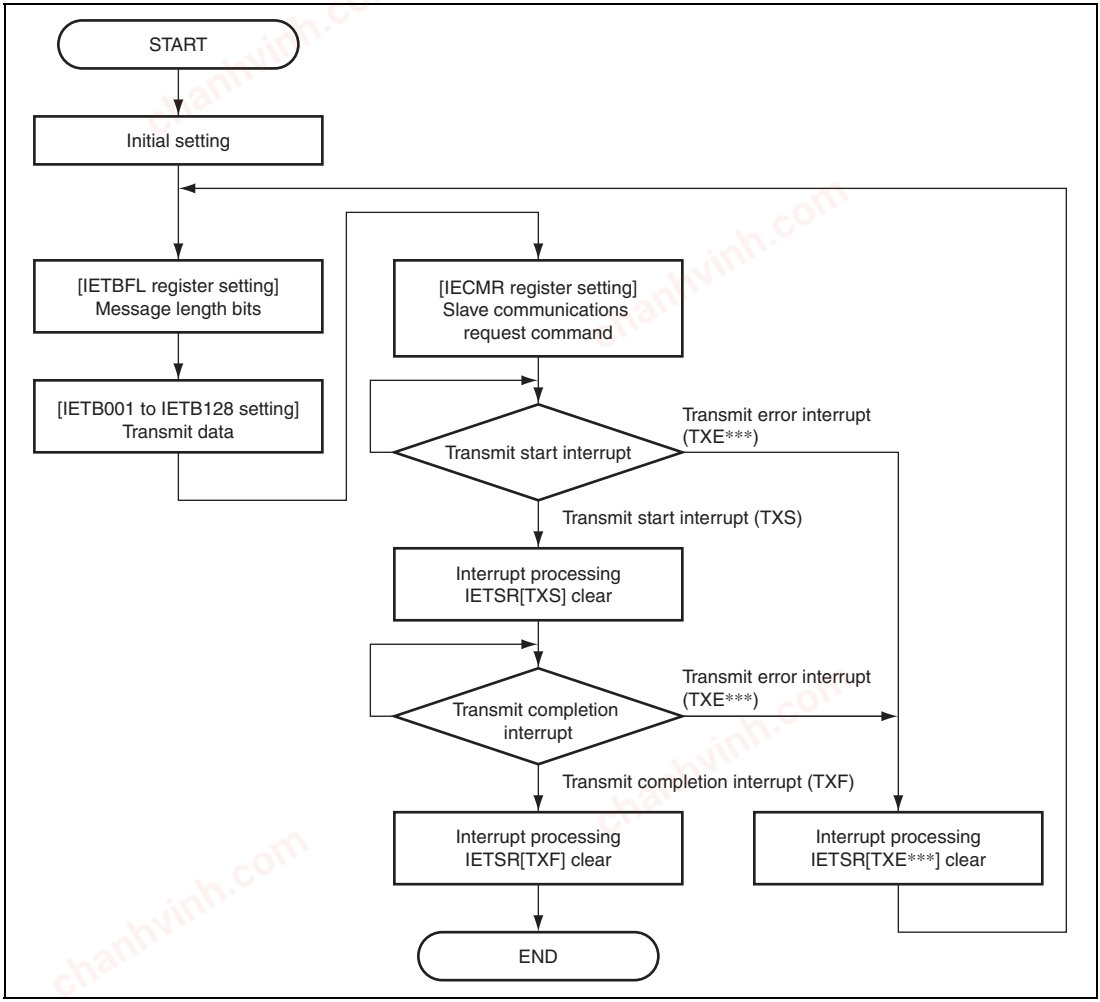

Figure 24.12 Flowchart for Slave Transmission

chanhvinh.com

24.6 Operation Timing

24.6.1 Master Transmit Operation

Figure 24.13 shows the timing for master transmit operation.

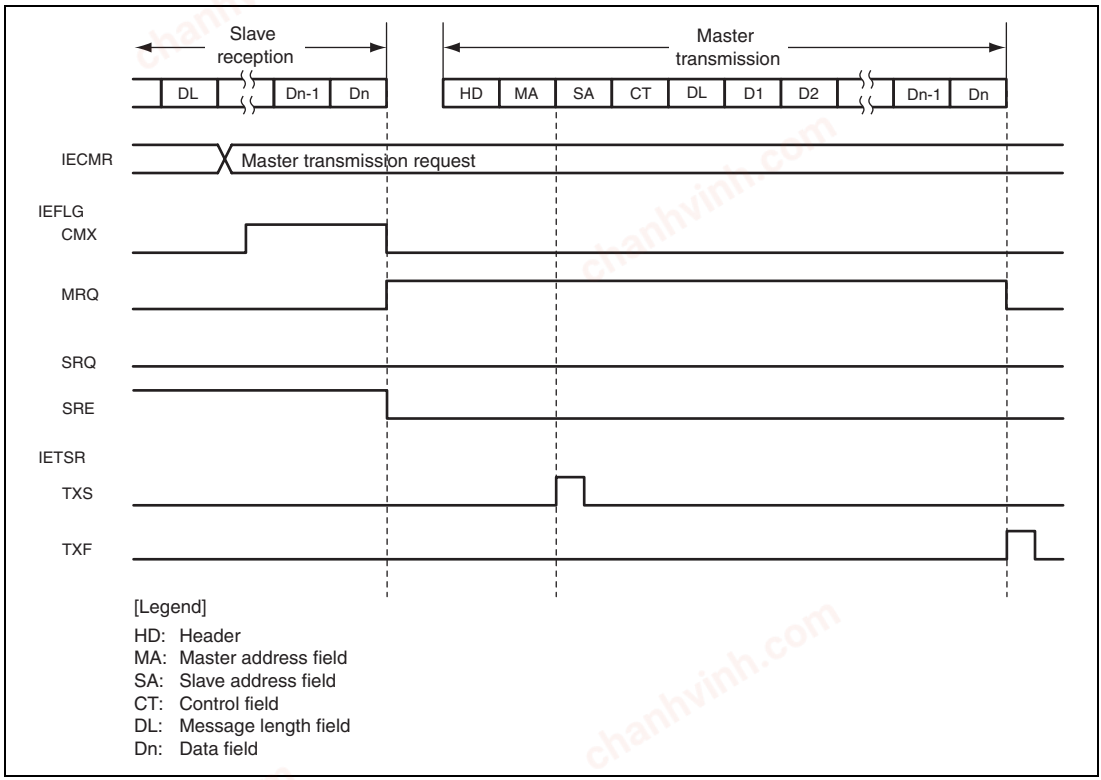

Figure 24.13 Master Transmit Operation Timing

chanhvinh.com

24.6.2 Slave Receive Operation

Figure 24.14 shows the timing for slave receive operation.

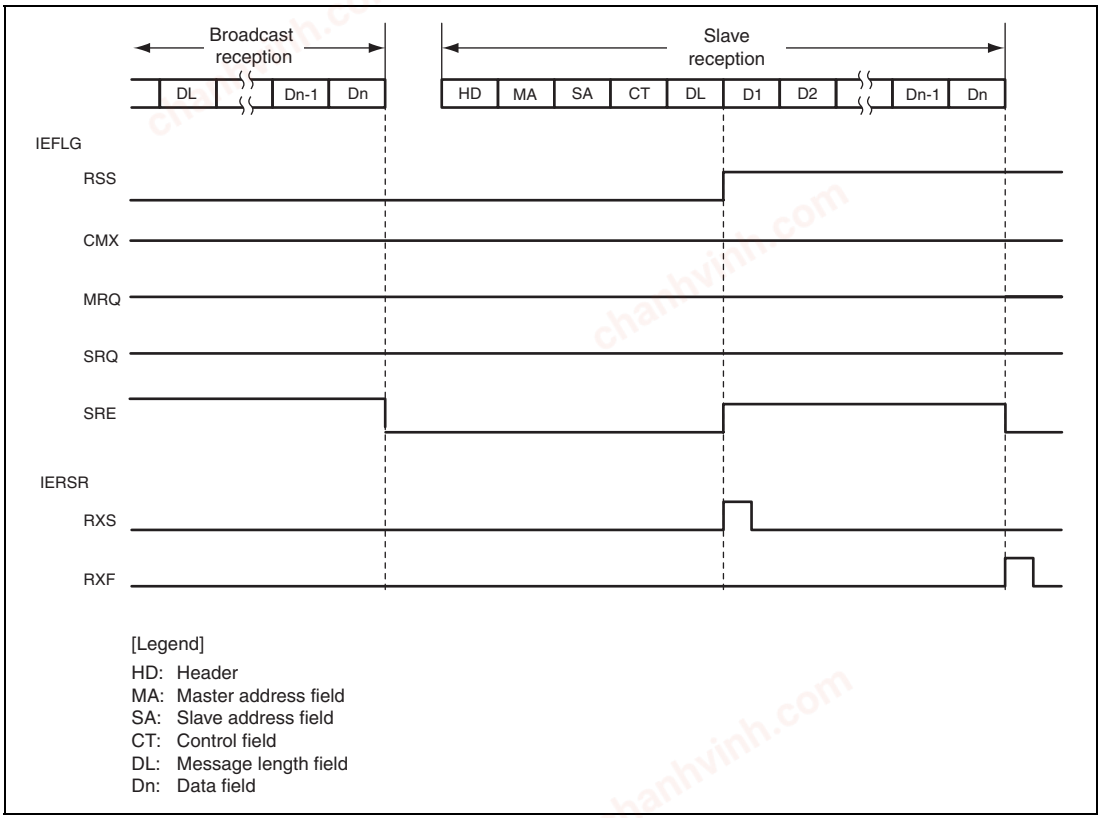

Figure 24.14 Slave Receive Operation Timing

chanhvinh.com

24.6.3 Master Receive Operation

Figure 24.15 shows the timing for master receive operation.

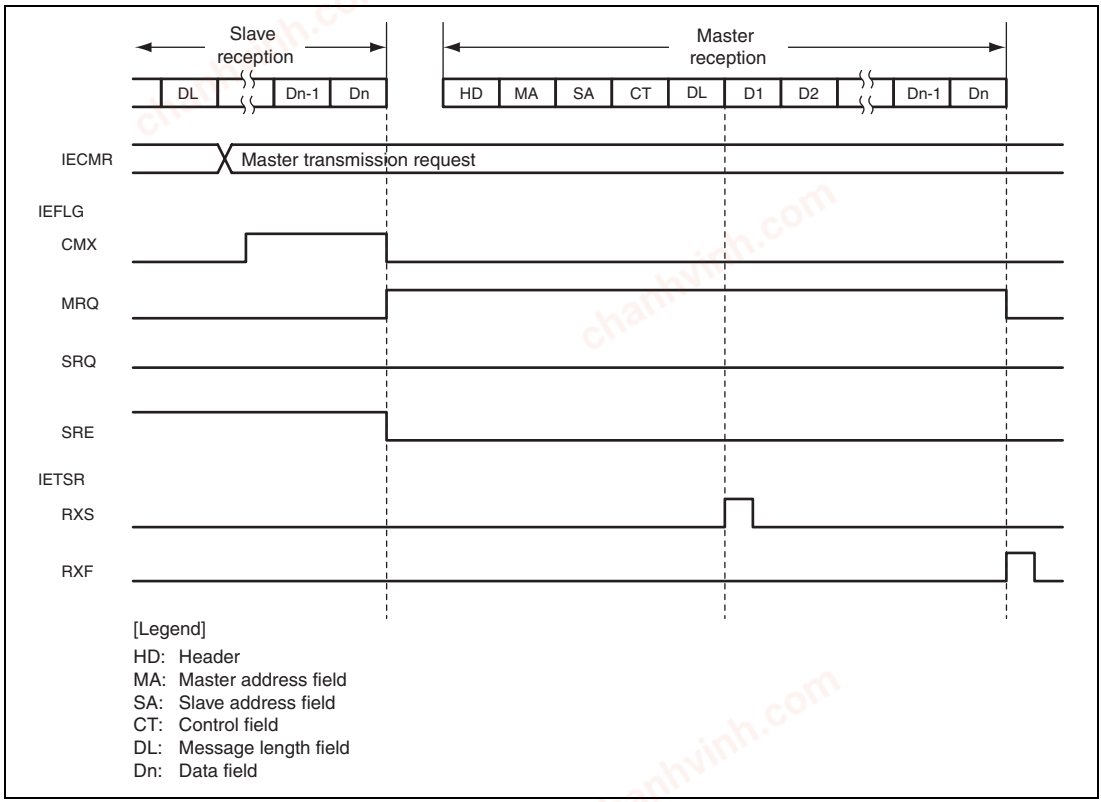

Figure 24.15 Master Receive Operation Timing

chanhvinh.com

24.6.4 Slave Transmit Operation

Figure 24.16 shows the timing for slave transmit operation.

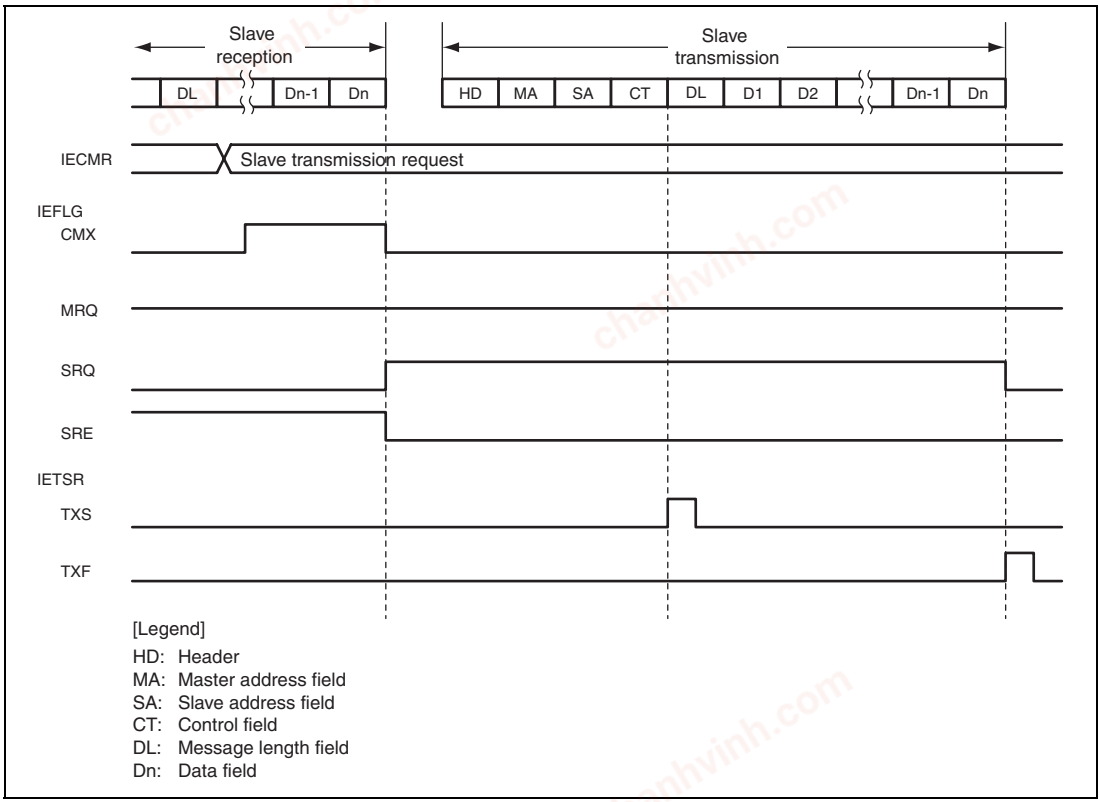

Figure 24.16 Slave Transmit Operation Timing

chanhvinh.com

24.7 Interrupt Sources

Interrupt sources for this module include the following:

- Transmit start (TXS)
- Transmit normal completion (TXF)
- Arbitration loss (TXEAL)
- Transmit timing error (TXETTME)
- Overflow of the maximum number of transmit bytes in one frame (TXERO)
- Acknowledge bits (TXEACK)
- Receive busy (RXBSY)
- Receive start (RXS)
- Receive normal completion (RXF)
- Broadcast Receive Error (RXEDE)
- Receive overrun flag (RXEOVE)
- Receive timing error (RXERTME)
- Overflow of the maximum number of receive bytes in one frame (RXEDLE)
- Parity error (RXEPE)

Each source has bits corresponding to the IEBus transmit interrupt enable register (IEIET) and the IEBus receive interrupt enable register (IEIER) and can enable/disable interrupts. Each source also has status flags corresponding to the IEBus transmit status register (IETSR) and IEBus receive status register (IERSR). Reading the status flags allows determination of the interrupt sources.

chanhvinh.com

Figure 24.17 shows the relations between the interrupt sources.

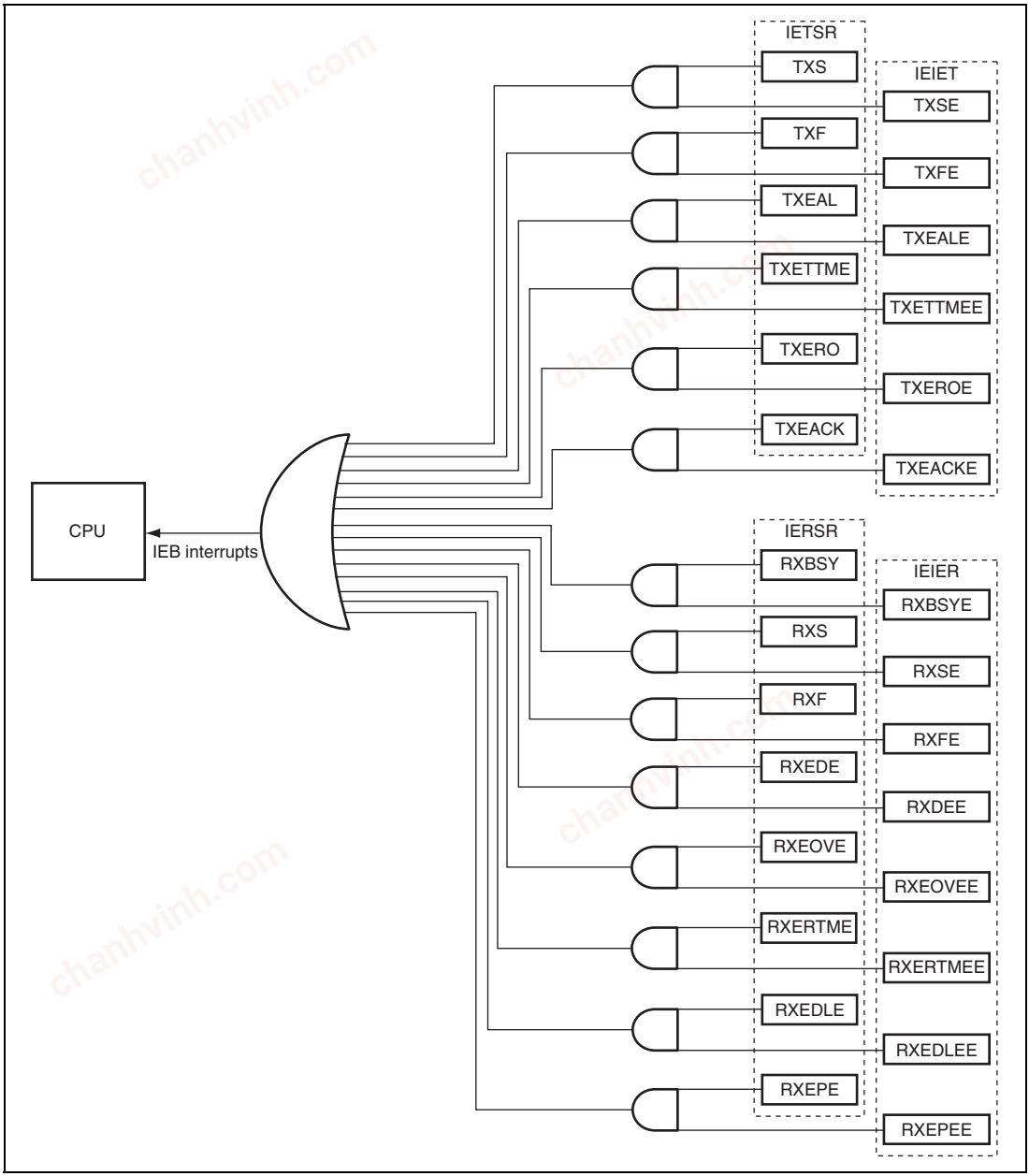

Figure 24.17 Relations between Interrupt Sources

chanhvinh.com

24.8 Usage Notes

24.8.1 Note on Operation when Transfer is Incomplete after Transfer of the Maximum Number of Bytes

(1) Data Transmission

When the maximum number of bytes defined by the communications mode have been transmitted because a NAK has been received from the receive unit or transmission has not been completed because the message length value exceeds the maximum number of transfer bytes in one frame, this module sets the error flag and enters a wait state. At this time, transfer proceeds until the (n + 1)th byte has been transmitted, where n is the maximum number of transfer bytes. Then, when NAK is received via the acknowledge bit of the (n + 1)th byte, the TXERO flag is set. If ACK is received rather than NAK, the TXF flag is set.

Figure 24.18 shows the timing of operations when the maximum number of transfer bytes is reached but transmission has not been completed.

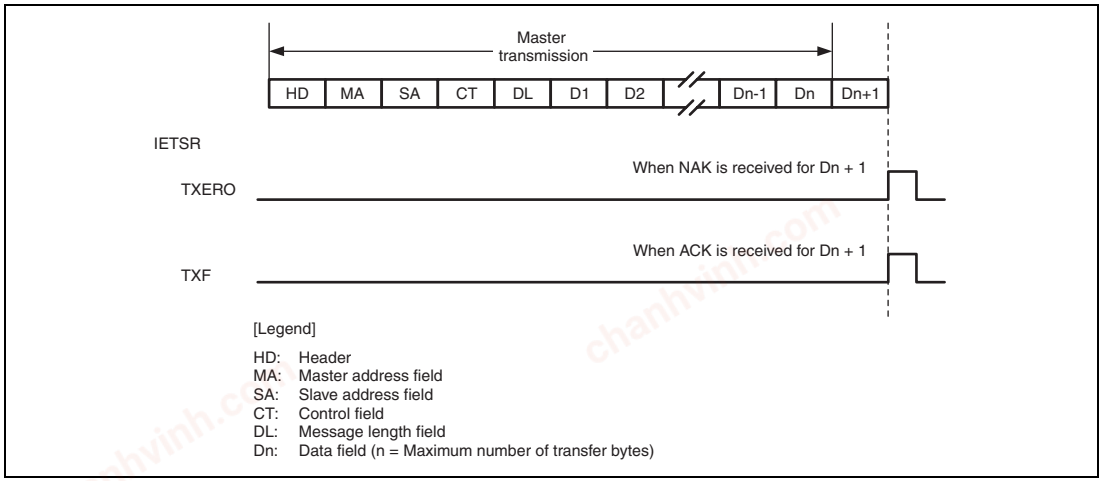

Figure 24.18 Timing of Operations when Transmission Has Not Been Completed Within the Maximum Number of Transfer Bytes

chanhvinh.com

(2) Data Reception

When the data reception has not finished within the maximum number of bytes defined by the communications mode because of a parity error or overrun error causing the retransfer of data, or reception has not been completed because the message length value exceeds the maximum number of transfer bytes in one frame, this module sets the error flag and enters a state of waiting for the (n + 1)th byte of data, where n is the maximum number of transfer bytes. Thus, when data of the (n + 1)th byte cannot be received, the receive timing error is detected and the RXERTME flag is set. At this time, the RXEDLE flag is not set. The RXEDLE flag is set when the (n + 1)th byte is received.

In the same way, when the maximum number of transfer bytes has been received and a parity error has not been cleared, and the (n + 1)th byte cannot be received, the RXERTME flag is set. At this time, the RXEPE flag is not set. The RXEPE flag is set when the (n + 1)th byte is received.

Figure 24.19 shows the timing of operations when the maximum number of transfer bytes has been reached but reception is not complete.

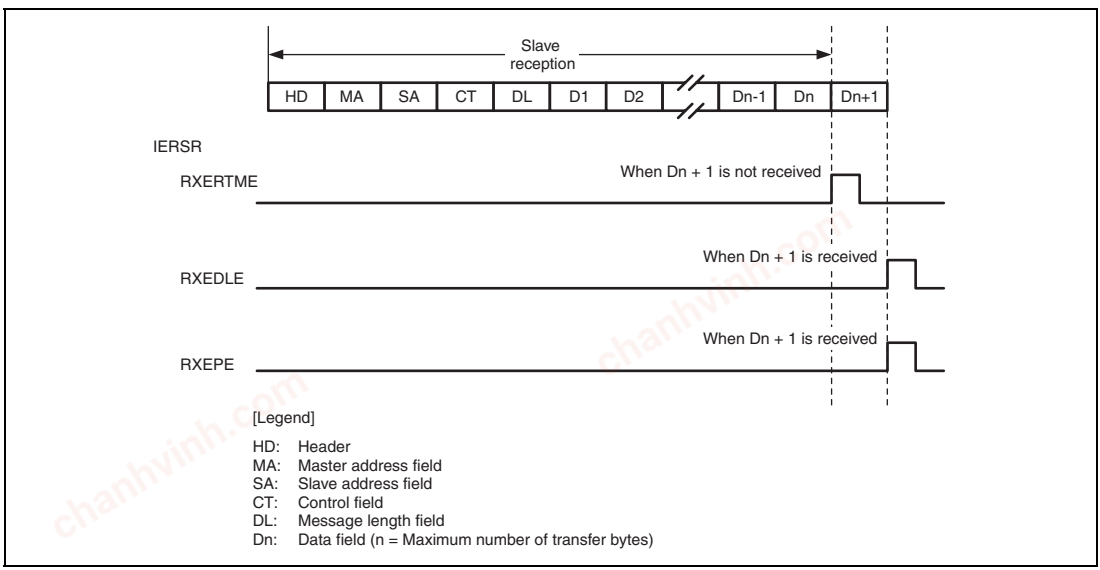

Figure 24.19 Timing of Operations when Reception Has Not Been Completed Within the Maximum Number of Transfer Bytes

chanhvinh.com

Section 25 Renesas SPDIF Interface

25.1 Overview

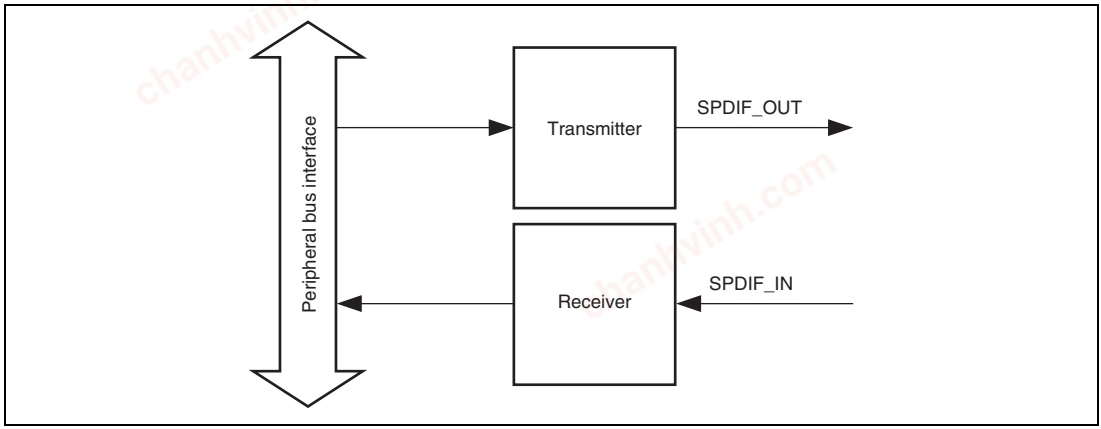

Figure 25.1 Overview Block Diagram

25.2 Features

- Supports the IEC 60958 standard (stereo and consumer use modes only).
- Supports sampling frequencies of 32 kHz, 44.1 kHz, and 48 kHz.
- Supports audio word sizes of 16 to 24 bits per sample.
- Biphase mark encoding.
- Double buffered data.
- Parity encoded serial data.
- Simultaneous transmit and receive
- Receiver autodetects IEC 61937 compressed mode data

chanhvinh.com

25.3 Functional Block Diagram

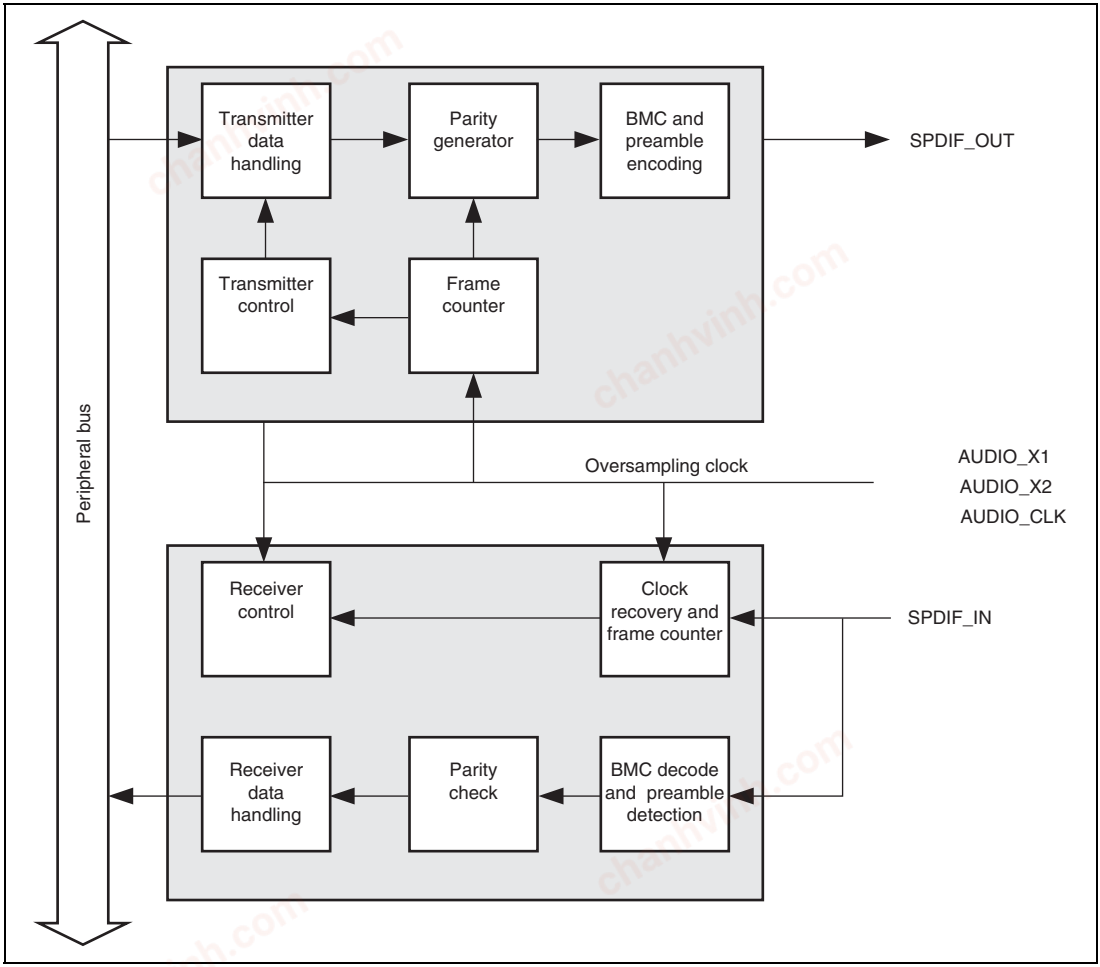

Figure 25.2 Functional Block Diagram

chanhvinh.com

25.4 Input/Output Pins

Table 25.1 shows the pin configuration.

Table 25.1 Pin Configuration

Channel	Pin Name	I/O	Description
0	SPDIF_IN	Input	Transmitter biphase-mark encoded SPDIF bitstream
1	SPDIF_OUT	Output	Receiver biphase-mark encoded SPDIF bitstream
0, 1 (Common)	AUDIO_CLK	Input	External clock for audio
	AUDIO_X1	Input	Crystal resonator/external clock for audio
	AUDIO_X2	Output	

25.5 Renesas SPDIF (IEC60958) Frame Format

The Renesas SPDIF frame consists of two subframes (for channels 1 and 2), each of which contains a 4-bit preamble, audio data of up to 24 bits, a V flag, a user bit, a channel status bit, and an even parity bit. Figure 25.3 shows the subframe format. According to this format, the Renesas SPDIF performs biphase-mark modulation (channel coding) that will make the transmission line's DC component a minimum value.

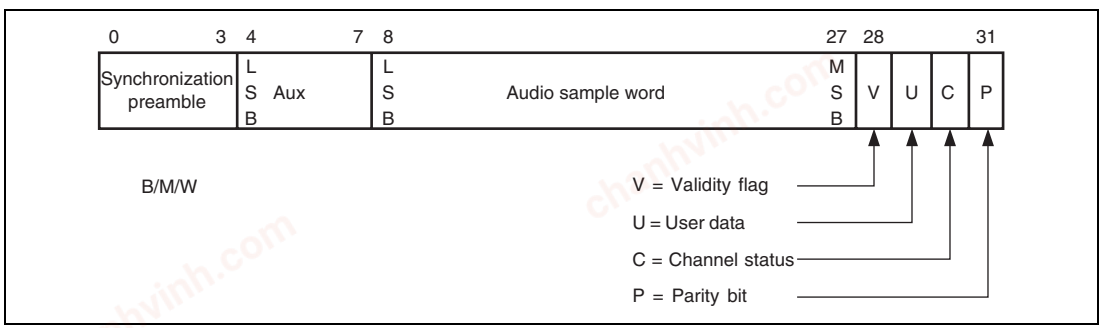

Figure 25.3 Subframe Format

chanhvinh.com

Figure 25.4 shows the block format, which consists of 192 continuous frames. One block begins at the starting frame (preamble B) and ends at the 192nd frame (frame 191), and the preamble is used to identify all subframes. Each block has a total of 384 subframes, which are classified into three categories: subframe 0 indicating the beginning of a new block, subframe 1 (usually the channel 1), and subframe 2 (usually the channel 2). Usually, the music data sent and received by the SPDIF is continuous so that continuous blocks appear.

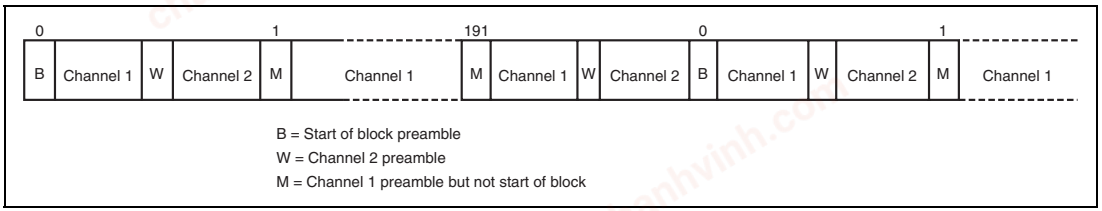

Figure 25.4 Block Format

Table 25.2 shows the binary values of the Renesas SPDIF preambles. The polarity of these preambles differs depending on the status of the preceding symbol (parity bit).

Table 25.2 Binary Preamble Values

Preamble	Preceding Symbol's Status = 0	Preceding Symbol's Status = 1
B	11101000	00010111
M	11100010	00011101
W	11100100	00011011

Note: As shown in figure 25.3, the even parity bit at time slot 31 of a subframe determines the type of a preamble for one cycle of transmission. Usually, therefore, any one is selected from the set states that are sent through the Renesas SPDIF. However, IEC60958 requires decoding both types in view of connection with the preamble polarity reversed; the Renesas SPDIF has preambles decoded according to table 25.2.

Channel status information is encoded at the rate of one bit per subframe, making the channel status information per block have a total of 192 bits for each of subframes 1 and 2. For the format of the channel status, refer to the IEC 60958 standard.

chanhvinh.com

25.6 Register

Table 25.3 shows the register configuration.

Table 25.3 Register Configuration

Channel	Register Name	Abbreviation	Address	Access Size
0 (Transmit)	Transmitter channel 1 audio register	TLCA	H'E801 2000	32
	Transmitter channel 2 audio register	TRCA	H'E801 2004	32
	Transmitter channel 1 status register	TLCS	H'E801 2008	32
	Transmitter channel 2 status register	TRCS	H'E801 200C	32
	Transmitter user data register	TUI	H'E801 2010	32
1 (Receive)	Receiver channel 1 audio register	RLCA	H'E801 2014	32
	Receiver channel 2 audio register	RRCA	H'E801 2018	32
	Receiver channel 1 status register	RLCS	H'E801 201C	32
	Receiver channel 2 status register	RRCS	H'E801 2020	32
	Receiver user data register	RUI	H'E801 2024	32
0, 1 (Common)	Control register	CTRL	H'E801 2028	32
	Status register	STAT	H'E801 202C	32
0, 1 (Common)	Transmitter DMA audio data register	TDAD	H'E801 2030	32
	Receiver DMA audio data register	RDAD	H'E801 2034	32

Note: All registers are longword registers and must be accessed as such.

A register diagram containing a 0 indicates that the write value should always be 0 (if the register is writeable) and that the read value should always be 0 (if readable).

chanhvinh.com

25.7 Register Descriptions

Legend:

Initial Value:	Register value after reset
—:	Undefined value
R/W:	Readable/writable register. The write value can be read.
R:	Read only register. The write value should always be 0.
R/WC0:	Readable/writable register. Writing 0 initializes the bit, but writing 1 is ignored.
R/WC1:	Readable/writable register. Writing 1 initializes the bit, but writing 0 is ignored.
W:	Write only register. Reading is prohibited. If this bit is reserved, the write value should always be 0.
—/W:	Write only, Read value undefined

25.7.1 Control Register (CTRL)

Bit:	31	30	29	28	27	26	25	24
	-	-	-	CKS	-	PB	RASS	
Initial value:	0	0	0	0	0	0	0	0
R/W:	R	R	R	R/W	R	R/W	R/W	R/W

Bit:	23	22	21	20	19	18	17	16
	TASS		RDE	TDE	NCSI	AOS	RME	TME
Initial value:	0	0	0	0	0	0	0	0
R/W:	R/W	R/W	R/W	R/W	R/W	R/W	R/W	R/W

Bit:	15	14	13	12	11	10	9	8
	REIE	TEIE	UBOI	UBUI	CREI	PAEI	PREI	CSEI
Initial value:	0	0	0	0	0	0	0	0
R/W:	R/W	R/W	R/W	R/W	R/W	R/W	R/W	R/W

Bit:	7	6	5	4	3	2	1	0
	ABOI	ABUI	RUII	TUII	RCSI	RCBI	TCSI	TCBI
Initial value:	0	0	0	0	0	0	0	0
R/W:	R/W	R/W	R/W	R/W	R/W	R/W	R/W	R/W

chanhvinh.com

Bit	Bit Name	Initial Value	R/W	Description
31 to 29	—	All 0	R	Reserved
28	CKS	0	R/W	Oversampling clock select Selects oversampling clock supply source. 0: AUDIO_X1 1: AUDIO CLK
27	—	0	R	Reserved
26	PB	0	R/W	Pass Back Passes transmitter SPDIF output into SPDIF receiver in SPDIF module. 0: Pass Back disabled 1: Pass Back enabled
25, 24	RASS	All 0	R/W	Receiver Audio Sample Bit Size These bits Indicate the receiver audio sample bit size (16, 20, or 24 bits), for data alignment purposes. 00: 16-bit sample 01: 20-bit sample 10: 24-bit sample 11: Reserved
23, 22	TASS	All 0	R/W	Transmitter Audio Sample Bit Size These bits Indicate the transmitter audio sample bit size (16, 20, or 24 bits), for data alignment purposes. 00: 16-bit sample 01: 20-bit sample 10: 24-bit sample 11: Reserved
21	RDE	0	R/W	Receiver DMA Enable Enables DMA requests for the receiver. 0: Receiver DMA disabled 1: Receiver DMA enabled
20	TDE	0	R/W	Transmitter DMA Enable Enables the DMA requests for the transmitter. 0: Transmitter DMA disabled 1: Transmitter DMA enabled

chanhvinh.com

Bit	Bit Name	Initial Value	R/W	Description
19	NCSI	0	R/W	New Channel Status Information Set this bit to 1 when new channel status information to be corrected is in the transmitter. 0: New channel status information has not been in transmitter 1: New channel status information has been in transmitter
18	AOS	0	R/W	Audio Only Samples Clear this bit to 0 when audio channel 1 and channel 2 registers contain user information. When this bit is set to 1, all user bits are cleared to 0. 0: User information present 1: User information not present
17	RME	0	R/W	Receiver Module Enable Enables the receiver module. 0: Receiver module disabled 1: Receiver module enabled
16	TME	0	R/W	Transmitter Module Enable Enables the transmitter module. 0: Transmitter module disabled 1: Transmitter module enabled
15	REIE	0	R/W	Receiver Error Interrupt Enable Enables the receiver error interrupts. 0: Receiver error interrupt disabled 1: Receiver error interrupt enabled
14	TEIE	0	R/W	Transmitter Error Interrupt Enable Enables the transmitter error interrupts. 0: Transmitter error interrupt disabled 1: Transmitter error interrupt enabled
13	UBOI	0	R/W	User Buffer Overrun Interrupt Enable Enables the user buffer overrun interrupts. 0: User buffer overrun interrupt disabled 1: User buffer overrun interrupt enabled

chanhvinh.com

Bit	Bit Name	Initial Value	R/W	Description
12	UBUI	0	R/W	User Buffer Underrun Interrupt Enable Enables the user buffer underrun interrupts. 0: User buffer underrun interrupt disabled 1: User buffer underrun interrupt enabled
11	CREI	0	R/W	Clock Recovery Error Interrupt Enable Enables the clock recovery error interrupts. 0: Clock recovery error interrupt disabled 1: Clock recovery error interrupt enabled
10	PAEI	0	R/W	Parity Error Interrupt Enable Enables the parity check error interrupts. 0: Parity check error interrupt disabled 1: Parity check error interrupt enabled
9	PREI	0	R/W	Preamble Error Interrupt Enable Enables the preamble check error interrupts. 0: Preamble error interrupt disabled 1: Preamble error interrupt enabled
8	CSEI	0	R/W	Channel Status Error Interrupt Enable Enables the channel status error interrupts. 0: Channel status error interrupt disabled 1: Channel status error interrupt enabled
7	ABOI	0	R/W	Audio Buffer Overrun Interrupt Enable Enables the receiver audio buffer overrun interrupts. 0: Audio buffer overrun interrupt disabled 1: Audio buffer overrun interrupt enabled
6	ABUI	0	R/W	Audio Buffer Underrun Interrupt Enable Enables the transmitter audio buffer underrun interrupts. 0: Audio buffer underrun interrupt disabled 1: Audio buffer underrun interrupt enabled
5	RUII	0	R/W	Receiver User Information Interrupt Enable Enables the receiver user information register full interrupts. 0: Receiver user information interrupt disabled 1: Receiver user information interrupt enabled

chanhvinh.com

Bit	Bit Name	Initial Value	R/W	Description
4	TUII	0	R/W	Transmitter User Information Interrupt Enable Enables the transmitter user information register empty interrupts. 0: Transmitter user information interrupt disabled 1: Transmitter user information interrupt enabled
3	RCSI	0	R/W	Receiver Channel Status Interrupt Enable Enables the receiver channel status register empty interrupts. 0: Receiver channel status interrupt disabled 1: Receiver channel status interrupt enabled
2	RCBI	0	R/W	Receiver Channel Buffer Interrupt Enable Enables the receiver audio channel buffer empty interrupts. 0: Receiver audio channel interrupt disabled 1: Receiver audio channel interrupt enabled
1	TCSI	0	R/W	Transmitter Channel Status Interrupt Enable Enables the transmitter channel status register empty interrupts. 0: Transmitter channel status interrupt disabled 1: Transmitter channel status interrupt enabled
0	TCBI	0	R/W	Transmitter Channel Buffer Interrupt Enable Enables the transmitter audio channel buffer empty interrupts. 0: Transmitter audio channel interrupt disabled 1: Transmitter audio channel interrupt enabled

chanhvinh.com

25.7.2 Status Register (STAT)

Bit:	31	30	29	28	27	26	25	24
	-	-	-	-	-	-	-	-
Initial value:	0	0	0	0	0	0	0	0
R/W:	R	R	R	R	R	R	R	R

Bit:	23	22	21	20	19	18	17	16
	-	-	-	-	-	-	-	CMD
Initial value:	0	0	0	0	0	0	0	0
R/W:	R	R	R	R	R	R	R	R

Bit:	15	14	13	12	11	10	9	8
	RIS	TIS	UBO	UBU	CE	PARE	PREE	CSE
Initial value:	1	1	0	0	0	0	0	0
R/W:	R	R	R/WC0	R/WC0	R/WC0	R/WC0	R/WC0	R/WC0

Bit:	7	6	5	4	3	2	1	0
	ABO	ABU	RUIR	TUIR	CSRX	CBRX	CSTX	CBTX
Initial value:	0	0	0	0	0	0	0	0
R/W:	R/WC0	R/WC0	R	R	R	R	R	R

Bit	Bit Name	Initial Value	R/W	Description
31 to 17	—	All 0	R	Reserved
16	CMD	0	R	Compressed Mode Data Sets if the data being received is compressed mode data (When bit 1 = 1 in the V flag and channel status). 0: Data is not in compressed mode 1: Data is in compressed mode
15	RIS	1	R	Receiver Idle State Sets if the receiver is in the idle state. 0: Receiver is not in idle state 1: Receiver in idle state
14	TIS	1	R	Transmitter Idle State Sets if the transmitter is in the idle state. 0: Transmitter is not in idle state 1: Transmitter is in idle state

chanhvinh.com

Bit	Bit Name	Initial Value	R/W	Description
13	UBO	0	R/WC0	User Buffer Overrun* Sets if the receiver user buffer overruns. This bit is cleared by writing 0 to the register. If bit REIE and bit UBOI in the control register are set this causes an interrupt. 0: User buffer has not overrun 1: User buffer has overrun
12	UBU	0	R/WC0	User Buffer Underrun* Sets if the transmitter user buffer underrun. This bit is cleared by writing 0. If bits TEIE and UBUI in the control register are set this causes an interrupt. 0: User buffer has not underrun 1: User buffer has underrun
11	CE	0	R/WC0	Clock Error* Sets when the clock recovery falls out of synchronization. This bit is cleared by writing 0. If bits REIE and CREI in the control register are set this causes an interrupt. 0: Clock recovery stable 1: Clock recovery error
10	PARE	0	R/WC0	Parity Error* Sets when the parity checker produces a fail result. This bit is cleared by writing 0. If bits REIE and PAEI in the control register are set this causes an interrupt. 0: Parity check correct 1: Parity error
9	PREE	0	R/WC0	Preamble Error* Sets when the start of word preamble fails to appear in the correct place. This bit is cleared by writing 0. If bits REIE and PREI in the control register are set this causes an interrupt. Note: Only set after a start of block preamble has occurred. 0: Preamble is in the correct place 1: Preamble error

chanhvinh.com

Bit	Bit Name	Initial Value	R/W	Description
8	CSE	0	R/WC0	Channel Status Error* Sets when the channel status information is written before the 32nd frame of the current block. This bit is cleared by writing 0. If bits TEIE and CSEI in the control register are set this causes an interrupt. 0: Channel status correct 1: Channel status error
7	ABO	0	R/WC0	Audio Buffer Overrun* Indicates that the receiver audio buffer is full in both the first and second stages and that data has been overwritten. This bit is cleared by writing 0. If bits REIE and ABOI in the control register are set then this causes an interrupt. 0: Receiver audio buffer has not overrun 1: Receiver audio buffer has overrun
6	ABU	0	R/WC0	Audio Buffer Underrun* Indicates that the transmitter audio buffer is empty in both the first and second stages and that the last data transmission has been repeated. This bit is cleared by writing 0. If bits TEIE and ABUI in the control register are set then this causes an interrupt. 0: Transmitter audio buffer has not underrun 1: Transmitter audio buffer has underrun
5	RUIR	0	R	Receiver User Information Register Status Indicates the status of the receiver user information register. This bit is cleared by reading from the receiver user register. If bit RUII in the control register is set then this causes an interrupt. 0: Receiver user information register is empty 1: Receiver user information register is full
4	TUIR	0	R	Transmitter User Information Register Status Indicates the status of the transmitter user information register. This bit is cleared by writing to the transmitter user register. If bit TUII in the control register is set then this causes an interrupt. 0: Transmitter user information register is full 1: Transmitter user information register is empty

chanhvinh.com

Bit	Bit Name	Initial Value	R/W	Description
3	CSRX	0	R	Channel 1 and Channel 2 Status for Receiver Indicates the status of the receiver channel status registers. This bit is cleared by reading from the receiver channel status registers. If bit RCSI in the control register is set this causes an interrupt. 0: Receiver channel status registers are empty 1: Receiver channel status registers are full
2	CBRX	0	R	Channel 1 and Channel 2 Buffers for Receiver Indicates the status of the receiver audio channel registers. This bit is cleared by reading from the receiver audio channel registers. If bit RCBI in the control register is set this causes an interrupt. 0: Receiver audio channel registers are empty 1: Receiver audio channel registers are full
1	CSTX	0	R	Channel 1 and Channel 2 Status for Transmitter Indicates the status of the transmitter channel status registers. This bit is cleared by writing to the transmitter channel status registers. If bit TCSI in the control register is set this causes an interrupt. 0: Transmitter channel status register is full 1: Transmitter channel status register is empty
0	CBTX	0	R	Channel 1 and Channel 2 Buffers for Transmitter Indicates the status of the transmitter audio channel registers. This bit is cleared by writing to the transmitter audio channel registers. If bit TCBI in the control register is set this causes an interrupt. 0: Transmitter audio channel registers are full 1: Transmitter audio channel registers are empty

Note: * When an error bit is detected during DMA transfer, DMA transfer settings must be made again. In this case, the Renesas SPDIF's module enable bit (either the RME or TME bit) and the DMA enable bit (either the RDE or TDE bit) must be disabled and the error status must be cleared before making DMA transfer settings again. Then the module enable bit should be set and DMA transfer can be started again.

chanhvinh.com

25.7.3 Transmitter Channel 1 Audio Register (TLCA)

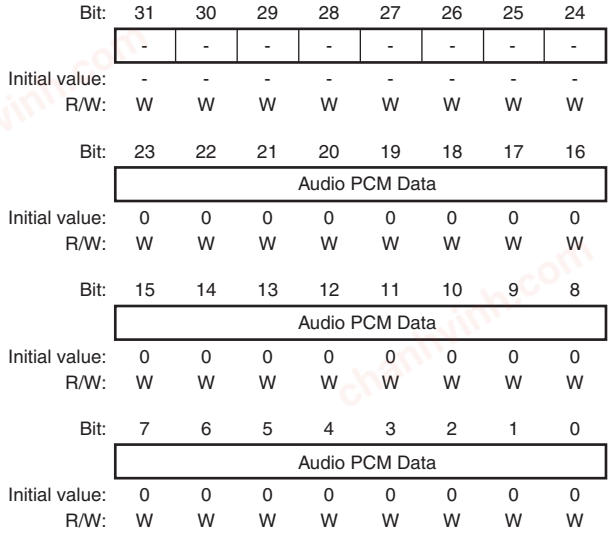

Bit	Bit Name	Initial Value	R/W	Description
31 to 24	—	—	W	Reserved
23 to 0	Audio PCM Data	All 0	W	Audio PCM Data LSB aligned PCM encoded audio data.

chanhvinh.com

25.7.4 Transmitter Channel 2 Audio Register (TRCA)

Bit:	31	30	29	28	27	26	25	24
	-	-	-	-	-	-	-	-
Initial value:	-	-	-	-	-	-	-	-
R/W:	W	W	W	W	W	W	W	W

Bit:	23	22	21	20	19	18	17	16
	Audio PCM Data							
Initial value:	0	0	0	0	0	0	0	0
R/W:	W	W	W	W	W	W	W	W

Bit:	15	14	13	12	11	10	9	8
	Audio PCM Data							
Initial value:	0	0	0	0	0	0	0	0
R/W:	W	W	W	W	W	W	W	W

Bit:	7	6	5	4	3	2	1	0
	Audio PCM Data							
Initial value:	0	0	0	0	0	0	0	0
R/W:	W	W	W	W	W	W	W	W

Bit	Bit Name	Initial Value	R/W	Description
31 to 24	—	—	W	Reserved
23 to 0	Audio PCM Data	All 0	W	Audio PCM Data LSB aligned PCM encoded audio data.

chanhvinh.com

25.7.5 Transmitter DMA Audio Data Register (TDAD)

Bit:	31	30	29	28	27	26	25	24
	-	-	-	-	-	-	-	-
Initial value:	-	-	-	-	-	-	-	-
R/W:	W	W	W	W	W	W	W	W

Bit:	23	22	21	20	19	18	17	16
	Audio PCM Data							
Initial value:	0	0	0	0	0	0	0	0
R/W:	W	W	W	W	W	W	W	W

Bit:	15	14	13	12	11	10	9	8
	Audio PCM Data							
Initial value:	0	0	0	0	0	0	0	0
R/W:	W	W	W	W	W	W	W	W

Bit:	7	6	5	4	3	2	1	0
	Audio PCM Data							
Initial value:	0	0	0	0	0	0	0	0
R/W:	W	W	W	W	W	W	W	W

Bit	Bit Name	Initial Value	R/W	Description
31 to 24	—	—	W	Reserved
23 to 0	Audio PCM Data	All 0	W	Audio PCM Data LSB aligned PCM encoded audio data.

chanhvinh.com

25.7.6 Transmitter User Data Register (TUI)

U-bit data in subframes is written in to this register. Because U-bit data is transmitted in a sequence of subframes 1 and 2, you need to update the data on a 16-frame basis. For the contents of the user bytes refer to the appropriate standard for the device in use. The user bits to be transmitted are set in sequence starting at the LSB.

Bit:	31	30	29	28	27	26	25	24
	User Byte 4							
Initial value:	0	0	0	0	0	0	0	0
R/W:	W	W	W	W	W	W	W	W

Bit:	23	22	21	20	19	18	17	16
	User Byte 3							
Initial value:	0	0	0	0	0	0	0	0
R/W:	W	W	W	W	W	W	W	W

Bit:	15	14	13	12	11	10	9	8
	User Byte 2							
Initial value:	0	0	0	0	0	0	0	0
R/W:	W	W	W	W	W	W	W	W

Bit:	7	6	5	4	3	2	1	0
	User Byte 1							
Initial value:	0	0	0	0	0	0	0	0
R/W:	W	W	W	W	W	W	W	W

Bit	Bit Name	Initial Value	R/W	Description
31 to 24	User Byte 4	All 0	W	U-bit information is stored here.
23 to 16	User Byte 3	All 0	W	
15 to 8	User Byte 2	All 0	W	
7 to 0	User Byte 1	All 0	W	

chanhvinh.com

25.7.7 Transmitter Channel 1 Status Register (TLCS)

The 30-bit register stores the channel status information to be transmitted. For each channel, channel status information per frame consists of 192 bits. Because necessary data covers only the 30 bits that are set in the following register, zeros continue to be sent after the transmission of the first 30 bits.

Bit:	31	30	29	28	27	26	25	24
	-	-	CLAC[1:0]		FS[3:0]			
Initial value:	-	-	0	0	0	0	0	0
R/W:	W	W	W	W	W	W	W	W

Bit:	23	22	21	20	19	18	17	16
	CHNO[3:0]				SRCNO[3:0]			
Initial value:	0	0	0	0	0	0	0	0
R/W:	W	W	W	W	W	W	W	W

Bit:	15	14	13	12	11	10	9	8
	CATCD[7:0]							
Initial value:	0	0	0	0	0	0	0	0
R/W:	W	W	W	W	W	W	W	W

Bit:	7	6	5	4	3	2	1	0
	-	-	CTL[4:0]					-
Initial value:	0	0	0	0	0	0	0	0
R/W:	W	W	W	W	W	W	W	W

Bit	Bit Name	Initial Value	R/W	Description
31, 30	—	—	W	Reserved
29, 28	CLAC[1:0]	All 0	W	Clock Accuracy 00: Level 2 01: Level 1 10: Level 3 11: Reserved
27 to 24	FS[3:0]	All 0	W	Sample Frequency (FS) 0000: 44.1 kHz 0010: 48 kHz 0011: 32 kHz

chanhvinh.com

Bit	Bit Name	Initial Value	R/W	Description
23 to 20	CHNO[3:0]	All 0	W	Channel Number 0000: Don't care 0001: A (left channel) 0010: B (right channel) 0011: C
19 to 16	SRCNO[3:0]	All 0	W	Source Number 0000: Don't care 0001: 1 0010: 2 0011: 3
15 to 8	CATCD[7:0]	All 0	W	Category Code (Example) 00000000: 2-channel general format 00000001: 2-channel compact disc (IEC 908) 00000010: 2-channel PCM encoder/decoder 00000011: 2-channel digital audio tape recorder
7, 6	—	All 0	W	Reserved The write value should always be 0.
5 to 1	CTL[4:0]	All 0	W	Control The control bits are copied from the source (see IEC60958 standard).
0	—	0	W	Reserved The write value should always be 0.

chanhvinh.com

25.7.8 Transmitter Channel 2 Status Register (TRCS)

The 30-bit register stores the channel status information to be transmitted. For each channel, channel status information per frame consists of 192 bits. Because necessary data covers only the 30 bits that are set in the following register, zeros continue to be sent after the transmission of the first 30 bits.

Bit:	31	30	29	28	27	26	25	24
	-	-	CLAC[1:0]		FS[3:0]			
Initial value:	-	-	0	0	0	0	0	0
R/W:	W	W	W	W	W	W	W	W

Bit:	23	22	21	20	19	18	17	16
	CHNO[3:0]				SRCNO[3:0]			
Initial value:	0	0	0	0	0	0	0	0
R/W:	W	W	W	W	W	W	W	W

Bit:	15	14	13	12	11	10	9	8
	CATCD[7:0]							
Initial value:	0	0	0	0	0	0	0	0
R/W:	W	W	W	W	W	W	W	W

Bit:	7	6	5	4	3	2	1	0
	-	-	CTL[4:0]					-
Initial value:	0	0	0	0	0	0	0	0
R/W:	W	W	W	W	W	W	W	W

Bit	Bit Name	Initial Value	R/W	Description
31, 30	—	—	W	Reserved
29, 28	CLAC[1:0]	All 0	W	Clock Accuracy 00: Level 2 01: Level 1 10: Level 3 11: Reserved
27 to 24	FS[3:0]	All 0	W	Sample Frequency (FS) 0000: 44.1 kHz 0010: 48 kHz 0011: 32 kHz

chanhvinh.com

Bit	Bit Name	Initial Value	R/W	Description
23 to 20	CHNO[3:0]	All 0	W	Channel Number 0000: Don't care 0001: A (left channel) 0010: B (right channel) 0011: C
19 to 16	SRCNO[3:0]	All 0	W	Source Number 0000: Don't care 0001: 1 0010: 2 0011: 3
15 to 8	CATCD[7:0]	All 0	W	Category Code (Example) 00000000: 2-channel general format 00000001: 2-channel compact disc (IEC 908) 00000010: 2-channel PCM encoder/decoder 00000011: 2-channel digital audio tape recorder
7, 6	—	All 0	W	Reserved The write value should always be 0.
5 to 1	CTL[4:0]	All 0	W	Control The control bits are copied from the source (see IEC60958 standard).
0	—	0	W	Reserved The write value should always be 0.

chanhvinh.com

25.7.9 Receiver Channel 1 Audio Register (RLCA)

Bit:	31	30	29	28	27	26	25	24
	-	-	-	-	-	-	-	-
Initial value:	-	-	-	-	-	-	-	-
R/W:	R	R	R	R	R	R	R	R

Bit:	23	22	21	20	19	18	17	16
	Audio PCM Data							
Initial value:	0	0	0	0	0	0	0	0
R/W:	R	R	R	R	R	R	R	R

Bit:	15	14	13	12	11	10	9	8
	Audio PCM Data							
Initial value:	0	0	0	0	0	0	0	0
R/W:	R	R	R	R	R	R	R	R

Bit:	7	6	5	4	3	2	1	0
	Audio PCM Data							
Initial value:	0	0	0	0	0	0	0	0
R/W:	R	R	R	R	R	R	R	R

Bit	Bit Name	Initial Value	R/W	Description
31 to 24	—	—	R	Reserved
23 to 0	Audio PCM Data	All 0	R	Audio PCM Data LSB aligned PCM encoded audio data.

chanhvinh.com

25.7.10 Receiver Channel 2 Audio Register (RRCA)

Bit:	31	30	29	28	27	26	25	24
	-	-	-	-	-	-	-	-
Initial value:	-	-	-	-	-	-	-	-
R/W:	R	R	R	R	R	R	R	R

Bit:	23	22	21	20	19	18	17	16
	Audio PCM Data							
Initial value:	0	0	0	0	0	0	0	0
R/W:	R	R	R	R	R	R	R	R

Bit:	15	14	13	12	11	10	9	8
	Audio PCM Data							
Initial value:	0	0	0	0	0	0	0	0
R/W:	R	R	R	R	R	R	R	R

Bit:	7	6	5	4	3	2	1	0
	Audio PCM Data							
Initial value:	0	0	0	0	0	0	0	0
R/W:	R	R	R	R	R	R	R	R

Bit	Bit Name	Initial Value	R/W	Description
31 to 24	—	—	R	Reserved
23 to 0	Audio PCM Data	All 0	R	Audio PCM Data LSB aligned PCM encoded audio data.

chanhvinh.com

25.7.11 Receiver DMA Audio Data (RDAD)

Bit:	31	30	29	28	27	26	25	24
	-	-	-	-	-	-	-	-
Initial value:	-	-	-	-	-	-	-	-
R/W:	R	R	R	R	R	R	R	R

Bit:	23	22	21	20	19	18	17	16
	Audio PCM Data							
Initial value:	0	0	0	0	0	0	0	0
R/W:	R	R	R	R	R	R	R	R

Bit:	15	14	13	12	11	10	9	8
	Audio PCM Data							
Initial value:	0	0	0	0	0	0	0	0
R/W:	R	R	R	R	R	R	R	R

Bit:	7	6	5	4	3	2	1	0
	Audio PCM Data							
Initial value:	0	0	0	0	0	0	0	0
R/W:	R	R	R	R	R	R	R	R

Bit	Bit Name	Initial Value	R/W	Description
31 to 24	—	—	R	Reserved
23 to 0	Audio PCM Data	All 0	R	Audio PCM Data LSB aligned PCM encoded audio data.

chanhvinh.com

25.7.12 Receiver User Data Register (RUI)

The register stores the U-bit data received through the Renesas SPDIF. Because U-bit data is stored in a sequence of subframes 1 and 2 starting at the LSB, you need to read the data on a 16-frame basis. For the contents of the user bytes refer to the appropriate standard for the device in use.

Bit:	31	30	29	28	27	26	25	24
	User Byte 4							
Initial value:	0	0	0	0	0	0	0	0
R/W:	R	R	R	R	R	R	R	R

Bit:	23	22	21	20	19	18	17	16
	User Byte 3							
Initial value:	0	0	0	0	0	0	0	0
R/W:	R	R	R	R	R	R	R	R

Bit:	15	14	13	12	11	10	9	8
	User Byte 2							
Initial value:	0	0	0	0	0	0	0	0
R/W:	R	R	R	R	R	R	R	R

Bit:	7	6	5	4	3	2	1	0
	User Byte 1							
Initial value:	0	0	0	0	0	0	0	0
R/W:	R	R	R	R	R	R	R	R

Bit	Bit Name	Initial Value	R/W	Description
31 to 24	User Byte 4	All 0	R	U-bit information is stored here.
23 to 16	User Byte 3	All 0	R	
15 to 8	User Byte 2	All 0	R	
7 to 0	User Byte 1	All 0	R	

chanhvinh.com

25.7.13 Receiver Channel 1 Status Register (RLCS)

The channel status is stored starting at the register's LSB in a way that subframe 1 received from the beginning of the block is stored. For the contents of the channel status register, refer to the IEC-60958 standard.

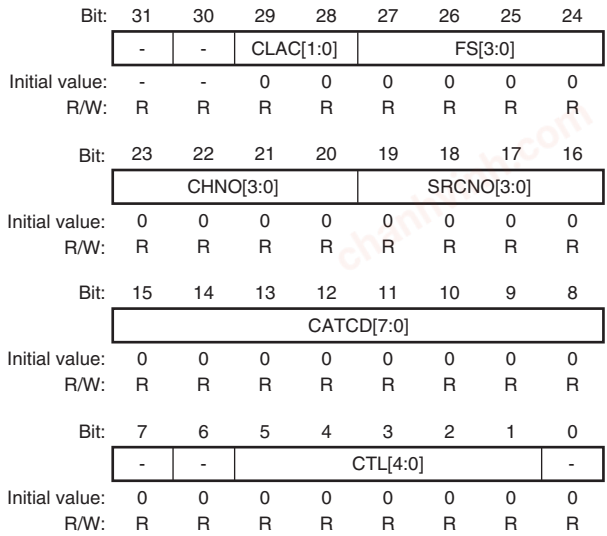

Bit	Bit Name	Initial Value	R/W	Description
31, 30	—	—	R	Reserved
29, 28	CLAC[1:0]	All 0	R	Clock Accuracy 00: Level 2 01: Level 1 10: Level 3 11: Reserved
27 to 24	FS[3:0]	All 0	R	Sample Frequency (FS) 0000: 44.1 kHz 0010: 48 kHz 0011: 32 kHz

chanhvinh.com

Bit	Bit Name	Initial Value	R/W	Description
23 to 20	CHNO[3:0]	All 0	R	Channel Number 0000: Don't care 0001: A (left channel) 0010: B (right channel) 0011: C
19 to 16	SRCNO[3:0]	All 0	R	Source Number 0000: Don't care 0001: 1 0010: 2 0011: 3
15 to 8	CATCD[7:0]	All 0	R	Category Code (Example) 00000000: 2-channel general format 00000001: 2-channel compact disc (IEC 908) 00000010: 2-channel PCM encoder/decoder 00000011: 2-channel digital audio tape recorder
7, 6	—	All 0	R	Reserved
5 to 1	CTL[4:0]	All 0	R	Control The control bits are copied from the source (see IEC60958 standard).
0	—	0	R	Reserved

chanhvinh.com

25.7.14 Receiver Channel 2 Status Register (RRCS)

The channel status is stored starting at the register's LSB in a way that subframe 2 received from the beginning of the block is stored. For the contents of the channel status register, refer to the IEC-60958 standard.

Bit:	31	30	29	28	27	26	25	24
	-	-	CLAC[1:0]		FS[3:0]			
Initial value:	-	-	0	0	0	0	0	0
R/W:	R	R	R	R	R	R	R	R

Bit:	23	22	21	20	19	18	17	16
	CHNO[3:0]				SRCNO[3:0]			
Initial value:	0	0	0	0	0	0	0	0
R/W:	R	R	R	R	R	R	R	R

Bit:	15	14	13	12	11	10	9	8
	CATCD[7:0]							
Initial value:	0	0	0	0	0	0	0	0
R/W:	R	R	R	R	R	R	R	R

Bit:	7	6	5	4	3	2	1	0
	-	-	CTL[4:0]					-
Initial value:	0	0	0	0	0	0	0	0
R/W:	R	R	R	R	R	R	R	R

Bit	Bit Name	Initial Value	R/W	Description
31, 30	—	—	R	Reserved
29, 28	CLAC[1:0]	All 0	R	Clock Accuracy 00: Level 2 01: Level 1 10: Level 3 11: Reserved
27 to 24	FS[3:0]	All 0	R	Sample Frequency (FS) 0000: 44.1 kHz 0010: 48 kHz 0011: 32 kHz

chanhvinh.com

Bit	Bit Name	Initial Value	R/W	Description
23 to 20	CHNO[3:0]	All 0	R	Channel Number 0000: Don't care 0001: A (left channel) 0010: B (left channel) 0011: C
19 to 16	SRCNO[3:0]	All 0	R	Source Number 0000: Don't care 0001: 1 0010: 2 0011: 3
15 to 8	CATCD[7:0]	All 0	R	Category Code (Example) 00000000: 2-channel general format 00000001: 2-channel compact disc (IEC 908) 00000010: 2-channel PCM encoder/decoder 00000011: 2-channel digital audio tape recorder
7, 6	—	All 0	R	Reserved
5 to 1	CTL[4:0]	All 0	R	Control The control bits are copied from the source (see IEC60958 standard).
0	—	0	R	Reserved

chanhvinh.com

25.8 Functional Description—Transmitter

25.8.1 Transmitter Module

The transmitter module transmits PCM data and auxiliary information after encoding it according to the method of biphase-mark modulation that complies with the IEC60958 standard (SPDIF).

The clock for the transmitter module is an oversampling clock supplied from the outside. This clock usually selects a value that serves as an oversample at a frequency eight times larger than the clock frequency required for biphase-mark encoding. In this case, the clock frequency required to transmit 32 time slots in a subframe is 512 times as large as the sample frequency for audio data.

Audio data and channel status information are first written into the module's channel 1 and then into channel 2. Generally, the channel status need to be written only when the information changes. The SPDIF module requests that the channel status be written in 30 frames -- when all the current channel status data have been transmitted. You need to write somewhere between frame 31 and the beginning of the next block of 192 frames.

The audio data is stored in a double buffer arrangement. To make sure that the first stage buffer is empty, you can send an interrupt request or poll the status register. DMA transfers send channel 1 audio data on the first request and channel 2 data on the second.

The channel status information is stored in the 30-bit registers of channels 1 and 2. For each channel, the channel status information per frame consists of 192 bits. Because necessary data covers only 30 bits, zeros continue to be sent after the transmission of the first 30 bits until the block is completed.

User data forms a 32-bit double buffer arrangement. You can make sure that the first stage buffer is empty by either sending an interrupt request or polling the status register. Usually, information about the user data will become insufficient with the length of data between blocks. Transmission takes place in a sequence of channels 1 and 2. For the user data within a block, 384 bits are transmitted before the next block is continuously transmitted.

The audio data handled by the Renesas SPDIF module is a linear PCM, making it possible to set up to 24 bits. For this reason, the V flag indicating that audio data is a linear PCM remains to be 0. The V flag involves no register-based setting. An even parity is created for each 32 bits of serial output data (excluding the preamble).

Note: When transmitter user buffer underrun occurs, the current data in the buffer data of SPDIF is transmitted until the next data is filled.

chanhvinh.com

25.8.2 Transmitter Module Initialization

The device defaults to an idle state when it comes out of reset, or can be put into an idle state when 0 is written to the TME bit in the CTRL register. When the transmitter module is idle, it has the following settings:

- The transmitter idle status bit (TIS) is set to 1, all other status bits are cleared to 0.
- Preamble generation is invalid.
- Synchronization between channels 1 and 2 is set to 0 (0 for channel 1, 1 for channel 2).
- Both word_count and frame_count are set to 0.
- The output from the biphase-mark encoder is set to 0.

Channel status, user and audio data registers will retain its value prior to putting the module into idle. To exit the idle state the user must write 1 to the TME bit in the CTRL register.

25.8.3 Initial Settings for Transmitter Module

When the TME bit is set to 1, the TUIR and CSTX bits are set to 1. After that, if data is written in the order of 1) TUI and 2) TLCS and TRCS, a channel status error will occur. To avoid this, be sure to write data in the order of 1) TLCS and TRCS and 2) TUI.

Before writing the first audio data (write access to TLCA or TRCA by the CPU or write access to TDAD by the DMA transfer) after setting the TME bit to 1, be sure to check that the CSTX and TUIR bits are cleared by writing to TLCS, TRCS, and TUI.

chanhvinh.com

25.8.4 Transmitter Module Data Transfer

Once the transmitter module has left the idle state, it is ready for data transfer. Data transfer timing can be achieved in three ways. Either the transfer is done by interrupts, DMA requests or by polling the status register. There is a shared interrupt line (for both transmit and receive) and a single transmitter DMA request line.

Figure 25.5 shows a data transfer with an interrupt for the transmitter.

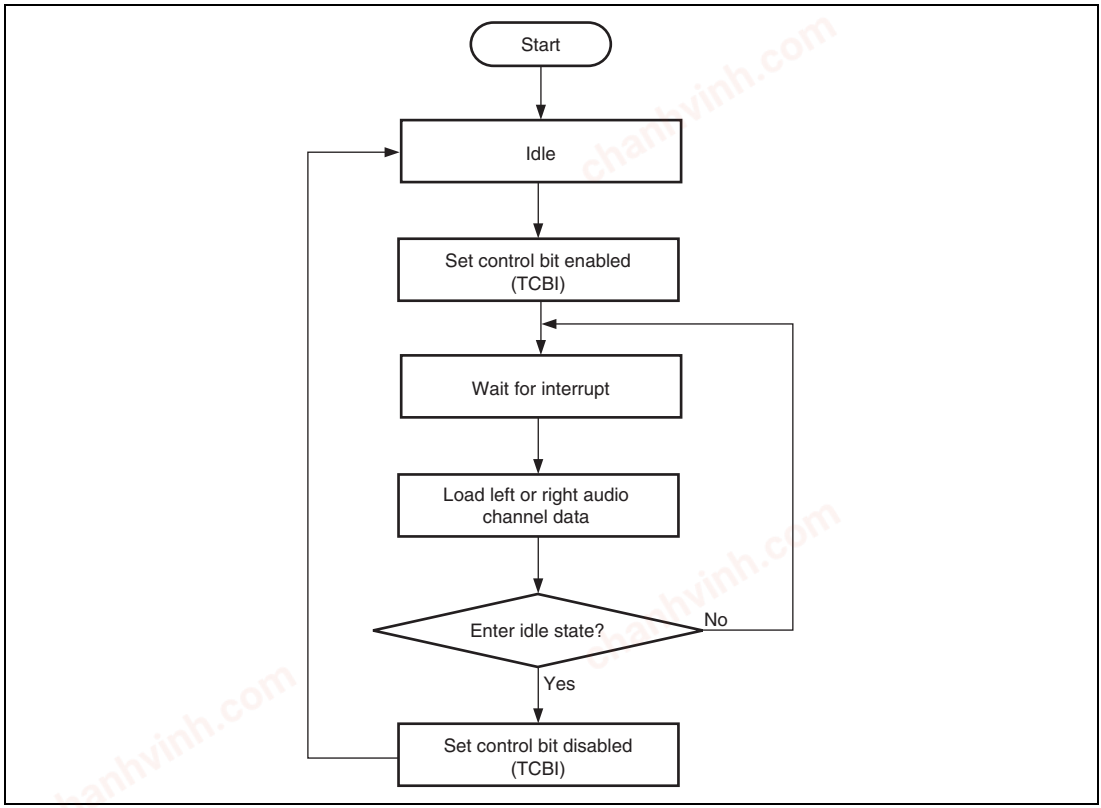

Figure 25.5 Transmitter Data Transfer Flow Diagram - Interrupt Driven

chanhvinh.com

Figure 25.6 shows a data transfer with a DMA transfer for the transmitter.

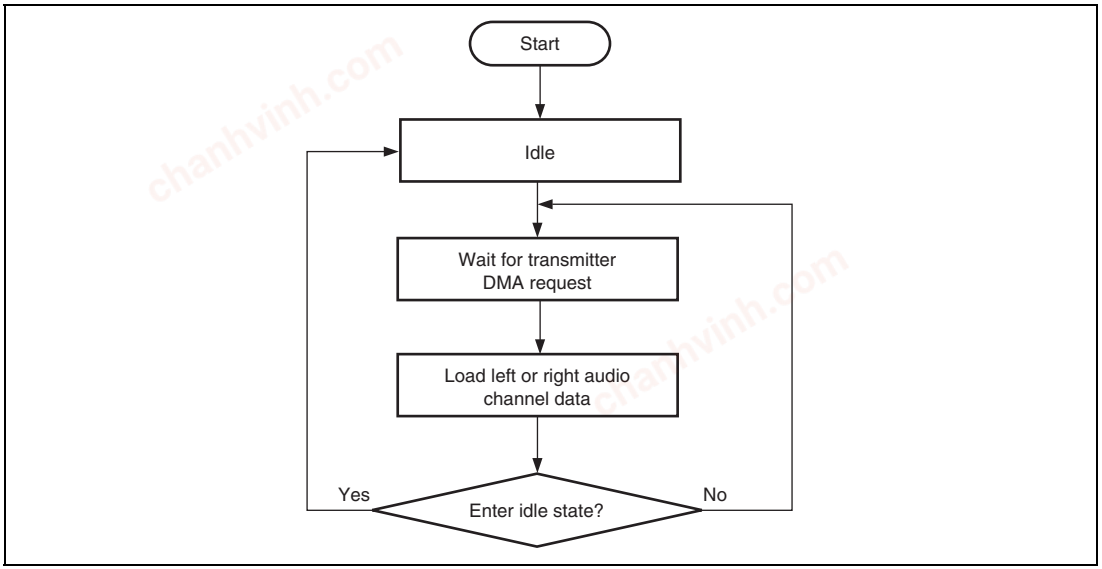

Figure 25.6 Transmitter Data Transfer Flow Diagram—DMA Request Driven

Channel status information is required to be updated when the information has changed. Because the updating needs to be done before the transmission of the next block, the channel status to be updated should be written after 30 frames have been sent; this is indicated either by an interrupt or by polling the status bit. If channel status is written before 30 frames have been sent (while current information is being sent) then an interrupt indicates that the channel status error bit (CSE) in the status register has been set.

Note: 30 frames contains all the valid information in a single channel status block.

chanhvinh.com

25.9 Functional Description—Receiver

25.9.1 Receiver Module

The receiver module demodulates data and clock signals from the input encoded according to the IEC60958 standard. The encoded data, shown in linear PCM format, is stored into the audio data register. The register also stores the channel status and user information being received simultaneously as auxiliary information.

The main clock for the receiver module is an oversampling clock supplied from the outside. The module operates at a frequency four times as large as the oversampling clock.

Note: The oversampling clock is the same for the transmitter and receiver.

Clock recovery is performed using a pulse width counter and averaging filters to produce a sampling pulse in the middle of each bit in the datastream. A clock error status bit indicates clock synchronization loss. Synchronization is achieved when a preamble occurs on the data stream for the first time. Continuous adjustment prevents jitter and/or clock drift from affecting clock recovery, provided that they fall within the clock recovery specifications.

Once the clock recovery is successful the biphase-mark decoder initiates its preamble detection. The decoder searches for the start of block preamble (see table 25.2). A preamble error status bit indicates that following preambles have not appeared at the correct time, such failures are most likely caused by transmission loss or interference.

Even parity checking is performed on the decoded data. A discrepancy will result in the parity error status bit being set.

The SPDIF module acquires user data and channel status information in addition to audio data. The audio is stored in a double buffer arrangement. Either an interrupt request because of a full buffer or polling of the status bit will indicate when the data is ready to be read. DMA transfers receive channel 1 audio data on the first request and channel 2 data on the second.

Channel status is stored in a 30-bit register. Channel status information is received at 1-bit per subframe. Therefore the registers will not be full until a total of 30 frames for each channel have been received. New channel status is compared with the current data to see if it has changed and is only read by the processor if it has. User data, which is also received at the same time, is stored into the register on a subframe basis, so that the reception is completed when 16 frames are reached.

chanhvinh.com

Notes: 1. Channel status data requests do not support DMA.
2. When receiver user buffer overrun occurs, the current data in the buffer data of SPDIF is overwritten by the next incoming data from SPDIF interface.

25.9.2 Receiver Module Initialization

The device defaults to an idle state when it comes out of reset, or can be put into an idle state by writing 0 to bit RME in the CTRL register. Whilst idle the module has the following settings:

- The receiver idle status bit is set to 1, all other status bits are cleared to 0.
- Synchronization between channels 1 and 2 is set to 0 (0 for channel 1, 1 for channel 2).
- Both Word_count and frame_count are set to 0.

Channel status registers, user data registers and audio data registers will retain its value prior to putting the module into idle. To exit the idle state the user must write 1 to the bit RME in the CTRL register.

25.9.3 Receiver Module Data Transfer

Once the module has left the idle state it is ready for data transfer. Data transfer timing can be achieved in three ways. The transfer can be done by interrupts, or by polling the status register, or by DMA. There is a shared interrupt line (transmit and receive) and a single receiver DMA request line. Data transfer for the receiver can be interrupted by error signals caused by:

1. Clock recovery failure.
2. Transmission loss or interference – indicated by a preamble error.
3. Parity check failure.

Transmission loss or interference can cause the start of subframe or start of block preamble to be misplaced or not present.

Parity check failure occurs when the parity bit is incorrect, this can be caused by any of the above.

- Clock Recovery Deviation
  The receive margin for clock recovery is based on the following equation:

$$M = \left| \left(0.5 - \frac{1}{2N} \right) - (L - 0.5)\, F - \frac{|D - 0.5|}{N} (1 + F) \right| \times 100\%$$

chanhvinh.com

where M = receive margin

N = oversampling rate

L = frame length = 33

D = duty cycle = 0.6

F = oversampling clock deviation = Level II accuracy = 1000 in $10e^{-6}$

Figure 25.7 indicates what the receive margin M represents

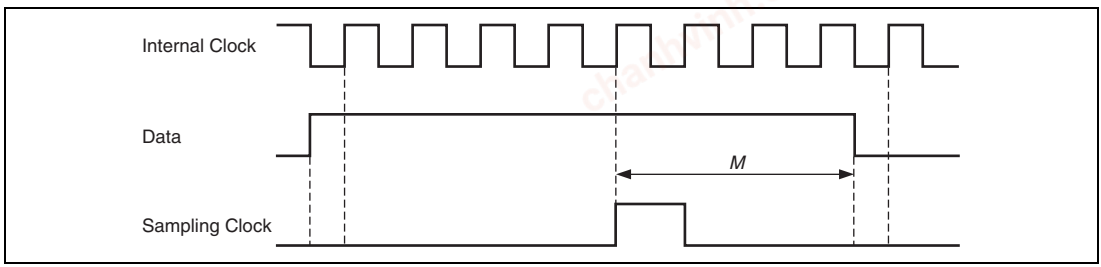

Figure 25.7 Receive Margin

Introducing jitter into the equation gives the following inequality.

$$j \leq \left| \left(0.5 - \frac{1}{2N}\right) - (L - 0.5)\,F - \frac{|D - 0.5|}{N}\,(1 + F) \right| \times 100\%$$

J = clock jitter

Eight times oversampling produces a receive margin = 39.25%

Four times oversampling produces a receive margin = 31.75%

Two times oversampling produces a receive margin = 16.75%

The fastest sample frequency is 48 kHz. This requires a clock speed of 128 × 48 kHz = 6.144 MHz. The worst case jitter in one cycle is specified at 40 ns = 24.5% of the period. This means that an oversampling rate of 4 or more will satisfy the inequality and therefore be sufficient for clock recovery.

chanhvinh.com

Figure 25.8 illustrates the receiver data transfer using interrupts.

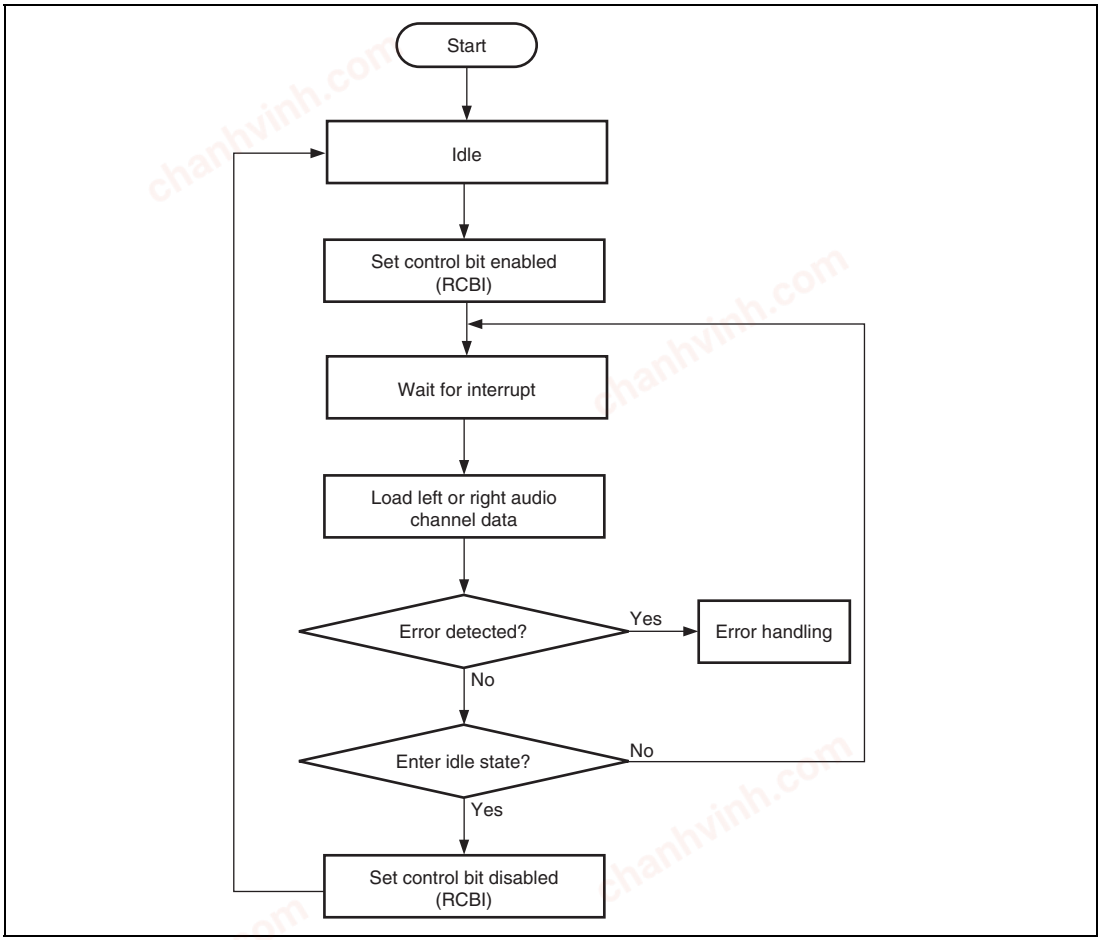

Figure 25.8 Receiver Data Transfer Flow Diagram - Interrupt Driven

Interrupts to indicate that the channel status information register is full occur after frame 30 has been received and only if the information has changed. When the first four bytes have been stored an interrupt occurs.

chanhvinh.com

25.10 Disabling the Module

25.10.1 Transmitter and Receiver Idle

The transmitter or receiver modules can be disabled by writing 0 to the idle bit in the control register (TME for the transmitter and RME for the receiver). The idle state can be detected by polling the idle bit in the status register (TIS and RIS).

25.11 Compressed Mode Data

Compressed mode data is defined in the IEC 61937 specification. This module only detects compressed mode data. This is done by checking the parity flag (V flag) and bit 1 in the channel status data. If both are one then the data is in compressed mode. This is indicated by the setting of the CMD bit in the status register.

Note: Only the receiver detects compressed mode data since the information is not relevant to the transmitter.

25.12 References

IEC60958 Digital Audio Interface

IEC61937 Compressed Mode Digital Audio Interface

chanhvinh.com

25.13 Usage Notes

25.13.1 Clearing TUIR

After TUI is written to, the TUIR bit is cleared only after transmission of a maximum of one frame is completed. When using a transmitter user information interrupt to write data to TUI, check that the TUIR bit is cleared before terminating the interrupt handling routine so that the interrupt is not unexpectedly accepted again.

25.13.2 Frequency of Clock Input for Audio

The frequency of the clock input to the AUDIO_X1 and AUDIO_X2 or AUDIO_CLK must be lower than the P1ϕ frequency.

chanhvinh.com

Section 26 CD-ROM Decoder

The CD-ROM decoder decodes streams of data transferred from the CD-DSP. When the medium is CD-DA*[1], the data stream is not input to the CD-ROM decoder because it consists of PCM data. In the case of CD-ROM*[2], the stream of data is input and the CD-ROM decoder performs sync code detection and maintenance, descrambling, ECC correction, and EDC checking, and outputs the resulting stream of data.

However, since the stream received by the CD-ROM decoder is assumed to consist of data from a CD-ROM transferred via the serial sound interface, the decoder does not bother with the subcodes defined in the CD-DA standard.

Notes: 1. Compliant with JIS S 8605 (Red Book)
2. Compliant with JIS X 6281 (Yellow Book)

26.1 Features

- Sync-code detection and maintenance

  Detects sync codes from the CD-ROM and is capable of providing sync-code maintenance (automatic interpolation of sync codes) when the sync code cannot be detected because of defects such as scratches on the disc.

  Five sector-synchronization modes are supported: automatic sync maintenance mode, external sync mode, interpolated sync mode, and interpolated sync plus external sync mode.
- Descrambling
- ECC support

  P-parity-based correction, Q-parity-based correction, PQ correction, and QP correction are available.

  PQ correction and QP correction can be applied repeatedly up to three times. This, however, depends on the speed of the CD. For example, three iterations are possible when the CD-ROM decoder is operating at 60 MHz with a double-speed CD drive.

  Two buffers are provided due to the need for ECC correction. This allows parallel operation, where ECC correction is performed in one buffer while the data stream is being received in the other.
- EDC checking

  The EDC is checked before and after correction based on the ECC. Furthermore, an operating mode is available in which, if the result of pre-correction EDC checking indicates no errors, ECC correction is not performed regardless of the result of syndrome calculation.

chanhvinh.com

- Data buffering control

  The CD-ROM decoder outputs data to the buffer area in a specific format where the sync code is at the head of the data for each sector.

26.1.1 Formats Supported by CD-ROM Decoder

This module supports the five formats shown in figure 26.1.

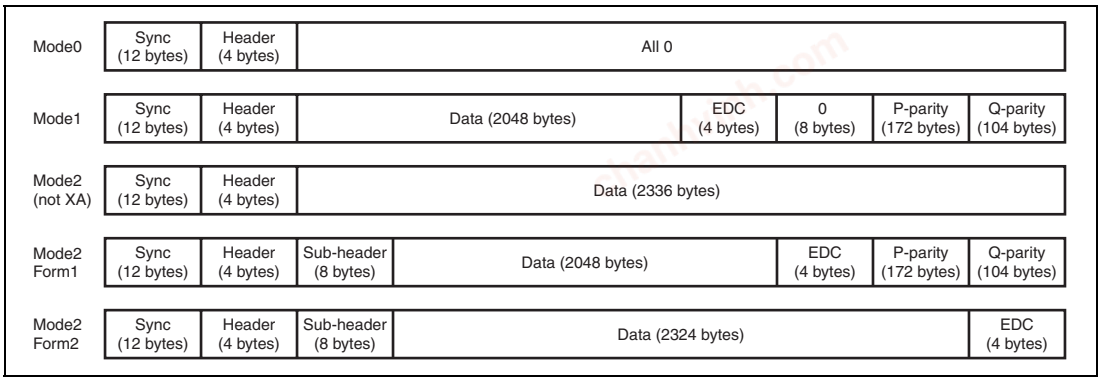

Figure 26.1 Formats Supported by CD-ROM Decoder

chanhvinh.com

26.2 Block Diagrams

Figure 26.2 is a block diagram of the CD-ROM decoder functions of this LSI and the bus bridge for connection to the bus, that is, of the elements required to implement the CD-ROM decoder function.

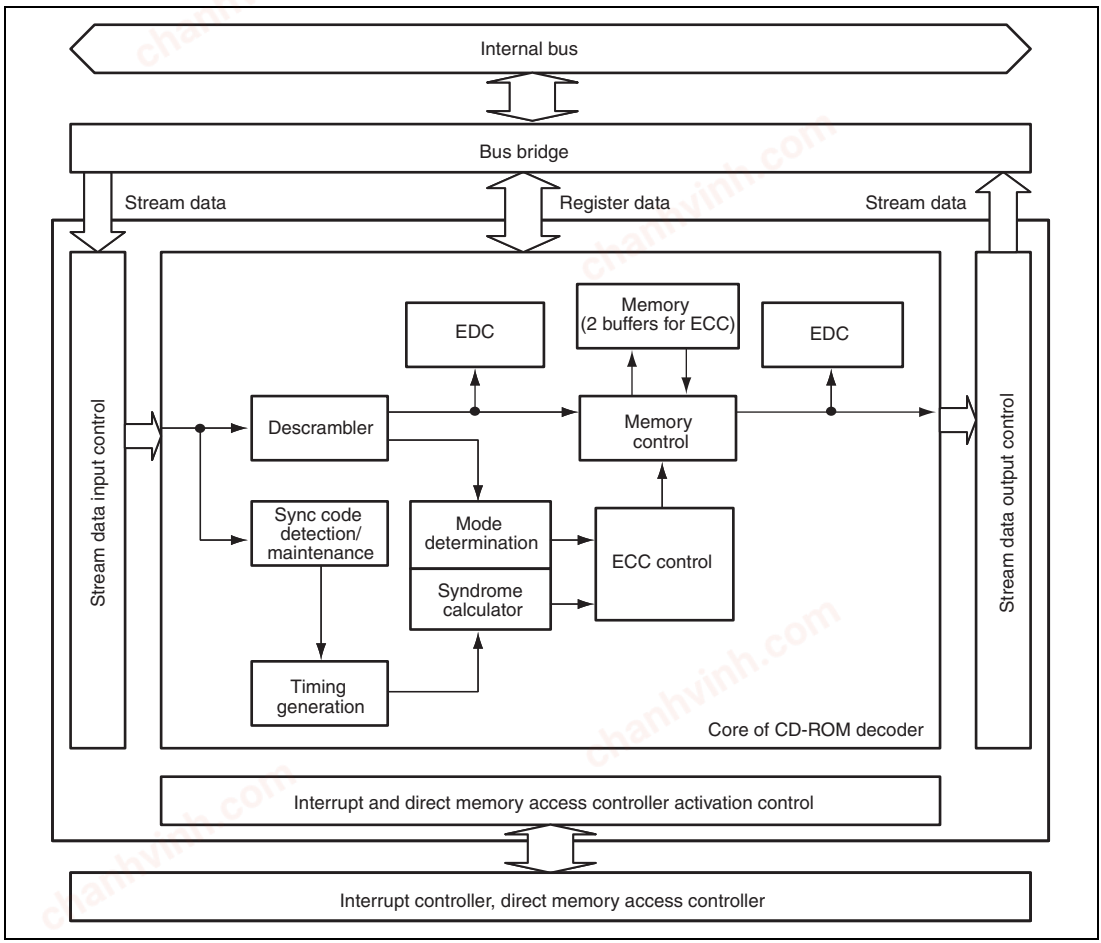

Figure 26.2 Block Diagram

The core of the CD-ROM decoder executes a series of processing required for CD-ROM decoding, including descrambling, sync code detection, ECC correction (P- and Q-parity-based correction), and EDC checking. The core includes sufficient memory to hold two sectors.

chanhvinh.com

Input data come from the internal bus and output data go out via the internal bus along a single line each, but the bus bridge logic sets up branches for the register access port and stream data port.

The stream data from the CD-DSP are transferred via the serial sound interface to the stream data input control block. They are then subjected to descrambling, ECC correction, and EDC checking as they pass through the CD-ROM decoder. After these processes, data from one sector are obtained. The data are subsequently transferred to the stream-data buffer via the stream-data output control block. Data can be transferred by either the direct memory access controller or the CPU.

Figure 26.3 is a block diagram of the bus-bridge logic.

Since the input stream is transferred over the serial sound interface, transfer is relatively slow. On the other hand, data from the output stream can be transferred at high speeds because they are already in the core of the CD-ROM decoder. Since the data for output are buffered in SDRAM or other memory, they must be transferred at high speeds in order to reduce the busy rate of the SDRAM. For this reason, the data for the output stream are read out before the CD-ROM decoder receives an output stream data read request from the internal bus. This allows the accumulation of streaming data in the registers of the bus bridge, so that the data are ready for immediate output to the internal bus upon a request from the internal bus. Accordingly, the reception of a request to read from registers other than the stream-data registers after the stream data has already been read out and stored in the register of the bus bridge is possible. To cope with this, the CD-ROM decoder is provided with separate intermediary registers for the output stream-data register and the other registers.

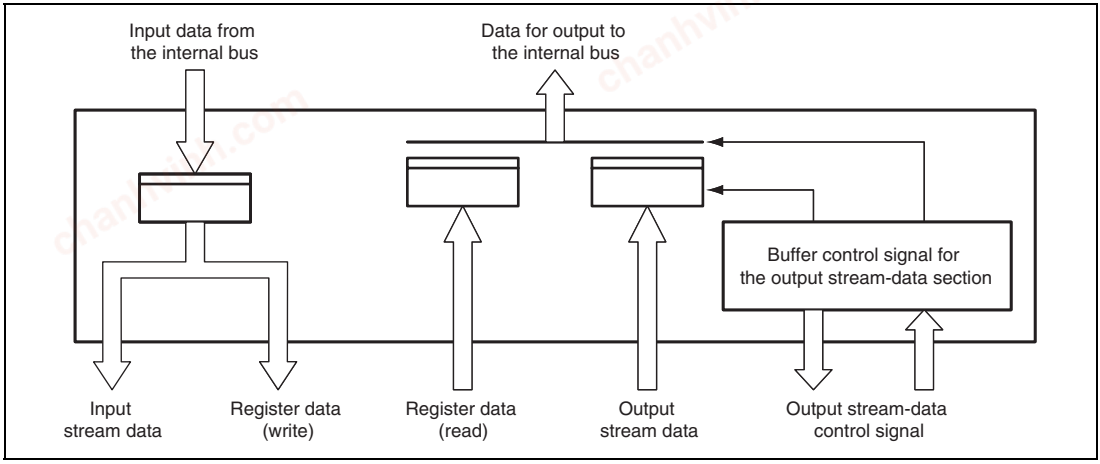

Figure 26.3 Schematic Diagram of the Bus Bridge

chanhvinh.com

Figure 26.4 is a schematic diagram of the stream-data input control block. The stream-data input controller contains logic that controls the stream of input data and a register that is used to change the control mode of the CD-ROM decoder.

The serial sound interface mode used to transfer the stream data may affect the order (through the endian setting) or lead to padding before the data is transferred. To handle the different arrangements of data appropriately, the stream-data input control block includes a register for changing the operating mode and generates signals to control the core of the CD-ROM decoder.

The data holding registers for the input stream consists of two 16-bit registers. The data holding registers are controlled according to the mode set in the control register. For example, controlling the order in which 16-bit data is supplied to the core of the CD-ROM decoder (sending the second 16-bytes first or vice versa). It is also possible to stop the supply of padding data to the core of the CD-ROM decoder.

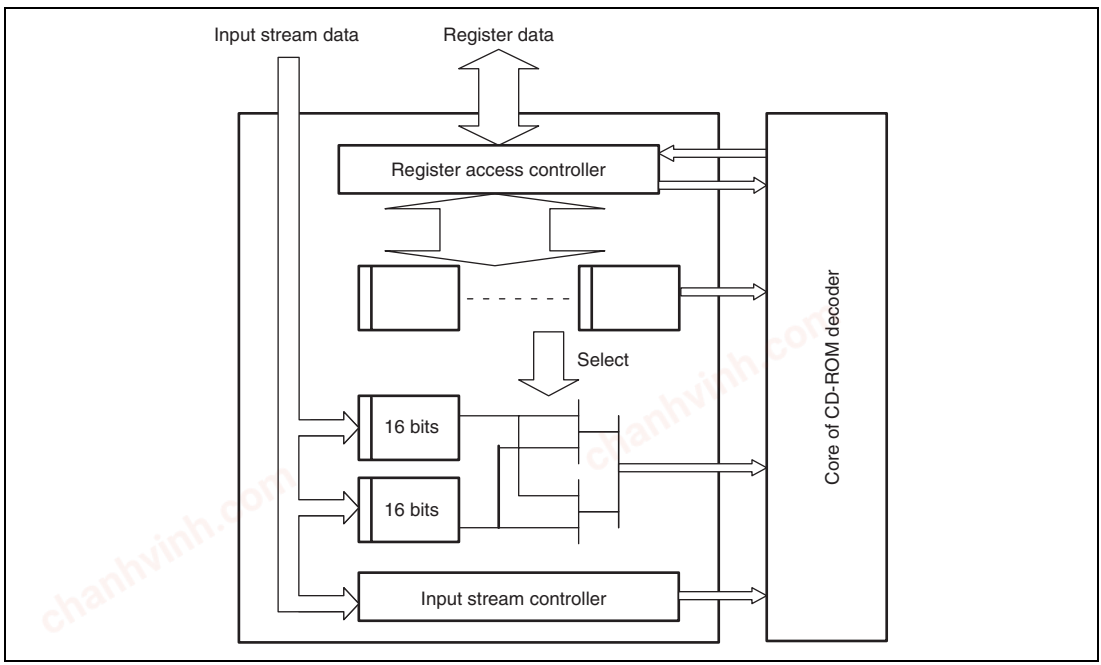

Figure 26.4 Schematic Diagram of the Stream-Data Input Control Block

chanhvinh.com

Figure 26.5 is a schematic diagram of the stream-data output control block.

On recognizing that one sector of CD-ROM data is ready in the core of the CD-ROM decoder, this block ensures that the output stream-data register in the bus bridge section is empty and then starts to acquire the data for output from the core of the CD-ROM decoder.

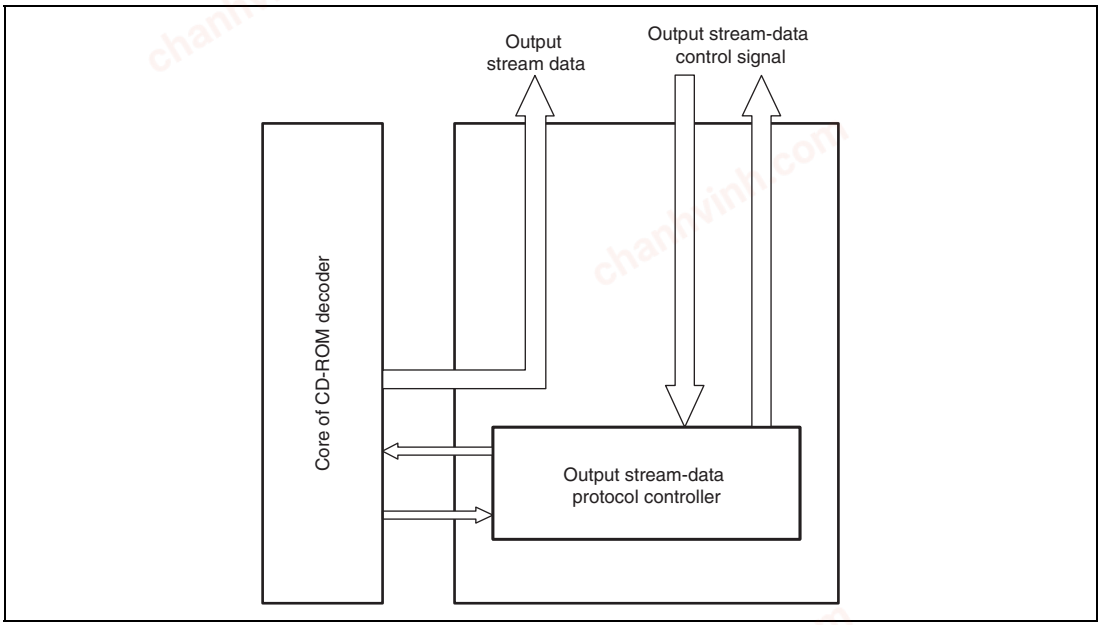

Figure 26.5 Schematic Diagram of the Stream-Data Output Control Block

This block has functions related to interrupts and direct memory access controller activation control such as suspending and masking of interrupts, turning interrupt flags off after they are read, asserting the activation signal to the direct memory access controller, and negating the activation signal according to the detected amount of data that has been transferred.

chanhvinh.com

26.3 Register Descriptions

This module has the following registers.

Table 26.1 Register Configuration

Name	Abbreviation	R/W	Initial Value	Address	Access Size
Enable control register	CROMEN	R/W	H'00	H'E8005000	8
Sync code-based synchronization control register	CROMSY0	R/W	H'89	H'E8005001	8
Decoding mode control register	CROMCTL0	R/W	H'82	H'E8005002	8
EDC/ECC check control register	CROMCTL1	R/W	H'D1	H'E8005003	8
Automatic decoding stop control register	CROMCTL3	R/W	H'00	H'E8005005	8
Decoding option setting control register	CROMCTL4	R/W	H'00	H'E8005006	8
HEAD20 to HEAD22 representation control register	CROMCTL5	R/W	H'00	H'E8005007	8
Sync code status register	CROMST0	R	H'00	H'E8005008	8
Post-ECC header error status register	CROMST1	R	H'00	H'E8005009	8
Post-ECC subheader error status register	CROMST3	R	H'00	H'E800500B	8
Header/subheader validity check status register	CROMST4	R	H'00	H'E800500C	8
Mode determination and link sector detection status register	CROMST5	R	H'00	H'E800500D	8
ECC/EDC error status register	CROMST6	R	H'00	H'E800500E	8
Buffer status register	CBUFST0	R	H'00	H'E8005014	8
Decoding stoppage source status register	CBUFST1	R	H'00	H'E8005015	8
Buffer overflow status register	CBUFST2	R	H'00	H'E8005016	8
Pre-ECC correction header: minutes data register	HEAD00	R	H'00	H'E8005018	8
Pre-ECC correction header: seconds data register	HEAD01	R	H'00	H'E8005019	8
Pre-ECC correction header: frames (1/75 second) data register	HEAD02	R	H'00	H'E800501A	8
Pre-ECC correction header: mode data register	HEAD03	R	H'00	H'E800501B	8

chanhvinh.com

Name	Abbreviation	R/W	Initial Value	Address	Access Size
Pre-ECC correction subheader: file number (byte 16) data register	SHEAD00	R	H'00	H'E800501C	8
Pre-ECC correction subheader: channel number (byte 17) data register	SHEAD01	R	H'00	H'E800501D	8
Pre-ECC correction subheader: sub-mode (byte 18) data register	SHEAD02	R	H'00	H'E800501E	8
Pre-ECC correction subheader: data type (byte 19) data register	SHEAD03	R	H'00	H'E800501F	8
Pre-ECC correction subheader: file number (byte 20) data register	SHEAD04	R	H'00	H'E8005020	8
Pre-ECC correction subheader: channel number (byte 21) data register	SHEAD05	R	H'00	H'E8005021	8
Pre-ECC correction subheader: sub-mode (byte 22) data register	SHEAD06	R	H'00	H'E8005022	8
Pre-ECC correction subheader: data type (byte 23) data register	SHEAD07	R	H'00	H'E8005023	8
Post-ECC correction header: minutes data register	HEAD20	R	H'00	H'E8005024	8
Post-ECC correction header: seconds data register	HEAD21	R	H'00	H'E8005025	8
Post-ECC correction header: frames (1/75 second) data register	HEAD22	R	H'00	H'E8005026	8
Post-ECC correction header: mode data register	HEAD23	R	H'00	H'E8005027	8
Post-ECC correction subheader: file number (byte 16) data register	SHEAD20	R	H'00	H'E8005028	8
Post-ECC correction subheader: channel number (byte 17) data register	SHEAD21	R	H'00	H'E8005029	8
Post-ECC correction subheader: sub-mode (byte 18) data register	SHEAD22	R	H'00	H'E800502A	8
Post-ECC correction subheader: data type (byte 19) data register	SHEAD23	R	H'00	H'E800502B	8
Post-ECC correction subheader: file number (byte 20) data register	SHEAD24	R	H'00	H'E800502C	8

chanhvinh.com

Name	Abbreviation	R/W	Initial Value	Address	Access Size
Post-ECC correction subheader: channel number (byte 21) data register	SHEAD25	R	H'00	H'E800502D	8
Post-ECC correction subheader: sub-mode (byte 22) data register	SHEAD26	R	H'00	H'E800502E	8
Post-ECC correction subheader: data type (byte 23) data register	SHEAD27	R	H'00	H'E800502F	8
Automatic buffering setting control register	CBUFCTL0	R/W	H'04	H'E8005040	8
Automatic buffering start sector setting: minutes control register	CBUFCTL1	R/W	H'00	H'E8005041	8
Automatic buffering start sector setting: seconds control register	CBUFCTL2	R/W	H'00	H'E8005042	8
Automatic buffering start sector setting: frames control register	CBUFCTL3	R/W	H'00	H'E8005043	8
ISY interrupt source mask control register	CROMST0M	R/W	H'00	H'E8005045	8
CD-ROM decoder reset control register	ROMDECRST	R/W	H'00	H'E8005100	8
CD-ROM decoder reset status register	RSTSTAT	R	H'00	H'E8005101	8
Serial sound interface data control register	SSI	R/W	H'18	H'E8005102	8
Interrupt flag register	INTHOLD	R/W	H'00	H'E8005108	8
Interrupt source mask control register	INHINT	R/W	H'00	H'E8005109	8
CD-ROM decoder stream data input register	STRMDIN0	R/W	H'0000	H'E8005200	Read: 16 Write: 16/32
CD-ROM decoder stream data input register	STRMDIN2	R/W	H'0000	H'E8005202	16
CD-ROM decoder stream data output register	STRMDOUT0	R	H'0000	H'E8005204	16, 32

chanhvinh.com

26.3.1 Enable Control Register (CROMEN)

The enable control register (CROMEN) enables subcode processing and CD-ROM decoding, and stops CD-ROM decoding forcibly.

Bit:	7	6	5	4	3	2	1	0
	SUBC_EN	CROM_EN	CROM_STP	-	-	-	-	-
Initial value:	0	0	0	0	0	0	0	0
R/W:	R/W	R/W	R/W	R/W	R/W	R/W	R/W	R/W

Bit	Bit Name	Initial Value	R/W	Description
7	SUBC_EN	0	R/W	Subcode Processing Enable This bit should be set and cleared simultaneously with CROM_EN. It is automatically cleared when decoding is automatically stopped due to an abnormal condition or when CROM_STP = 1
6	CROM_EN	0	R/W	CD-ROM Decoding Enable When this bit is set to 1, CD-ROM decoding starts after detection of a valid sync code. When the bit is cleared to 0, decoding stops on completion of the processing for the sector currently being decoded. This bit is automatically cleared when the automatic decode-stopping function woks or when CROM_STP = 1.
5	CROM_STP	0	R/W	Forcible Stop of CD-ROM Decoding When this bit is set to 1, CD-ROM decoding is stopped immediately and the SUBC_EN and CROM_EN bits are automatically reset to 0. Before decoding can resume, this bit must be cleared to 0.
4 to 0	—	All 0	R/W	Reserved These bits are always read as 0.The write value should always be 0.

chanhvinh.com

26.3.2 Sync Code-Based Synchronization Control Register (CROMSY0)

The sync code-based synchronization control register (CROMSY0) selects the sync code maintenance function.

Bit:	7	6	5	4	3	2	1	0
	SY_AUT	SY_IEN	SY_DEN	-	-	-	-	-
Initial value:	1	0	0	0	1	0	0	1
R/W:	R/W	R/W	R/W	R/W	R/W	R/W	R/W	R/W

Bit	Bit Name	Initial Value	R/W	Description
7	SY_AUT	1	R/W	Automatic CD-ROM Sync Code Maintenance Mode When this bit is set to 1, automatic sync maintenance (insertion of sync codes) is applied to obtain the CD-ROM sync codes. While this bit is set, the settings of the SY_IEN and SY_DEN bits are invalid.
6	SY_IEN	0	R/W	Internal Sync Signal Enable Enables the internal sync signal that is produced by the counter in the CD-ROM decoder. When this bit is set while SY_AUT = 0, synchronization of the CD-ROM data is in interpolated mode, i.e. driven by the internal counter.
5	SY_DEN	0	R/W	Synchronization with External Sync Code Selects constant monitoring for the sync code in the input data and bases synchronization solely on detection of the code, regardless of the value of the internal counter. The setting of this bit is valid when SY_AUT = 0.
4	—	0	R/W	Reserved This bit is always read as 0. The write value should always be 0.
3	—	1	R/W	Reserved This bit is always read as 1. The write value should always be 1.

chanhvinh.com

Bit	Bit Name	Initial Value	R/W	Description
2, 1	—	All 0	R/W	Reserved These bits are always read as 0. The write value should always be 0.
0	—	1	R/W	Reserved This bit is always read as 1. The write value should always be 1.

Table 26.2 Register Settings for Sync Code Maintenance Function

SY_AUT	SY_IEN	SY_DEN	Operating Mode
1	—	—	Automatic sync maintenance mode
0	0	1	External sync mode
0	1	0	Interpolated sync mode
0	1	1	Interpolated sync plus external sync mode
0	0	0	Setting prohibited

26.3.3 Decoding Mode Control Register (CROMCTL0)

The decoding mode control register (CROMCTL0) enables/disables the various functions, selects criteria for mode or form determination, and specifies the sector type. The setting of this register becomes valid at the sector-to-sector transition

Bit:	7	6	5	4	3	2	1	0
	MD_DESC	-	MD_AUTO	MD_AUTOS1	MD_AUTOS2	MD_SEC[2:0]		
Initial value:	1	0	0	0	0	0	1	0
R/W:	R/W	R/W	R/W	R/W	R/W	R/W	R/W	R/W

Bit	Bit Name	Initial Value	R/W	Description
7	MD_DESC	1	R/W	Descrambling Function ON/OFF 0: Disables descrambling function 1: Enables descrambling function

chanhvinh.com

Bit	Bit Name	Initial Value	R/W	Description
6	—	0	R/W	Reserved This bit is always read as 0. The write value should always be 0.
5	MD_AUTO	0	R/W	Automatic Mode/Form Detection ON/OFF 0: OFF 1: ON Detectable formats are Mode 0, Mode 1, Mode 2 (non-XA), Mode 2 Form 1, and Mode 2 Form 2. If the mode and form cannot be detected, the sector is taken to be in the same mode and form as the previous sector. If the mode and form of the first sector after decoding starts is undetectable, the setting of the MD_SEC[2:0] bits is used as the initial value.
4	MD_ AUTOS1	0	R/W	Criteria for Mode Determination when MD_AUTO = 1 0: Mode determination is made only when the sync code is detected 1: Mode determination is always made The setting of this bit is valid only when the MD_AUTO bit is 1. If the mode cannot be determined, the mode of the previous sector is used. When this bit is cleared to 0, mode determination is made only when the sync code is detected for the sector.
3	MD_ AUTOS2	0	R/W	Criteria for Mode 2 Form Determination when MD_AUTO = 1 0: The sector is assumed to be non-XA if the two form code bytes in the subheader do not match 1: No determination of XA or non-XA for the sector. The first form byte is regarded as valid. However, the two form bytes are compared, and the result is reflected in a status bit. The setting of this bit is valid only when the MD_AUTO bit is 1.

chanhvinh.com

Bit	Bit Name	Initial Value	R/W	Description
2 to 0	MD_SEC [2:0]	010	R/W	Sector Type 000: Setting prohibited 001: Mode 0 010: Mode 1 011: Long (Mode 0, Mode 1, or Mode 2 with no EDC/ECC data) 100: Setting prohibited 101: Mode 2 Form 1 110: Mode 2 Form 2 111: Mode 2 with automatic form detection If the form cannot be determined when set to B'111, it is processed as Mode 2 not XA.

26.3.4 EDC/ECC Check Control Register (CROMCTL1)

The EDC/ECC check control register (CROMCTL1) controls EDC/ECC checking. The setting of this register becomes valid at the sector-to-sector transition

Bit:	7	6	5	4	3	2	1	0
	M2F2 EDC	MD_DEC[2:0]			-	-	MD_PQREP[1:0]	
Initial value:	1	1	0	1	0	0	0	1
R/W:	R/W	R/W	R/W	R/W	R/W	R/W	R/W	R/W

Bit	Bit Name	Initial Value	R/W	Description
7	M2F2EDC	1	R/W	For Mode 2 Form 2, disables the EDC function for sectors where all bits of the EDC are 0. When this bit set to 1 and all bits of the EDC for a Mode 2 Form 2 sector are 0, an IERR interrupt is not generated even if the result of EDC checking is ‘fail’.

chanhvinh.com

Bit	Bit Name	Initial Value	R/W	Description
6 to 4	MD_DEC [2:0]	101	R/W	EDC/ECC Checking Mode Select 000: No checking 001: EDC only 010: Q correction + EDC 011: P correction + EDC 100: QP correction + EDC 101: PQ correction + EDC 110: Setting prohibited 111: Setting prohibited
3, 2	—	All 0	R/W	Reserved These bits are always read as 0. The write value should always be 0.
1, 0	MD_ PQREP [1:0]	01	R/W	Number of Iterations of PQ or QP Correction Number of correction iterations when PQ- or QP-correction is specified by MD_DEC[2:0]. 00: Setting prohibited 01: One iteration 10: Two iterations 11: Three iterations

26.3.5 Automatic Decoding Stop Control Register (CROMCTL3)

The automatic decoding stop control register (CROMCTL3) is used to select abnormal conditions on which decoding will be automatically stopped. When decoding is stopped in response to any of the selected conditions, an IBUF interrupt is generated and the condition is indicated in the CBUFST1 register. The setting of this register becomes valid at the sector-to-sector transition

Bit:	7	6	5	4	3	2	1	0
	STP_ ECC	STP_ EDC	-	STP_ MD	STP_ MIN	-	-	-
Initial value:	0	0	0	0	0	0	0	0
R/W:	R/W	R/W	R/W	R/W	R/W	R/W	R/W	R/W

chanhvinh.com

Bit	Bit Name	Initial Value	R/W	Description
7	STP_ECC	0	R/W	When this bit is set to 1, decoding is stopped if an error is found to be not correctable by ECC correction.
6	STP_EDC	0	R/W	When this bit is set to 1, decoding is stopped if post-correction EDC checking indicates an error.
5	—	0	R/W	Reserved This bit is always read as 0. The write value should always be 0.
4	STP_MD	0	R/W	When this bit is set to 1, decoding is stopped if the sector has a mode or form setting that does not match those of the immediately preceding sector.
3	STP_MIN	0	R/W	When this bit is set to 1, decoding is stopped if a non-sequential minutes, seconds, or frames (1/75 second) value is encountered.
2 to 0	—	All 0	R/W	Reserved These bits are always read as 0. The write value should always be 0.

26.3.6 Decoding Option Setting Control Register (CROMCTL4)

The decoding option setting control register (CROMCTL4) enables/disables buffering control at link block detection, specifies the information indicated by the status register, and controls the ECC correction mode. The setting of this register becomes valid at the sector-to-sector transition

Bit:	7	6	5	4	3	2	1	0
	LINKOFF	LINK2	-	ER0SEL	NO_ECC	-	-	-
Initial value:	0	0	0	0	0	0	0	0
R/W:	R/W	R/W	R/W	R/W	R/W	R/W	R/W	R/W

chanhvinh.com

Bit	Bit Name	Initial Value	R/W	Description
7	LINKOFF	0	R/W	Buffering Control at Link Block Detection 0: ON 1: OFF When this bit is set to 1, buffering control is not performed when a link block is detected. The link block is processed as normal sectors. However, link-block detection processing does proceed, and the results are reflected in the values of bits 3 to 0 in the CROMST5 register.
6	LINK2	0	R/W	Link Block Detection Condition 0: The block is regarded as a link block when either run-out 1 or 2 and both run-in 3 and 4 have been detected. 1: The block is regarded as a link block when two out of run-out 1 and 2 and “link” have been detected. When this bit is set to 1, buffering control for link blocks is disabled (link blocks are processed as normal sectors). The condition for setting of the LINK_ON bit in CROMST5 is decoding of the link sector.
5	—	0	R/W	Reserved This bit is always read as 0. The write value should always be 0.
4	ER0SEL	0	R/W	CD-ROM Data-Related Status Register Setting Condition 0: Information is on the sector being decoded. 1: Information is on the latest sector that has been buffered. This condition affects the information given by bits 5 to 0 in the CROMST0 register, bits 7 to 1 in the CROMST4 and CROMST5 registers, and HEAD00 to HEAD02.
3	NO_ECC	0	R/W	ECC correction mode when the result of the EDC check before ECC correction was ‘pass’ When this bit is set to 1, ECC correction is not performed if the result of pre-correction EDC checking is a ‘pass’, regardless of the results of syndrome calculation.

chanhvinh.com

Bit	Bit Name	Initial Value	R/W	Description
2 to 0	—	All 0	R/W	Reserved These bits are always read as 0. The write value should always be 0.

26.3.7 HEAD20 to HEAD22 Representation Control Register (CROMCTL5)

The HEAD20 to HEAD22 representation control register (CROMCTL5) specifies the representation mode for HEAD20 to HEAD22.

Bit:	7	6	5	4	3	2	1	0
	-	-	-	-	-	-	-	MSF_LBA_SEL
Initial value:	0	0	0	0	0	0	0	0
R/W:	R/W	R/W	R/W	R/W	R/W	R/W	R/W	R/W

Bit	Bit Name	Initial Value	R/W	Description
7 to 1	—	All 0	R/W	Reserved These bits are always read as 0. The write value should always be 0.
0	MSF_LBA_SEL	0	R/W	HEAD20 to HEAD22 Representation Mode 0: Header MSF is represented in BCD (decimal) as is 1: Total sector number is represented in HEX (hexadecimal)

chanhvinh.com

26.3.8 Sync Code Status Register (CROMST0)

The sync code status register (CROMST0) indicates various status information in sync code maintenance modes

Bit:	7	6	5	4	3	2	1	0
	-	-	ST_SYIL	ST_SYNO	ST_BLKS	ST_BLKL	ST_SECS	ST_SECL
Initial value:	0	0	0	0	0	0	0	0
R/W:	R	R	R	R	R	R	R	R

Bit	Bit Name	Initial Value	R/W	Description
7, 6	—	All 0	R	Reserved These bits are always read as 0 and cannot be modified.
5	ST_SYIL	0	R	Indicates that a sync code was detected at a position where the value in the word counter (used to measure intervals between sync codes) was not correct, but the sync code was ignored and not taken into account in synchronization. This bit is only valid in automatic sync maintenance mode and interpolated sync mode.
4	ST_SYNO	0	R	Indicates that a sync code has not been detected despite the word counter having reached the final value, and synchronization has been continued with the aid of an interpolated sync code. This bit is only valid in automatic sync maintenance mode and interpolated sync mode.
3	ST_BLKS	0	R	Indicates that a sync code was detected at a position where the value in the word counter was not correct, and the sync code was used in synchronization. This bit is only valid in automatic sync maintenance mode and external sync mode.
2	ST_BLKL	0	R	Indicates that a sync code has not been detected despite the word counter having reached the final value, and the period of the sector has been prolonged. This bit is only valid in external sync mode.

chanhvinh.com

Bit	Bit Name	Initial Value	R/W	Description
1	ST_SECS	0	R	Indicates that a sector has been processed as a short sector with the aid of interpolated sync codes. If this bit is set to 1, stop decoding immediately and retry the procedure starting from the sector prior to the currently being decoded sector.
0	ST_SECL	0	R	Indicates that a sector has been processed as a long sector with the aid of interpolated sync codes. If this bit is set to 1, stop decoding immediately and retry the procedure starting from two sectors prior to the sector currently being decoded.

26.3.9 Post-ECC Header Error Status Register (CROMST1)

The post-ECC header error status register (CROMST1) indicates error status in the post-ECC header.

Bit:	7	6	5	4	3	2	1	0
	-	-	-	-	ER2_ HEAD0	ER2_ HEAD1	ER2_ HEAD2	ER2_ HEAD3
Initial value:	0	0	0	0	0	0	0	0
R/W:	R	R	R	R	R	R	R	R

Bit	Bit Name	Initial Value	R/W	Description
7 to 4	—	All 0	R	Reserved These bits are always read as 0 and cannot be modified.
3	ER2_ HEAD0	0	R	Indicates an error in the minutes field of the header after ECC correction.
2	ER2_ HEAD1	0	R	Indicates an error status in the seconds field of the header after ECC correction.
1	ER2_ HEAD2	0	R	Indicates an error in the frames (1/75 second) field of the header after ECC correction.
0	ER2_ HEAD3	0	R	Indicates an error in the mode field of the header after ECC correction.

chanhvinh.com

26.3.10 Post-ECC Subheader Error Status Register (CROMST3)

The post-ECC subheader error status register (CROMST3) indicates error status in the post-ECC subheader.

Bit:	7	6	5	4	3	2	1	0
	ER2_ SHEAD0	ER2_ SHEAD1	ER2_ SHEAD2	ER2_ SHEAD3	ER2_ SHEAD4	ER2_ HEAD5	ER2_ HEAD6	ER2_ HEAD7
Initial value:	0	0	0	0	0	0	0	0
R/W:	R	R	R	R	R	R	R	R

Bit	Bit Name	Initial Value	R/W	Description
7	ER2_ SHEAD0	0	R	Indicates that the subheader (file number) still has an error after ECC correction. Indicates the error of the SHEAD20 register.
6	ER2_ SHEAD1	0	R	Indicates that the subheader (channel number) still has an error after ECC correction. Indicates the error of the SHEAD21 register.
5	ER2_ SHEAD2	0	R	Indicates that the subheader (sub-mode) still has an error after ECC correction. Indicates the error of the SHEAD22 register.
4	ER2_ SHEAD3	0	R	Indicates that the subheader (data type) still has an error after ECC correction. Indicates the error of the SHEAD23 register.
3	ER2_ SHEAD4	0	R	Indicates that the subheader (file number) still has an error after ECC correction. Indicates the error of the SHEAD24 register.
2	ER2_ SHEAD5	0	R	Indicates that the subheader (channel number) still has an error after ECC correction. Indicates the error of the SHEAD25 register.
1	ER2_ SHEAD6	0	R	Indicates that the subheader (sub-mode) still has an error after ECC correction. Indicates the error of the SHEAD26 register.
0	ER2_ SHEAD7	0	R	Indicates that the subheader (data type) still has an error after ECC correction. Indicates the error of the SHEAD27 register.

chanhvinh.com

26.3.11 Header/Subheader Validity Check Status Register (CROMST4)

The header/subheader validity check status register (CROMST4) indicates errors relating to the automatic mode determination or form determination for Mode 2.

Bit:	7	6	5	4	3	2	1	0
	NG_MD	NG_ MDCMP1	NG_ MDCMP2	NG_ MDCMP3	NG_ MDCMP4	NG_ MDDEF	NG_ MDTIM1	NG_ MDTIM2
Initial value:	0	0	0	0	0	0	0	0
R/W:	R	R	R	R	R	R	R	R

Bit	Bit Name	Initial Value	R/W	Description
7	NG_MD	0	R	Indicates that the sector mode could not be determined according to the automatic mode determination criteria.
6	NG_ MDCMP1	0	R	Indicates a mismatch between the file number bytes (bytes 16 and 20) during the form determination for Mode 2.
5	NG_ MDCMP2	0	R	Indicates a mismatch between the channel number bytes (bytes 17 and 21) during the form determination for Mode 2.
4	NG_ MDCMP3	0	R	Indicates a mismatch between the sub-mode bytes (bytes 18 and 22) during the form determination for Mode 2.
3	NG_ MDCMP4	0	R	Indicates a mismatch between the data-type bytes (bytes 19 and 23) during the form determination for Mode 2.
2	NG_ MDDEF	0	R	Indicates that the mode and form differ from those of the previous sector.
1	NG_ MDTIM1	0	R	Indicates that the minutes, seconds, or frames (1/75 second) value is out of sequence. In the continuity check for the next and subsequent sectors, the updated values will be used.
0	NG_ MDTIM2	0	R	Indicates that the minutes, seconds, or frames (1/75 second) value was not a BCD value. Specifically, this bit means that any half-byte was beyond the range for BCD (i.e. was A to F), HEAD01 was greater than H'59, or HEAD02 was greater than H'74. In the continuity check for the next and subsequent sectors, interpolated values will be used.

chanhvinh.com

26.3.12 Mode Determination and Link Sector Detection Status Register (CROMST5)

The mode determination and link sector detection status register (CROMST5) indicates the result of automatic mode determination and link block detection.

Bit:	7	6	5	4	3	2	1	0
	ST_AMD[2:0]			ST_MDX	LINK_ON	LINK_ DET	LINK_ SDET	LINK_ OUT1
Initial value:	0	0	0	0	0	0	0	0
R/W:	R	R	R	R	R	R	R	R

Bit	Bit Name	Initial Value	R/W	Description
7 to 5	ST_AMD [2:0]	000	R	Result of Automatic Mode Determination These bits indicate the result of mode determination when the automatic mode determination function is used. 000: Automatic mode determination function is not used 001: Mode 0 010: Mode 1 011: — 100: Mode 2 not XA 101: Mode 2 Form 1 110: Mode 2 Form 2 111: —
4	ST_MDX	0	R	Indicates that, when the mode has been manually set rather than automatically determined, the mode setting disagrees with the mode as recognized by the logic. In this case, the manually set value takes priority.
3	LINK_ON	0	R	This bit is set to 1 when a link block was recognized in link block determination. For the criteria for link block determination, refer to the LINK2 bit in the CROMCTL4 register. When this bit is set to 1, buffering control is performed according to the setting of the CBUF_LINK bit in the CBUFCTL0 register.

chanhvinh.com

Bit	Bit Name	Initial Value	R/W	Description
2	LINK_DET	0	R	Indicates that a link block (run-out 1 to run-in 4) was detected. Since detection is based on the data before ECC correction, LINK_DET may also be set to 1 if data erroneously happens to contain the same code as a link block.
1	LINK_ SDET	0	R	Indicates that a link block was detected within seven sectors after the start of decoding.
0	LINK_ OUT1	0	R	Indicates that the sector after ECC correction has been identified as a run-out 1 sector. This bit is only valid when an IERR interrupt is not generated (i.e. when ECC correction was successful).

26.3.13 ECC/EDC Error Status Register (CROMST6)

The ECC/EDC error status register (CROMST6) indicates ECC processing error or EDC check error before/after ECC correction.

Bit:	7	6	5	4	3	2	1	0
	ST_ ERR	-	ST_ ECCABT	ST_ ECCNG	ST_ ECCP	ST_ ECCQ	ST_ EDC1	ST_ EDC2
Initial value:	0	0	0	0	0	0	0	0
R/W:	R	R	R	R	R	R	R	R

Bit	Bit Name	Initial Value	R/W	Description
7	ST_ERR	0	R	Indicates that the decoded block after ECC correction contains any error (even in a single byte).
6	—	0	R	Reserved This bit is always read as 0 and cannot be modified.
5	ST_ ECCABT	0	R	Indicates that ECC processing was discontinued. This bit is set to 1 when a transition from sector to sector occurs while ECC correction is in progress. This does not indicate a problem for ECC correction if the BUF_NG bit in the CBUFST2 register is 0 at the same time. Whether or not this is so depends on the timing of the sector transition.

chanhvinh.com

Bit	Bit Name	Initial Value	R/W	Description
4	ST_ ECCNG	0	R	Indicates that error correction was not possible. This bit is also set to 1 on detection of a short sector.
3	ST_ECCP	0	R	Indicates that P-parity errors were not corrected in ECC correction. This bit is only valid when synchronization is normal (the sector is neither short nor long). This bit is set to 1 when the result of syndrome calculation for P parity is non-0.
2	ST_ECCQ	0	R	Indicates that Q-parity errors were not corrected in ECC correction. This bit is only valid when synchronization is normal (the sector is neither short nor long). This bit is set to 1 when the result of syndrome calculation for Q parity is other than all 0s.
1	ST_EDC1	0	R	Indicates that the result of the EDC check before ECC correction was ‘fail’. This bit is also set to 1 if a short sector is encountered while EDC is enabled.
0	ST_EDC2	0	R	Indicates that the result of the EDC check after ECC correction was ‘fail’.

chanhvinh.com

26.3.14 Buffer Status Register (CBUFST0)

The buffer status register (CBUFST0) indicates that the system is searching for the first sector to be buffered, or that buffering is in progress.

Bit:	7	6	5	4	3	2	1	0
	BUF_REF	BUF_ACT	-	-	-	-	-	-
Initial value:	0	0	0	0	0	0	0	0
R/W:	R	R	R	R	R	R	R	R

Bit	Bit Name	Initial Value	R/W	Description
7	BUF_REF	0	R	Indicates that the search for the first sector to be buffered is in progress. This bit is only valid when the automatic buffering function is used (CBUF_AUT = 1).
6	BUF_ACT	0	R	Indicates that buffering is in progress.
5 to 0	—	All 0	R	Reserved These bits are always read as 0 and cannot be modified.

chanhvinh.com

26.3.15 Decoding Stoppage Source Status Register (CBUFST1)

The decoding stoppage source status register (CBUFST1) indicates that decoding/buffering has been stopped due to some errors.

A bit in this register can only be set when the corresponding bit in the CROMCTL3 register is set to 1.

Bit:	7	6	5	4	3	2	1	0
	BUF_ECC	BUF_EDC	-	BUF_MD	BUF_MIN	-	-	-
Initial value:	0	0	0	0	0	0	0	0
R/W:	R	R	R	R	R	R	R	R

Bit	Bit Name	Initial Value	R/W	Description
7	BUF_ECC	0	R	Indicates that decoding and buffering have been stopped because of an error that is not correctable by using the ECC.
6	BUF_EDC	0	R	Indicates that decoding and buffering have been stopped because the post-correction EDC check indicated an error.
5	—	0	R	Reserved This bit is always read as 0 and cannot be modified.
4	BUF_MD	0	R	Indicates that decoding and buffering have been stopped because the current sector is in a mode or form differing from that of the previous sectors.
3	BUF_MIN	0	R	Indicates that decoding and buffering have been stopped because a non-sequential minutes, seconds, or frames (1/75 second) value has been encountered.
2 to 0	—	All 0	R	Reserved These bits are always read as 0 and cannot be modified.

chanhvinh.com

26.3.16 Buffer Overflow Status Register (CBUFST2)

The buffer overflow status register (CBUFST2) indicates that a sector-to-sector transition occurred before data transfer to the buffer is completed.

Bit:	7	6	5	4	3	2	1	0
	BUF_NG	-	-	-	-	-	-	-
Initial value:	0	0	0	0	0	0	0	0
R/W:	R	R	R	R	R	R	R	R

Bit	Bit Name	Initial Value	R/W	Description
7	BUF_NG	0	R	Indicates that a sector-to-sector transition has occurred before the data transfer to the buffer is completed. This bit is set to 1 when the data of a third sector are input while data for the output stream from the CD-ROM decoder remains unread. No interrupt is generated. Once this bit has been set, its value will not recover unless it is reset by the LOGICRST bit in the ROMDECRST register.
6 to 0	—	All 0	R	Reserved These bits are always read as 0 and cannot be modified.

26.3.17 Pre-ECC Correction Header: Minutes Data Register (HEAD00)

The pre-ECC correction header: minutes data register (HEAD00) indicates the minutes value in the header before ECC correction.

Bit:	7	6	5	4	3	2	1	0
	HEAD00[7:0]							
Initial value:	0	0	0	0	0	0	0	0
R/W:	R	R	R	R	R	R	R	R

Bit	Bit Name	Initial Value	R/W	Description
7 to 0	HEAD00 [7:0]	All 0	R	Minutes Value in Header Before ECC Correction

chanhvinh.com

26.3.18 Pre-ECC Correction Header: Seconds Data Register (HEAD01)

The pre-ECC correction header: seconds data register (HEAD01) indicates the seconds value in the header before ECC correction.

Bit:	7	6	5	4	3	2	1	0
	HEAD01[7:0]							
Initial value:	0	0	0	0	0	0	0	0
R/W:	R	R	R	R	R	R	R	R

Bit	Bit Name	Initial Value	R/W	Description
7 to 0	HEAD01 [7:0]	All 0	R	Seconds Value in Header Before ECC Correction

26.3.19 Pre-ECC Correction Header: Frames (1/75 Second) Data Register (HEAD02)

The pre-ECC correction header: frames (1/75 second) data register (HEAD02) indicates the frames value (1 frame = 1/75 second) in the header before ECC correction.

Bit:	7	6	5	4	3	2	1	0
	HEAD02[7:0]							
Initial value:	0	0	0	0	0	0	0	0
R/W:	R	R	R	R	R	R	R	R

Bit	Bit Name	Initial Value	R/W	Description
7 to 0	HEAD02 [7:0]	All 0	R	Frames Value in Header Before ECC Correction

chanhvinh.com

26.3.20 Pre-ECC Correction Header: Mode Data Register (HEAD03)

The pre-ECC correction header: mode data register (HEAD03) indicates the mode value in the header before ECC correction.

Bit:	7	6	5	4	3	2	1	0
	HEAD03[7:0]							
Initial value:	0	0	0	0	0	0	0	0
R/W:	R	R	R	R	R	R	R	R

Bit	Bit Name	Initial Value	R/W	Description
7 to 0	HEAD03 [7:0]	All 0	R	Mode value in the header before ECC correction

26.3.21 Pre-ECC Correction Subheader: File Number (Byte 16) Data Register (SHEAD00)

The pre-ECC correction subheader: file number (byte 16) data register (SHEAD00) indicates the file number value in the subheader before ECC correction (byte 16).

Bit:	7	6	5	4	3	2	1	0
	SHEAD00[7:0]							
Initial value:	0	0	0	0	0	0	0	0
R/W:	R	R	R	R	R	R	R	R

Bit	Bit Name	Initial Value	R/W	Description
7 to 0	SHEAD00 [7:0]	All 0	R	Indicates file number value in the subheader before ECC correction (byte 16). For sectors not in Mode 2, this register contains the byte of data at the corresponding position.

chanhvinh.com

26.3.22 Pre-ECC Correction Subheader: Channel Number (Byte 17) Data Register (SHEAD01)

The pre-ECC correction subheader: channel number (byte 17) data register (SHEAD01) indicates the channel number value in the subheader before ECC correction (byte 17).

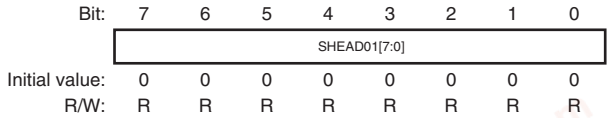

Bit	Bit Name	Initial Value	R/W	Description
7 to 0	SHEAD01 [7:0]	All 0	R	Indicate channel number value in the subheader before ECC correction (byte 17). For sectors not in Mode 2, this register contains the byte of data at the corresponding position.

26.3.23 Pre-ECC Correction Subheader: Sub-Mode (Byte 18) Data Register (SHEAD02)

The pre-ECC correction subheader: sub-mode (byte 18) data register (SHEAD02) indicates the sub-mode value in the subheader before ECC correction (byte 18).

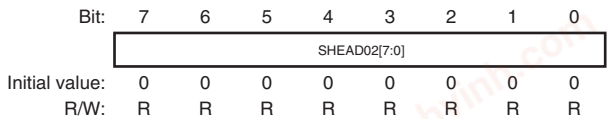

Bit	Bit Name	Initial Value	R/W	Description
7 to 0	SHEAD02 [7:0]	All 0	R	Indicate sub-mode value in the subheader before ECC correction (byte 18). For sectors not in Mode 2, this register contains the byte of data at the corresponding position.

chanhvinh.com

26.3.24 Pre-ECC Correction Subheader: Data Type (Byte 19) Data Register (SHEAD03)

The pre-ECC correction subheader: data type (byte 19) data register (SHEAD03) indicates the data type value in the subheader before ECC correction (byte 19).

Bit:	7	6	5	4	3	2	1	0
	SHEAD03[7:0]							
Initial value:	0	0	0	0	0	0	0	0
R/W:	R	R	R	R	R	R	R	R

Bit	Bit Name	Initial Value	R/W	Description
7 to 0	SHEAD03 [7:0]	All 0	R	Indicate data type value in the subheader before ECC correction (byte 19). For sectors not in Mode 2, this register contains the byte of data at the corresponding position.

26.3.25 Pre-ECC Correction Subheader: File Number (Byte 20) Data Register (SHEAD04)

The pre-ECC correction subheader: file number (byte 20) data register (SHEAD04) indicates the file number value in the subheader before ECC correction (byte 20).

Bit:	7	6	5	4	3	2	1	0
	SHEAD04[7:0]							
Initial value:	0	0	0	0	0	0	0	0
R/W:	R	R	R	R	R	R	R	R

Bit	Bit Name	Initial Value	R/W	Description
7 to 0	SHEAD04 [7:0]	All 0	R	Indicate file number value in the subheader before ECC correction (byte 20). For sectors not in Mode 2, this register contains the byte of data at the corresponding position.

chanhvinh.com

26.3.26 Pre-ECC Correction Subheader: Channel Number (Byte 21) Data Register (SHEAD05)

The pre-ECC correction subheader: channel number (byte 21) data register (SHEAD05) indicates the channel number value in the subheader before ECC correction (byte 21).

Bit:	7	6	5	4	3	2	1	0
	SHEAD05[7:0]							
Initial value:	0	0	0	0	0	0	0	0
R/W:	R	R	R	R	R	R	R	R

Bit	Bit Name	Initial Value	R/W	Description
7 to 0	SHEAD05 [7:0]	All 0	R	Indicate channel number value in the subheader before ECC correction (byte 21). For sectors not in Mode 2, this register contains the byte of data at the corresponding position.

26.3.27 Pre-ECC Correction Subheader: Sub-Mode (Byte 22) Data Register (SHEAD06)

The pre-ECC correction subheader: sub-mode (byte 22) data register (SHEAD06) indicates the sub-mode value in the subheader before ECC correction (byte 22).

Bit:	7	6	5	4	3	2	1	0
	SHEAD06[7:0]							
Initial value:	0	0	0	0	0	0	0	0
R/W:	R	R	R	R	R	R	R	R

Bit	Bit Name	Initial Value	R/W	Description
7 to 0	SHEAD06 [7:0]	All 0	R	Sub-Mode Value in Subheader Before ECC Correction (Byte 22) For sectors not in Mode 2, this register contains the byte of data at the corresponding position.

chanhvinh.com

26.3.28 Pre-ECC Correction Subheader: Data Type (Byte 23) Data Register (SHEAD07)

The pre-ECC correction subheader: data type (byte 23) data register (SHEAD07) indicates the data type value in the subheader before ECC correction (byte 23).

Bit:	7	6	5	4	3	2	1	0
	SHEAD07[7:0]							
Initial value:	0	0	0	0	0	0	0	0
R/W:	R	R	R	R	R	R	R	R

Bit	Bit Name	Initial Value	R/W	Description
7 to 0	SHEAD07 [7:0]	All 0	R	Data Type Value in Subheader Before ECC Correction (Byte 23) For sectors not in Mode 2, this register contains the byte of data at the corresponding position.

26.3.29 Post-ECC Correction Header: Minutes Data Register (HEAD20)

The post-ECC correction header: minutes data register (HEAD20) indicates the minutes value in the header after ECC correction.

Bit:	7	6	5	4	3	2	1	0
	HEAD20[7:0]							
Initial value:	0	0	0	0	0	0	0	0
R/W:	R	R	R	R	R	R	R	R

Bit	Bit Name	Initial Value	R/W	Description
7 to 0	HEAD20 [7:0]	All 0	R	Minutes Value in Header After ECC Correction When MSF_LBA_SEL = 1, this register indicates the first byte of the total number of sectors calculated from M, S, and F.

chanhvinh.com

26.3.30 Post-ECC Correction Header: Seconds Data Register (HEAD21)

The post-ECC correction header: seconds data register (HEAD21) indicates the seconds value in the header after ECC correction.

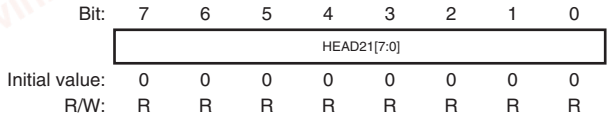

Bit	Bit Name	Initial Value	R/W	Description
7 to 0	HEAD21 [7:0]	All 0	R	Seconds Value in Header After ECC Correction When MSF_LBA_SEL = 1, this register indicates the second byte of the total number of sectors calculated from M, S, and F.

26.3.31 Post-ECC Correction Header: Frames (1/75 Second) Data Register (HEAD22)

The post-ECC correction header: frames (1/75 second) data register (HEAD22) indicates the frames value (1 frame = 1/75 seconds) in the header after ECC correction.

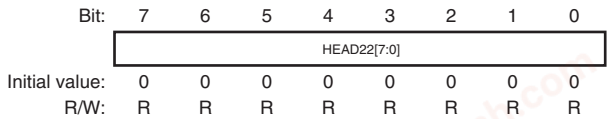

Bit	Bit Name	Initial Value	R/W	Description
7 to 0	HEAD22 [7:0]	All 0	R	Frames Value in Header After ECC Correction When MSF_LBA_SEL = 1, this register indicates the third byte of the total number of sectors calculated from M, S, and F.

chanhvinh.com

26.3.32 Post-ECC Correction Header: Mode Data Register (HEAD23)

The post-ECC correction header: mode data register (HEAD23) indicates the mode value in the header after ECC correction.

Bit:	7	6	5	4	3	2	1	0
	HEAD23[7:0]							
Initial value:	0	0	0	0	0	0	0	0
R/W:	R	R	R	R	R	R	R	R

Bit	Bit Name	Initial Value	R/W	Description
7 to 0	HEAD23 [7:0]	All 0	R	Mode Value in Header After ECC Correction

26.3.33 Post-ECC Correction Subheader: File Number (Byte 16) Data Register (SHEAD20)

The post-ECC correction subheader: file number (byte 16) data register (SHEAD20) indicates the file number value in the subheader after ECC correction (byte 16).

Bit:	7	6	5	4	3	2	1	0
	SHEAD20[7:0]							
Initial value:	0	0	0	0	0	0	0	0
R/W:	R	R	R	R	R	R	R	R

Bit	Bit Name	Initial Value	R/W	Description
7 to 0	SHEAD20 [7:0]	All 0	R	Indicate file number value in the subheader after ECC correction (byte 16).

chanhvinh.com

26.3.34 Post-ECC Correction Subheader: Channel Number (Byte 17) Data Register (SHEAD21)

The post-ECC correction subheader: channel number (byte 17) data register (SHEAD21) indicates the channel number value in the subheader after ECC correction (byte 17).

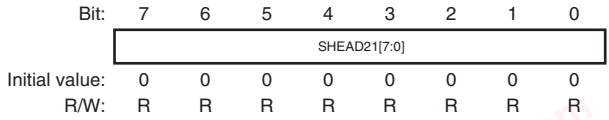

Bit	Bit Name	Initial Value	R/W	Description
7 to 0	SHEAD21 [7:0]	All 0	R	Indicate channel number value in the subheader after ECC correction (byte 17).

26.3.35 Post-ECC Correction Subheader: Sub-Mode (Byte 18) Data Register (SHEAD22)

The post-ECC correction subheader: sub-mode (byte 18) data register (SHEAD22) indicates the sub-mode value in the subheader after ECC correction (byte 18).

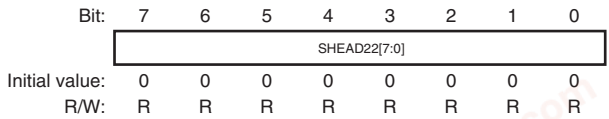

Bit	Bit Name	Initial Value	R/W	Description
7 to 0	SHEAD22 [7:0]	All 0	R	Indicates sub-mode value in the subheader after ECC correction (byte 18).

chanhvinh.com

26.3.36 Post-ECC Correction Subheader: Data Type (Byte 19) Data Register (SHEAD23)

The post-ECC correction subheader: data type (byte 19) data register (SHEAD23) indicates the data type value in the subheader after ECC correction (byte 19).

Bit:	7	6	5	4	3	2	1	0
	SHEAD23[7:0]							
Initial value:	0	0	0	0	0	0	0	0
R/W:	R	R	R	R	R	R	R	R

Bit	Bit Name	Initial Value	R/W	Description
7 to 0	SHEAD23 [7:0]	All 0	R	Indicate data type value in the subheader after ECC correction (byte 19).

26.3.37 Post-ECC Correction Subheader: File Number (Byte 20) Data Register (SHEAD24)

The post-ECC correction subheader: file number (byte 20) data register (SHEAD24) indicates the file number value in the subheader after ECC correction (byte 20).

Bit:	7	6	5	4	3	2	1	0
	SHEAD24[7:0]							
Initial value:	0	0	0	0	0	0	0	0
R/W:	R	R	R	R	R	R	R	R

Bit	Bit Name	Initial Value	R/W	Description
7 to 0	SHEAD24 [7:0]	All 0	R	Indicate file number value in the subheader after ECC correction (byte 20).

chanhvinh.com

26.3.38 Post-ECC Correction Subheader: Channel Number (Byte 21) Data Register (SHEAD25)

The post-ECC correction subheader: channel number (byte 21) data register (SHEAD25) indicates the channel number value in the subheader after ECC correction (byte 21).

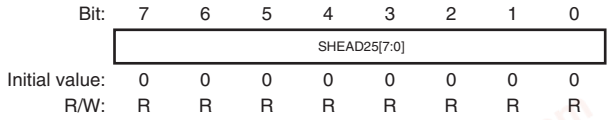

Bit	Bit Name	Initial Value	R/W	Description
7 to 0	SHEAD25 [7:0]	All 0	R	Indicate channel number value in the subheader after ECC correction (byte 21).

26.3.39 Post-ECC Correction Subheader: Sub-Mode (Byte 22) Data Register (SHEAD26)

The post-ECC correction subheader: sub-mode (byte 22) data register (SHEAD26) indicates the sub-mode value in the subheader after ECC correction (byte 22).

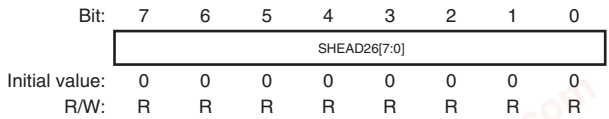

Bit	Bit Name	Initial Value	R/W	Description
7 to 0	SHEAD26 [7:0]	All 0	R	Indicate sub-mode value in the subheader after ECC correction (byte 22).

chanhvinh.com

26.3.40 Post-ECC Correction Subheader: Data Type (Byte 23) Data Register (SHEAD27)

The post-ECC correction subheader: data type (byte 23) data register (SHEAD27) indicates the data type value in the subheader after ECC correction (byte 23).

Bit:	7	6	5	4	3	2	1	0
	SHEAD27[7:0]							
Initial value:	0	0	0	0	0	0	0	0
R/W:	R	R	R	R	R	R	R	R

Bit	Bit Name	Initial Value	R/W	Description
7 to 0	SHEAD27 [7:0]	All 0	R	Data Type Value in Subheader After ECC Correction (byte 23)

26.3.41 Automatic Buffering Setting Control Register 0 (CBUFCTL0)

Bit:	7	6	5	4	3	2	1	0
	CBUF_ AUT	CBUF_ EN	CBUF_ LINK	CBUF_MD[1:0]		CBUF_ TS	CBUF_ Q	-
Initial value:	0	0	0	0	0	1	0	0
R/W:	R/W	R/W	R/W	R/W	R/W	R/W	R/W	R/W

Bit	Bit Name	Initial Value	R/W	Description
7	CBUF_ AUT	0	R/W	Automatic Buffering Function ON/OFF When this bit is to be set or cleared while CROM_EN = 1, CBUF_EN should also be set or cleared simultaneously. Otherwise, the validity of the status indications in CBUFST0, CBUFST1 and CBUFST2 cannot be guaranteed. 0: Automatic buffering is OFF 1: Automatic buffering is ON

chanhvinh.com

Bit	Bit Name	Initial Value	R/W	Description
6	CBUF_EN	0	R/W	Buffering to Buffer RAM Enable This bit turns on/off buffering in both automatic and manual buffering modes. In manual buffering mode, set this bit after generation of the ISEC interrupt. This bit is automatically reset when automatic buffering stops. 0: Buffering is OFF 1: Buffering is ON
5	CBUF_ LINK	0	R/W	Buffering Control on Link Block Detection 0: Allocates area for seven sectors 1: Data are buffered, skipping the link block
4, 3	CBUF_MD [1:0]	00	R/W	Start-sector detection mode when the automatic buffering function is in use 00: The header values for the previous and current sectors must be in sequence. 01: The header value detected in the current sector must be in sequence with the interpolated value. 10: A current sector with any header value is OK. 11: Start-sector detection is based on the interpolated value even if the current sector is not detected.
2	CBUF_TS	1	R/W	CBUFCTL1 to CBUFCTL3 Setting Mode 0: CBUFCTL1 to CBUFCTL3: BCD (in decimal) 1: Total number of sectors (in hexadecimal)
1	CBUF_Q	0	R/W	Q-channel code buffering data specification in the case of a CRC error in the Q-channel code 0: The values for the last sector for which the CRC returned a correct result are buffered. 1: The erroneous data is buffered as is. Note: Since subcodes are not input with this LSI, always set this bit to 1.
0	—	0	R/W	Reserved This bit is always read as 0.The write value should always be 0.

chanhvinh.com

26.3.42 Automatic Buffering Start Sector Setting: Minutes Control Register (CBUFCTL1)

The automatic buffering start sector setting: minutes control register (CBUFCTL1) indicates the minutes value in the header for the first sector to be buffered.

Bit:	7	6	5	4	3	2	1	0
	BS_MIN[7:0]							
Initial value:	0	0	0	0	0	0	0	0
R/W:	R/W	R/W	R/W	R/W	R/W	R/W	R/W	R/W

Bit	Bit Name	Initial Value	R/W	Description
7 to 0	BS_MIN [7:0]	All 0	R/W	Indicate setting of the minutes value in the header for the first sector to be buffered.

26.3.43 Automatic Buffering Start Sector Setting: Seconds Control Register (CBUFCTL2)

The automatic buffering start sector setting: seconds control register (CBUFCTL2) indicates the seconds value in the header for the first sector to be buffered.

Bit:	7	6	5	4	3	2	1	0
	BS_SEC[7:0]							
Initial value:	0	0	0	0	0	0	0	0
R/W:	R/W	R/W	R/W	R/W	R/W	R/W	R/W	R/W

Bit	Bit Name	Initial Value	R/W	Description
7 to 0	BS_SEC [7:0]	All 0	R/W	Indicate setting of the seconds value in the header for the first sector to be buffered.

chanhvinh.com

26.3.44 Automatic Buffering Start Sector Setting: Frames Control Register (CBUFCTL3)

The automatic buffering start sector setting: frames control register (CBUFCTL3) indicates the frames (1 frame = 1/75 second) value in the header for the first sector to be buffered

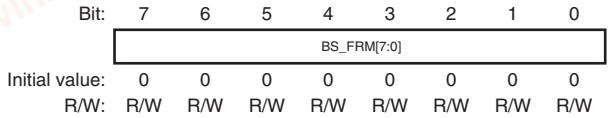

Bit	Bit Name	Initial Value	R/W	Description
7 to 0	BS_FRM [7:0]	All 0	R/W	Indicate setting of the frames (1/75 second) value in the header for the first sector to be buffered.

26.3.45 ISY Interrupt Source Mask Control Register (CROMST0M)

The ISY interrupt source mask control register (CROMST0M) masks the ISY interrupt sources specified by the bits in CROMST0.

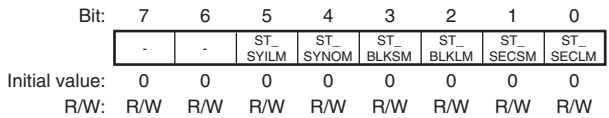

Bit	Bit Name	Initial Value	R/W	Description
7, 6	—	All 0	R/W	Reserved These bits are always read as 0.The write value should always be 0.
5	ST_SYILM	0	R/W	ISY interrupt ST_SYIL (bit 5 in the CROMST0 register) source mask
4	ST_ SYNOM	0	R/W	ISY interrupt ST_SYNO (bit 4 in the CROMST0 register) source mask
3	ST_ BLKSM	0	R/W	ISY interrupt ST_BLKS (bit 3 in the CROMST0 register) source mask

chanhvinh.com

Bit	Bit Name	Initial Value	R/W	Description
2	ST_BLKLM	0	R/W	ISY interrupt ST_BLKL (bit 2 in the CROMST0 register) source mask
1	ST_ SECSM	0	R/W	ISY interrupt ST_SECS (bit 1 in the CROMST0 register) source mask
0	ST_ SECLM	0	R/W	ISY interrupt ST_SECL (bit 0 in the CROMST0 register) source mask

26.3.46 CD-ROM Decoder Reset Control Register (ROMDECRST)

The CD-ROM decoder reset control register (ROMDECRST) resets the random logic of the CD-ROM decoder and clears the RAM in the CD-ROM decoder.

Bit:	7	6	5	4	3	2	1	0
	LOGI CRST	RAM RST	-	-	-	-	-	-
Initial value:	0	0	0	0	0	0	0	0
R/W:	R/W	R/W	R/W	R/W	R/W	R/W	R/W	R/W

Bit	Bit Name	Initial Value	R/W	Description
7	LOGICRST	0	R/W	CD-ROM Decoder Random Logic Reset Signal A reset signal is output while this bit is set to 1.
6	RAMRST	0	R/W	CD-ROM Decoder RAM Clearing Signal Refer to the RAMCLRST bit in the RSTSTAT register to confirm that RAM clearing is complete.
5 to 0	—	All 0	R/W	Reserved These bits are always read as 0.The write value should always be 0.

Note: Before setting LOGICRST to 1, make sure that the RAMRST bit is cleared to 0 and then write B'10000000 to this register.

chanhvinh.com

26.3.47 CD-ROM Decoder Reset Status Register (RSTSTAT)

The CD-ROM decoder reset status register (RSTSTAT) indicates that the RAM in the CD-ROM decoder has been cleared.

Bit:	7	6	5	4	3	2	1	0
	RAM CLRST	-	-	-	-	-	-	-
Initial value:	0	0	0	0	0	0	0	0
R/W:	R	R	R	R	R	R	R	R

Bit	Bit Name	Initial Value	R/W	Description
7	RAMCLRST	0	R	This bit is set to 1 on completion of RAM clearing after the RAMRST bit in ROMDECRST is set to 1. The bit is cleared by writing a 0 to the RAMRST bit.
6 to 0	—	All 0	R	Reserved These bits are always read as 0 and cannot be modified.

26.3.48 Serial Sound Interface Data Control Register (SSI)

The serial sound interface data control register (SSI) provides various settings related to the data stream. For the operation corresponding to the setting of this register, refer to section 26.4.1, Endian Conversion for Data in the Input Stream.

Bit:	7	6	5	4	3	2	1	0
	BYTEND	BITEND	BUFEND0[1:0]		BUFEND1[1:0]		-	-
Initial value:	0	0	0	1	1	0	0	0
R/W:	R/W	R/W	R/W	R/W	R/W	R/W	R/W	R/W

Bit	Bit Name	Initial Value	R/W	Description
7	BYTEND	0	R/W	Specifies the endian of input data from the serial sound interface. When this bit is set to 1, byte 0 and byte 1 in STRMDIN0 are swapped. This is the same for STRMDIN2.

chanhvinh.com

Bit	Bit Name	Initial Value	R/W	Description
6	BITEND	0	R/W	Specifies treatment of the bit order of the input data from the serial sound interface. When this bit is set to 1, the bits within each byte are rearranged to place them in reverse order, bit 0 → bit 7 to bit 7 → bit 0.
5, 4	BUFEND0 [1:0]	01	R/W	These bits select whether to change the order of 16-bit units of data transferred from the serial sound interface or suppress the stream data. In the serial sound interface, either “padding mode” or “non-padding mode” is selectable. In non-padding mode, each 32 bits of data transferred from the serial sound interface are CD-ROM data. Since the CD-ROM decoder has two 16-bit input data registers, the order of the 16-bit data can be swapped within the 32 bits. On the other hand, in padding mode each 32 bits of data transferred from the serial sound interface includes padding. Since the padding is without meaning, it should be kept out of the input stream to the decoder. This suppression can be specified by the setting of this register. The CD-ROM decoder handles data as a stream of 16-bit data, and this register controls which 16-bit portion of each 32 bits of data transferred from the serial sound interface should be input first. 00: The 16 bits of stream data that would otherwise be processed first is discarded. 01: The higher-order 16 bits of each 32 bits of data received from the serial sound interface are placed first in the stream to the decoder. 10: The lower-order 16 bits of each 32 bits of data received from the serial sound interface are placed first in the stream to the decoder. 11: Setting prohibited

chanhvinh.com

Bit	Bit Name	Initial Value	R/W	Description
3, 2	BUFEND1 [1:0]	10	R/W	These bits select whether to change the order of 16-bit units of data transferred from the serial sound interface or suppress the stream data. In the serial sound interface, either “padding mode” or “non-padding mode” is selectable. In non-padding mode, each 32 bits of data transferred from the serial sound interface are CD-ROM data. Since the CD-ROM decoder has two 16-bit input data registers, the order of the 16-bit data can be swapped within the 32 bits. On the other hand, in padding mode each 32 bits of data transferred from the serial sound interface includes padding. Since the padding is without meaning, it should be kept out of the input stream to the decoder. This suppression can be specified by the setting of this register. The CD-ROM decoder handles data as a stream of 16-bit data, and this register controls which 16-bit portion of each 32 bits of data transferred from the serial sound interface should be input second. 00: The 16 bits of stream data that would otherwise be processed second is discarded. 01: The higher-order 16 bits of each 32 bits of data received from the serial sound interface are placed second in the stream to the decoder. 10: The higher-order 16 bits of each 32 bits of data received from the serial sound interface are placed second in the stream to the decoder. 11: Setting prohibited
1, 0	—	All 0	R/W	Reserved These bits are always read as 0. The write value should always be 0.

chanhvinh.com

26.3.49 Interrupt Flag Register (INTHOLD)

The interrupt flag register (INTHOLD) consists of various interrupt flags.

Bit:	7	6	5	4	3	2	1	0
	ISEC	ITARG	ISY	IERR	IBUF	IREADY	-	-
Initial value:	0	0	0	0	0	0	0	0
R/W:	R/W	R/W	R/W	R/W	R/W	R/W	R/W	R/W

Bit	Bit Name	Initial Value	R/W	Description
7	ISEC	0	R/W	ISEC Interrupt Flag Writing 0 to this bit is only possible after 1 has been read from it.
6	ITARG	0	R/W	ITARG Interrupt Flag Writing 0 to this bit is only possible after 1 has been read from it.
5	ISY	0	R/W	ISY Interrupt Flag Writing 0 to this bit is only possible after 1 has been read from it.
4	IERR	0	R/W	IERR Interrupt Flag Writing 0 to this bit is only possible after 1 has been read from it.
3	IBUF	0	R/W	IBUF Interrupt Flag Writing 0 to this bit is only possible after 1 has been read from it.
2	IREADY	0	R/W	IREADY Interrupt Flag Writing 0 to this bit is only possible after 1 has been read from it.
1, 0	—	All 0	R/W	Reserved These bits are always read as 0. The write value should always be 0.

chanhvinh.com

26.3.50 Interrupt Source Mask Control Register (INHINT)

The interrupt source mask control register (INHINT) controls masking of various interrupt requests in the CD-ROM decoder.

Bit:	7	6	5	4	3	2	1	0
	INH ISEC	INH ITARG	INH ISY	INH IERR	INH IBUF	INH IREADY	PREINH REQDM	PREINH IREADY
Initial value:	0	0	0	0	0	0	0	0
R/W:	R/W	R/W	R/W	R/W	R/W	R/W	R/W	R/W

Bit	Bit Name	Initial Value	R/W	Description
7	INHISEC	0	R/W	ISEC Interrupt Mask When set to 1, inhibits ISEC interrupt requests
6	INHITARG	0	R/W	ITARG Interrupt Mask When set to 1, inhibits ITARG interrupt requests
5	INHISY	0	R/W	ISY Interrupt Mask When set to 1, inhibits ISY interrupt requests
4	INHIERR	0	R/W	IERR Interrupt Mask When set to 1, inhibits IERR interrupt requests
3	INHIBUF	0	R/W	IBUF Interrupt Mask When set to 1, inhibits IBUF interrupt requests
2	INHIREADY	0	R/W	IREADY Interrupt Mask When set to 1, inhibits IREADY interrupt requests
1	PREINH REQDM	0	R/W	Inhibits setting of the DMA-transfer-request interrupt source flag for the output data stream. When this bit is set to 1, the DMA-transfer-request interrupt source is not retained.
0	PREINH IREADY	0	R/W	Inhibits setting of the IREADY interrupt flag. When this bit is set to 1, the IREADY interrupt source not retained.

chanhvinh.com

26.3.51 CD-ROM Decoder Stream Data Input Register (STRMDIN0)

The CD-ROM decoder stream data input register (STRDMIN0) holds the higher 2 bytes (from MSB) of the 4 bytes of data that is to be input to the CD-ROM decoder.

Bit:	15	14	13	12	11	10	9	8	7	6	5	4	3	2	1	0
	STRMDIN[31:16]															
Initial value:	0	0	0	0	0	0	0	0	0	0	0	0	0	0	0	0
R/W:	R/W	R/W	R/W	R/W	R/W	R/W	R/W	R/W	R/W	R/W	R/W	R/W	R/W	R/W	R/W	R/W

Bit	Bit Name	Initial Value	R/W	Description
15 to 0	STRMDIN [31:16]	All 0	R/W	Indicate the higher 2 bytes (from MSB) of the 4-bytes of data that is to be input to the CD-ROM decoder. The CD-ROM decoder has a 4-byte wide data window as a data input register to handle the data input to this register as a stream data. The amount of data for one sector is 2352 bytes.

26.3.52 CD-ROM Decoder Stream Data Input Register (STRMDIN2)

The CD-ROM decoder stream data input register (STRDMIN2) holds the lower 2 bytes (from LSB) of the 4 bytes of data that is to be input to the CD-ROM decoder.

Bit:	15	14	13	12	11	10	9	8	7	6	5	4	3	2	1	0
	STRMDIN[15:0]															
Initial value:	0	0	0	0	0	0	0	0	0	0	0	0	0	0	0	0
R/W:	R/W	R/W	R/W	R/W	R/W	R/W	R/W	R/W	R/W	R/W	R/W	R/W	R/W	R/W	R/W	R/W

Bit	Bit Name	Initial Value	R/W	Description
15 to 0	STRMDIN [15:0]	All 0	R/W	Indicate the lower 2 bytes (from LSB) of the 4-bytes of data that is to be input to the CD-ROM decoder. The CD-ROM decoder has a 4-byte wide data window as a data input register to handle the data input to this register as a stream data. The amount of data for one sector is 2352 bytes.

chanhvinh.com

26.3.53 CD-ROM Decoder Stream Data Output Register (STRMDOUT0)

The CD-ROM decoder stream data output register (STRMDOUT0) holds 2 bytes that is to be output from the CD-ROM decoder.

Bit:	15	14	13	12	11	10	9	8	7	6	5	4	3	2	1	0
	STRMDOUT[15:0]															
Initial value:	0	0	0	0	0	0	0	0	0	0	0	0	0	0	0	0
R/W:	R	R	R	R	R	R	R	R	R	R	R	R	R	R	R	R

Bit	Bit Name	Initial Value	R/W	Description
15 to 0	STRMDOUT [15:0]	H'0000	R	Indicate 2 bytes that are to be output from the CD-ROM decoder. The CD-ROM decoder has a 2-byte wide data window or set of registers for the output of decoded data. Every time the relevant register is accessed, further data of access size are output sequentially in the output format that is separately defined. The amount of data for one sector is 2768 bytes. Always read 2768 bytes.

chanhvinh.com

26.4 Operation

26.4.1 Endian Conversion for Data in the Input Stream

Stream data must be input to the core of the CD-ROM decoder in order according to the CD-ROM data format specifications. In some systems, however, the order of the data from the serial sound interface may have to be changed or the data will have been padded before transfer. To cope with this, the stream data input control section is capable of swapping the order of the data and preventing the input of padding data to the core of the CD-ROM decoder. These functions are controlled through the serial sound interface data control register (SSI).

Figure 26.6 shows a case where the upper and lower 16 bits of the data, consisting of padding data plus the first 2 bytes of sync code, that is, H'000000FF, are swapped (H'00FF0000) and input to the CD-ROM decoder as the stream data.

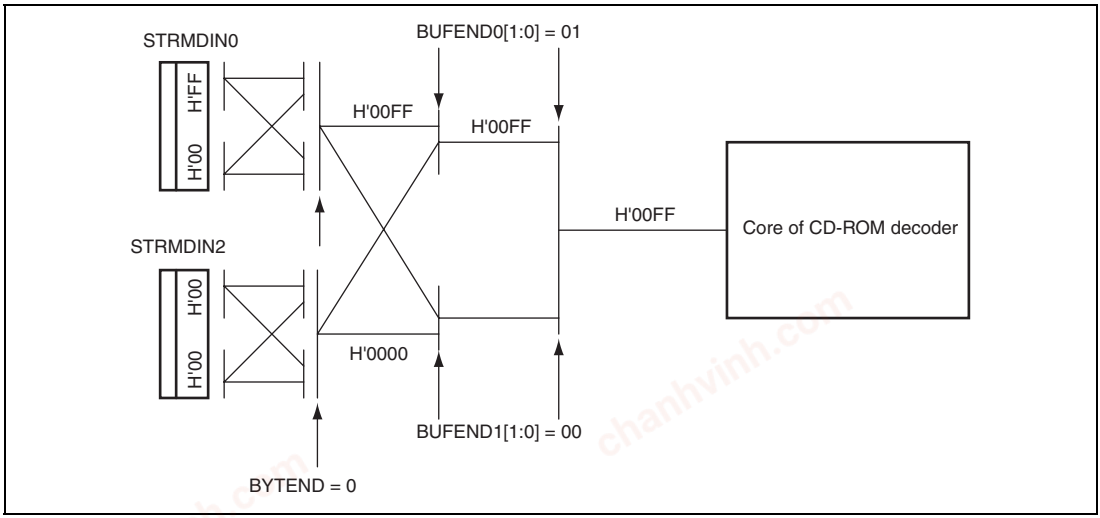

Figure 26.6 Example of Padded Stream Data Control by the SSI Register

chanhvinh.com

Figure 26.7 shows a case of input stream data that has no padding (H'12345678). The upper and lower 16 bits of data are swapped (H'56781234) for input to the CD-ROM decoder.

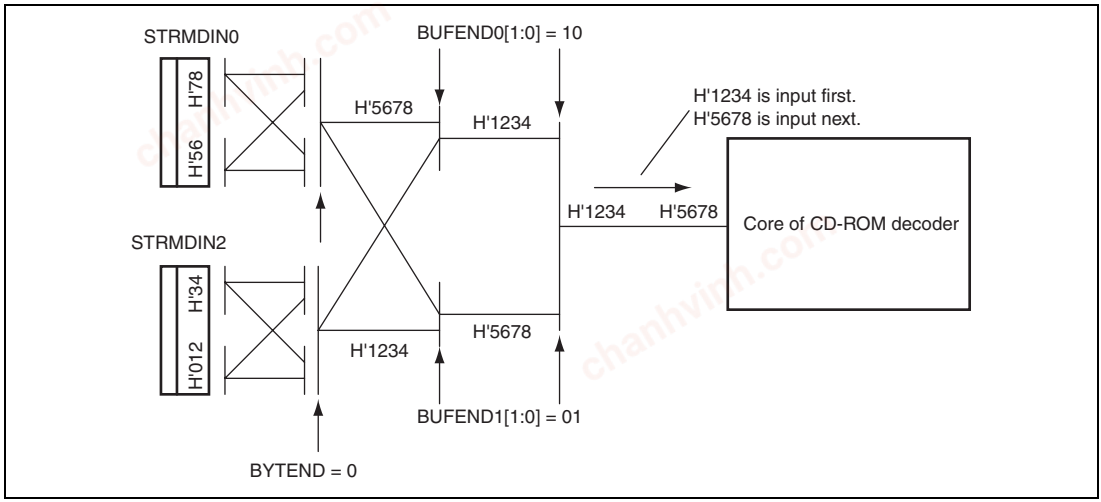

Figure 26.7 Example of Non-Padded Stream Data Control by the SSI Register

26.4.2 Sync Code Maintenance Function

Each sector of CD-ROM data consists of 2352 bytes starting with H'00FFFFFFFFFFFFFFFFFFFF00 (sync code). However, a scratch on the disc or some other factor might lead to erroneous recognition of the sync code sequence at the wrong time. Conversely, a sync code might not be detected at a point where it should be detected. As a solution to these problems, the CD-ROM decoder of this LSI has a sync-code maintenance function, which operates to ignore sync codes detected at abnormal times and maintain the appearance of the sync code at the expected times when it is not actually detected on the disc.

The operating modes of the sync-code maintenance function are listed below. For details on the settings, refer to section 26.3.2, Sync Code-Based Synchronization Control Register (CROMSY0), and table 26.2.

- Automatic sync maintenance mode
- External sync mode
- Interpolated sync mode
- Interpolated sync plus external sync mode

chanhvinh.com

(1) Automatic Sync Maintenance Mode

In automatic sync maintenance mode, the sync code is ignored if detected within the one-sector (2352-byte) period. Furthermore, if a sync code is not detected at the point where a next sector should start, sync code maintenance is applied. If synchronization timing has changed, re-synchronization is performed at the point where a sync code is detected within 2352 bytes after the change.

Therefore, this mode is effective in rejecting abnormal sync patterns and following changes in synchronization timing. Note, however, that this mode cannot achieve synchronization with the first sector after a change to the synchronization timing.

Figure 26.8 shows operation in the case of normal sync-code detection, figure 26.9 shows a case where a sync code is detected before a current one-sector period has elapsed, and figure 26.10 shows the case where the actual sync code is only detected some time after a full one-sector period has elapsed.

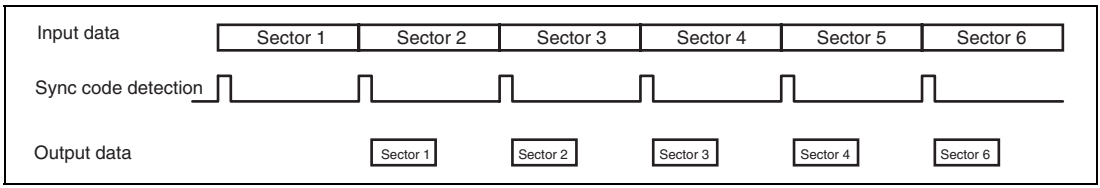

Figure 26.8 Operation in Automatic Sync Maintenance Mode (Normal Timing)

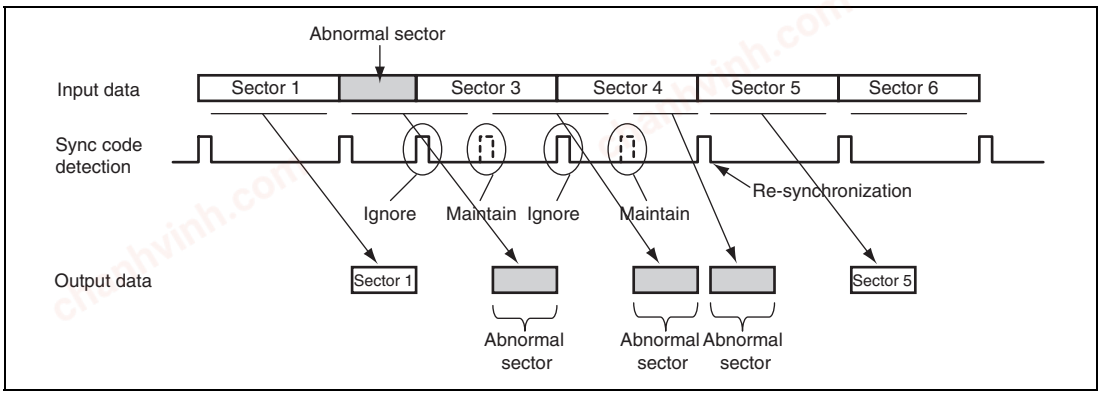

Figure 26.9 Operation in Automatic Sync Maintenance Mode (When an Abnormally Short Sector is Encountered)

chanhvinh.com

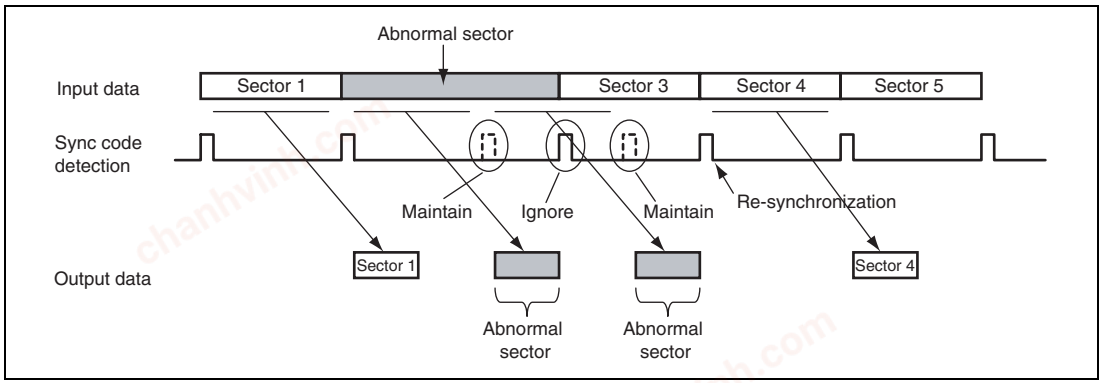

Figure 26.10 Operation in Automatic Sync Maintenance Mode (When an Abnormally Long Sector is Encountered)

(2) External Sync Mode

In external sync mode, synchronization is always based on the sync codes in the incoming data. Even if the next sync code is not detected at the 2352nd byte, decoding does not proceed until the next sync code is detected.

Accordingly, this mode is effective in that it strictly follows the external synchronization timing. Note, however, that decoding will not be performed normally when the sync-code pattern is input with abnormal timing.

Figure 26.11 shows the operation in external sync mode.

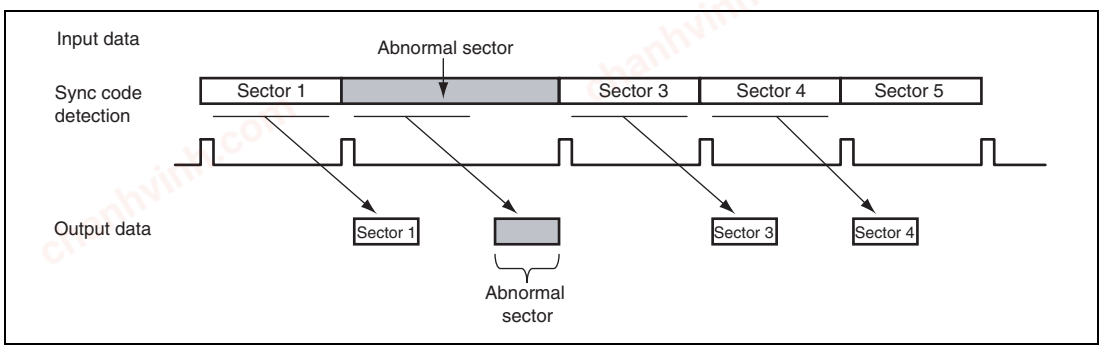

Figure 26.11 Operation in External Sync Mode

chanhvinh.com

(3) Interpolated Sync Mode

In interpolated sync mode, synchronization is always driven by the internal counter after a sync code pattern has been detected at the start of decoding. Accordingly, this mode is effective when the sync patterns have been damaged.

However, decoding becomes incorrect after a change to the synchronization timing, since the change in timing is not followed.

Figure 26.12 shows the operation in interpolated sync mode.

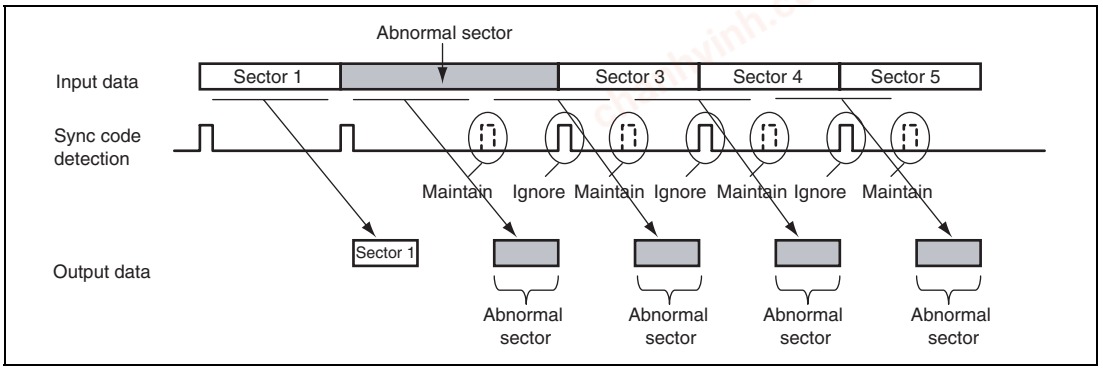

Figure 26.12 Operation in Interpolated Sync Mode

chanhvinh.com

(4) Interpolated Sync Plus External Sync Mode

In interpolated sync plus external sync mode, synchronization is based on the detected sync code patterns as long as they are present, and if a sync pattern is not detected at the 2352nd byte, the sync code maintenance is applied. Synchronization in this mode is more quickly responsive to changes in synchronization timing than synchronization in the automatic sync maintenance mode.

However, decoding still becomes incorrect when a sync pattern is input with abnormal timing.

Figures 26.13 and 26.14 show the operation in interpolated sync plus external sync mode in the cases of abnormally short and long sectors, respectively.

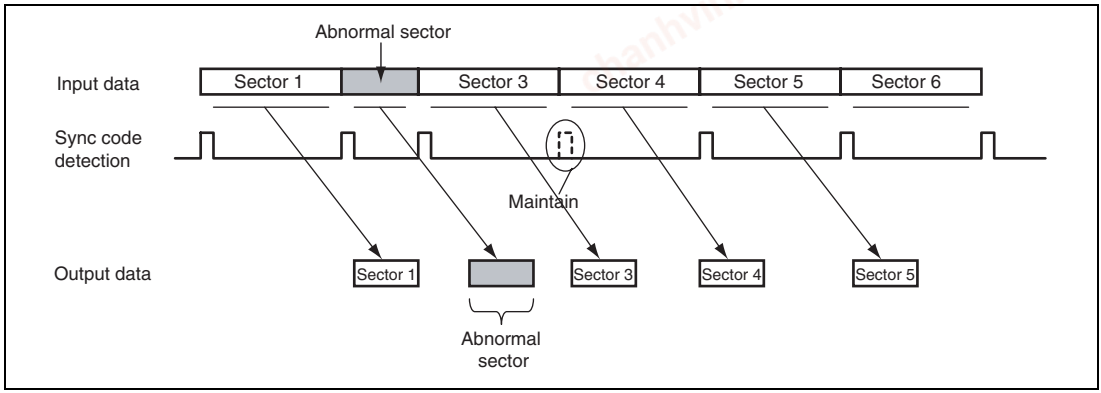

Figure 26.13 Operation in Interpolated Sync Plus External Sync Mode (When an Abnormally Short Sector is Encountered)

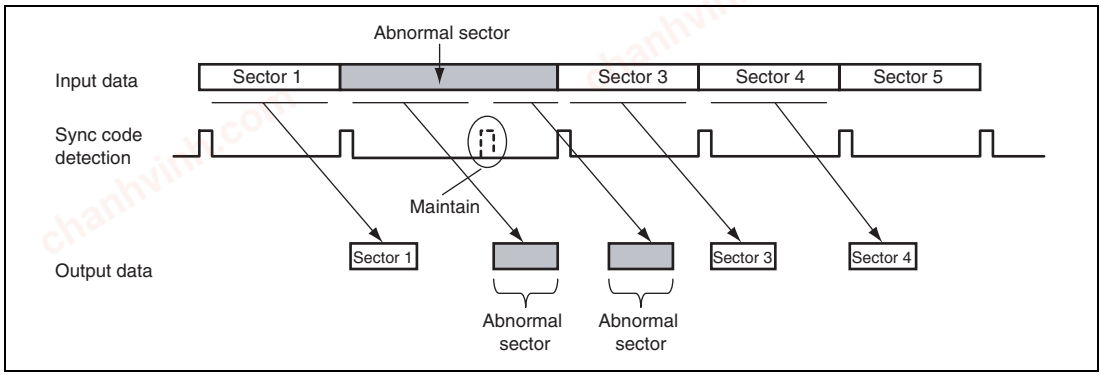

Figure 26.14 Operation in Interpolated Sync Plus External Sync Mode (When an Abnormally Long Sector is Encountered)

chanhvinh.com

26.4.3 Error Correction

The CD-ROM decoder handles data in the formats containing information relevant to error correction, including the EDC, P parity, and Q parity. The CD-ROM decoder includes the following functions for use in error correction.

- Syndrome calculation
- ECC correction
- EDC checking

(1) Syndrome Calculation

After the data of a sector in Mode 1 or Form 1 of Mode 2 has been input, the ECC is used in correction if any error is detected (the result of syndrome calculation is non-zero). After correction, the results of syndrome operation for the corrected data are output to bits ST_ECCP (P parity) and ST_ECCQ (Q parity) in the CROMST6 register, respectively.

(2) ECC correction and EDC Checking

For CD-ROM format data that contains EDC, P-parity, and Q-parity fields, the CD-ROM decoder performs EDC checking and ECC correction. Supported correction modes are P correction, Q correction, PQ correction (P correction followed by Q correction), and QP correction (Q correction followed by P correction). In PQ and QP correction modes, up to three iterations of correction are possible (the number of iterations is limited by the playback speed).

The EDC check is performed twice, before and after correction.

The mode of ECC correction and EDC checking is specified by bits MD_DEC[2:0] in the CROMCTL1 register. When the PQ or QP correction mode is selected, the number of iterations is specified by bits MD_PQREP[1:0] in the CROMCTL1 register.

When the automatic mode/form detection function is in use, the sector mode determines whether or not ECC correction and EDC checking can be performed. For sectors in Mode 0 and Mode 2 (non-XA), which include neither parity bits nor EDC, ECC correction and EDC checking are not performed. For sectors in Form 2 of Mode 2, ECC correction is not performed.

(a) ECC Correction

When ECC correction is in use and an error in a sector is identified as non-correctable, the CD-ROM decoder generates an IERR interrupt and sets the ST_ECCNG bit of the CROMST6 register to 1. The CD-ROM detector also sets this bit to 1 on detecting a short sector.

chanhvinh.com

While the NO_ECC bit of the CROMCTL4 register is set to 1, a ‘pass’ result in pre-correction EDC checking makes the CD-ROM decoder skip ECC correction, regardless of the results of the syndrome operation.

(b) EDC Checking

When EDC checking is in use, checking is in line with the specified or detected sector mode and form, depending on whether or not automatic sector mode and form detection is selected.

The results of EDC checking before and after correction are reflected in the ST_EDC1 and ST_EDC2 bits of the CROMST6 register, respectively. If EDC checking after ECC correction indicates that an error remains, an IERR interrupt is generated.

26.4.4 Automatic Decoding Stop Function

Decoding can be stopped automatically in response to an error during the decoding of CD-ROM data.

The possible conditions for automatically stopping the decoding process are listed below. The applicable conditions are specified in the CROMCTL3 register.

- An error is found to be not correctable by ECC correction.
- Post-correction EDC checking indicates that an error remains.
- A change of the sector mode or form.
- A non-sequential MSF (minutes, seconds, frames (1/75 second)) value.

When automatic stopping is set up and any of the above conditions is encountered in a certain sector, the decoding is stopped after the results of decoding for that sector have been output.

After decoding has been stopped in response to a condition specified in the CROMCTL3 register, the condition can be identified by reading the CBUFST1 register.

The CD-ROM decoder has buffer space for two sectors. If input of the data stream continues and the output stream of data is not read, the CD-ROM decoder stops at the point where the data of a third sector starts to be input. At this time, the BUF_NG bit in the CBUFST2 register is set to 1, but no interrupt is generated. Once the BUF_NG bit in the CBUFST2 register has been set to 1, recovery can only be accomplished by using the LOGICRST bit in the ROMDECRST register to reset the CD-ROM decoder function. When the LOGICRST bit in the ROMDECRST register is set to 1, a reset signal is output and any registers in which settings have been made are cleared to their initial values.

chanhvinh.com

26.4.5 Buffering Format

Figure 26.15 shows the format of the output data stream produced by CD-ROM decoding.

A 2-byte-wide window register STRMDOUT0 is provided for the output. When this window register is accessed after decoding of a CD-ROM sector has finished, the bytes of data are output in order from the sync code.

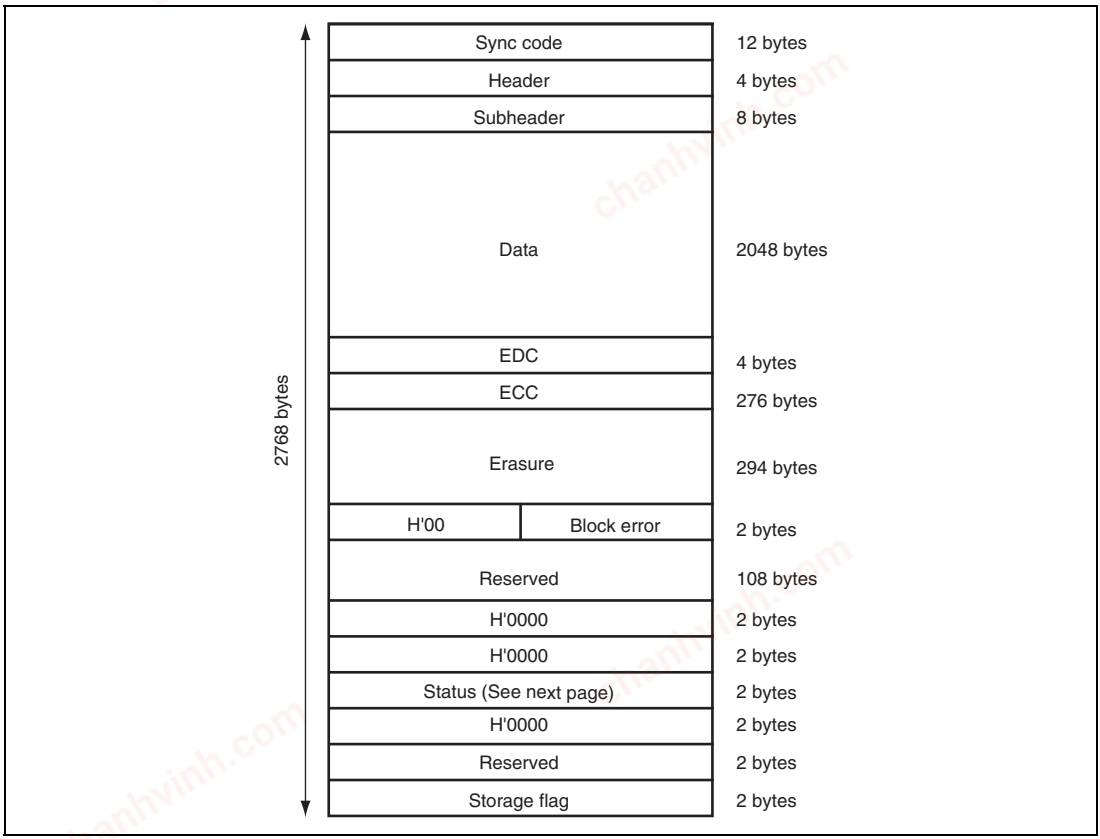

Figure 26.15 Output Data Stream Format

chanhvinh.com

The meanings of bits in the two-byte status field shown in figure 26.15 are given below. The values of the non-assigned bits are undefined.

Status															
15	**14**	**13**	**12**	**11**	**10**	**9**	**8**	**7**	**6**	**5**	**4**	**3**	**2**	**1**	**0**
PERR	QERR	EDCE	—	—	—	—	—	SD	SY		FM[2:0]		HD	—	—

[Legend]

PERR: Indicates that a P-parity error remains.

QERR: Indicates that a Q-parity error remains.

EDCE: Indicates that a remaining error was detected in post-correction EDC checking.

SD: Indicates that a short sector was encountered

SY: Indicates that a sync code was interpolated.

FM: Indicates the data format

001: Mode 0

010: Mode 1

011: Long (format with no EDC and ECC)

100: Mode 2 (non-XA)

101: Mode 2 Form 1

110: Mode 2 Form 2

HD: Header continuity (minutes, seconds, and frames (1/75) are non-sequential)

The value of the storage flag field in figure 26.15 is incremented every time the data for one sector are output. The value starts at H'0000 and wraps back around to H'0000 after incrementation reaches H'FFFF. Note that the upper byte and lower byte in the storage flag are swapped.

chanhvinh.com

26.4.6 Target-Sector Buffering Function

In the CD-ROM decoder, the sector for output can be designated in two ways: automatic buffering, where the CD-ROM decoder itself detects the presence of target sectors, and manual buffering, where the target sector for output is designated by software and the software also recognizes the sectors buffered in the CD-ROM decoder.

The following describes the procedures for setting the registers in the CD-ROM decoder to set up automatic or manual buffering.

(1) Setting Up Automatic Buffering

Figure 26.16 shows an example of setting up the automatic buffering. Set the relevant CD-ROM decoder registers and start input of the data stream; the CD-ROM decoder then detects the target sector and starts the output of the stream data.

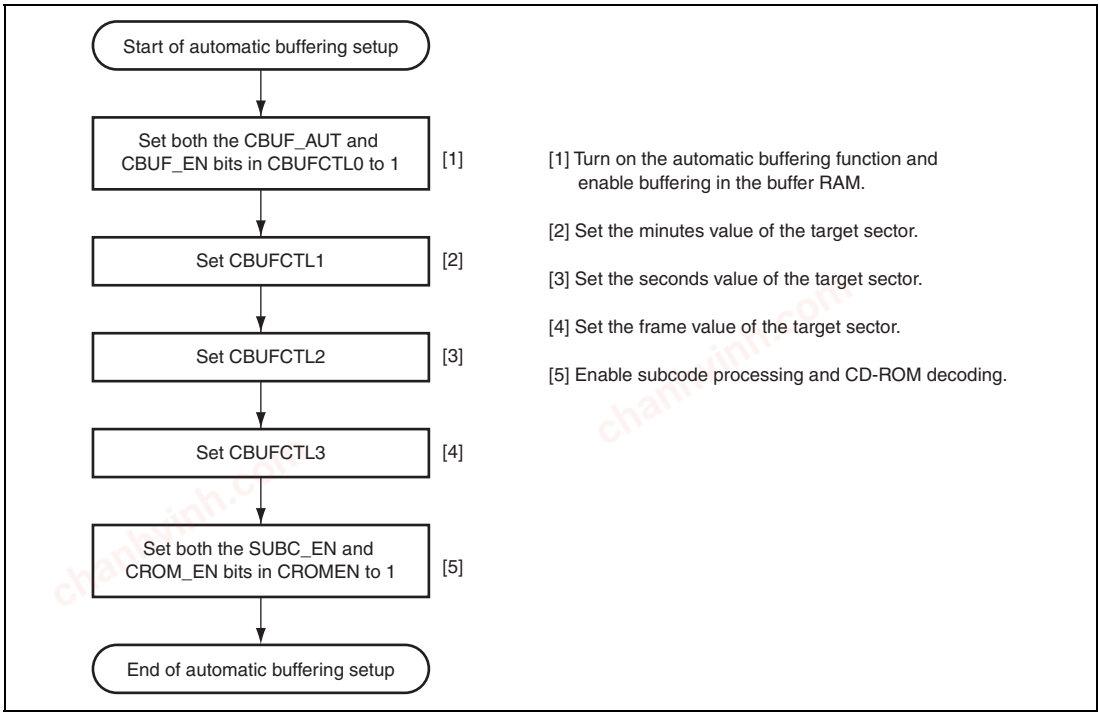

Figure 26.16 Example of Setting Up Automatic Buffering

chanhvinh.com

(2) Setting Up Manual Buffering

Figure 26.17 shows an example of setting up manual buffering. Each time an ISEC interrupt is generated, the software checks whether or not the sector is the target sector and starts buffering when the target sector is found.

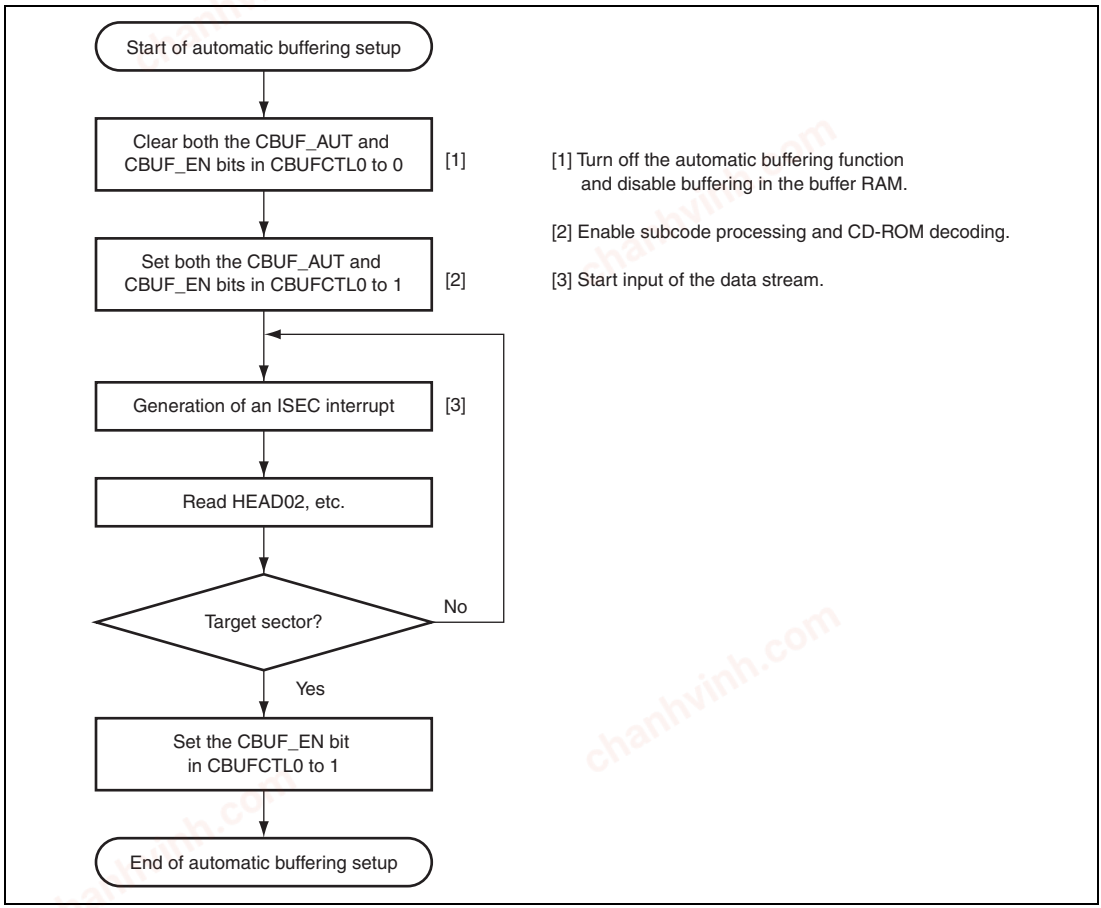

Figure 26.17 Example of Setting Up Manual Buffering

chanhvinh.com

26.5 Interrupt Sources

26.5.1 Interrupt and DMA Transfer Request Signals

Table 26.3 lists the interrupt signals and DMA transfer request signal generated by the CD-ROM decoder, along with the meanings and the modules to which the signals are connected.

Table 26.3 Interrupt and DMA Transfer Request Signals

Name	Condition	Connected To
ISEC	Transitions from sector to sector	Interrupt controller
ITARG	Access to a CD-ROM sector that is not the expected target sector	Interrupt controller
ISY	A sync code from the CD-ROM with abnormal timing	Interrupt controller
IERR	An error that was not correctable by ECC correction or an error indicated by EDC checking after ECC correction	Interrupt controller
IBUF	State changes in data transfer to the buffer	Interrupt controller
IREADY	Request for data transfer to the buffer for CD-ROM	Interrupt controller
DMA transfer request	Request for data transfer to the buffer for CD-ROM	Direct memory access controller

(1) ISEC Interrupt

This interrupt is generated when the sync code indicates a transition from sector to sector.

(2) ITARG Interrupt

This interrupt is generated when the stream data transferred from the CD-DSP is not the data of the target sector. The CD-ROM decoder checks the time data in the subcode. In correct operation, data transfer is expected to start slightly before the target sector. An ITARG interrupt is generated in the following cases.

- When data of a sector preceding the target sector by quite a few sectors have been transferred
- When data of a sector that comes after the target sector have been transferred

For the generation of this interrupt, ITARG is detected from the subcode. However, this interrupt has no meaning in this LSI because CD-ROM data are transferred from the serial sound interface.

chanhvinh.com

(3) ISY Interrupt

This interrupt can be generated in the following cases.

- When a sync code was detected at a position where the value in the word counter (counter for checking sync code intervals) was not correct and the sync code was ignored
- When a sync code has not been detected although the word counter has reached the final value and a sync code has been interpolated (for sync maintenance)
- When a sync code was detected at a position where the value in the word counter (counter for checking sync code intervals) was not correct and the sync code was used in resynchronization
- When a sync code has not been detected although the word counter has reached the final value, so the period taken up by the sector has been prolonged
- When the sector has been processed as a short sector with the aid of interpolated sync codes
- When the sector has been processed as a long sector with the aid of interpolated sync codes

(4) IERR Interrupt

This interrupt is generated in the following cases.

- When ECC correction was incapable of correcting an error
- When ECC correction was OK but the subsequent EDC check indicated an error

(5) IBUF Interrupt

This interrupt is generated when the following transitions occur.

- Data transfer to the buffer → Data transfer complete (searching for data for the next transfer)
- Data for transfer to the buffer are being searched for → Data transfer started

(6) IREADY Interrupt

This interrupt is generated when decoding of data for one sector is completed. This interrupt should be used to start the CPU buffering stream data for output to SDRAM.

(7) DMA Transfer Request

The source of direct memory access controller activation is the same as that of IREADY. An interrupt request is generated when output stream data for one sector becomes ready, and after the 2768 bytes of data shown in figure 26.15 have been transferred, the request signal is negated once. This is because a certain amount of time is required before the output data for the next sector is ready, so the transfer request from the direct memory access controller should be turned off between transfers.

chanhvinh.com

26.5.2 Timing of Status Registers Updates

The status information registers of the CD-ROM decoder are updated on each ISEC interrupt. The sector for which information is reflected in the status registers is selected by the ER0SEL bit of the CROMCTL4 register.

26.6 Usage Notes

26.6.1 Stopping and Resuming Buffering Alone during Decoding

When the data of the output stream are being not read out but operation of the CD-ROM decoder has continued until the buffers are full, the BUF_NG bit in the CBUFST2 register is set to 1; after that, the CD-ROM decoder becomes incapable of operation.

To stop buffering alone, clear the CBUF_EN bit in the CBUFCTL0 register to 0. If the automatic buffering function is in use, clear the CBUF_AUT in the CBUFCTL0 register to 0 at the same time. In this case, the sectors currently in the buffers must be read out.

To resume automatic buffering, set the CBUF_AUT and CBUF_EN bits in the CBUFCTL0 register at the same time.

26.6.2 When CROMST0 Status Register Bits are Set

1. When the ST_SECS bit in the CROMST0 register becomes set, stop decoding immediately and retry from one sector before the sector that was being decoded.
2. When the ST_SECL bit in the CROMST0 register becomes set, stop decoding immediately and retry from two sectors before the sector that was being decoded.

chanhvinh.com

26.6.3 Link Blocks

The CD-ROM decoder uses the header information before ECC correction to detect link blocks. Accordingly, an input data stream that contains an error may be erroneously detected as a link block. To prevent this, the following measures should be implemented in software.

- During buffering (BUF_ACT = 1 in the CBUFST0 register), check the LINK_OUT1 bit in the CROMST5 register on each ISEC interrupt. If it is set to 1, check to see if an IERR interrupt has also occurred; if an IERR interrupt has not occurred, save the MFS values from the HEAD20 to HEAD23 registers. If an IERR interrupt has occurred, do not save the MSF values.
- Perform the following processing for seven sectors (indicated by ISEC being generated seven times) after finding that the LINK_OUT1 bit has been set to 1.

  In either of cases 1 and 2 below,

  1. LINK_ON = 1 (in the CROMST5 register) is confirmed at each ISEC interrupt, and LINK_ON = 1 is detected again within the subsequent two-sector period
  2. LINK_ON = 1 was not detected at any ISEC interrupt

  Forcibly stop decoding, set the CROMSY0 register to place the decoder in external sync mode, and retry decoding by specifying the MSF value stored above + 7 as the MSF value for the target sector. The start sector address will be the address where RUN_OUT is stored + 7 when CBUF_LINK = 0, and the address where RUN_OUT is stored when CBUF_LINK = 1.

26.6.4 Stopping and Resuming CD-DSP Operation

When stopping and resuming the stream data input to the CD-ROM decoder, note that the input data stream does not stop immediately before a sync code and that the CD-ROM decoder may recognize the data as incorrect when the input stream is resumed. This happens because the system holds a combination of the data up to the point where input was stopped and data that is input from the point of resumption. Take care on this point when stopping and resuming input.

26.6.5 Note on Clearing the IREADY Flag

To clear the IREADY flag to 0 in interrupt processing etc., be sure to read one sector of data (2768 bytes) beforehand. If the IREADY flag is cleared to 0 before reading of one sector of data is complete, decoding of the subsequent sectors will not be possible. For recovery from this situation, write 1 to the LOGICRST bit in the CD-ROM decoder reset control register (ROMDECRST), and then clear the bit to 0.

chanhvinh.com

26.6.6 Note on Stream Data Transfer (1)

When reading of the stream data is slower than writing of the stream data, the buffer of the CD-ROM decoder will overflow. This causes the CD-ROM decoder to be abnormally stopped. Caution is required in writing and reading of the stream data. Sample combinations of stream data transfer settings are shown below.

Table 26.4 Sample Combinations of Stream Data Transfer Settings

Stream Input	Stream Output
LW/cycle-stealing transfer by direct memory access controller (without padding)	(1) 16-byte/cycle-stealing transfer by direct memory access controller (16 bytes*) (2) Burst transfer by direct memory access controller (16 bytes*, longword, word)
LW/cycle-stealing transfer by direct memory access controller (with padding)	(1) Cycle-stealing transfer by direct memory access controller (16 bytes*, longword) (2) Burst transfer by direct memory access controller (16 bytes*, longword, word)
LW write by CPU	(1) Cycle-stealing transfer by direct memory access controller (16 bytes*, longword, word) (2) Burst transfer by direct memory access controller (16 bytes*, longword, word)

Note: * Set bit 25 in the DMA channel control register (CHCR_n) to 1, as well as making the regular settings for 16-byte transfer.

26.6.7 Note on Stream Data Transfer (2)

When reading the stream data, be sure to use either the direct memory access controller or the CPU. If both the direct memory access controller and the CPU are used for reading, the stream data may not be recognized as being in the CD-ROM format.

chanhvinh.com

Section 27 A/D Converter

This LSI includes a 10-bit successive-approximation A/D converter allowing selection of up to eight analog input channels.

27.1 Features

- Resolution: 10 bits
- Input channels: six channels in the SH7268 Group and eight channels in the SH7269 Group
- Minimum conversion time: 6.0 μs per channel
- Absolute accuracy: ±5 LSB
- Operating modes: Three
  - Single mode: A/D conversion on one channel
  - Multi mode: A/D conversion on one to four channels or on one to eight channels (six channels in the SH7268 Group)
  - Scan mode: Continuous A/D conversion on one to four channels or on one to eight channels (six channels in the SH7268 Group)
- Data registers: Eight

  Conversion results are held in a 16-bit data register for each channel
- Sample-and-hold function
- A/D conversion start methods: Three
  - Software
  - Conversion start trigger from the multi-function timer pulse unit 2
  - External trigger signal
- Interrupt source

  An A/D conversion end interrupt (ADI) request can be generated on completion of A/D conversion.
- Module standby mode can be set

chanhvinh.com

Figure 27.1 shows a block diagram of the A/D converter.

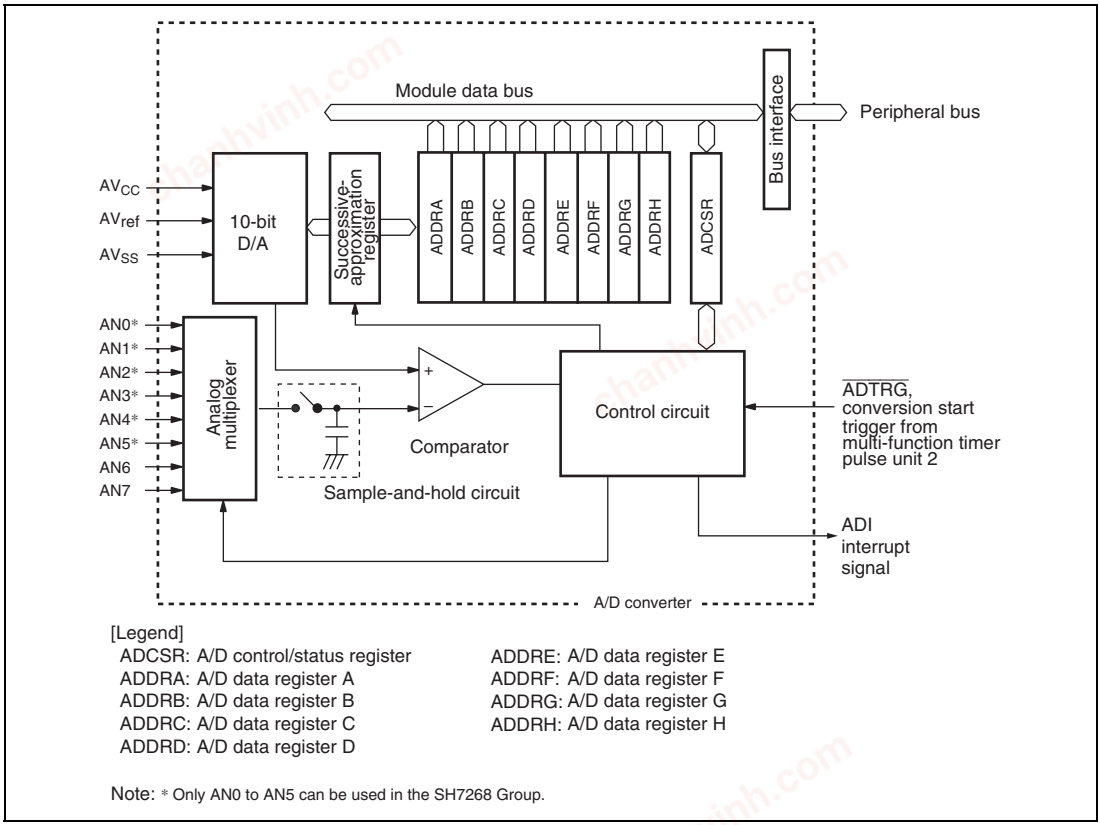

Figure 27.1 Block Diagram of A/D Converter

chanhvinh.com

27.2 Input/Output Pins

Table 27.1 shows the A/D converter pins.

Table 27.1 Pin Configuration

Pin Name	Symbol	I/O	Function
Analog power supply pin	AVcc	Input	Analog power supply pin
Analog ground pin	AVss	Input	Analog ground pin and A/D conversion reference ground
Analog reference voltage pin	AVref	Input	A/D converter reference voltage pin
Analog input pin 0*	AN0	Input	Analog input
Analog input pin 1*	AN1	Input	
Analog input pin 2*	AN2	Input	
Analog input pin 3*	AN3	Input	
Analog input pin 4*	AN4	Input	
Analog input pin 5*	AN5	Input	
Analog input pin 6	AN6	Input	
Analog input pin 7	AN7	Input	
A/D external trigger input pin	$\overline{\text{ADTRG}}$	Input	External trigger input to start A/D conversion

Note: * Only analog input pins 0 to 5 (AN0 to AN5) can be used in the SH7268 Group.

chanhvinh.com

27.3 Register Descriptions

The A/D converter has the following registers.

Table 27.2 Register Configuration

Register Name	Abbreviation	R/W	Initial Value	Address	Access Size
A/D data register A	ADDRA	R	H'0000	H'E8005800	16
A/D data register B	ADDRB	R	H'0000	H'E8005802	16
A/D data register C	ADDRC	R	H'0000	H'E8005804	16
A/D data register D	ADDRD	R	H'0000	H'E8005806	16
A/D data register E	ADDRE	R	H'0000	H'E8005808	16
A/D data register F	ADDRF	R	H'0000	H'E800580A	16
A/D data register G	ADDRG	R	H'0000	H'E800580C	16
A/D data register H	ADDRH	R	H'0000	H'E800580E	16
A/D control/status register	ADCSR	R/W	H'0000	H'E8005820	16

chanhvinh.com

27.3.1 A/D Data Registers A to H (ADDRA to ADDRH)

The sixteen A/D data registers, ADDRA to ADDRH, are 16-bit read-only registers that store the results of A/D conversion.

An A/D conversion produces 10-bit data, which is transferred for storage into the ADDR corresponding to the selected channel. The 10 bits of the result are stored in the upper bits (bits 15 to 6) of ADDR. Bits 5 to 0 of ADDR are reserved bits that are always read as 0.

Access to ADDR in 8-bit units is prohibited. ADDR must always be accessed in 16-bit units.

Table 27.3 indicates the pairings of analog input channels and ADDR.

Bit:	15	14	13	12	11	10	9	8	7	6	5	4	3	2	1	0
											-	-	-	-	-	-
Initial value:	0	0	0	0	0	0	0	0	0	0	0	0	0	0	0	0
R/W:	R	R	R	R	R	R	R	R	R	R	R	R	R	R	R	R

Bit	Bit Name	Initial Value	R/W	Description
15 to 6		All 0	R	Bit data (10 bits)
5 to 0	—	All 0	R	Reserved These bits are always read as 0. The write value should always be 0.

Table 27.3 Analog Input Channels and ADDR

Analog Input Channel	A/D Data Register where Conversion Result is Stored
AN0*	ADDRA
AN1*	ADDRB
AN2*	ADDRC
AN3*	ADDRD
AN4*	ADDRE
AN5*	ADDRF
AN6	ADDRG
AN7	ADDRH

Note: * Only AN0 to AN5 can be used in the SH7268 Group.

chanhvinh.com

27.3.2 A/D Control/Status Register (ADCSR)

ADCSR is a 16-bit readable/writable register that selects the mode, controls the A/D converter, and enables or disables starting of A/D conversion by external trigger input.

Bit:	15	14	13	12	11	10	9	8	7	6	5	4	3	2	1	0
	ADF	ADIE	ADST	TRGS[3:0]				CKS[2:0]			MDS[2:0]			CH[2:0]		
Initial value:	0	0	0	0	0	0	0	0	0	0	0	0	0	0	0	0
R/W:	R/(W)*1	R/W	R/W	R/W	R/W	R/W	R/W	R/W	R/W	R/W	R/W	R/W	R/W	R/W	R/W	R/W

Note: *1 Only 0 can be written to clear the flag after 1 is read.

Bit	Bit Name	Initial Value	R/W	Description
15	ADF	0	R/(W)*1	A/D End Flag Status flag indicating the end of A/D conversion. [Clearing conditions] • Cleared by reading ADF while ADF = 1, then writing 0 to ADF • Cleared when the direct memory access controller is activated by ADI interrupt and ADDR is read [Setting conditions] • A/D conversion ends in single mode • A/D conversion ends for the selected channels in multi mode • A/D conversion ends for the selected channels in scan mode
14	ADIE	0	R/W	A/D Interrupt Enable Enables or disables the interrupt (ADI) requested at the end of A/D conversion. Set the ADIE bit while A/D conversion is not being made. 0: A/D end interrupt request (ADI) is disabled 1: A/D end interrupt request (ADI) is enabled

chanhvinh.com

Bit	Bit Name	Initial Value	R/W	Description
13	ADST	0	R/W	A/D Start Starts or stops A/D conversion. This bit remains set to 1 during A/D conversion. 0: A/D conversion is stopped 1: Single mode: A/D conversion starts. This bit is automatically cleared to 0 when A/D conversion ends on the selected channel. Multi mode: A/D conversion starts. This bit is automatically cleared to 0 when A/D conversion is completed cycling through the selected channels. Scan mode: A/D conversion starts. A/D conversion is continuously performed until this bit is cleared to 0 by software, by a power-on reset as well as by a transition to deep standby mode, software standby mode or module standby mode.
12 to 9	TRGS[3:0]	0000	R/W	Timer Trigger Select These bits enable or disable starting of A/D conversion by a trigger signal. 0000: Start of A/D conversion by external trigger input is disabled 0001: A/D conversion is started by conversion trigger TRGAN from the multi-function timer pulse unit 2 0010: A/D conversion is started by conversion trigger TRG0N from the multi-function timer pulse unit 2 0011: A/D conversion is started by conversion trigger TRG4AN from the multi-function timer pulse unit 2 0100: A/D conversion is started by conversion trigger TRG4BN from the multi-function timer pulse unit 2 1001: A/D conversion is started by $\overline{\text{ADTRG}}$ Other than above: Setting prohibited

chanhvinh.com

Bit	Bit Name	Initial Value	R/W	Description
8 to 6	CKS[2:0]	000	R/W	Clock Select These bits select the A/D conversion time.*2 Set the A/D conversion time while A/D conversion is halted (ADST = 0). 000: Conversion time = 412 t_{cyc} (maximum) 001: Conversion time = 480 t_{cyc} (maximum) 010: Conversion time = 548 t_{cyc} (maximum) 011, 100, 101, 110, 111: Setting prohibited
5 to 3	MDS[2:0]	000	R/W	Multi-scan Mode These bits select the operating mode for A/D conversion. 0xx: Single mode 100: Multi mode: A/D conversion on 1 to 4 channels 101: Multi mode: A/D conversion on 1 to 8 channels 110: Scan mode: A/D conversion on 1 to 4 channels 111: Scan mode: A/D conversion on 1 to 8 channels

chanhvinh.com

Bit	Bit Name	Initial Value	R/W	Description
2 to 0	CH[2:0]	000	R/W	Channel Select These bits and the MDS bits in ADCSR select the analog input channels.

MDS = 0xx	MDS = 100 or MDS = 110	MDS = 101 or MDS = 111
000: AN0	000: AN0	000: AN0
001: AN1	001: AN0, AN1	001: AN0, AN1
010: AN2	010: AN0 to AN2	010: AN0 to AN2
011: AN3	011: AN0 to AN3	011: AN0 to AN3
100: AN4	100: AN4	100: AN0 to AN4
101: AN5	101: AN4, AN5	101: AN0 to AN5
110: AN6*3	110: AN4 to AN6*3	110: AN0 to AN6*3
111: AN7*3	111: AN4 to AN7*3	111: AN0 to AN7*3

[Legend]

x: Don't care

Notes: 1. Only 0 can be written to clear the flag after 1 is read.

2. Set the A/D conversion time to minimum or more values to meet the absolute accuracy of the A/D conversion characteristics.

3. Settings prohibited in the SH7268 Group.

chanhvinh.com

27.4 Operation

The A/D converter uses the successive-approximation method, and the resolution is 10 bits. It has three operating modes: single mode, multi mode, and scan mode. Switching the operating mode or analog input channels must be done while the ADST bit in ADCSR is 0 to prevent incorrect operation. The ADST bit can be set at the same time as the operating mode or analog input channels are changed.

27.4.1 Single Mode

Single mode should be selected when only A/D conversion on one channel is required.

In single mode, A/D conversion is performed once for the specified one analog input channel, as follows:

1. A/D conversion for the selected channel starts when the ADST bit in ADCSR is set to 1 by software, the multi-function timer pulse unit 2, or external trigger input.
2. When A/D conversion is completed, the A/D conversion result is transferred to the A/D data register corresponding to the channel.
3. After A/D conversion has completed, the ADF bit in ADCSR is set to 1. If the ADIE bit is set to 1 at this time, an ADI interrupt request is generated.
4. The ADST bit that remains 1 during A/D conversion is automatically cleared to 0 when A/D conversion is completed, and the A/D converter becomes idle.

When the operating mode or analog input channel selection must be changed during A/D conversion, to prevent incorrect operation, first clear the ADST bit to 0 to halt A/D conversion. After making the necessary changes, set the ADST bit to 1 to start A/D conversion again. The ADST bit can be set at the same time as the mode or channel selection is switched.

chanhvinh.com

Typical operations when a single channel (AN1) is selected in single mode are described next. Figure 27.2 shows a timing diagram for this example (the bits which are set in this example belong to ADCSR).

1. Single mode is selected, input channel AN1 is selected (CH[2:0] = 001), the A/D interrupt is enabled (ADIE = 1), and A/D conversion is started (ADST = 1).
2. When A/D conversion is completed, the A/D conversion result is transferred into ADDRB. At the same time the ADF flag is set to 1, the ADST bit is cleared to 0, and the A/D converter becomes idle.
3. Since ADF = 1 and ADIE = 1, an ADI interrupt is requested.
4. The A/D interrupt handling routine starts.
5. The routine reads ADF = 1, and then writes 0 to the ADF flag.
6. The routine reads and processes the A/D conversion result (ADDRB).
7. Execution of the A/D interrupts handling routine ends. Then, when the ADST bit is set to 1, A/D conversion starts and steps 2 to 7 are executed.

chanhvinh.com

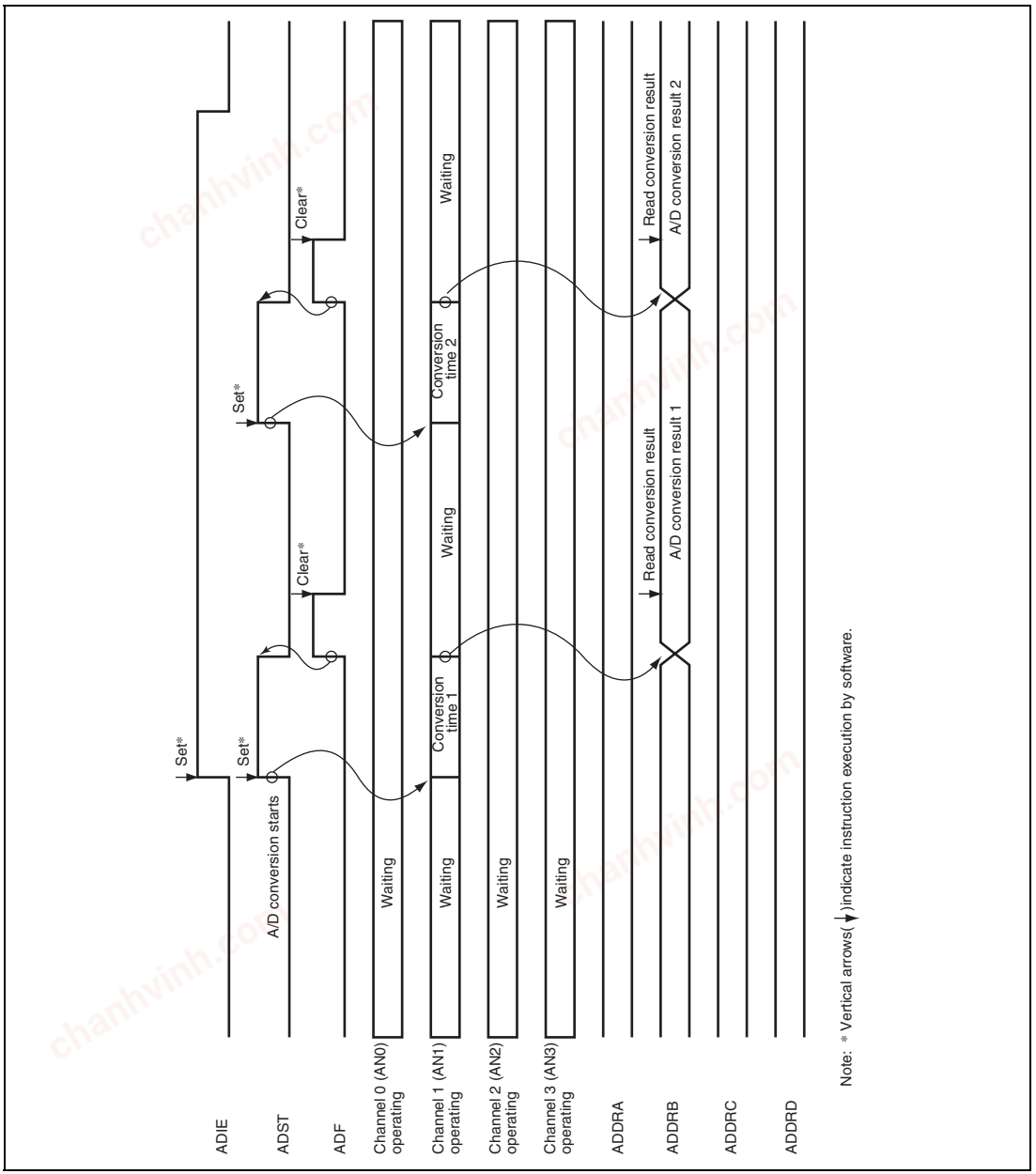

Figure 27.2 Example of A/D Converter Operation (Single Mode, One Channel (AN1) Selected)

chanhvinh.com

27.4.2 Multi Mode

Multi mode should be selected when performing A/D conversion once on one or more channels.

In multi mode, A/D conversion is performed once for a maximum of eight specified analog input channels, as follows:

1. A/D conversion starts from the analog input channel with the lowest number (e.g. AN0, AN1, …, AN3) when the ADST bit in ADCSR is set to 1 by software, the multi-function timer pulse unit 2, or external trigger input.
2. When A/D conversion is completed on each channel, the A/D conversion result is sequentially transferred to the A/D data register corresponding to that channel.
3. After A/D conversion on all selected channels has completed, the ADF bit in ADCSR is set to 1. If the ADIE bit is set to 1 at this time, an ADI interrupt request is generated.
4. The ADST bit that remains 1 during A/D conversion is automatically cleared to 0 when A/D conversion is completed, and the A/D converter becomes idle. If the ADST bit is cleared to 0 during A/D conversion, A/D conversion is halted and the A/D converter becomes idle. The ADF bit is cleared by reading ADF while ADF = 1, then writing 0 to the ADF bit.

A/D conversion is to be performed once on all the specified channels. The conversion results are transferred for storage into the A/D data registers corresponding to the channels.

When the operating mode or analog input channel selection must be changed during A/D conversion, to prevent incorrect operation, first clear the ADST bit to 0 to halt A/D conversion. After making the necessary changes, set the ADST bit to 1. A/D conversion will start again from the first channel in the group. The ADST bit can be set at the same time as the mode or channel selection is changed.

Typical operations when three channels (AN0 to AN2) are selected in multi mode are described next. Figure 27.3 shows a timing diagram for this example.

1. Multi mode is selected (MDS2 = 1, MDS1 = 0), analog input channels AN0 to AN2 are selected (CH[2:0] = 010), and A/D conversion is started (ADST = 1).
2. A/D conversion of the first channel (AN0) starts. When A/D conversion is completed, the A/D conversion result is transferred into ADDRA.
3. Next, the second channel (AN1) is selected automatically and A/D conversion starts.
4. Conversion proceeds in the same way through the third channel (AN2).
5. When conversion of all selected channels (AN0 to AN2) is completed, the ADF flag is set to 1 and the ADST bit cleared to 0.
6. If the ADIE bit is set to 1 at this time, an ADI interrupt is requested.

chanhvinh.com

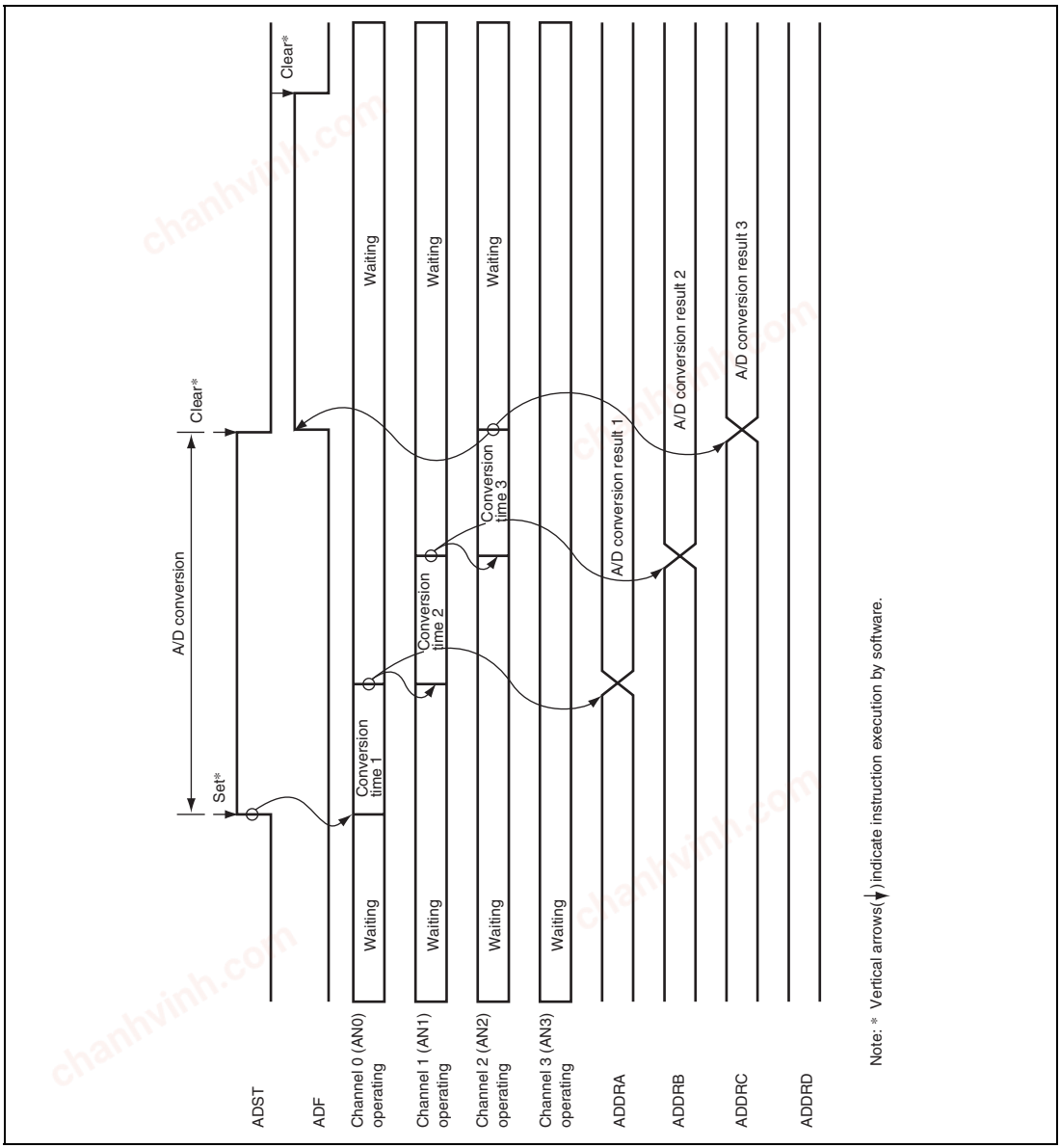

Figure 27.3 Example of A/D Converter Operation (Multi Mode, Three Channels (AN0 to AN2) Selected)

chanhvinh.com

27.4.3 Scan Mode

Scan mode is useful for monitoring analog inputs in a group of one or more channels at all times. In scan mode, A/D conversion is performed sequentially for a maximum of eight specified analog input channels, as follows:

1. A/D conversion starts from the analog input channel with the lowest number (e.g. AN0, AN1, …, AN3) when the ADST bit in ADCSR is set to 1 by software, the multi-function timer pulse unit 2, or external trigger input.
2. When A/D conversion is completed on each channel, the A/D conversion result is sequentially transferred to the A/D data register corresponding to that channel.
3. After A/D conversion on all selected channels has completed, the ADF bit in ADCSR is set to 1. If the ADIE bit is set to 1 at this time, an ADI interrupt request is generated. The A/D converter starts A/D conversion again from the channel with the lowest number.
4. The ADST bit is not cleared automatically, so steps 2. and 3. are repeated as long as the ADST bit remains set to 1. When the ADST bit is cleared to 0, A/D conversion halts and the A/D converter becomes idle.

   The ADF bit is cleared by reading ADF while ADF = 1, then writing 0 to the ADF bit.

When the operating mode or analog input channel selection must be changed during A/D conversion, to prevent incorrect operation, first clear the ADST bit to 0 to halt A/D conversion. After making the necessary changes, set the ADST bit to 1. A/D conversion will start again from the first channel in the group. The ADST bit can be set at the same time as the mode or channel selection is changed.

Typical operations when three channels (AN0 to AN2) are selected in scan mode are described as follows. Figure 27.4 shows a timing diagram for this example.

1. Scan mode is selected (MDS2 = 1, MDS1 = 1), analog input channels AN0 to AN2 are selected (CH[2:0] = 010), and A/D conversion is started (ADST = 1).
2. A/D conversion of the first channel (AN0) starts. When A/D conversion is completed, the A/D conversion result is transferred into ADDRA.
3. Next, the second channel (AN1) is selected automatically and A/D conversion starts.
4. Conversion proceeds in the same way through the third channel (AN2).
5. When conversion of all the selected channels (AN0 to AN2) is completed, the ADF flag is set to 1 and conversion of the first channel (AN0) starts again. If the ADIE bit is set to 1 at this time, an ADI interrupt is requested.

chanhvinh.com

6. The ADST bit is not cleared automatically, so steps 2. to 4. are repeated as long as the ADST bit remains set to 1. When steps 2. to 4. are repeated, the ADF flag is kept to 1. When the ADST bit is cleared to 0, A/D conversion stops. The ADF bit is cleared by reading ADF while ADF = 1, then writing 0 to the ADF bit.

If both the ADF flag and ADIE bit are set to 1 while steps 2. to 4. are repeated, an ADI interrupt is requested at all times. To generate an interrupt on completing conversion of the third channel, clear the ADF bit to 0 after an interrupt is requested.

chanhvinh.com

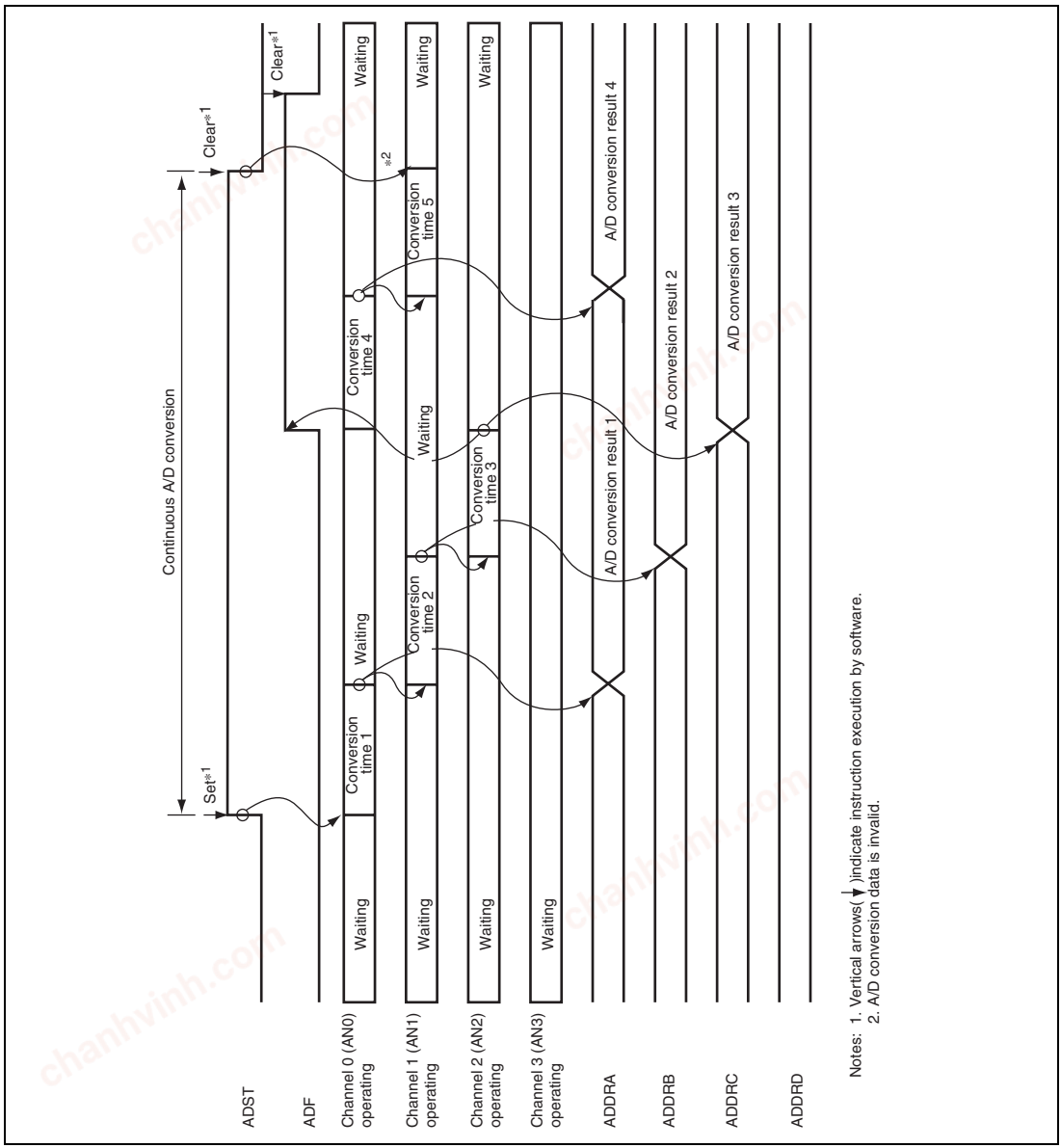

Figure 27.4 Example of A/D Converter Operation (Scan Mode, Three Channels (AN0 to AN2) Selected)

chanhvinh.com

27.4.4 A/D Converter Activation by External Trigger or Multi-Function Timer Pulse Unit 2

The A/D converter can be independently activated by an external trigger or an A/D conversion request from the multi-function timer pulse unit 2. To activate the A/D converter by an external trigger or the multi-function timer pulse unit 2, set the A/D trigger enable bits (TRGS[3:0]). When an external trigger or an A/D conversion request from the multi-function timer pulse unit 2 is generated with this bit setting, the ADST bit is set to 1 to start A/D conversion. The channel combination is determined by bits CH2 to CH0 in ADCSR. The timing from setting of the ADST bit until the start of A/D conversion is the same as when 1 is written to the ADST bit by software.

27.4.5 Input Sampling and A/D Conversion Time

The A/D converter has a built-in sample-and-hold circuit. The A/D converter samples the analog input at the A/D conversion start delay time (t_D) after the ADST bit in ADCSR is set to 1, then starts conversion. Figure 27.5 shows the A/D conversion timing. Table 27.4 indicates the A/D conversion time.

As indicated in figure 27.5, the A/D conversion time (t_{CONV}) includes t_D and the input sampling time(t_{SPL}). The length of t_D varies depending on the timing of the write access to ADCSR. The total conversion time therefore varies within the ranges indicated in table 27.4.

In multi mode and scan mode, the values given in table 27.4 apply to the first conversion. In the second and subsequent conversions, time is the values given in table 27.5.

chanhvinh.com

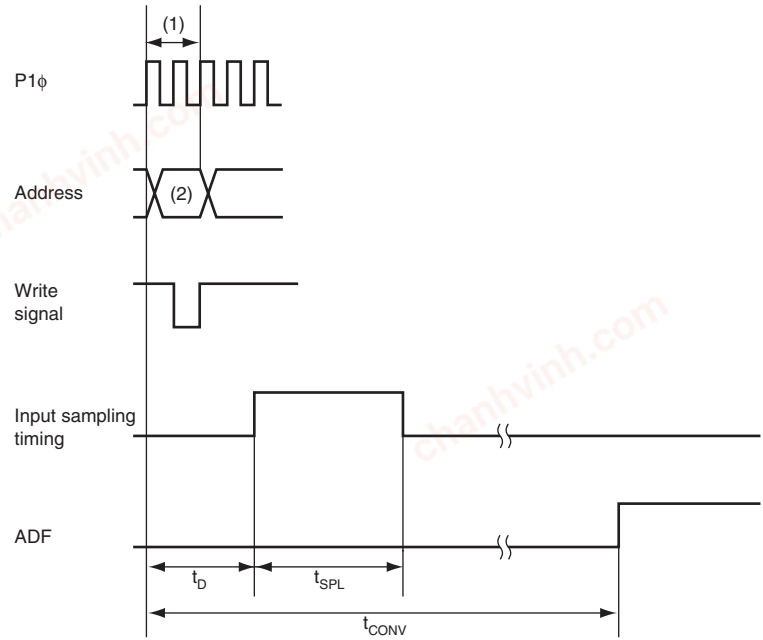

[Legend]
(1): ADCSR write cycle
(2): ADCSR address
t_D: A/D conversion start delay time
t_{SPL}: Input sampling time
t_{CONV}: A/D conversion time

Figure 27.5 A/D Conversion Timing

chanhvinh.com

Table 27.4 A/D Conversion Time (Single Mode)

Item	Symbol	CKS2 = 0								
		CKS1 = 0						CKS1 = 1		
		CKS0 = 0			CKS0 = 1			CKS0 = 0		
		Min.	Typ.	Max.	Min.	Typ.	Max.	Min.	Typ.	Max.
A/D conversion start delay time	t_D	15	—	26	17	—	30	19	—	34
Input sampling time	t_{SPL}	—	97	—	—	113	—	—	129	—
A/D conversion time	t_{CONV}	401	—	412	467	—	480	533	—	548

Note: Values in the table are represented in terms of t_{cyc} (CKIO clock output cycle time).

Table 27.5 A/D Conversion Time (Multi Mode and Scan Mode)

CKS2	CKS1	CKS0	Conversion Time (t_{cyc})
0	0	0	384 (constant)
		1	448 (constant)
	1	0	512 (constant)

Note: Values in the table are represented in terms of t_{cyc} (CKIO clock output cycle time).

chanhvinh.com

27.4.6 External Trigger Input Timing

A/D conversion can also be externally triggered. When the TRGS[3:0] bits in ADCSR are set to B'1001, an external trigger is input to the $\overline{\text{ADTRG}}$ pin. The ADST bit in ADCSR is set to 1 at the falling edge of the $\overline{\text{ADTRG}}$ pin, thus starting A/D conversion. Other operations, regardless of the operating mode, are the same as when the ADST bit has been set to 1 by software. Figure 27.6 shows the timing.

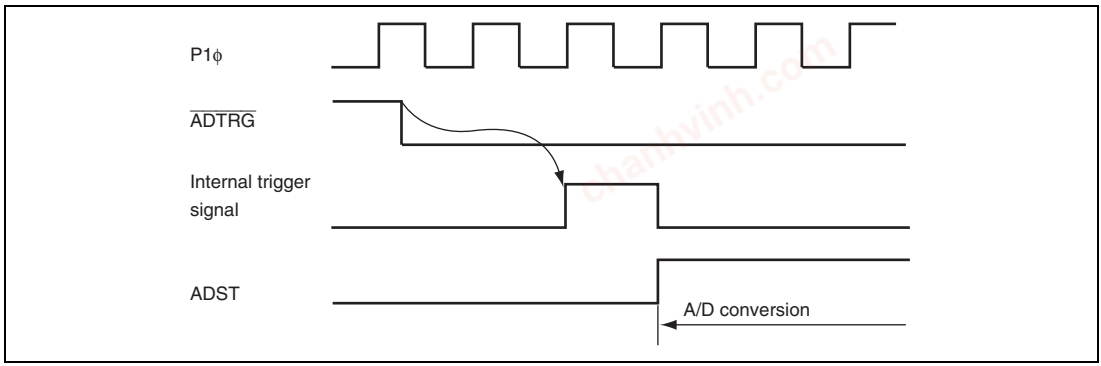

Figure 27.6 External Trigger Input Timing

chanhvinh.com

27.5 Interrupt Sources and DMA Transfer Request

The A/D converter generates an A/D conversion end interrupt (ADI) at the end of A/D conversion. An ADI interrupt request is generated if the ADIE bit is set to 1 when the ADF bit in ADCSR is set to 1 on completion of A/D conversion. Note that the direct memory access controller can be activated by an ADI interrupt depending on the setting of the direct memory access controller. In this case, an interrupt is not issued to the CPU. If the setting to activate the direct memory access controller has not been made, an interrupt request is sent to the CPU. Having the converted data read by the direct memory access controller in response to an ADI interrupt enables continuous conversion to be achieved without imposing a load on software.

In single mode, set the direct memory access controller so that DMA transfer initiated by an ADI interrupt is performed only once. In the case of A/D conversion on multiple channels in scan mode or multi mode, setting the DMA transfer count to one causes DMA transfer to finish after transferring only one channel of data. To make the direct memory access controller transfer all conversion data, set the ADDR where A/D conversion data is stored as the transfer source address, and the number of converted channels as the transfer count.

When the direct memory access controller is activated by ADI, the ADF bit in ADCSR is automatically cleared to 0 when data is transferred by the direct memory access controller.

Table 27.6 Relationship between Interrupt Sources and DMA Transfer Request

Name	Interrupt Source	Interrupt Flag	Direct Memory Access Controller Activation
ADI	A/D conversion end	ADF in ADCSR	Possible

chanhvinh.com

27.6 Definitions of A/D Conversion Accuracy

The A/D converter compares an analog value input from an analog input channel with its analog reference value and converts it to 10-bit digital data. The absolute accuracy of this A/D conversion is the deviation between the input analog value and the output digital value. It includes the following errors:

- Offset error
- Full-scale error
- Quantization error
- Nonlinearity error

These four error quantities are explained below with reference to figure 27.7. In the figure, the 10-bit A/D converter is illustrated as the 3-bit A/D converter for explanation. Offset error is the deviation between actual and ideal A/D conversion characteristics when the digital output value changes from the minimum (zero voltage) B'0000000000 (000 in the figure) to B'000000001 (001 in the figure)(figure 27.7, item (1)). Full-scale error is the deviation between actual and ideal A/D conversion characteristics when the digital output value changes from B'1111111110 (110 in the figure) to the maximum B'1111111111 (111 in the figure)(figure 27.7, item (2)). Quantization error is the intrinsic error of the A/D converter and is expressed as 1/2 LSB (figure 27.7, item (3)). Nonlinearity error is the deviation between actual and ideal A/D conversion characteristics between zero voltage and full-scale voltage (figure 27.7, item (4)). Note that it does not include offset, full-scale, or quantization error.

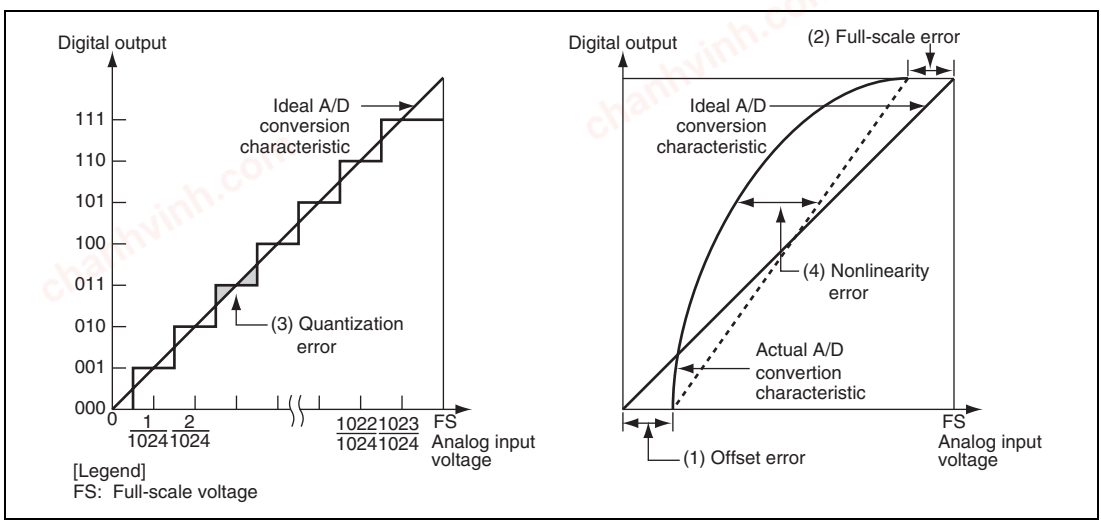

Figure 27.7 Definitions of A/D Conversion Accuracy

chanhvinh.com

27.7 Usage Notes

When using the A/D converter, note the following points.

27.7.1 Module Standby Mode Setting

Operation of the A/D converter can be disabled or enabled using the standby control register. The initial setting is for operation of the A/D converter to be halted. Register access is enabled by clearing module standby mode. For details, see section 49, Power-Down Modes.

27.7.2 Setting Analog Input Voltage

Permanent damage to the LSI may result if the following voltage ranges are exceeded.

1. Analog input range

   During A/D conversion, voltages on the analog input pins ANn should not go beyond the following range: AVss ≤ ANn ≤ AVcc (n = 0 to 7).
2. AVcc and AVss input voltages

   Input voltages AVcc and AVss should be PVcc − 0.3 V ≤ AVcc ≤ PVcc and AVss = Vss. Do not leave the AVcc and AVss pins open when the A/D converter is not in use and in software standby mode. When not in use, connect AVcc to the power supply (PVcc) and AVss to the ground (Vss).
3. Setting range of AVref input voltage

   Set the reference voltage range of the AVref pin as 3.0 V ≤ AVref ≤ AVcc.

27.7.3 Notes on Board Design

In board design, digital circuitry and analog circuitry should be as mutually isolated as possible, and layout in which digital circuit signal lines and analog circuit signal lines cross or are in close proximity should be avoided as far as possible. Failure to do so may result in incorrect operation of the analog circuitry due to inductance, adversely affecting A/D conversion values.

Digital circuitry must be isolated from the analog input signals (AN0 to AN3), analog reference voltage (AVref), and analog power supply (AVcc) by the analog ground (AVss). Also, the analog ground (AVss) should be connected at one point to a stable digital ground (Vss) on the board.

chanhvinh.com

27.7.4 Processing of Analog Input Pins

To prevent damage from voltage surges at the analog input pins (AN0 to AN7), connect an input protection circuit like the one shown in figure 27.8. The circuit shown also includes a CR filter to suppress noise. This circuit is shown as an example; the circuit constants should be selected according to actual application conditions.

Figure 27.9 shows an equivalent circuit diagram of the analog input ports and table 27.7 lists the analog input pin specifications.

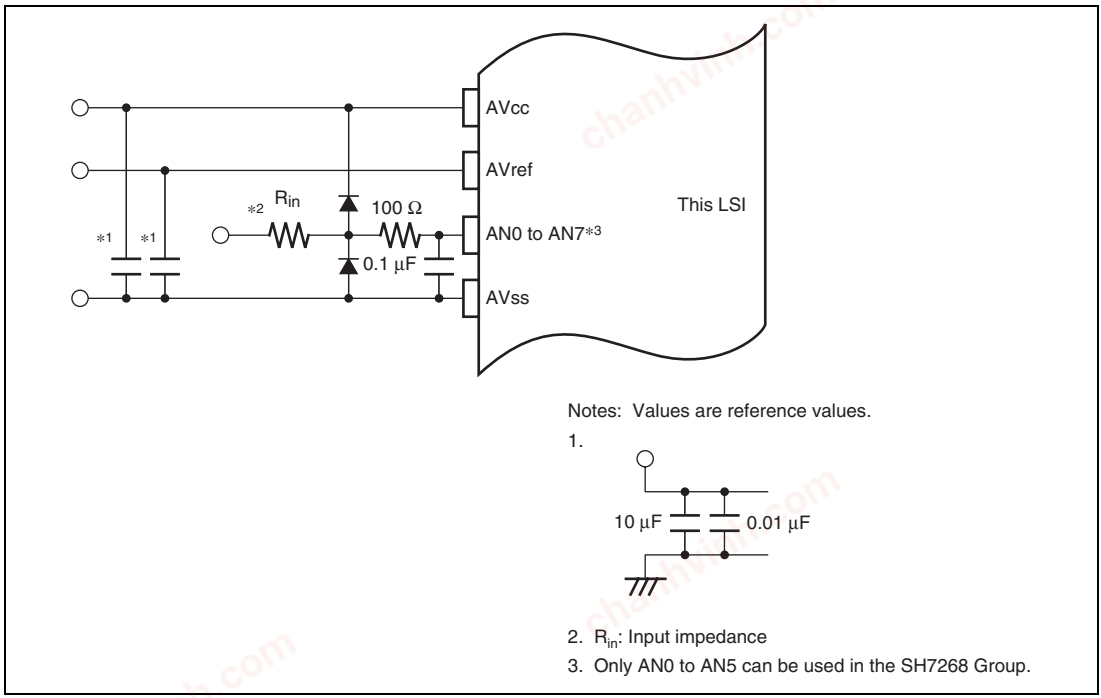

Figure 27.8 Example of Analog Input Protection Circuit

chanhvinh.com

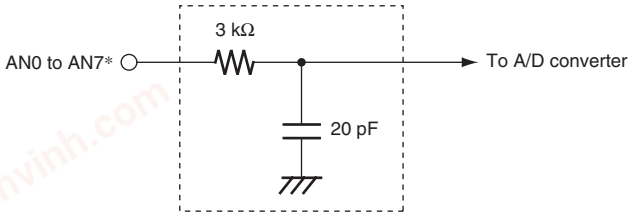

Note: Values are reference values.
* Only AN0 to AN5 can be used in the SH7268 Group.

Figure 27.9 Analog Input Pin Equivalent Circuit

Table 27.7 Analog Input Pin Ratings

Item	Min.	Max.	Unit
Analog input capacitance	—	20	pF
Allowable signal-source impedance	—	5	kΩ

27.7.5 Permissible Signal Source Impedance

This LSI's analog input is designed such that conversion precision is guaranteed for an input signal for which the signal source impedance is 5 kΩ or less. This specification is provided to enable the A/D converter's sample-and-hold circuit input capacitance to be charged within the sampling time; if the sensor output impedance exceeds 5 kΩ, charging may be insufficient and it may not be possible to guarantee A/D conversion precision. However, for A/D conversion in single mode with a large capacitance provided externally for A/D conversion in single mode, the input load will essentially comprise only the internal input resistance of 3 kΩ, and the signal source impedance is ignored. However, as a low-pass filter effect is obtained in this case, it may not be possible to follow an analog signal with a large differential coefficient (e.g., 5 mV/µs or greater) (see figure 27.10). When converting a high-speed analog signal, a low-impedance buffer should be inserted.

chanhvinh.com

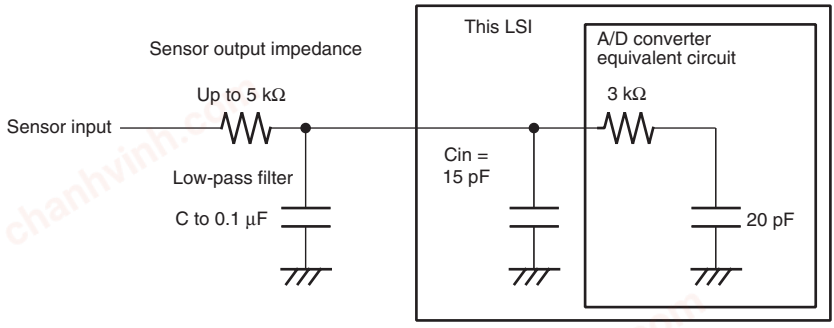

Note: Values are reference values.

Figure 27.10 Example of Analog Input Circuit

27.7.6 Influences on Absolute Precision

Adding capacitance results in coupling with GND, and therefore noise in GND may adversely affect absolute precision. Be sure to connect AVss, etc. to an electrically stable GND.

Care is also required to insure that filter circuits do not interfere with digital signals on the mounting board (i.e., acting as antennas).

27.7.7 Note on Usage in Scan Mode and Multi Mode

Starting conversion immediately after having stopped scan mode or multi mode operation may lead to erroneous results of conversion.

To perform continuous conversion in such cases, set ADST to 0, wait for at least the A/D conversion time for a single channel to elapse, and then start conversion (ADST = 1). (The A/D conversion time for a single channel will vary according to the settings of the ADC registers.)

chanhvinh.com

chanhvinh.com
chanhvinh.com
chanhvinh.com

chanhvinh.com

Section 28 NAND Flash Memory Controller

The NAND flash memory controller provides interfaces for an external NAND-type flash memory.

28.1 Features

(1) NAND-Type Flash Memory Interface

- Interface directly connectable to NAND-type flash memory
- Read or write in sector units (512 + 16 bytes)
- Read or write in byte units
- Supports large-block (2048 + 64 bytes) flash memory*
- Supports addresses for 2 Gbits and more by extension to 5-byte addresses

Note: * This module handles 512 + 16 bytes as a sector. For products with 2048 + 64 byte-pages, this module divides a page into 512 +16 bytes units (i.e. four sectors per page) for processing.

(2) Access Modes: This module can select one of the following two access modes.

- Command access mode: Performs an access by specifying a command to be issued from this module to flash memory, address, and data size to be input or output.
- Sector access mode: Performs a read or write in sector units by specifying a sector address. By specifying the number of sectors, the continuous physical sectors can be read or written.

(3) Sectors and Control Codes

- A sector is the basic unit of access and comprised of 512-byte data and 16-byte control code fields.
- User information can be written to any part of the control code field.

chanhvinh.com

(4) Data Error

- When a program error or erase error occurs, the error is reflected on the error source flags. Interrupts for each source can be specified.

(5) Data Transfer FIFO and Data Register

- The 224-byte data FIFO register (FLDTFIFO) is incorporated for data transfer of flash memory.
- The 32-byte control code FIFO register (FLECFIFO) is incorporated for data transfer of control code.

(6) DMA Transfer

- By individually specifying the destinations of data and control code of flash memory to the direct memory access controller, data and control code can be sent to different areas.

(7) Access Time

- The operating clock (FCLK) on the pins for the NAND-type flash memory is generated by dividing the peripheral clock 0 (P0ϕ). The division ratio can be specified by the QTSEL bit in the common control register (FLCMNCR).
- Before changing the clock pulse generator configuration, this module must be placed in a module stop state.
- In NAND-type flash memory, the $\overline{\text{FRE}}$ and $\overline{\text{FWE}}$ pins operate at the frequency of FCLK. The operating frequency must be specified within the maximum operating frequency of memory to be connected.

chanhvinh.com

Figure 28.1 shows a block diagram.

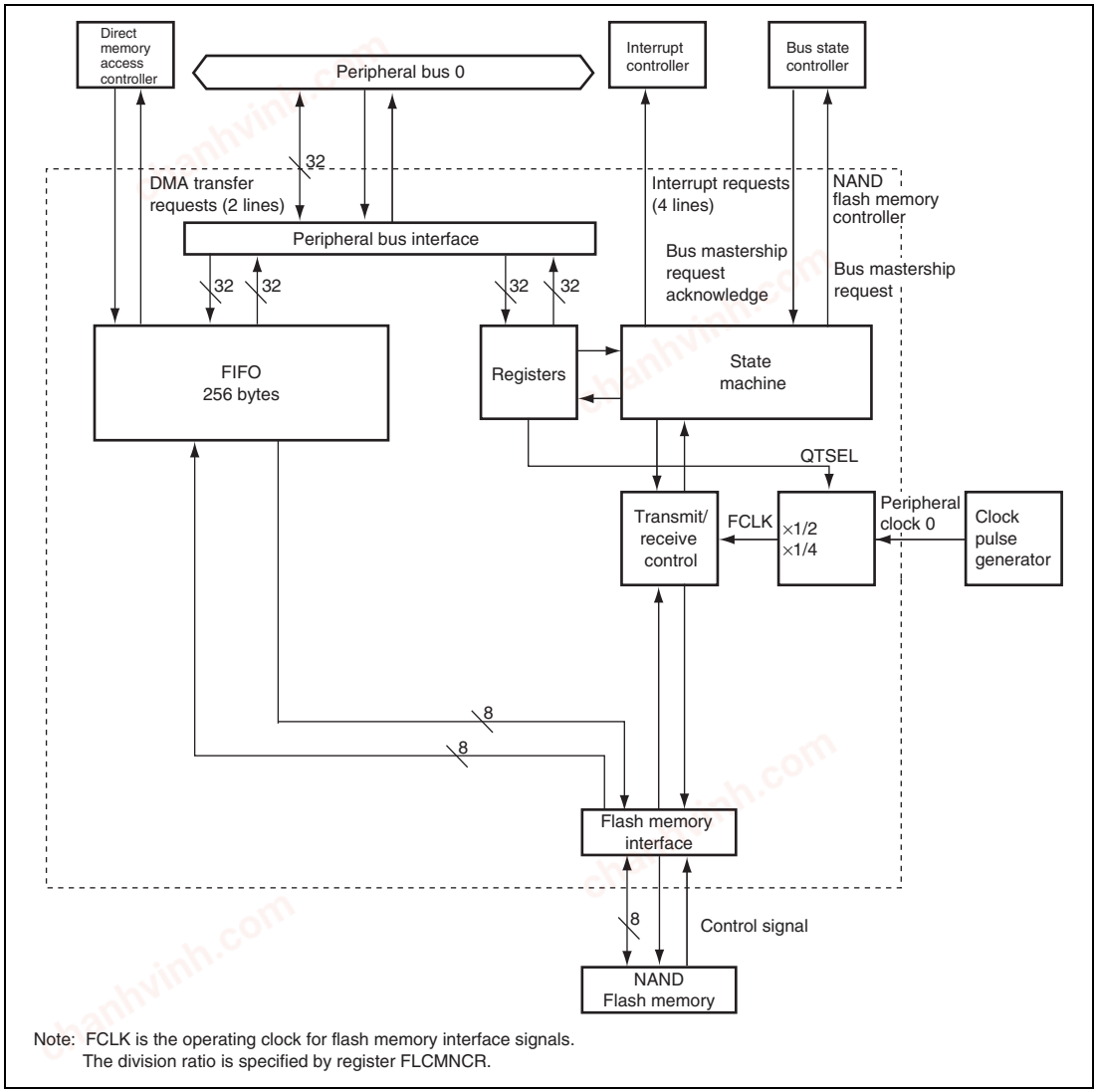

Figure 28.1 Block Diagram

chanhvinh.com

28.2 Input/Output Pins

The pin configuration of is listed in table 28.1.

Table 28.1 Pin Configuration

		Corresponding Flash Memory Pin	
Pin Name	**I/O**	**NAND Type**	**Function**
$\overline{\text{FCE}}$	Output	$\overline{\text{CE}}$	Flash Memory Chip Enable Enables flash memory connected to this LSI.
NAF7 to NAF0	I/O	I/O7 to I/O0	Flash Memory Data I/O pins for command, address, and data.
FCLE	Output	CLE	Flash Memory Command Latch Enable Asserted when a command is output.
FALE	Output	ALE	Flash Memory Address Latch Enable Asserted when an address is output and negated when data is input or output.
$\overline{\text{FRE}}$	Output	$\overline{\text{RE}}$	Flash Memory Read Enable Reads data at the falling edge of $\overline{\text{RE}}$.
$\overline{\text{FWE}}$	Output	$\overline{\text{WE}}$	Flash Memory Write Enable Flash memory latches a command, address, and data at the rising edge of $\overline{\text{WE}}$.
FRB	Input	R/$\overline{\text{B}}$	Flash Memory Ready/Busy Indicates ready state at high level; indicates busy state at low level.
—*	—	$\overline{\text{WP}}$	Write Protect/Reset When this pin goes low, erroneous erasure or programming at power on or off can be prevented.
—*	—	$\overline{\text{SE}}$	Spare Area Enable Used to access spare area. This pin must be fixed at low in sector access mode.

Note: * Not supported in this LSI.

chanhvinh.com

28.3 Register Descriptions

Table 28.2 shows the register configuration.

Table 28.2 Register Configuration

Register Name	Abbreviation	R/W	Initial Value	Address	Access Size
Common control register	FLCMNCR	R/W	H'00100001	H'FFFF4000	32
Command control register	FLCMDCR	R/W	H'00000000	H'FFFF4004	32
Command code register	FLCMCDR	R/W	H'00000000	H'FFFF4008	32
Address register	FLADR	R/W	H'00000000	H'FFFF400C	32
Address register 2	FLADR2	R/W	H'00000000	H'FFFF403C	32
Data register	FLDATAR	R/W	H'00000000	H'FFFF4010	32
Data counter register	FLDTCNTR	R/W	H'00000000	H'FFFF4014	32
Interrupt DMA control register	FLINTDMACR	R/W	H'00000000	H'FFFF4018	32
Ready busy timeout setting register	FLBSYTMR	R/W	H'00000000	H'FFFF401C	32
Ready busy timeout counter	FLBSYCNT	R	H'00000000	H'FFFF4020	32
Data FIFO register	FLDTFIFO	R/W	H'xxxxxxxx	H'FFFF4050	32
Control code FIFO register	FLECFIFO	R/W	H'xxxxxxxx	H'FFFF4060	32
Transfer control register	FLTRCR	R/W	H'00	H'FFFF402C	8
Bus hold time setting register	FLHOLDCR	R/W	H'00000000	H'FFFF4038	32

chanhvinh.com

28.3.1 Common Control Register (FLCMNCR)

FLCMNCR is a 32-bit readable/writable register that specifies access mode, and other items.

Bit:	31	30	29	28	27	26	25	24	23	22	21	20	19	18	17	16
	-	-	-	-	-	-	-	-	-	-	BUSYON	-	-	SNAND	QT SEL	-
Initial value:	0	0	0	0	0	0	0	0	0	0	0	1	0	0	0	0
R/W:	R	R	R	R	R	R	R	R	R	R	R/W	R	R	R/W	R/W	R

Bit:	15	14	13	12	11	10	9	8	7	6	5	4	3	2	1	0
	-	-	-	-	ACM[1:0]		NAND WF	-	-	-	-	-	CE	-	-	-
Initial value:	0	0	0	0	0	0	0	0	0	0	0	0	0	0	0	1
R/W:	R	R	R	R	R/W	R/W	R/W	R	R	R	R	R	R/W	R	R	R

Bit	Bit Name	Initial Value	R/W	Description
31 to 22	—	All 0	R	Reserved These bits are always read as 0. The write value should always be 0.
21	BUSYON	0	R/W	Busy Select Specifies whether to release the external bus mastership while the FRB pin is busy. The $\overline{\text{FCE}}$ pin, however, is negated regardless of the busy/ready state upon completion of a necessary process. For details, see section 28.7.1, External Bus Mastership Release Timing. 0: Holds the bus mastership while the FRB pin is busy. 1: Releases the bus mastership while the FRB pin is busy. Note: Some flash memory devices do not allow the $\overline{\text{FCE}}$ pin to be negated during the busy state.
20	—	1	R	Reserved This bit is always read as 1. The write value should always be 1.
19	—	0	R	Reserved This bit is always read as 0. The write value should always be 0.

chanhvinh.com

Bit	Bit Name	Initial Value	R/W	Description
18	SNAND	0	R/W	Large-Capacity NAND Flash Memory Select This bit is used to specify 1-Gbit or larger NAND flash memory with the page configuration of 2048 + 64 bytes. 0: When flash memory with the page configuration of 512 + 16 bytes is used. 1: When NAND flash memory with the page configuration of 2048 + 64 is used.
17	QTSEL	0	R/W	Select Dividing Rates for Flash Clock Selects the dividing rate of clock FCLK in the flash memory. 0: Divides a clock (P0ϕ) provided from the clock pulse generator by two and uses it as FCLK. 1: Divides a clock (P0ϕ) provided from the clock pulse generator by four and uses it as FCLK.
16 to 12	—	All 0	R	Reserved These bits are always read as 0. The write value should always be 0.
11, 10	ACM[1:0]	00	R/W	Access Mode Specification 1 and 0 Specify access mode. 00: Command access mode 01: Sector access mode 10: Setting prohibited 11: Setting prohibited
9	NANDWF	0	R/W	NAND Wait Insertion Operation 0: Performs address or data input/output in one FCLK cycle 1: Performs address or data input/output in two FCLK cycles
8 to 4	—	All 0	R	Reserved These bits are always read as 0. The write value should always be 0.
3	CE	0	R/W	Chip Enable 0: Disables the chip (Outputs high level to the $\overline{\text{FCE}}$ pin) 1: Enables the chip (Outputs low level to the $\overline{\text{FCE}}$ pin)
2, 1	—	All 0	R	Reserved These bits are always read as 0. The write value should always be 0.

chanhvinh.com

Bit	Bit Name	Initial Value	R/W	Description
0	—	1	R	Reserved This bit is always read as 1. The write value should always be 1.

chanhvinh.com

28.3.2 Command Control Register (FLCMDCR)

FLCMDCR is a 32-bit readable/writable register that issues a command in command access mode, specifies address issue, and specifies source or destination of data transfer. In sector access mode, FLCMDCR specifies the number of sector transfers.

Bit:	31	30	29	28	27	26	25	24	23	22	21	20	19	18	17	16
	ADR CNT2	SCTCNT[19:16]				ADR MD	CDS RC	DOSR	-	-	SEL RW	DOA DR	ADRCNT[1:0]		DOC MD2	DOC MD1
Initial value:	0	0	0	0	0	0	0	0	0	0	0	0	0	0	0	0
R/W:	R/W	R/W	R/W	R/W	R/W	R/W	R/W	R/W	R	R	R/W	R/W	R/W	R/W	R/W	R/W

Bit:	15	14	13	12	11	10	9	8	7	6	5	4	3	2	1	0
	SCTCNT[15:0]															
Initial value:	0	0	0	0	0	0	0	0	0	0	0	0	0	0	0	0
R/W:	R/W	R/W	R/W	R/W	R/W	R/W	R/W	R/W	R/W	R/W	R/W	R/W	R/W	R/W	R/W	R/W

Bit	Bit Name	Initial Value	R/W	Description
31	ADRCNT2	0	R	Address Issue Byte Count Specification 2 Specifies the number of bytes for the address data to be issued in address stage. This bit is used together with ADRCNT[1:0]. 0: Issue the address of byte count, specified by ADRCNT[1:0]. 1: Issue 5-byte address. ADRCNT[1:0] should be set to 00.
30 to 27	SCTCNT [19:16]	0000	R/W	Sector Transfer Count Specification [19:16] These bits are extended bits of the sector transfer count specification bits (SCTCNT) 15 to 0. SCTCNT[19:16] and SCTCNT[15:0] are used together to operate as SCTCNT[19:0], the 20-bit counter.
26	ADRMD	0	R/W	Sector Access Address Specification This bit is invalid in command access mode. This bit is valid only in sector access mode. 0: The value of the address register is handled as a sector address. Use this value usually in sector access. 1: The value of the address register is output as the address of flash memory. Note: Clear this bit to 0 in continuous sector access.

chanhvinh.com

Bit	Bit Name	Initial Value	R/W	Description
25	CDSRC	0	R/W	Data Buffer Specification Specifies the data buffer to be read from or written to in the data stage in command access mode. 0: Specifies FLDATAR as the data buffer. 1: Specifies FLDTFIFO as the data buffer.
24	DOSR	0	R/W	Status Read Check Specifies whether or not the status read is performed after the second command has been issued in command access mode. 0: Performs no status read 1: Performs status read
23, 22	—	All 0	R	Reserved These bits are always read as 0. The write value should always be 0.
21	SELRW	0	R/W	Data Read/Write Specification Specifies the direction of read or write in data stage. 0: Read 1: Write
20	DOADR	0	R/W	Address Stage Execution Specification Specifies whether or not the address stage is executed in command access mode. 0: Performs no address stage 1: Performs address stage
19, 18	ADRCNT [1:0]	00	R/W	Address Issue Byte Count Specification [1:0] Specify the number of bytes for the address data to be issued in address stage. 00: Issue 1-byte address 01: Issue 2-byte address 10: Issue 3-byte address 11: Issue 4-byte address

chanhvinh.com

Bit	Bit Name	Initial Value	R/W	Description
17	DOCMD2	0	R/W	Second Command Stage Execution Specification Specifies whether or not the second command stage is executed in command access mode. 0: Does not execute the second command stage 1: Executes the second command stage
16	DOCMD1	0	R/W	First Command Stage Execution Specification Specifies whether or not the first command stage is executed in command access mode. 0: Does not execute the first command stage 1: Executes the first command stage
15 to 0	SCTCNT [15:0]	H'0000	R/W	Sector Transfer Count Specification [15:0] Specify the number of sectors to be read continuously in sector access mode. These bits are counted down for each sector transfer end and stop when they reach 0. These bits are used together with SCTCNT[19:16]. In command access mode, these bits are H'0 0001.

chanhvinh.com

28.3.3 Command Code Register (FLCMCDR)

FLCMCDR is a 32-bit readable/writable register that specifies a command to be issued in command access or sector access.

Bit:	31	30	29	28	27	26	25	24	23	22	21	20	19	18	17	16
	-	-	-	-	-	-	-	-	-	-	-	-	-	-	-	-
Initial value:	0	0	0	0	0	0	0	0	0	0	0	0	0	0	0	0
R/W:	R	R	R	R	R	R	R	R	R	R	R	R	R	R	R	R

Bit:	15	14	13	12	11	10	9	8	7	6	5	4	3	2	1	0
	CMD2[7:0]								CMD1[7:0]							
Initial value:	0	0	0	0	0	0	0	0	0	0	0	0	0	0	0	0
R/W:	R/W	R/W	R/W	R/W	R/W	R/W	R/W	R/W	R/W	R/W	R/W	R/W	R/W	R/W	R/W	R/W

Bit	Bit Name	Initial Value	R/W	Description
31 to 16	—	All 0	R	Reserved These bits are always read as 0. The write value should always be 0.
15 to 8	CMD2[7:0]	H'00	R/W	Second Command Data Specify a command code to be issued in the second command stage.
7 to 0	CMD1[7:0]	H'00	R/W	First Command Data Specify a command code to be issued in the first command stage.

chanhvinh.com

28.3.4 Address Register (FLADR)

FLADR is a 32-bit readable/writable register that specifies the value to be output as an address.

The address of the size specified by ADRCNT[1:0] in the command control register is output sequentially from ADR1 in byte units. By the sector access address specification bit (ADRMD) of the command control register, it is possible to specify whether the sector number set in the address data bits is converted into an address to be output to the flash memory.

- When ADRMD = 1

Bit:	31	30	29	28	27	26	25	24	23	22	21	20	19	18	17	16
	ADR4[7:0]								ADR3[7:0]							
Initial value:	0	0	0	0	0	0	0	0	0	0	0	0	0	0	0	0
R/W:	R/W	R/W	R/W	R/W	R/W	R/W	R/W	R/W	R/W	R/W	R/W	R/W	R/W	R/W	R/W	R/W

Bit:	15	14	13	12	11	10	9	8	7	6	5	4	3	2	1	0
	ADR2[7:0]								ADR1[7:0]							
Initial value:	0	0	0	0	0	0	0	0	0	0	0	0	0	0	0	0
R/W:	R/W	R/W	R/W	R/W	R/W	R/W	R/W	R/W	R/W	R/W	R/W	R/W	R/W	R/W	R/W	R/W

Bit	Bit Name	Initial Value	R/W	Description
31 to 24	ADR4[7:0]	H'00	R/W	Fourth Address Data Specify 4th data to be output to flash memory as an address when ADRMD = 1.
23 to 16	ADR3[7:0]	H'00	R/W	Third Address Data Specify 3rd data to be output to flash memory as an address when ADRMD = 1.
15 to 8	ADR2[7:0]	H'00	R/W	Second Address Data Specify 2nd data to be output to flash memory as an address when ADRMD = 1.
7 to 0	ADR1[7:0]	H'00	R/W	First Address Data Specify 1st data to be output to flash memory as an address when ADRMD = 1.

chanhvinh.com

- When ADRMD = 0

Bit:	31	30	29	28	27	26	25	24	23	22	21	20	19	18	17	16
	-	-	-	-	-	-	ADR[25:16]									
Initial value:	0	0	0	0	0	0	0	0	0	0	0	0	0	0	0	0
R/W:	R	R	R	R	R	R	R/W	R/W	R/W	R/W	R/W	R/W	R/W	R/W	R/W	R/W

Bit:	15	14	13	12	11	10	9	8	7	6	5	4	3	2	1	0
	ADR[15:0]															
Initial value:	0	0	0	0	0	0	0	0	0	0	0	0	0	0	0	0
R/W:	R/W	R/W	R/W	R/W	R/W	R/W	R/W	R/W	R/W	R/W	R/W	R/W	R/W	R/W	R/W	R/W

Bit	Bit Name	Initial Value	R/W	Description
31 to 26	—	All 0	R	Reserved These bits are always read as 0. The write value should always be 0.
25 to 0	ADR[25:0]	H'0000 000	R/W	Sector Address Specification Specify a sector number to be accessed when ADRMD = 0. The sector number is converted into an address and is output to flash memory. When the ADRCNT2 bit in FLCMDCR = 1, the ADR[25:0] bits are valid. When the ADRCNT2 bit in FLCMDCR = 0, the ADR[17:0] bits are valid. See figure 28.11 for details. • Large-block products (2048 + 64 bytes) ADR[25:2] specifies the page address and ADR[1:0] specifies the column address in sector units. ADR[1:0] = 00: 0th byte (sector 0) ADR[1:0] = 01: (512 + 16)th byte (sector 1) ADR[1:0] = 00: (1024 + 32)th byte (sector 2) ADR[1:0] = 00: (1536 + 48)th byte (sector 3) • Small-block products (512 + 16 bytes) Only the page address can be specified.

chanhvinh.com

28.3.5 Address Register 2 (FLADR2)

FLADR2 is a 32-bit readable/writable register, and is valid when the ADRCNT2 bit in FLCMDCR is set to 1. FLADR2 specifies an address to be output in command access mode.

Bit:	31	30	29	28	27	26	25	24	23	22	21	20	19	18	17	16
	-	-	-	-	-	-	-	-	-	-	-	-	-	-	-	-
Initial value:	0	0	0	0	0	0	0	0	0	0	0	0	0	0	0	0
R/W:	R	R	R	R	R	R	R	R	R	R	R	R	R	R	R	R

Bit:	15	14	13	12	11	10	9	8	7	6	5	4	3	2	1	0
	-	-	-	-	-	-	-	-	ADR5[7:0]							
Initial value:	0	0	0	0	0	0	0	0	0	0	0	0	0	0	0	0
R/W:	R	R	R	R	R	R	R	R	R/W	R/W	R/W	R/W	R/W	R/W	R/W	R/W

Bit	Bit Name	Initial Value	R/W	Description
31 to 8	—	All 0	R	Reserved These bits are always read as 0. The write value should always be 0.
7 to 0	ADR5[7:0]	H'00	R/W	Fifth Address Data Specify 5th data to be output to flash memory as an address when ADRMD = 1.

chanhvinh.com

28.3.6 Data Counter Register (FLDTCNTR)

FLDTCNTR is a 32-bit readable/writable register that specifies the number of bytes to be read or written in command access mode.

Bit:	31	30	29	28	27	26	25	24	23	22	21	20	19	18	17	16
	ECFLW[7:0]								DTFLW[7:0]							
Initial value:	0	0	0	0	0	0	0	0	0	0	0	0	0	0	0	0
R/W:	R	R	R	R	R	R	R	R	R	R	R	R	R	R	R	R

Bit:	15	14	13	12	11	10	9	8	7	6	5	4	3	2	1	0
	-	-	-	-	DTCNT[11:0]											
Initial value:	0	0	0	0	0	0	0	0	0	0	0	0	0	0	0	0
R/W:	R	R	R	R	R/W	R/W	R/W	R/W	R/W	R/W	R/W	R/W	R/W	R/W	R/W	R/W

Bit	Bit Name	Initial Value	R/W	Description
31 to 24	ECFLW [7:0]	H'00	R	FLECFIFO Access Count Specify the number of longwords in FLECFIFO to be read or written. These bit values are used when the CPU reads from or writes to FLECFIFO. In FLECFIFO read, these bits specify the number of longwords of the data that can be read from FLECFIFO. In FLECFIFO write, these bits specify the number of longwords of unoccupied area that can be written in FLECFIFO.
23 to 16	DTFLW [7:0]	H'00	R	FLDTFIFO Access Count Specify the number of longwords in FLDTFIFO to be read or written. These bit values are used when the CPU reads from or writes to FLDTFIFO. In FLDTFIFO read, these bits specify the number of longwords of the data that can be read from FLDTFIFO. In FLDTFIFO write, these bits specify the number of longwords of unoccupied area that can be written in FLDTFIFO.
15 to 12	—	All 0	R	Reserved These bits are always read as 0. The write value should always be 0.
11 to 0	DTCNT [11:0]	H'000	R/W	Data Count Specification Specify the number of bytes of data to be read or written in command access mode. (Up to 2048 + 64 bytes can be specified.)

chanhvinh.com

28.3.7 Data Register (FLDATAR)

FLDATAR is a 32-bit readable/writable register. It stores input/output data used when 0 is written to the CDSRC bit in FLCMDCR in command access mode. FLDATAR cannot be used for reading or writing of five or more bytes of contiguous data.

Bit:	31	30	29	28	27	26	25	24	23	22	21	20	19	18	17	16
	DT4[7:0]								DT3[7:0]							
Initial value:	0	0	0	0	0	0	0	0	0	0	0	0	0	0	0	0
R/W:	R/W	R/W	R/W	R/W	R/W	R/W	R/W	R/W	R/W	R/W	R/W	R/W	R/W	R/W	R/W	R/W

Bit:	15	14	13	12	11	10	9	8	7	6	5	4	3	2	1	0
	DT2[7:0]								DT1[7:0]							
Initial value:	0	0	0	0	0	0	0	0	0	0	0	0	0	0	0	0
R/W:	R/W	R/W	R/W	R/W	R/W	R/W	R/W	R/W	R/W	R/W	R/W	R/W	R/W	R/W	R/W	R/W

Bit	Bit Name	Initial Value	R/W	Description
31 to 24	DT4[7:0]	H'00	R/W	Fourth Data Specify the 4th data to be input or output via the NAF7 to NAF0 pins. In write: Specify write data In read: Store read data
23 to 16	DT3[7:0]	H'00	R/W	Third Data Specify the 3rd data to be input or output via the NAF7 to NAF0 pins. In write: Specify write data In read: Store read data
15 to 8	DT2[7:0]	H'00	R/W	Second Data Specify the 2nd data to be input or output via the NAF7 to NAF0 pins. In write: Specify write data In read: Store read data
7 to 0	DT1[7:0]	H'00	R/W	First Data Specify the 1st data to be input or output via the NAF7 to NAF0 pins. In write: Specify write data In read: Store read data

chanhvinh.com

28.3.8 Interrupt DMA Control Register (FLINTDMACR)

FLINTDMACR is a 32-bit readable/writable register that enables or disables DMA transfer requests or interrupts. A transfer request from this module to the direct memory access controller is issued after each access mode has been started.

Bits 9 to 5 are the flag bits that indicate various errors occurred in flash memory access and whether there is a transfer request from the FIFO. Only 0 can be written to these bits. To clear a flag, write 0 to the target flag bit and 1 to the other flag bits.

Bit:	31	30	29	28	27	26	25	24	23	22	21	20	19	18	17	16
	-	-	-	-	-	-	-	-	-	-	FIFOTRG [1:0]		AC1 CLR	AC0 CLR	DREQ1 EN	DREQ0 EN
Initial value:	0	0	0	0	0	0	0	0	0	0	0	0	0	0	0	0
R/W:	R	R	R	R	R	R	R	R	R	R	R/W	R/W	R/W	R/W	R/W	R/W

Bit:	15	14	13	12	11	10	9	8	7	6	5	4	3	2	1	0
	-	-	-	-	-	-	-	ST ERB	BTO ERB	TRR EQF1	TRR EQF0	STER INTE	RBER INTE	TE INTE	TR INTE1	TR INTE0
Initial value:	0	0	0	0	0	0	0	0	0	0	0	0	0	0	0	0
R/W:	R	R	R	R	R	R	R	R/(W)*	R/(W)*	R/(W)*	R/(W)*	R/W	R/W	R/W	R/W	R/W

Note: * Only 0 can be written to these bits.

Bit	Bit Name	Initial Value	R/W	Description
31 to 22	—	All 0	R	Reserved These bits are always read as 0. The write value should always be 0.

chanhvinh.com

Bit	Bit Name	Initial Value	R/W	Description
21, 20	FIFOTRG [1:0]	00	R/W	FIFO Trigger Setting Specify the condition (the byte number) for generation of FLDTFIFO and FLECFIFO transfer requests. • In flash-memory read Issue an interrupt to the CPU or issue a DMA transfer request when FLDTFIFO (FLECFIFO) stores the following number of bytes or more: 00: 4 (4) 01: 16 (16) 10: 128 (4) 11: 128 (16) • In flash-memory programming Issue an interrupt to the CPU or issue a DMA transfer request when FLDTFIFO (FLECFIFO) has the following empty area of bytes or more: 00: 4 (4) 01: 16 (16) 10: 128 (4) 11: 128 (16) Note: For DMA transfer from/to FLDTFIFO, setting 10 and 11 are prohibited.
19	AC1CLR	0	R/W	FLECFIFO Clear Clears FLECFIFO. 0: Retains the FLECFIFO value. In flash-memory access, this bit should be cleared to 0. 1: Clears FLECFIFO. After FLECFIFO has been cleared, this bit should be cleared to 0.
18	AC0CLR	0	R/W	FLDTFIFO Clear Clears FLDTFIFO. 0: Retains the FLDTFIFO value. In flash-memory access, this bit should be cleared to 0. 1: Clears FLDTFIFO. After FLDTFIFO has been cleared, this bit should be cleared to 0.

chanhvinh.com

Bit	Bit Name	Initial Value	R/W	Description
17	DREQ1EN	0	R/W	FLECFIFODMA Request Enable Enables or disables the DMA transfer request issued from FLECFIFO. 0: Disables the DMA transfer request issued from FLECFIFO 1: Enables the DMA transfer request issued from FLECFIFO
16	DREQ0EN	0	R/W	FLDTFIFODMA Request Enable Enables or disables the DMA transfer request issued from FLDTFIFO. 0: Disables the DMA transfer request issued from the FLDTFIFO 1: Enables the DMA transfer request issued from the FLDTFIFO
15 to 9	—	All 0	R	Reserved These bits are always read as 0. The write value should always be 0.
8	STERB	0	R/(W)*	Status Error Indicates the result of status read. This bit is set to 1 if the specific bit in the bits STAT[7:0] in FLBSYCNT is set to 1 in status read. This bit is a flag. 1 cannot be written to this bit. Only 0 can be written to clear the flag. 0: Indicates that no status error occurs (the specific bit in the bits STAT[7:0] in FLBSYCNT is 0.) 1: Indicates that a status error occurs For details on the specific bit in STAT7 to STAT0 bits, see section 28.4.6, Status Read.
7	BTOERB	0	R/(W)*	R/$\overline{B}$ Timeout Error This bit is set to 1 if an R/$\overline{B}$ timeout error occurs (the bits RBTIMCNT[19:0] in FLBSYCNT are decremented to 0). This bit is a flag. 1 cannot be written to this bit. Only 0 can be written to clear the flag. 0: Indicates that no R/$\overline{B}$ timeout error occurs 1: Indicates that an R/$\overline{B}$ timeout error occurs

chanhvinh.com

Bit	Bit Name	Initial Value	R/W	Description
6	TRREQF1	0	R/(W)*	FLECFIFO Transfer Request Flag Indicates that a transfer request is issued from FLECFIFO. This bit is a flag. 1 cannot be written to this bit. Only 0 can be written to clear the flag. 0: Indicates that no transfer request is issued from FLECFIFO 1: Indicates that a transfer request is issued from FLECFIFO
5	TRREQF0	0	R/(W)*	FLDTFIFO Transfer Request Flag Indicates that a transfer request is issued from FLDTFIFO. This bit is a flag. 1 cannot be written to this bit. Only 0 can be written to clear the flag. 0: Indicates that no transfer request is issued from FLDTFIFO 1: Indicates that a transfer request is issued from FLDTFIFO
4	STERINTE	0	R/W	Interrupt Enable at Status Error Enables or disables an interrupt request to the CPU when a status error has occurred. 0: Disables the interrupt request to the CPU by a status error 1: Enables the interrupt request to the CPU by a status error
3	RBERINTE	0	RW	Interrupt Enable at R/$\overline{B}$ Timeout Error Enables or disables an interrupt request to the CPU when a timeout error has occurred. 0: Disables the interrupt request to the CPU by an R/$\overline{B}$ timeout error 1: Enables the interrupt request to the CPU by an R/$\overline{B}$ timeout error

chanhvinh.com

Bit	Bit Name	Initial Value	R/W	Description
2	TEINTE	0	R/W	Transfer End Interrupt Enable Enables or disables an interrupt request to the CPU when a transfer has been ended (TREND bit in FLTRCR). 0: Disables the transfer end interrupt request to the CPU 1: Enables the transfer end interrupt request to the CPU
1	TRINTE1	0	R/W	FLECFIFO Transfer Request Enable to CPU Enables or disables an interrupt request to the CPU by a transfer request issued from FLECFIFO. 0: Disables an interrupt request to the CPU by a transfer request from FLECFIFO. 1: Enables an interrupt request to the CPU by a transfer request from FLECFIFO. When the DMA transfer is enabled, this bit should be cleared to 0.
0	TRINTE0	0	R/W	FLDTFIFO Transfer Request Enable to CPU Enables or disables an interrupt request to the CPU by a transfer request issued from FLDTFIFO. 0: Disables an interrupt request to the CPU by a transfer request from FLDTFIFO 1: Enables an interrupt request to the CPU by a transfer request from FLDTFIFO When the DMA transfer is enabled, this bit should be cleared to 0.

Note: * Only 0 can be written to these bits.

chanhvinh.com

28.3.9 Ready Busy Timeout Setting Register (FLBSYTMR)

FLBSYTMR is a 32-bit readable/writable register that specifies the timeout time when the FRB pin is busy.

Bit:	31	30	29	28	27	26	25	24	23	22	21	20	19	18	17	16
	-	-	-	-	-	-	-	-	-	-	-	-	RBTMOUT[19:16]			
Initial value:	0	0	0	0	0	0	0	0	0	0	0	0	0	0	0	0
R/W:	R	R	R	R	R	R	R	R	R	R	R	R	R/W	R/W	R/W	R/W

Bit:	15	14	13	12	11	10	9	8	7	6	5	4	3	2	1	0
	RBTMOUT[15:0]															
Initial value:	0	0	0	0	0	0	0	0	0	0	0	0	0	0	0	0
R/W:	R/W	R/W	R/W	R/W	R/W	R/W	R/W	R/W	R/W	R/W	R/W	R/W	R/W	R/W	R/W	R/W

Bit	Bit Name	Initial Value	R/W	Description
31 to 20	—	All 0	R	Reserved These bits are always read as 0. The write value should always be 0.
19 to 0	RBTMOUT [19:0]	H'00000	R/W	Ready Busy Timeout Specify timeout time (the number of Pϕ clocks) in busy state. When these bits are set to 0, timeout is not generated.

chanhvinh.com

28.3.10 Ready Busy Timeout Counter (FLBSYCNT)

FLBSYCNT is a 32-bit read-only register.

The status of flash memory obtained by the status read is stored in the bits STAT[7:0].

The timeout time set in the bits RBTMOUT[19:0] in FLBSYTMR is copied to the bits RBTIMCNT[19:0] and counting down is started when the FRB pin is placed in a busy state. When values in the RBTIMCNT[19:0] become 0, 1 is set to the BTOERB bit in FLINTDMACR, thus notifying that a timeout error has occurred. In this case, an FLSTE interrupt request can be issued if an interrupt is enabled by the RBERINTE bit in FLINTDMACR.

Bit:	31	30	29	28	27	26	25	24	23	22	21	20	19	18	17	16
	STAT[7:0]								-	-	-	-	RBTIMCNT[19:16]			
Initial value:	0	0	0	0	0	0	0	0	0	0	0	0	0	0	0	0
R/W:	R	R	R	R	R	R	R	R	R	R	R	R	R	R	R	R

Bit:	15	14	13	12	11	10	9	8	7	6	5	4	3	2	1	0
	RBTIMCNT[15:0]															
Initial value:	0	0	0	0	0	0	0	0	0	0	0	0	0	0	0	0
R/W:	R	R	R	R	R	R	R	R	R	R	R	R	R	R	R	R

Bit	Bit Name	Initial Value	R/W	Description
31 to 24	STAT[7:0]	All 0	R	Indicate the flash memory status obtained by the status read.
23 to 20	—	All 0	R	Reserved These bits are always read as 0.
19 to 0	RBTIMCNT[19:0]	H'00000	R	Ready Busy Timeout Counter When the FRB pin is placed in a busy state, the values of the bits RBTMOUT[19:0] in FLBSYTMR are copied to these bits. These bits are counted down while the FRB pin is busy. A timeout error occurs when these bits are decremented to 0.

chanhvinh.com

28.3.11 Data FIFO Register (FLDTFIFO)

FLDTFIFO is used to read or write the data FIFO area.

In DMA transfer, this register must be specified as the destination or source.

Note that the direction of read or write specified by the SELRW bit in FLCMDCR must match that specified in this register. When changing the read/write direction, FLDTFIFO should be cleared by setting the AC0CLR bit in FLINTDMACR before use.

Bit:	31	30	29	28	27	26	25	24	23	22	21	20	19	18	17	16
	DTFO[31:16]															
Initial value:	Undefined	Undefined	Undefined	Undefined	Undefined	Undefined	Undefined	Undefined	Undefined	Undefined	Undefined	Undefined	Undefined	Undefined	Undefined	Undefined
R/W:	R/W	R/W	R/W	R/W	R/W	R/W	R/W	R/W	R/W	R/W	R/W	R/W	R/W	R/W	R/W	R/W

Bit:	15	14	13	12	11	10	9	8	7	6	5	4	3	2	1	0
	DTFO[15:0]															
Initial value:	Undefined	Undefined	Undefined	Undefined	Undefined	Undefined	Undefined	Undefined	Undefined	Undefined	Undefined	Undefined	Undefined	Undefined	Undefined	Undefined
R/W:	R/W	R/W	R/W	R/W	R/W	R/W	R/W	R/W	R/W	R/W	R/W	R/W	R/W	R/W	R/W	R/W

Bit	Bit Name	Initial Value	R/W	Description
31 to 0	DTFO [31:0]	H'xxxxxxxx	R/W	Data FIFO Area Read/Write Data In write: Data in this register is written to the data FIFO area. In read: Data read from the data FIFO area is stored in this register.

chanhvinh.com

28.3.12 Control Code FIFO Register (FLECFIFO)

FLECFIFO is used to read or write the control code FIFO area.

In DMA transfer, data in this register must be specified as the destination (source).

Note that the direction of read or write specified by the SELRW bit in FLCMDCR must match that specified in this register. When changing the read/write direction, FLECFIFO should be cleared by setting the AC1CLR bit in FLINTDMACR before use.

Bit:	31	30	29	28	27	26	25	24	23	22	21	20	19	18	17	16
	ECFO[31:16]															
Initial value:	Undefined	Undefined	Undefined	Undefined	Undefined	Undefined	Undefined	Undefined	Undefined	Undefined	Undefined	Undefined	Undefined	Undefined	Undefined	Undefined
R/W:	R/W	R/W	R/W	R/W	R/W	R/W	R/W	R/W	R/W	R/W	R/W	R/W	R/W	R/W	R/W	R/W

Bit:	15	14	13	12	11	10	9	8	7	6	5	4	3	2	1	0
	ECFO[15:0]															
Initial value:	Undefined	Undefined	Undefined	Undefined	Undefined	Undefined	Undefined	Undefined	Undefined	Undefined	Undefined	Undefined	Undefined	Undefined	Undefined	Undefined
R/W:	R/W	R/W	R/W	R/W	R/W	R/W	R/W	R/W	R/W	R/W	R/W	R/W	R/W	R/W	R/W	R/W

Bit	Bit Name	Initial Value	R/W	Description
31 to 0	ECFO [31:0]	H'xxxxxxxx	R/W	Control Code FIFO Area Read/Write Data In write: Data in this register is written to the control code FIFO area. In read: Data read from the control code FIFO area is stored in this register.

chanhvinh.com

28.3.13 Transfer Control Register (FLTRCR)

Setting the TRSTRT bit to 1 initiates access to flash memory. Access completion can be checked by the TREND bit. During the transfer (from when the TRSTRT bit is set to 1 until the TREND bit is set to 1), the processing should not be forcibly ended (by setting the TRSTRT bit to 0).

When reading from flash memory, TREND is set when reading from flash memory have been finished. However, if there is any read data remaining in the FIFO, the processing should not be forcibly ended until all data has been read from the FIFO. While this module has the external bus mastership and transfer is in progress, the SLEEP instruction should not be executed until the TREND bit is set and transfer is completed.

Bit:	7	6	5	4	3	2	1	0
	-	-	-	-	-	TRSTAT	TREND	TRSTRT
Initial value:	0	0	0	0	0	0	0	0
R/W:	R	R	R	R	R	R	R/W	R/W

Bit	Bit Name	Initial Value	R/W	Description
7 to 3	—	All 0	R	Reserved These bits are always read as 0. The write value should always be 0.
2	TRSTAT	0	R	Transfer State Indicates that this module has acquired the external bus mastership and that transfer is actually being performed. 0: Transfer has not been started. 1: Transfer is in progress or transfer has ended.
1	TREND	0	R/W	Processing End Flag Bit Indicates that the processing performed in the specified access mode has been completed. The write value should always be 0.
0	TRSTRT	0	R/W	Transfer Start By setting this bit from 0 to 1 when the TREND bit is 0, processing in the access mode specified by the access mode specification bits ACM[1:0] is initiated. 0: Stops transfer 1: Starts transfer

chanhvinh.com

28.3.14 Bus Hold Time Setting Register (FLHOLDCR)

FLHOLDCR specifies the external bus release frequency if any other module (including the CPU) accesses a memory under the control of the bus state controller while this module is writing to or reading from the flash memory in sector access mode. With the HOLDEN bit = 0 in this register, this module holds the external bus during transfers between the flash memory and this LSI. Note that this may cause a deadlock depending on the program code and transfer data location and usage.

Bit:	31	30	29	28	27	26	25	24	23	22	21	20	19	18	17	16
	-	-	-	-	-	-	-	-	-	-	-	-	-	-	-	-
Initial value:	0	0	0	0	0	0	0	0	0	0	0	0	0	0	0	0
R/W:	R	R	R	R	R	R	R	R	R	R	R	R	R	R	R	R

Bit:	15	14	13	12	11	10	9	8	7	6	5	4	3	2	1	0
	-	-	-	-	-	-	-	-	-	-	-	-	-	-	-	HOLDEN
Initial value:	0	0	0	0	0	0	0	0	0	0	0	0	0	0	0	0
R/W:	R	R	R	R	R	R	R	R	R	R	R	R	R	R	R	R/W

Bit	Bit Name	Initial Value	R/W	Description
31 to 1	—	All 0	R	Reserved These bits are always read as 0. The write value should always be 0.
0	HOLDEN	0	R/W	Bus Hold Enable Specifies whether to release the external bus mastership during write to or read from the flash memory in sector access mode. 0: Holds the bus mastership during transfers. 1: Releases the bus mastership during transfers if the FIFO empty or full state is entered in sector access mode. Note: When using the FIFO in command access mode, store the control program for this module and transfer data in the on-chip RAM.

chanhvinh.com

28.4 Operation

28.4.1 Access Sequence

This module performs accesses in several independent stages.

For example, NAND-type flash memory programming consists of the following five stages.

- First command issue stage (program setup command)
- Address issue stage (program address)
- Data stage (output)
- Second command issue stage (program start command)
- Status read stage

NAND-type flash memory programming access is achieved by executing these five stages sequentially. An access to flash memory is completed at the end of the final stage (status read stage).

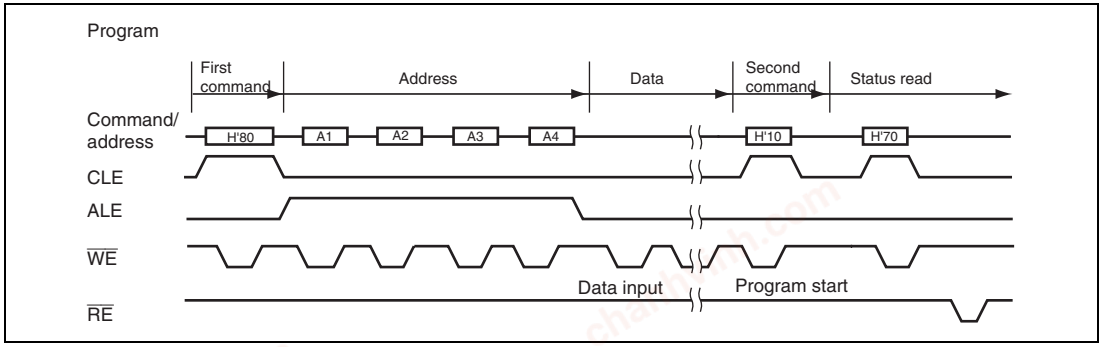

Figure 28.2 Programming Operation for NAND-Type Flash Memory and Stages

For details on NAND-type flash memory read operation, see section 28.4.4, Command Access Mode.

28.4.2 Operating Modes

Two operating modes are supported.

- Command access mode
- Sector access mode

The ECC generation and error check are performed in sector access mode.

chanhvinh.com

28.4.3 Register Setting Procedure

Figure 28.3 shows the register setting flow required for accessing the flash memory.

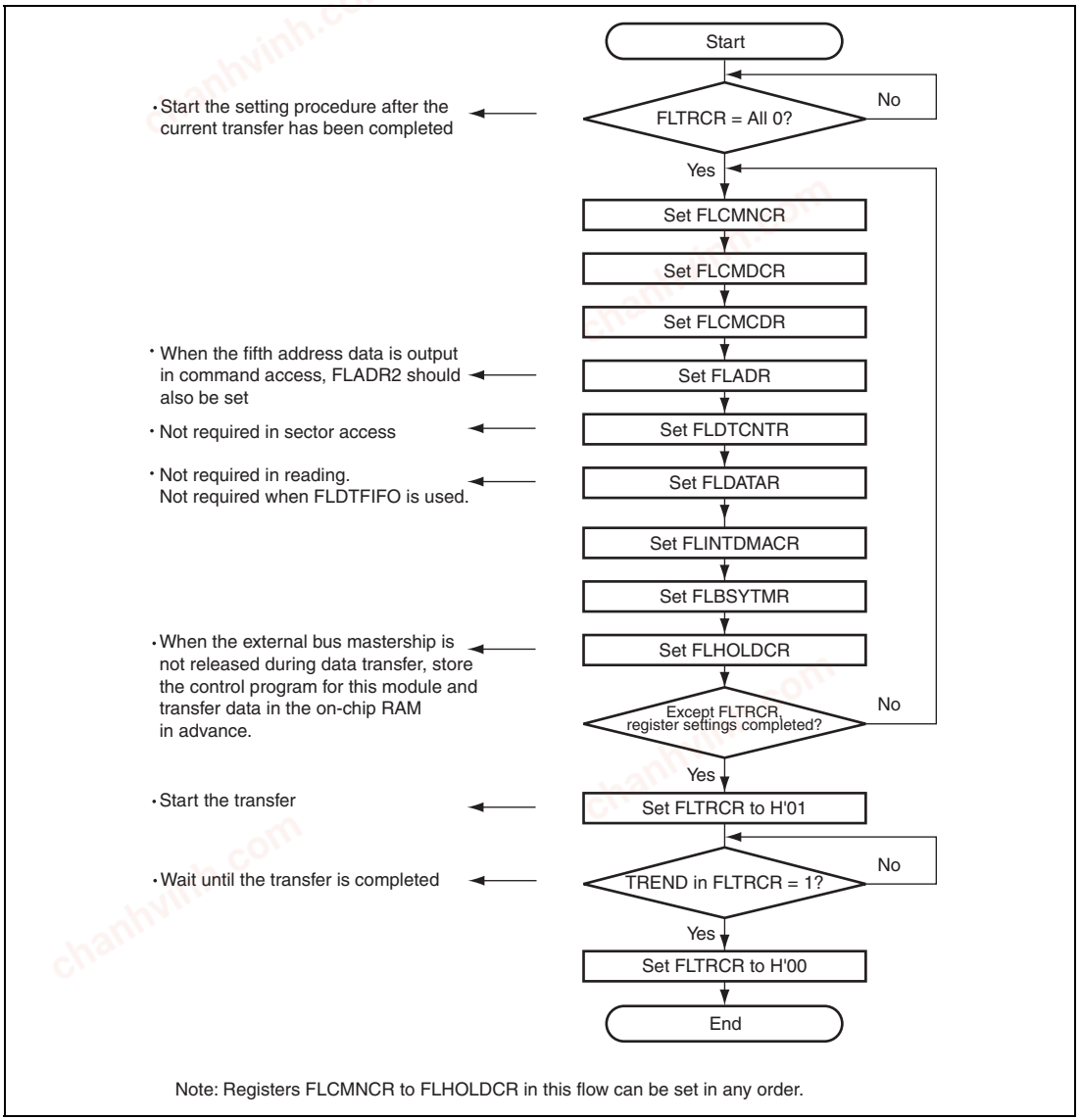

Note: Registers FLCMNCR to FLHOLDCR in this flow can be set in any order.

Figure 28.3 Register Setting Flow

chanhvinh.com

28.4.4 Command Access Mode

Command access mode accesses flash memory by specifying a command to be issued to flash memory, address, data, read/write direction, and number of times to the registers. In this mode, I/O data can be transferred by the DMA via FLDTFIFO.

(1) NAND-Type Flash Memory Access

Figure 28.4 shows an example of read operation for NAND-type flash memory. In this example, the first command is specified as H'00, address data length is specified as 3 bytes, and the number of read bytes is specified as 8 bytes in the data counter.

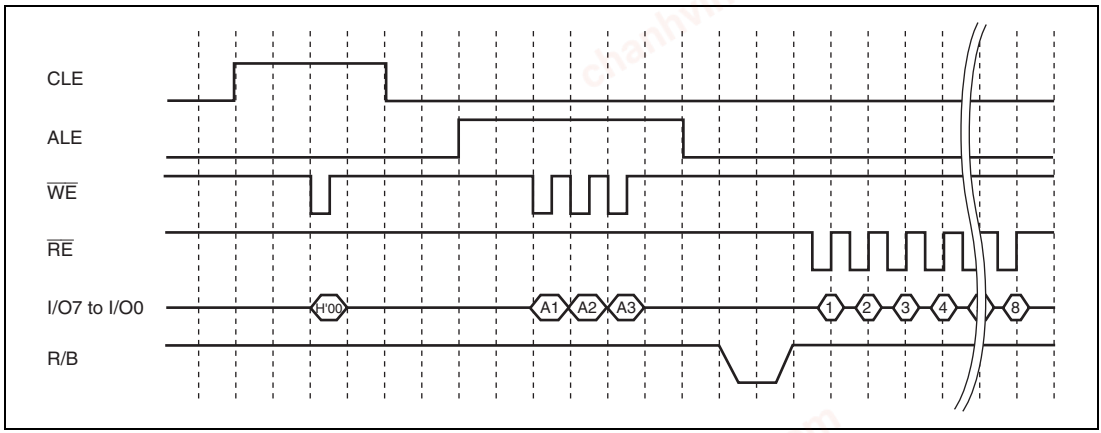

Figure 28.4 Read Operation Timing for NAND-Type Flash Memory

chanhvinh.com

Figures 28.5 and 28.6 show examples of programming operation for NAND-type flash memory.

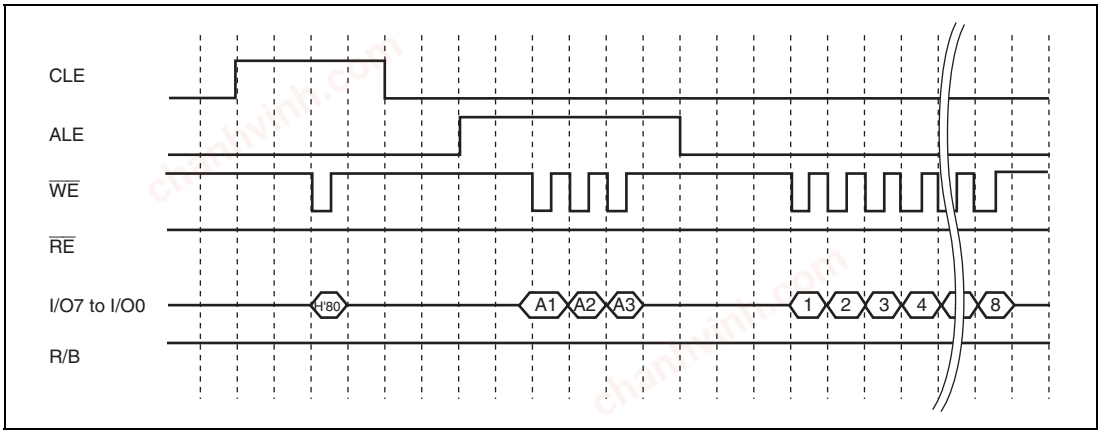

Figure 28.5 Programming Operation Timing for NAND-Type Flash Memory (1)

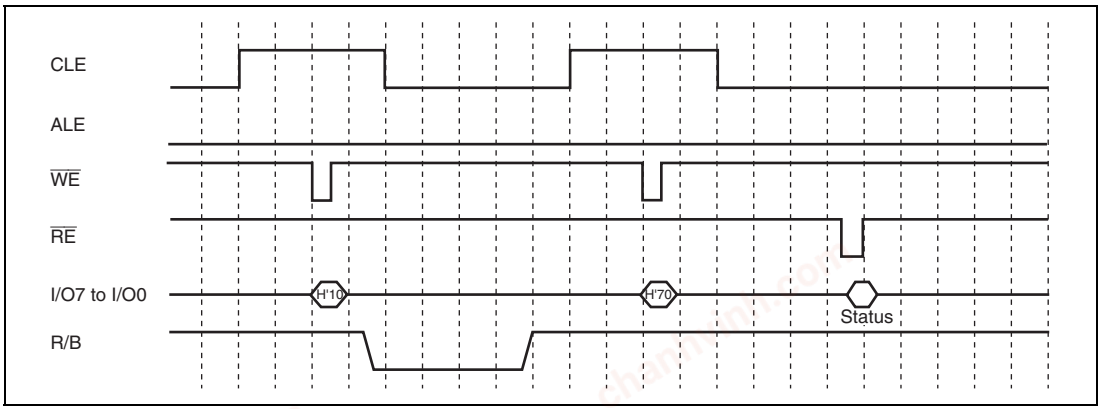

Figure 28.6 Programming Operation Timing for NAND-Type Flash Memory (2)

chanhvinh.com

(2) NAND-Type Flash Memory (2048 + 64 Bytes) Access

Figure 28.7 shows an example of read operation for NAND-type flash memory (2048 + 64 bytes). In this example, the first command is specified as H'00, the second command is specified as H'30, and address data length is specified as 4 bytes. The number of read bytes is specified as 4 bytes in the data counter.

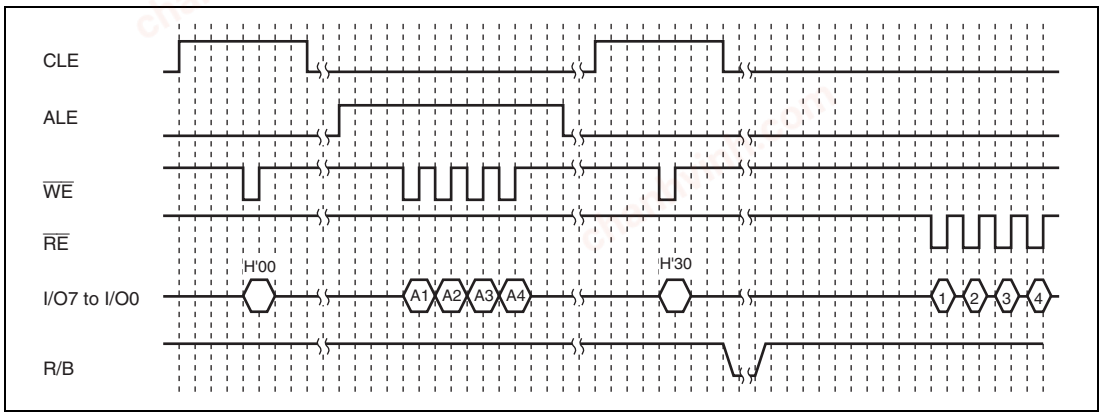

Figure 28.7 Read Operation Timing for NAND-Type Flash Memory

Figures 28.8 and 28.9 show examples of programming operation for NAND-type flash memory (2048 + 64 bytes).

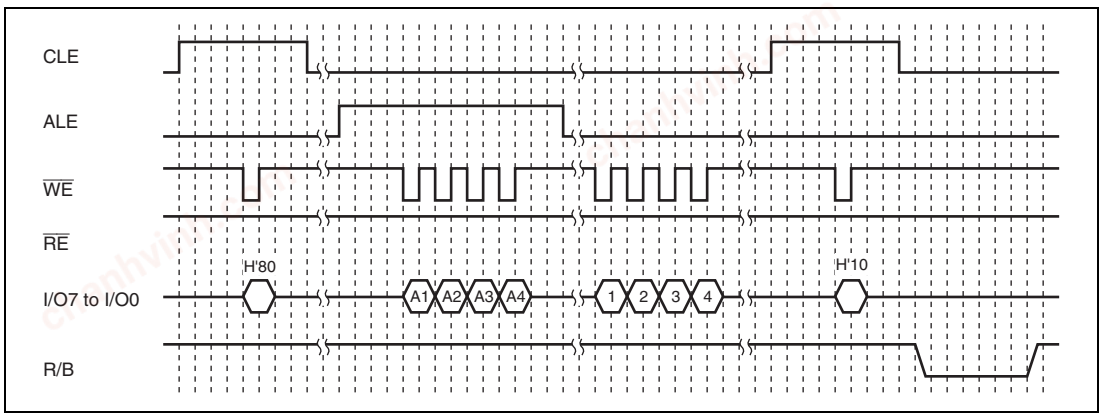

Figure 28.8 Programming Operation Timing for NAND-Type Flash Memory (1)

chanhvinh.com

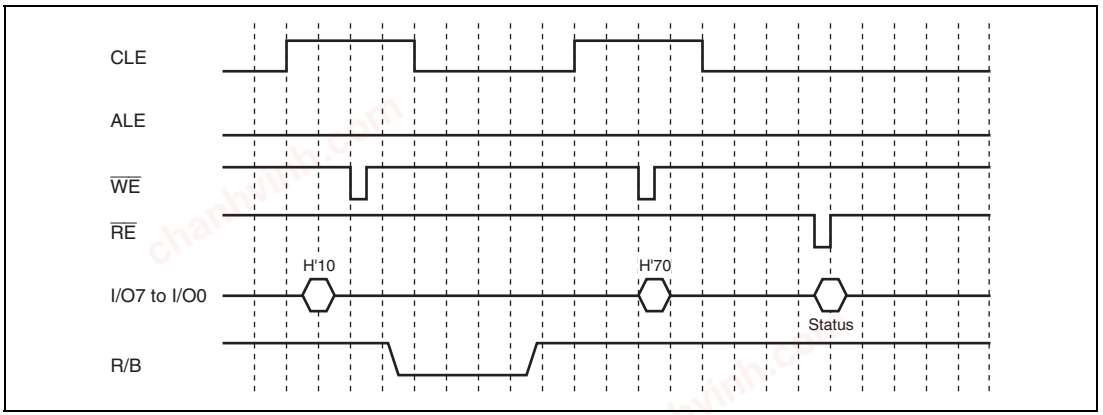

Figure 28.9 Programming Operation Timing for NAND-Type Flash Memory (2)

chanhvinh.com

28.4.5 Sector Access Mode

In sector access mode, flash memory can be read or programmed in sector units by specifying the sector number of the sector to be accessed.

Since 512-byte data is stored in FLDTFIFO and 16-byte control code is stored in FLECFIFO, the DREQ1EN and DREQ0EN bits in FLINTDMACR can be set to transfer by the DMA.

Figure 28.10 shows the relationship of DMA transfer between sectors in flash memory (data and control code) and memory on the address space.

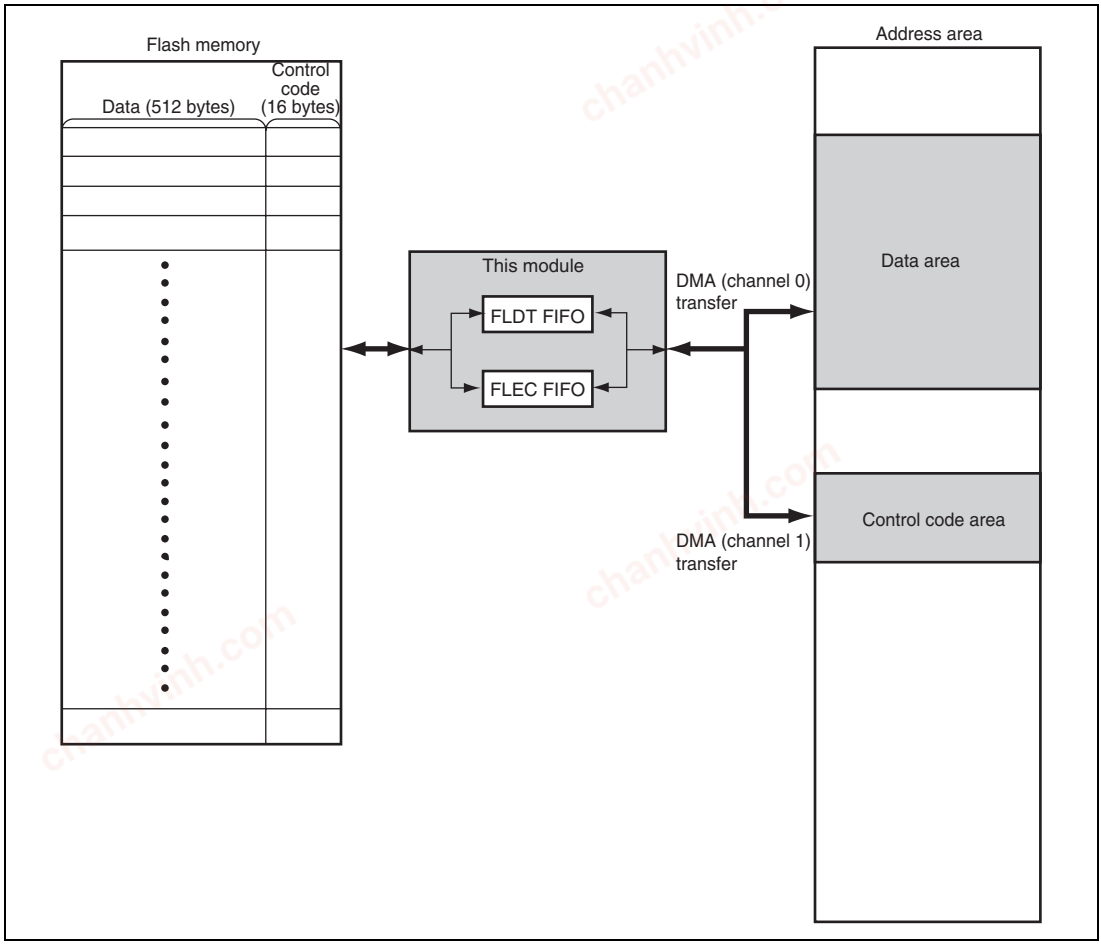

Figure 28.10 Relationship between DMA Transfer and Sector (Data and Control Code), and Memory and DMA Transfer

chanhvinh.com

(1) Sector Address

Figure 28.11 shows the relationship between the physical sector address of NAND-type flash memory and the address of flash memory.

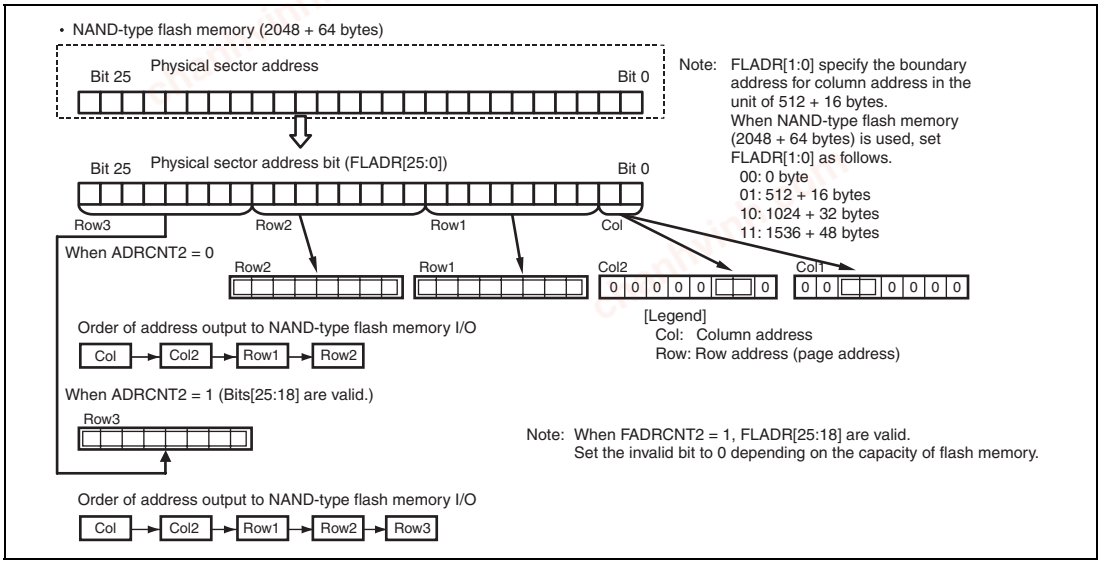

Figure 28.11 Relationship between Sector Number and Address Expansion of NAND-Type Flash Memory

chanhvinh.com

(2) Continuous Sector Access

A series of sectors can be read or written by specifying the start sector address of NAND-type flash memory and the number of sectors to be transferred. Figure 28.12 shows an example of physical sector specification register and transfer count specification register settings when transferring logical sectors 0 to 40, which are not contiguous because of an unusable sector in NAND-type flash memory.

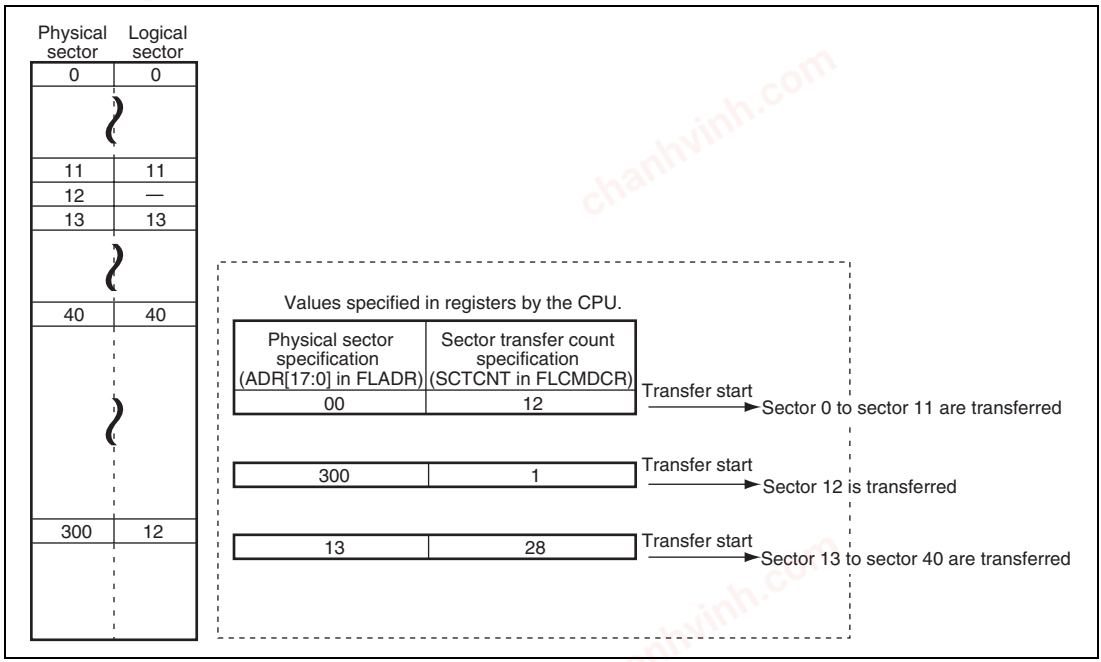

Figure 28.12 Sector Access when Unusable Sector Exists in Continuous Sectors

chanhvinh.com

(3) Flash Memory Access in Sector Access Mode

Figures 28.13 and 28.14 show the timing of writing to and reading from the NAND-type flash memory in sector access mode.

Figure 28.13 shows the timing of writing to the 1-Gbit large-block flash memory. During the execution of sequential sector access spanning multiple pages, data are written to the flash memory with the timing shown in the figure for every page (2048 + 64 bytes).

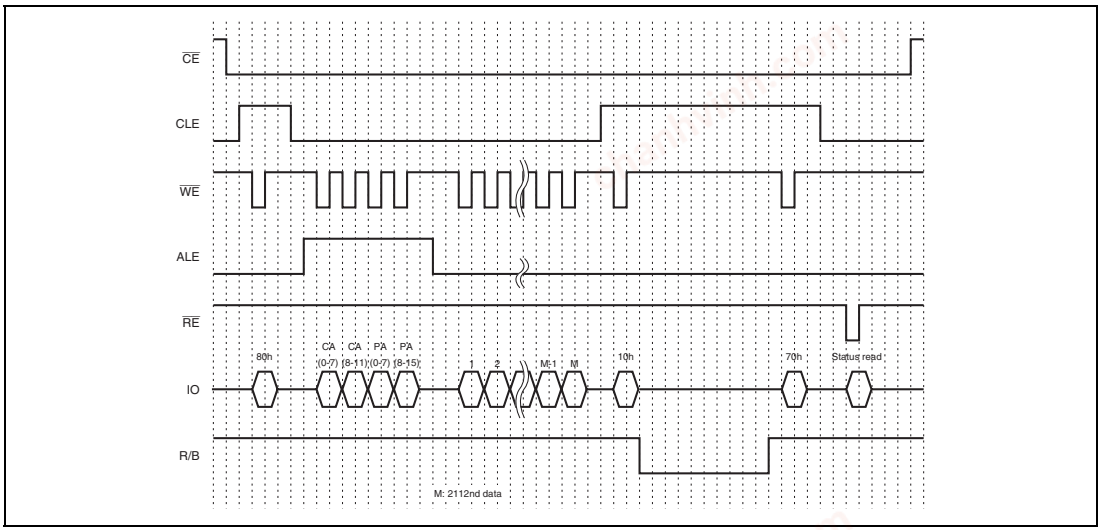

Figure 28.13 Programming Operation Timing for NAND-Type Flash Memory

chanhvinh.com

Figure 28.14 shows the timing of reading from the 1-Gbit large-block flash memory. During the execution of sequential sector access spanning multiple pages, data are read from the flash memory with the timing shown in the figure for every page (2048 + 64 bytes).

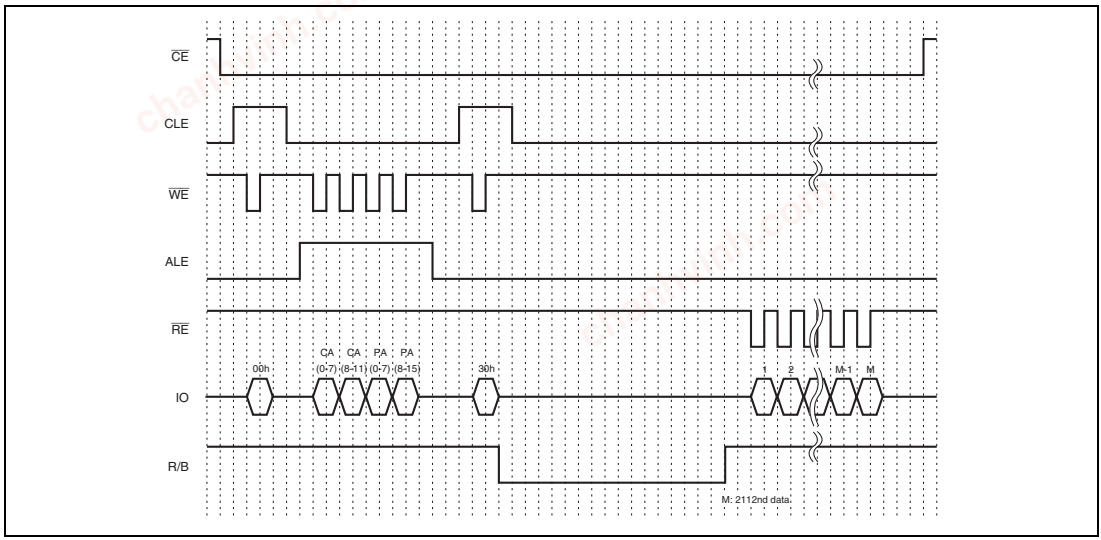

Figure 28.14 Read Timing from NAND-Type Flash Memory (Sector Access Mode)

chanhvinh.com

28.4.6 Status Read

This module can read the status register of an AND/NAND-type flash memory. The data in the status register is input through the I/O7 to I/O0 pins and stored in the bits STAT[7:0] in FLBSYCNT, which can be read by the CPU. If a program error or erase error is detected when the status register value is stored in the bits STAT[7:0] in FLBSYCNT, the STERB bit in FLINTDMACR is set to 1 and generates an interrupt to the CPU if the STERINTE bit in FLINTDMACR is enabled. If a status error occurs during continuous sector access, the TREND bit in FLTRCR is set to 1 and the procedure stops.

(1) Status Read of NAND-Type Flash Memory

The status register of NAND-type flash memory can be read by inputting command H'70 to NAND-type flash memory. If programming is executed in command access mode or sector access mode while the DOSR bit in FLCMDCR is set to 1, this module automatically inputs command H'70 to NAND-type flash memory and reads the status register of NAND-type flash memory. When the status register of NAND-type flash memory is read, the I/O7 to I/O0 pins indicate the following information as described in table 28.3.

Table 28.3 Status Read of NAND-Type Flash Memory

I/O	Status (definition)	Description
I/O7	Program protection	0: Cannot be programmed 1: Can be programmed
I/O6	Ready/busy	0: Busy state 1: Ready state
I/O5 to I/O1	Reserved	—
I/O0	Program/erase	0: Pass 1: Fail

chanhvinh.com

28.5 Interrupt Sources

This module has five interrupt sources: Status error, ready/busy timeout error, transfer end, FIFO0 transfer request, and FIFO1 transfer request. Each of the interrupt sources has its corresponding interrupt flag and the interrupt can be requested independently to the CPU if the interrupt is enabled by the interrupt enable bit. Note that the status error and ready/busy timeout error use the common FLSTE interrupt to the CPU.

Table 28.4 NAND Flash Memory Controller Interrupt Requests

Interrupt Source	Interrupt Flag	Enable Bit	Description	Priority
FLSTE interrupt	STERB	STERINTE	Status error	High
	BTOERB	RBERINTE	Ready/busy timeout error	
FLTEND interrupt	TREND	TEINTE	Transfer end	
FLTRQ0 interrupt	TRREQF0	TRINTE0	FIFO0 transfer request	
FLTRQ1 interrupt	TRREQF1	TRINTE1	FIFO1 transfer request	Low

28.6 DMA Transfer Specifications

This module can request DMA transfers separately to the data area FLDTFIFO and control code area FLECFIFO. Table 28.5 summarizes DMA transfer enable or disable states in each access mode.

Table 28.5 DMA Transfer Specifications

	Sector Access Mode	Command Access Mode
FLDTFIFO	DMA transfer enabled	DMA transfer enabled
FLECFIFO	DMA transfer enabled	DMA transfer disabled

For details on settings of the direct memory access controller, see section 11, Direct Memory Access Controller.

chanhvinh.com

28.7 Usage Notes

28.7.1 External Bus Mastership Release Timing

This module negates $\overline{FCE}$ regardless of the busy/ready state when having completed a necessary process. With bit 21 (BUSYON) set to 0 in the common control register (FLCMNCR), this module negates $\overline{FCE}$ and releases the bus mastership even during the busy state upon completion of the process. With BUSYON = 0, setting bit 24 (DOSR) in the command control register (FLCMDCR) to 1 to read the status enables acquiring the bus mastership even during the busy state.

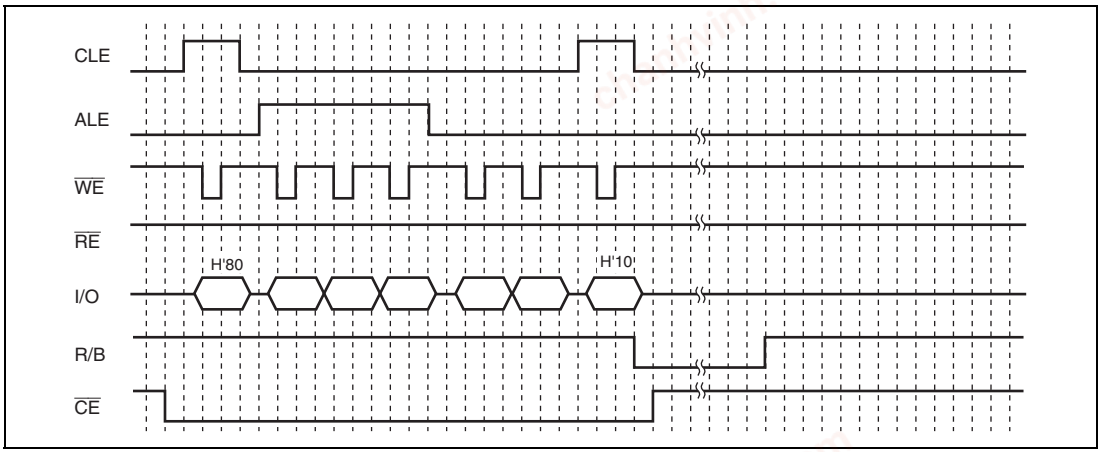

Figure 28.15 BUSYON = 0, DOSR = 0 (Writing to Flash Memory)

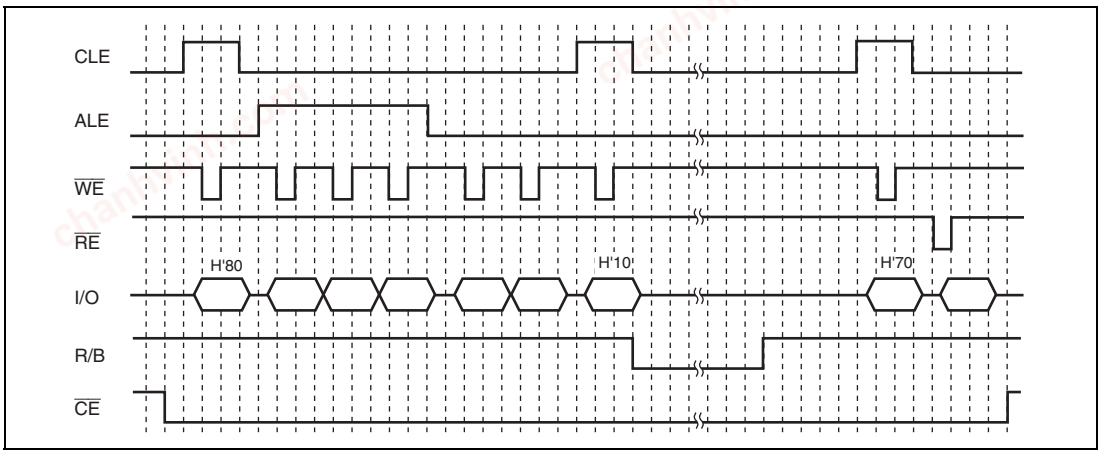

Figure 28.16 BUSYON = 0, DOSR = 1 (Writing to Flash Memory)

chanhvinh.com

28.7.2 Usage Notes for the SNAND Bit

When using the SNAND bit in FLCMNCR, only the first command or the second command is corresponded in spite of the setting of the DOCMD1 or DOCMD2 bit in FLCMDCR.

When no command or only the first command is issued, 0 should be written in the SNAND bit.

chanhvinh.com

chanhvinh.com
chanhvinh.com
chanhvinh.com

chanhvinh.com

Section 29 USB 2.0 Host/Function Module

The USB 2.0 host/function module is a USB controller which provides capabilities as a USB host controller and USB function controller function. This module supports high-speed transfer defined by USB (universal serial bus) Specification 2.0, full-speed transfer, and low-speed transfer when used as the host controller, and supports high-speed transfer and full-speed transfer when used as the function controller. This module has a USB transceiver and supports all of the transfer types defined by the USB specification.

This module has an 8-Kbyte buffer memory for data transfer, providing a maximum of ten pipes. Any endpoint numbers can be assigned to PIPE1 to PIPE9, based on the peripheral devices or user system for communication.

29.1 Features

(1) Host Controller and Function Controller Supporting USB High-Speed Operation

- The USB host controller and USB function controller are incorporated.
- The USB host controller and USB function controller can be switched by register settings.
- USB transceiver is incorporated.

(2) Reduced Number of External Pins and Space-Saving Installation

- On-chip D+ pull-up resistor (during USB function operation)
- On-chip D+ and D- pull-down resistor (during USB host operation)
- On-chip D+ and D- terminal resistor (during high-speed operation)
- On-chip D+ and D- output resistor (during full-speed operation)

(3) All Types of USB Transfers Supported

- Control transfer
- Bulk transfer
- Interrupt transfer (high bandwidth transfers not supported)
- Isochronous transfer (high bandwidth transfers not supported)

chanhvinh.com

(4) Internal Bus Interfaces

- Two DMA interface channels are incorporated.

(5) Pipe Configuration

- On-chip 8-Kbyte buffer memory for USB communications
- Up to ten pipes can be selected (including the default control pipe)
- Programmable pipe configuration
- Endpoint numbers can be assigned flexibly to PIPE1 to PIPE9.
- Transfer conditions that can be set for each pipe:

PIPE0:	Control transfer (default control pipe: DCP), 64-byte fixed single buffer
PIPE1 and PIPE2:	Bulk transfers/isochronous transfer, continuous transfer mode, programmable buffer size (up to 2-Kbytes: double buffer can be specified)
PIPE3 to PIPE5:	Bulk transfer, continuous transfer mode, programmable buffer size (up to 2-Kbytes: double buffer can be specified)
PIPE6 to PIPE9:	Interrupt transfer, 64-byte fixed single buffer

(6) Features of the USB Host Controller

- High-speed transfer (480 Mbps), full-speed transfer (12 Mbps), and low-speed transfer (1.5 Mbps) are supported.
- Communications with multiple peripheral devices connected via a single HUB
- Automatic response to the reset handshake
- Automatic scheduling for SOF and packet transmissions
- Programmable intervals for isochronous and interrupt transfers

(7) Features of the USB Function Controller

- Both high-speed transfer (480 Mbps) and full-speed transfer (12 Mbps) are supported.
- Automatic recognition of high-speed operation or full-speed operation based on automatic response to the reset handshake
- Control transfer stage control function
- Device state control function
- Auto response function for SET_ADDRESS request
- NAK response interrupt function (NRDY)
- SOF interpolation function

chanhvinh.com

(8) Other Features

- Transfer ending function using transaction count
- BRDY interrupt event notification timing change function (BFRE)
- Function that automatically clears the buffer memory after the data for the pipe specified at the DnFIFO (n = 0 or 1) port has been read (DCLRM)
- NAK setting function for response PID generated by end of transfer (SHTNAK)

29.2 Input/Output Pins

Table 29.1 shows the pin configuration of the USB.

Table 29.1 USB Pin Configuration

Category	Name	Pin Name	I/O	Function
USB bus interface	USB D+ data	DP	I/O	D+ I/O of the USB on-chip transceiver This pin should be connected to the D+ pin of the USB bus.
	USB D- data	DM	I/O	D− I/O of the USB on-chip transceiver This pin should be connected to the D- pin of the USB bus.
VBUS monitor input	VBUS input	VBUS	Input	USB cable connection monitor pin This pin should be connected directly to the VBUS of the USB bus. Whether the VBUS is connected or disconnected can be detected. If this pin is not connected with the VBUS of the USB bus, it should be supplied with 5 V. It should be supplied with 5 V also when the host controller function is selected. Note: The VBUS cannot be supplied to connected peripheral devices.
Reference resistor	Reference input	REFRIN	Input	Reference resistor connection pin This pin should be connected to USBAPVss through a 5.6 kΩ ±1% resistor.
Clock	Crystal resonator for USB/external clock	USB_X1	Input	This pin should be connected to crystal resonator for the USB. This pin can also be used for external clock input.
		USB_X2	Output	

chanhvinh.com

Category	Name	Pin Name	I/O	Function
Power supply	Transceiver block analog pin power supply	USBAPVcc	Input	Power supply for pins
	Transceiver block analog pin ground*	USBAPVss	Input	Ground for pins
	Transceiver block digital pin power supply*	USBDPVcc	Input	Power supply for pins
	Transceiver block digital pin ground*	USBDPVss	Input	Ground for pins
	Transceiver block analog core power supply	USBAVcc	Input	Power supply for the core
	Transceiver block analog core ground*	USBAVss	Input	Ground for the core
	Transceiver block digital core power supply*	USBDVcc	Input	Power supply for the core
	Transceiver block digital core ground*	USBDVss	Input	Ground for the core
	USB 480 MHz power supply*	USBUVcc	Input	Power supply for 480-MHz operation block
	USB 480 MHz ground*	USBUVss	Input	Ground for 480-MHz operation block

Note: * SH7269 (BGA) Group products do not have this pin.

chanhvinh.com

29.3 Register Description

Table 29.2 shows the register configuration.

Table 29.2 Register Configuration

Register Name	Abbreviation	R/W	Address	Access Size
System configuration control register	SYSCFG	R/W	H'E801 0000	16
CPU bus wait setting register	BUSWAIT	R/W	H'E801 0002	16
System configuration status register	SYSSTS	R	H'E801 0004	16
Device state control register	DVSTCTR	R/W	H'E801 0008	16
Test mode register	TESTMODE	R/W	H'E801 000C	16
DMA0-FIFO bus configuration register	D0FBCFG	R/W	H'E801 0010	16
DMA1-FIFO bus configuration register	D1FBCFG	R/W	H'E801 0012	16
CFIFO port register	CFIFO	R/W	H'E801 0014	8, 16, 32
D0FIFO port register	D0FIFO	R/W	H'E801 0018	8, 16, 32
D1FIFO port register	D1FIFO	R/W	H'E801 001C	8, 16, 32
CFIFO port select register	CFIFOSEL	R/W	H'E801 0020	16
CFIFO port control register	CFIFOCTR	R/W	H'E801 0022	16
D0FIFO port select register	D0FIFOSEL	R/W	H'E801 0028	16
D0FIFO port control register	D0FIFOCTR	R/W	H'E801 002A	16
D1FIFO port select register	D1FIFOSEL	R/W	H'E801 002C	16
D1FIFO port control register	D1FIFOCTR	R/W	H'E801 002E	16
Interrupt enable register 0	INTENB0	R/W	H'E801 0030	16
Interrupt enable register 1	INTENB1	R/W	H'E801 0032	16
BRDY interrupt enable register	BRDYENB	R/W	H'E801 0036	16
NRDY interrupt enable register	NRDYENB	R/W	H'E801 0038	16
BEMP interrupt enable register	BEMPENB	R/W	H'E801 003A	16
SOF output configuration register	SOFCFG	R/W	H'E801 003C	16
Interrupt status register 0	INTSTS0	R/W	H'E801 0040	16
Interrupt status register 1	INTSTS1	R/W	H'E801 0042	16

chanhvinh.com

Register Name	Abbreviation	R/W	Address	Access Size
BRDY interrupt status register	BRDYSTS	R/W	H'E801 0046	16
NRDY interrupt status register	NRDYSTS	R/W	H'E801 0048	16
BEMP interrupt status register	BEMPSTS	R/W	H'E801 004A	16
Frame number register	FRMNUM	R/W	H'E801 004C	16
μFrame number register	UFRMNUM	R	H'E801 004E	16
USB address register	USBADDR	R	H'E801 0050	16
USB request type register	USBREQ	R/W	H'E801 0054	16
USB request value register	USBVAL	R/W	H'E801 0056	16
USB request index register	USBINDX	R/W	H'E801 0058	16
USB request length register	USBLENG	R/W	H'E801 005A	16
DCP configuration register	DCPCFG	R/W	H'E801 005C	16
DCP maximum packet size register	DCPMAXP	R/W	H'E801 005E	16
DCP control register	DCPCTR	R/W	H'E801 0060	16
Pipe window select register	PIPESEL	R/W	H'E801 0064	16
Pipe configuration register	PIPECFG	R/W	H'E801 0068	16
Pipe buffer setting register	PIPEBUF	R/W	H'E801 006A	16
Pipe maximum packet size register	PIPEMAXP	R/W	H'E801 006C	16
Pipe cycle control register	PIPEPERI	R/W	H'E801 006E	16
Pipe 1 control register	PIPE1CTR	R/W	H'E801 0070	16
Pipe 2 control register	PIPE2CTR	R/W	H'E801 0072	16
Pipe 3 control register	PIPE3CTR	R/W	H'E801 0074	16
Pipe 4 control register	PIPE4CTR	R/W	H'E801 0076	16
Pipe 5 control register	PIPE5CTR	R/W	H'E801 0078	16
Pipe 6 control register	PIPE6CTR	R/W	H'E801 007A	16
Pipe 7 control register	PIPE7CTR	R/W	H'E801 007C	16
Pipe 8 control register	PIPE8CTR	R/W	H'E801 007E	16
Pipe 9 control register	PIPE9CTR	R/W	H'E801 0080	16
Pipe 1 transaction counter enable register	PIPE1TRE	R/W	H'E801 0090	16
Pipe 1 transaction counter register	PIPE1TRN	R/W	H'E801 0092	16
Pipe 2 transaction counter enable register	PIPE2TRE	R/W	H'E801 0094	16

chanhvinh.com

Register Name	Abbreviation	R/W	Address	Access Size
Pipe 2 transaction counter register	PIPE2TRN	R/W	H'E801 0096	16
Pipe 3 transaction counter enable register	PIPE3TRE	R/W	H'E801 0098	16
Pipe 3 transaction counter register	PIPE3TRN	R/W	H'E801 009A	16
Pipe 4 transaction counter enable register	PIPE4TRE	R/W	H'E801 009C	16
Pipe 4 transaction counter register	PIPE4TRN	R/W	H'E801 009E	16
Pipe 5 transaction counter enable register	PIPE5TRE	R/W	H'E801 00A0	16
Pipe 5 transaction counter register	PIPE5TRN	R/W	H'E801 00A2	16
Device address 0 configuration register	DEVADD0	R/W	H'E801 00D0	16
Device address 1 configuration register	DEVADD1	R/W	H'E801 00D2	16
Device address 2 configuration register	DEVADD2	R/W	H'E801 00D4	16
Device address 3 configuration register	DEVADD3	R/W	H'E801 00D6	16
Device address 4 configuration register	DEVADD4	R/W	H'E801 00D8	16
Device address 5 configuration register	DEVADD5	R/W	H'E801 00DA	16
Device address 6 configuration register	DEVADD6	R/W	H'E801 00DC	16
Device address 7 configuration register	DEVADD7	R/W	H'E801 00DE	16
Device address 8 configuration register	DEVADD8	R/W	H'E801 00E0	16
Device address 9 configuration register	DEVADD9	R/W	H'E801 00E2	16
Device address A configuration register	DEVADDA	R/W	H'E801 00E4	16

chanhvinh.com

29.3.1 System Configuration Control Register (SYSCFG)

SYSCFG is a register that enables high-speed operation, selects the host controller function or function controller function, controls the DP and DM pins, selects an input clock, and enables operation of this module.

This register is initialized by a power-on reset.

Bit:	15	14	13	12	11	10	9	8	7	6	5	4	3	2	1	0
	—	—	—	—	—	SCKE	—	—	HSE	DCFM	DRPD	DPRPU	UCKF SEL	UCKP SEL	UPLLE	USBE
Initial value:	0	0	0	0	0	0	0	0	0	0	0	0	0	0	0	0
R/W:	R	R	R	R	R	R/W	R	R	R/W	R/W	R/W	R/W	R/W	R/W	R/W	R/W

Bit	Bit Name	Initial Value	R/W	Description
15 to 11	—	All 0	R	Reserved These bits are always read as 0. The write value should always be 0.
10	SCKE	0	R/W	USB Module Clock Enable Stops or enables supplying the clock signal to this module. 0: Stops supplying the clock signal to the USB module. 1: Enables supplying the clock signal to the USB module. When this bit is 0, only this register and the BUSWAIT register allow both writing and reading; the other registers in the USB module allows reading only. When modifying this bit while 12-MHz clock input is selected by UCKFSEL, take care on following points. • Before setting this bit to 1, wait for at least 1 ms after setting UPLLE to 1. • When transition to software standby or USB module standby mode is made, set this bit to 0.
9, 8	—	All 0	R	Reserved These bits are always read as 0. The write value should always be 0.

chanhvinh.com

Bit	Bit Name	Initial Value	R/W	Description
7	HSE	0	R/W	High-Speed Operation Enable 0: High-speed operation is disabled When the function controller function is selected: Only full-speed operation is enabled. When the host controller function is selected: Full-speed or low-speed operation is enabled. 1: High-speed operation is enabled (detected by this module) (1) When the host controller function is selected When HSE = 0, the USB port performs low-speed or full-speed operation. Set HSE to 0 when connection of a low-speed peripheral device to the USB port has been detected. When HSE = 1, this module executes the reset handshake protocol, and automatically allows the USB port to perform high-speed or full-speed operation according to the protocol execution result. This bit should be modified after detecting device connection (after detecting the ATTCH interrupt) and before executing a USB bus reset (before setting USBRESET to 1). (2) When the function controller function is selected When HSE = 0, this module performs full-speed operation. When HSE = 1, this module executes the reset handshake protocol, and automatically performs high-speed or full-speed operation according to the protocol execution result. This bit should be modified while DPRPU is 0.
6	DCFM	0	R/W	Controller Function Select Selects the host controller function or function controller function. 0: Function controller function is selected. 1: Host controller function is selected. This bit should be modified while DPRPU and DPRD are 0.

chanhvinh.com

Bit	Bit Name	Initial Value	R/W	Description
5	DRPD	0	R/W	D+/D− Line Resistor Control Enables or disables pulling down D+ and D- lines when the host controller function is selected. 0: Pulling down the lines is disabled. 1: Pulling down the lines is enabled. This bit should be set to 1 if the host controller function is selected, and should be set to 0 if the function controller function is selected.
4	DPRPU	0	R/W	D+ Line Resistor Control Enables or disables pulling up D+ line when the function controller function is selected. 0: Pulling up the line is disabled. 1: Pulling up the line is enabled. Setting this bit to 1 when the function controller function is selected allows this module to pull up the D+ line to 3.3 V, thus notifying the USB host of connection. Modifying this bit from 1 to 0 allows this module to cancel pulling up the D+ line, thus notifying the USB host of disconnection. This bit should be set to 1 if the function controller function is selected, and should be set to 0 if the host controller function is selected. Note: Set this bit to 0 when the USB is disconnected. Include the following processing when this bit is changed from 1 to 0. (1) Set the DPRPU bit to 0. (2) Wait for at least 1 μs. (3) Set the DCFM bit to 1. (4) Wait for at least 200 ns. (5) Set the DCFM bit to 0.
3	UCKFSEL	0	R/W	Input Clock Frequency Select Selects the frequency of the clock input to this module. 0: 48-MHz clock input is selected. 1: 12-MHz clock input is selected. This bit should be modified while SCKE is 0. Note: This bit should be 1 when EXTAL is selected by UCKPSEL.

chanhvinh.com

Bit	Bit Name	Initial Value	R/W	Description
2	UCKPSEL	0	R/W	Clock Input Pin Select Selects the clock input pin to this module. 0: USB_X1 is selected. 1: EXTAL is selected. This bit should be modified while SCKE is 0.
1	UPLLE	0	R/W	USB Internal PLL Operation Enable Enables or disables operation of USB internal PLL when 12-MHz clock input is selected by UCKFSEL. 0: USB internal PLL operation is disabled. 1: USB internal PLL operation is enabled. When 48-MHz clock input is selected by UCKFSEL, setting this bit is invalid. This bit should be modified while SCKE is 0. When 12-MHz clock input is selected by UCKFSEL and a transition to software standby mode or USB module standby mode is made, set this bit to 0.
0	USBE	0	R/W	USB Module Operation Enable Enables or disables operation of this module. 0: USB module operation is disabled. 1: USB module operation is enabled. Modifying this bit from 1 to 0 initializes some register bits as listed in tables 29.3 and 29.4. This bit should be modified while SCKE is 1. When the host controller function is selected, this bit should be set to 1 after setting DRPD to 1, eliminating LNST bit chattering, and checking that the USB bus has been settled.

chanhvinh.com

Table 29.3 Register Bits Initialized by Writing USBE = 0 (when Function Controller Function is Selected)

Register Name	Bit Name	Remarks
SYSSTS	LNST	The value is retained when the host controller function is selected.
DVSTCTR	RHST	
INTSTS0	DVSQ	The value is retained when the host controller function is selected.
USBADDR	USBADDR	The value is retained when the host controller function is selected.
USEREQ	BRequest, bmRequestType	The values are retained when the host controller function is selected.
USBVAL	wValue	The value is retained when the host controller function is selected.
USBINDX	wIndex	The value is retained when the host controller function is selected.
USBLENG	wLength	The value is retained when the host controller function is selected.

Table 29.4 Register Bits Initialized by Writing USBE = 0 (when Host Controller Function is Selected)

Register Name	Bit Name	Remarks
DVSTCTR	RHST	
FRMNUM	FRNM	The value is retained when the function controller function is selected.
UFRMNUM	UFRNM	The value is retained when the function controller function is selected.

chanhvinh.com

29.3.2 CPU Bus Wait Setting Register (BUSWAIT)

BUSWAIT is a register that specifies the number of wait cycles to be inserted during an access from the CPU to this module.

This register can be modified even when the SCKE bit in SYSCFG is 0.

This register is initialized by a power-on reset.

Bit:	15	14	13	12	11	10	9	8	7	6	5	4	3	2	1	0
	—	—	—	—	—	—	—	—	—	—	—	—	BWAIT[3:0]			
Initial value:	0	0	0	0	0	0	0	0	0	0	0	0	1	1	1	1
R/W:	R	R	R	R	R	R	R	R	R	R	R	R	R/W	R/W	R/W	R/W

Bit	Bit Name	Initial Value	R/W	Description
15 to 4	—	All 0	R	Reserved These bits are always read as 0. The write value should always be 0.
3 to 0	BWAIT[3:0]	1111	R/W	CPU Bus Access Wait Specifies the number of wait cycles to be inserted during an access to a register (the same number applies to an access to a FIFO port). For details, see section 29.4.1 (5), Register Access Wait Control. 0000: 0 wait cycles (2 access cycles) : 0010: 2 wait cycles (4 access cycles) : 0100: 4 wait cycles (6 access cycles) : 1111: 15 wait cycles (17 access cycles)

chanhvinh.com

29.3.3 System Configuration Status Register (SYSSTS)

SYSSTS is a register that monitors the line status (D + and D – lines) of the USB data bus.

This register is initialized by a power-on reset or a USB bus reset.

Bit:	15	14	13	12	11	10	9	8	7	6	5	4	3	2	1	0
	—	—	—	—	—	—	—	—	—	—	—	—	—	—	LNST[1:0]	
Initial value:	0	0	0	0	0	Undefined	0	0	0	0	0	0	0	0	Undefined*	Undefined*
R/W:	R	R	R	R	R	R	R	R	R	R	R	R	R	R	R	R

Bit	Bit Name	Initial Value	R/W	Description
15 to 11	—	All 0	R	Reserved These bits are always read as 0. The write value should always be 0.
10	—	Undefined	R	Reserved The read value is undefined. The write value should always be 0.
9 to 2	—	All 0	R	Reserved These bits are always read as 0. The write value should always be 0.
1, 0	LNST[1:0]	Undefined*	R	USB Data Line Status Monitor Indicates the status of the USB data bus lines (D+ and D-) as shown in table 29.5. These bits should be read after setting DPRPU to 1 to notify connection when the function controller function is selected; whereas after setting DRPD to 1 to enable pulling down the lines when the host controller function is selected.

Note: * Depends on the DP and DM pin status.

chanhvinh.com

Table 29.5 USB Data Bus Line Status

LNST[1]	LNST[0]	During Low-Speed Operation (only when Host Controller Function is Selected)	During Full-Speed Operation	During High-Speed Operation	During Chirp Operation
0	0	SE0	SE0	Squelch	Squelch
0	1	K state	J state	Unsquelch	Chirp J
1	0	J state	K state	Invalid	Chirp K
1	1	SE1	SE1	Invalid	Invalid

[Legend]

Chirp:	The reset handshake protocol (RHSP) is being executed in high-speed operation enabled state (the HSE bit in SYSCFG is set to 1).
Squelch:	SE0 or idle state
Unsquelch:	High-speed J state or high-speed K state
Chirp J:	Chirp J state
Chirp K:	Chirp K state

29.3.4 Device State Control Register (DVSTCTR)

DVSTCTR is a register that controls and confirms the state of the USB data bus.

This register is initialized by a power-on reset. After a USB bus reset, only the WKUP bit is initialized.

Bit:	15	14	13	12	11	10	9	8	7	6	5	4	3	2	1	0
	—	—	—	—	—	—	—	WKUP	RWUPE	USBRST	RESUME	UACT	—	RHST[2:0]		
Initial value:	0	0	0	0	0	0	0	0	0	0	0	0	0	0	0	0
R/W:	R	R	R	R	R	R	R	R/W*	R/W	R/W	R/W	R/W	R	R	R	R

Bit	Bit Name	Initial Value	R/W	Description
15 to 9	—	All 0	R	Reserved These bits are always read as 0. The write value should always be 0.

chanhvinh.com

Bit	Bit Name	Initial Value	R/W	Description
8	WKUP	0	R/W*	Wakeup Output Enables or disables outputting the remote wakeup signal (resume signal) to the USB bus when the function controller function is selected. 0: Remote wakeup signal is not output. 1: Remote wakeup signal is output. The module controls the output time of a remote wakeup signal. When this bit is set to 1, this module clears this bit to 0 after outputting the 10-ms K state. According to the USB specification, the USB bus idle state must be kept for 5 ms or longer before a remote wakeup signal is output. If this module writes 1 to this bit right after detection of suspended state, the K state will be output after 2 ms. Note: Do not write 1 to this bit, unless the device state is in the suspended state (the DVSQ bit in the INTSTS0 register is set to 1xx) and the USB host enables the remote wakeup signal. When this bit is set to 1, the internal clock must not be stopped even in the suspended state (write 1 to this bit while SCKE is 1). This bit should be set to 0 if the host controller function is selected.

chanhvinh.com

Bit	Bit Name	Initial Value	R/W	Description
7	RWUPE	0	R/W	Remote Wakeup Detection Enable Enables or disables the downstream port peripheral device to use the remote wakeup function (resume signal output) when the host controller function is selected. 0: Downstream port remote wakeup is disabled. 1: Downstream port remote wakeup is enabled. With this bit set to 1, on detecting the remote wakeup signal, this module detects the resume signal (K-state for 2.5 μs) from the downstream port device and performs the resume process (drives the port to the K-state). With this bit set to 0, this module ignores the detected remote wakeup signal (K-state) from the peripheral device connected to the downstream port. While this bit is 1, the internal clock should not be stopped even in the suspended state (SCKE should be set to 1). Also note that the USB bus should not be reset from the suspended state (USBRST should not be set to 1); it is prohibited by USB Specification 2.0. This bit should be set to 0 if the function controller function is selected.

chanhvinh.com

Bit	Bit Name	Initial Value	R/W	Description
6	USBRST	0	R/W	Bus Reset Output Controls the USB bus reset signal output when the host controller function is selected. 0: USB bus reset signal is not output. 1: USB bus reset signal is output. When the host controller function is selected, setting this bit to 1 allows this module to drive the USB port to SE0 to reset the USB bus. Here, this module performs the reset handshake protocol if the HSE bit is 1. This module continues outputting SE0 while USBRST is 1 (until 0 is written to USBRST). USBRST should be 1 (= USB bus reset period) for the time defined by USB Specification 2.0. Writing 1 to this bit during communication (UACT = 1) or during the resume process (RESUME = 1) prevents this module from starting the USB bus reset process until both UACT and RESUME become 0. Write 1 to the UACT bit simultaneously with the end of the USB bus reset process (writing 0 to USBRST). This bit should be set to 0 if the function controller function is selected.
5	RESUME	0	R/W	Resume Output Controls the resume signal output when the host controller function is selected. 0: Resume signal is not output. 1: Resume signal is output. Setting this bit to 1 allows this module to drive the port to the K-state and output the resume signal. This module continues outputting K-state while RESUME is 1 (until 0 is written to RESUME). RESUME should be 1 (= resume period) for the time defined by USB Specification 2.0. This bit should be set to 1 in the suspended state. Write 1 to the UACT bit simultaneously with the end of the resume process (writing 0 to RESUME). This bit should be set to 0 if the function controller function is selected.

chanhvinh.com

Bit	Bit Name	Initial Value	R/W	Description
4	UACT	0	R/W	USB Bus Enable Enables operation of the USB bus (controls the SOF or μSOF packet transmission to the USB bus) when the host controller function is selected. 0: Downstream port is disabled (SOF/μSOF transmission is disabled). 1: Downstream port is enabled (SOF/μSOF transmission is enabled). With this bit set to 1, this module puts the USB port to the USB-bus enabled state and performs SOF output and data transmission and reception. This module starts outputting SOF/μSOF within 1 (μ) frame after 1 has been written to UACT. With this bit set to 0, this module enters the idle state after outputting SOF/μSOF. This module sets this bit to 0 on any of the following conditions. • A DTCH interrupt is detected during communication (while UACT = 1). • An EOFERR interrupt is detected during communication (while UACT = 1). Writing 1 to this bit should be done at the end of the USB bus reset process (writing 0 to USBRST) or at the end of the resume process from the suspended state (writing 0 to RESUME). This bit should be set to 0 if the function controller function is selected.
3	—	0	R	Reserved This bit is always read as 0. The write value should always be 0.

chanhvinh.com

Bit	Bit Name	Initial Value	R/W	Description
2 to 0	RHST[2:0]	000	R	Reset Handshake Indicates the status of the reset handshake. (1) When the host controller function is selected 000: Communication speed not determined (powered state or no connection) 1xx: Reset handshake in progress 001: Low-speed connection 010: Full-speed connection 011: High-speed connection These bits indicate 100 after 1 has been written to USBRST. If HSE has been set to 1, these bits indicate 111 as soon as this module detects Chirp-K from the peripheral device. This module fixes the value of the RHST bits when 0 is written to USBRST and this module completes SE0 driving. When the UTST bits are set to 1xxx (when a host test mode is specified), the RHST bits indicate 011. (2) When the function controller function is selected 000: Communication speed not determined 100: Reset handshake in progress 010: Full-speed connection 011: High-speed connection If HSE has been set to 1, these bits indicate 100 as soon as this module detects the USB bus reset. Then, these bits indicate 011 as soon as this module outputs Chirp-K and detects Chirp-JK from the USB host three times. If the connection speed is not fixed to high speed within 2.5 ms after Chirp-K output, these bits indicate 010. If HSE has been set to 0, these bits indicate 010 as soon as this module detects the USB bus reset. A DVST interrupt is generated as soon as this module detects the USB bus reset and then the value of the RHST bits is fixed to 010 or 011.

Note: * Only 1 can be written.

chanhvinh.com

29.3.5 Test Mode Register (TESTMODE)

TESTMODE is a register that controls the USB test signal output during high-speed operation.

This register is initialized by a power-on reset.

Bit:	15	14	13	12	11	10	9	8	7	6	5	4	3	2	1	0
	—	—	—	—	—	—	—	—	—	—	—	—	UTST[3:0]			
Initial value:	0	0	0	0	0	0	0	1	0	0	0	0	0	0	0	0
R/W:	R	R	R	R	R	R	R	R	R	R	R	R	R/W	R/W	R/W	R/W

Bit	Bit Name	Initial Value	R/W	Description
15 to 9	—	All 0	R	Reserved These bits are always read as 0. The write value should always be 0.
8	—	1	R	Reserved This bit is always read as 1. The write value should always be 1.
7 to 4	—	All 0	R	Reserved These bits are always read as 0. The write value should always be 0.
3 to 0	UTST[3:0]	0000	R/W	Test Mode This module outputs the USB test signals during the high-speed operation, when these bits are written appropriate value. Table 29.6 shows test mode operation of this module.

chanhvinh.com

Bit	Bit Name	Initial Value	R/W	Description
3 to 0	UTST[3:0]	0000	R/W	(1) When the host controller function is selected These bits can be set after writing 1 to DRPD. This module outputs waveforms when both DRPD and UACT are set to 1. This module also performs high-speed termination after the UTST bits are written to. • Procedure for setting the UTST bits 1. Power-on reset. 2. Start the clock supply (Set SCKE to 1 after the crystal oscillation and the PLL for USB are settled). 3. Set DCFM and DRPD to 1 (setting HSE to 1 is not required). 4. Set USBE to 1. 5. Set the UTST bits to the appropriate value according to the test specifications. 6. Set the UACT bit to 1. • Procedure for modifying the UTST bits 1. (In the state after executing step 6 above) Set UACT and USBE to 0. 2. Set USBE to 1. 3. Set the UTST bits to the appropriate value according to the test specifications. 4. Set the UACT bit to 1. When these bits are set to Test_SE0_NAK (1011), this module does not output the SOF packet even when 1 is set to UACT. When these bits are set to Test_Force_Enable (1101), this module outputs the SOF packet when 1 is set to UACT. In this test mode, this module does not perform hardware control consequent to detection of high-speed disconnection (detection of the DTCH interrupt). When setting the UTST bits, the PID bits for all the pipes should be set to NAK. To return to normal USB communication after a test mode has been set and executed, a power-on reset should be applied.

chanhvinh.com

Bit	Bit Name	Initial Value	R/W	Description
3 to 0	UTST[3:0]	0000	R/W	(2) When the function controller function is selected The appropriate value should be set to these bits according to the SetFeature request from the USB host during high-speed communication. This module does not make a transition to the suspended state while these bits are 0001 to 0100.

Table 29.6 Test Mode Operation

	UTST Bit Setting	
Test Mode	**When Function Controller Function is Selected**	**When Host Controller Function is Selected**
Normal operation	0000	0000
Test_J	0001	1001
Test_K	0010	1010
Test_SE0_NAK	0011	1011
Test_Packet	0100	1100
Test_Force_Enable	—	1101
Reserved	0101 to 0111	1110 to 1111

chanhvinh.com

29.3.6 DMA-FIFO Bus Configuration Registers (D0FBCFG, D1FBCFG)

D0FBCFG is a register that controls DMA0-FIFO bus accesses. D1FBCFG is a register that controls DMA1-FIFO bus accesses.

These registers are initialized by a power-on reset.

Bit:	15	14	13	12	11	10	9	8	7	6	5	4	3	2	1	0
	—	—	—	—	—	—	—	—	—	—	—	TENDE	—	—	—	—
Initial value:	0	0	0	0	Undefined	Undefined	Undefined	Undefined	Undefined	Undefined	Undefined	0	Undefined	Undefined	Undefined	Undefined
R/W:	R	R	R	R	R	R	R	R	R	R	R	R/W	R	R	R	R

Bit	Bit Name	Initial Value	R/W	Description
15 to 12	—	All 0	R	Reserved These bits are always read as 0. The write value should always be 0.
11 to 5	—	Undefined	R	Reserved The read value is undefined. The write value should always be 0.
4	TENDE	0	R/W	DMA Transfer End Sampling Enable Controls acceptance of DMA transfer end signal output from the direct memory access controller on completion of a DMA transfer. For details, see section 29.4.4 (3), DMA Transfers (D0FIFO/D1FIFO Port). 0: DMA transfer end signal is not sampled. 1: DMA transfer end signal is sampled. For a DMA transfer size of 16 bytes, clear the TENDE bit to 0.
3 to 0	—	Undefined	R	Reserved The read value is undefined. The write value should always be 0.

chanhvinh.com

29.3.7 FIFO Port Registers (CFIFO, D0FIFO, D1FIFO)

CFIFO, D0FIFO and D1FIFO are port registers that are used to read data from the FIFO buffer memory and writing data to the FIFO buffer memory.

There are three FIFO ports: the CFIFO, D0FIFO and D1FIFO ports. Each FIFO port is configured of a port register (CFIFO, D0FIFO, D1FIFO) that handles reading of data from the FIFO buffer memory and writing of data to the FIFO buffer memory, a select register (CFIFOSEL, D0FIFOSEL, D1FIFOSEL) that is used to select the pipe assigned to the FIFO port, and a control register (CFIFOCTR, D0FIFOCTR, D1FIFOCTR).

Each FIFO port has the following features.

- The DCP FIFO buffer should be accessed through the CFIFO port.
- Accessing the FIFO buffer using DMA transfer should be performed through the D0FIFO or D1FIFO port.
- The D1FIFO and D0FIFO ports can be accessed also by the CPU.
- When using functions specific to the FIFO port, the pipe number (selected pipe) specified by the CURPIPE bits cannot be changed (when the DMA transfer function is used, etc.).
- Registers configuring a FIFO port do not affect other FIFO ports.
- The same pipe should not be assigned to two or more FIFO ports.
- There are two FIFO buffer states: the access right is on the CPU side and it is on the SIE side. When the FIFO buffer access right is on the SIE side, the FIFO buffer cannot be accessed from the CPU.

These registers are initialized by a power-on reset.

Bit:	31	30	29	28	27	26	25	24	23	22	21	20	19	18	17	16
	FIFOPORT[31:16]															
Initial value:	0	0	0	0	0	0	0	0	0	0	0	0	0	0	0	0
R/W:	R/W	R/W	R/W	R/W	R/W	R/W	R/W	R/W	R/W	R/W	R/W	R/W	R/W	R/W	R/W	R/W
Bit:	15	14	13	12	11	10	9	8	7	6	5	4	3	2	1	0
	FIFOPORT[15:0]															
Initial value:	0	0	0	0	0	0	0	0	0	0	0	0	0	0	0	0
R/W:	R/W	R/W	R/W	R/W	R/W	R/W	R/W	R/W	R/W	R/W	R/W	R/W	R/W	R/W	R/W	R/W

chanhvinh.com

Bit	Bit Name	Initial Value	R/W	Description
31 to 0	FIFOPORT [31:0]	All 0	R/W	FIFO Port Accessing these bits allow reading the received data from the FIFO buffer or writing the transmit data to the FIFO buffer. These bits can be accessed only while the FRDY bit in each control register (CFIFOCTR, D0FIFOCTR, or D1FIFOCTR) is 1. The valid bits in this register depend on the settings of the MBW bits (access bit width setting) and BIGEND bit (endian setting) as shown in tables 29.7 to 29.9.

Table 29.7 Endian Operation in 32-Bit Access (when MBW = 10)

BIGEND Bit	Bits 31 to 24	Bits 23 to 16	Bits 15 to 8	Bits 7 to 0
0	N + 3 address	N + 2 address	N + 1 address	N + 0 address
1	N + 0 address	N + 1 address	N + 2 address	N + 3 address

Table 29.8 Endian Operation in 16-Bit Access (when MBW = 01)

BIGEND Bit	Bits 31 to 24	Bits 23 to 16	Bits 15 to 8	Bits 7 to 0
0	Writing: invalid, reading: prohibited*		N + 1 address	N + 0 address
1	N + 0 address	N + 1 address	Writing: invalid, reading: prohibited*	

Note: * Reading data from the invalid bits in a word or byte unit is prohibited.

Table 29.9 Endian Operation in 8-Bit Access (when MBW = 00)

BIGEND Bit	Bits 31 to 24	Bits 23 to 16	Bits 15 to 8	Bits 7 to 0
0	Writing: invalid, reading: prohibited*			N + 0 address
1	N + 0 address	Writing: invalid, reading: prohibited*		

Note: * Reading data from the invalid bits in a word or byte unit is prohibited.

chanhvinh.com

29.3.8 FIFO Port Select Registers (CFIFOSEL, D0FIFOSEL, D1FIFOSEL)

CFIFOSEL, D0FIFOSEL and D1FIFOSEL are registers that assign the pipe to the FIFO port, and control access to the corresponding port.

The same pipe should not be specified by the CURPIPE bits in CFIFOSEL, D0FIFOSEL and D1FIFOSEL. When the CURPIPE bits in D0FIFOSEL and D1FIFOSEL are cleared to B'000, no pipe is selected.

The pipe number should not be changed while the DMA transfer is enabled.

These registers are initialized by a power-on reset.

(1) CFIFOSEL

Bit:	15	14	13	12	11	10	9	8	7	6	5	4	3	2	1	0
	RCNT	REW	—	—	MBW[1:0]		—	BIGEND	—	—	ISEL	—	CURPIPE[3:0]			
Initial value:	0	0	0	0	0	0	0	0	0	0	0	0	0	0	0	0
R/W:	R/W	R/W*	R	R	R/W	R/W	R	R/W	R	R	R/W	R	R/W	R/W	R/W	R/W

Bit	Bit Name	Initial Value	R/W	Description
15	RCNT	0	R/W	Read Count Mode Specifies the read mode for the value in the DTLN bits in CFIFOCTR. 0: The DTLN bit is cleared when all of the receive data has been read from the CFIFO. (In double buffer mode, the DTLN bit value is cleared when all the data has been read from a single plane.) 1: The DTLN bit is decremented when the receive data is read from the CFIFO.

chanhvinh.com

Bit	Bit Name	Initial Value	R/W	Description
14	REW	0	R/W*	Buffer Pointer Rewind Specifies whether or not to rewind the buffer pointer. 0: The buffer pointer is not rewound. 1: The buffer pointer is rewound. When the selected pipe is in the receiving direction, setting this bit to 1 while the FIFO buffer is being read allows re-reading the FIFO buffer from the first data (in double buffer mode, re-reading the currently-read FIFO buffer plane from the first data is allowed). Do not set REW to 1 simultaneously with modifying the CURPIPE bits. Before setting REW to 1, be sure to check that FRDY is 1. To re-write to the FIFO buffer again from the first data for the pipe in the transmitting direction, use the BCLR bit.
13, 12	—	All 0	R	Reserved These bits are always read as 0. The write value should always be 0.

chanhvinh.com

Bit	Bit Name	Initial Value	R/W	Description
11, 10	MBW[1:0]	00	R/W	CFIFO Port Access Bit Width Specifies the bit width for accessing the CFIFO port. 00: 8-bit width 01: 16-bit width 10: 32-bit width 11: Setting prohibited Once reading data is started after setting these bits, these bits should not be modified until all the data has been read. When the selected pipe is in the receiving direction, these bits should be set in the following timing: • Set the CURPIPE and MBW bits simultaneously. • When the DCP is selected (CURPIPE = B'000), set the ISEL and MBW bits simultaneously. For details, see section 29.4.4, FIFO Buffer Memory. When the selected pipe is in the transmitting direction, the bit width cannot be changed from the 8-bit width to the 16-/32-bit width or from the 16-bit width to the 32-bit width while data is being written to the buffer memory.
9	—	0	R	Reserved This bit is always read as 0. The write value should always be 0.
8	BIGEND	0	R/W	CFIFO Port Endian Control Specifies the byte endian for the CFIFO port. 0: Little endian 1: Big endian
7, 6	—	All 0	R	Reserved These bits are always read as 0. The write value should always be 0.

chanhvinh.com

Bit	Bit Name	Initial Value	R/W	Description
5	ISEL	0	R/W	CFIFO Port Access Direction When DCP is Selected 0: Reading from the buffer memory is selected 1: Writing to the buffer memory is selected After writing to this bit with the DCP being a selected pipe, read this bit to check that the written value agrees with the read value before proceeding to the next process. Even if an attempt is made to modify the setting of this bit during access to the FIFO buffer, the current access setting is retained until the access is completed. Then, the modification becomes effective thus enabling continuous access. Set this bit and the CURPIPE bits simultaneously.
4	—	0	R	Reserved This bit is always read as 0. The write value should always be 0.

chanhvinh.com

Bit	Bit Name	Initial Value	R/W	Description
3 to 0	CURPIPE[3:0]	0000	R/W	CFIFO Port Access Pipe Specification Specifies the pipe number for reading or writing data through the CFIFO port. 0000: DCP 0001: Pipe 1 0010: Pipe 2 0011: Pipe 3 0100: Pipe 4 0101: Pipe 5 0110: Pipe 6 0111: Pipe 7 1000: Pipe 8 1001: Pipe 9 Other than above: Setting prohibited After writing to these bits, read these bits to check that the written value agrees with the read value before proceeding to the next process. Do not set the same pipe number to the CURPIPE bits in CFIFOSEL, D0FIFOSEL, and D1FIFOSEL. Even if an attempt is made to modify the setting of these bits during access to the FIFO buffer, the current access setting is retained until the access is completed. Then, the modification becomes effective thus enabling continuous access.

Note: * Only 0 can be read and 1 can be written.

chanhvinh.com

(2) D0FIFOSEL, D1FIFOSEL

Bit:	15	14	13	12	11	10	9	8	7	6	5	4	3	2	1	0
	RCNT	REW	DCLRM	DREQE	MBW[1:0]		—	BIG END	—	—	—	—	CURPIPE[3:0]			
Initial value:	0	0	0	0	0	0	0	0	0	0	0	0	0	0	0	0
R/W:	R/W	R/W*	R/W	R/W	R/W	R/W	R	R/W	R	R	R	R	R/W	R/W	R/W	R/W

Bit	Bit Name	Initial Value	R/W	Description
15	RCNT	0	R/W	Read Count Mode Specifies the read mode for the value in the DTLN bits in DnFIFOCTR. 0: The DTLN bit is cleared when all of the receive data has been read from the DnFIFO. (In double buffer mode, the DTLN bit value is cleared when all the data has been read from a single plane.) 1: The DTLN bit is decremented when the receive data is read from the DnFIFO. When accessing DnFIFO with the BFRE bit set to 1, set this bit to 0.
14	REW	0	R/W*	Buffer Pointer Rewind Specifies whether or not to rewind the buffer pointer. 0: The buffer pointer is not rewound. 1: The buffer pointer is rewound. When the selected pipe is in the receiving direction, setting this bit to 1 while the FIFO buffer is being read allows re-reading the FIFO buffer from the first data (in double buffer mode, re-reading the currently-read FIFO buffer plane from the first data is allowed). Do not set REW to 1 simultaneously with modifying the CURPIPE bits. Before setting REW to 1, be sure to check that FRDY is 1. To re-write to the FIFO buffer again from the first data for the pipe in the transmitting direction, use the BCLR bit.

chanhvinh.com

Bit	Bit Name	Initial Value	R/W	Description
13	DCLRM	0	R/W	Auto Buffer Memory Clear Mode Accessed after Specified Pipe Data is Read Enables or disables the buffer memory to be cleared automatically after data has been read out using the selected pipe. 0: Auto buffer clear mode is disabled. 1: Auto buffer clear mode is enabled. With this bit set to 1, this module sets BCLR to 1 for the FIFO buffer of the selected pipe on receiving a zero-length packet while the FIFO buffer assigned to the selected pipe is empty, or on receiving a short packet and reading the data while BFRE is 1. When using this module with the BRDYM bit set to 1, set this bit to 0.
12	DREQE	0	R/W	DMA Transfer Request Enable Enables or disables the DMA transfer request to be issued. 0: Request disabled 1: Request enabled Before setting this bit to 1 to enable the DMA transfer request to be issued, set the CURPIPE bits. Before modifying the CURPIPE bit setting, set this bit to 0.

chanhvinh.com

Bit	Bit Name	Initial Value	R/W	Description
11, 10	MBW[1:0]	00	R/W	FIFO Port Access Bit Width Specifies the bit width for accessing the DnFIFO port. 00: 8-bit width 01: 16-bit width 10: 32-bit width 11: Setting prohibited Once reading data is started after setting these bits, these bits should not be modified until all the data has been read. When the selected pipe is in the receiving direction, set the CURPIPE and MBW bits simultaneously. For details, see section 29.4.4, FIFO Buffer Memory. When the selected pipe is in the transmitting direction, the bit width cannot be changed from the 8-bit width to the 16-/32-bit width or from the 16-bit width to the 32-bit width while data is being written to the buffer memory.
9	—	0	R	Reserved This bit is always read as 0. The write value should always be 0.
8	BIGEND	0	R/W	FIFO Port Endian Control Specifies the byte endian for the DnFIFO port. 0: Little endian 1: Big endian
7 to 4	—	All 0	R	Reserved These bits are always read as 0. The write value should always be 0.

chanhvinh.com

Bit	Bit Name	Initial Value	R/W	Description
3 to 0	CURPIPE[3:0]	0000	R/W	FIFO Port Access Pipe Specification Specifies the pipe number for reading or writing data through the D0FIFO/D1FIFO port. 0000: No pipe specified 0001: Pipe 1 0010: Pipe 2 0011: Pipe 3 0100: Pipe 4 0101: Pipe 5 0110: Pipe 6 0111: Pipe 7 1000: Pipe 8 1001: Pipe 9 Other than above: Setting prohibited After writing to these bits, read these bits to check that the written value agrees with the read value before proceeding to the next process. Do not set the same pipe number to the CURPIPE bits in CFIFOSEL, D0FIFOSEL, and D1FIFOSEL. Even if an attempt is made to modify the setting of these bits during access to the FIFO buffer, the current access setting is retained until the access is completed. Then, the modification becomes effective thus enabling continuous access.

Note: * Only 0 can be read and 1 can be written.

29.3.9 FIFO Port Control Registers (CFIFOCTR, D0FIFOCTR, D1FIFOCTR)

CFIFOCTR, D0FIFOCTR and D1FIFOCTR are registers that determine whether or not writing to the buffer memory has been finished, the buffer accessed from the CPU has been cleared, and the FIFO port is accessible. CFIFOCTR, D0FIFOCTR, and D1FIFOCTR are used for the corresponding FIFO ports.

These registers are initialized by a power-on reset.

chanhvinh.com

Bit:	15	14	13	12	11	10	9	8	7	6	5	4	3	2	1	0
	BVAL	BCLR	FRDY	—	DTLN[11:0]											
Initial value:	0	0	0	0	0	0	0	0	0	0	0	0	0	0	0	0
R/W:	R/W*2	R/W*1	R	R	R	R	R	R	R	R	R	R	R	R	R	R

Bit	Bit Name	Initial Value	R/W	Description
15	BVAL	0	R/W*2	Buffer Memory Valid Flag This bit should be set to 1 when data has been completely written to the FIFO buffer on the CPU side for the pipe selected using the CURPIPE bits (selected pipe). 0: Invalid 1: Writing ended When the selected pipe is in the transmitting direction, set this bit to 1 in the following cases. Then, this module switches the FIFO buffer from the CPU side to the SIE side, enabling transmission. • To transmit a short packet, set this bit to 1 after data has been written. • To transmit a zero-length packet, set this bit to 1 before data is written to the FIFO buffer. • Set this bit to 1 after the number of data bytes has been written for the pipe in continuous transfer mode, where the number is a natural integer multiple of the maximum packet size and less than the buffer size. When the data of the maximum packet size has been written for the pipe in non-continuous transfer mode, this module sets this bit to 1 and switches the FIFO buffer from the CPU side to the SIE side, enabling transmission. When the selected pipe is in the transmitting direction, if 1 is written to BVAL and BCLR bits simultaneously, this module clears the data that has been written before it, enabling transmission of a zero-length packet. Writing 1 to this bit should be done while FRDY indicates 1 (set by this module). When the selected pipe is in the receiving direction, do not set this bit to 1.

chanhvinh.com

Bit	Bit Name	Initial Value	R/W	Description
14	BCLR	0	R/W*[1]	CPU Buffer Clear This bit should be set to 1 to clear the FIFO buffer on the CPU side for the selected pipe. 0: Invalid 1: Clears the buffer memory on the CPU side. When double buffer mode is set for the FIFO buffer assigned to the selected pipe, this module clears only one plane of the FIFO buffer even when both planes are read-enabled. When the selected pipe is the DCP, setting BCLR to 1 allows this module to clear the FIFO buffer regardless of whether the FIFO buffer is on the CPU side or SIE side. To clear the buffer on the SIE side, set the PID bits for the DCP to NAK before setting BCLR to 1. When the selected pipe is not the DCP, writing 1 to this bit should be done while FRDY indicates 1 (set by this module).
13	FRDY	0	R	FIFO Port Ready Indicates whether the FIFO port can be accessed. 0: FIFO port access is disabled. 1: FIFO port access is enabled. In the following cases, this module sets FRDY to 1 but data cannot be read via the FIFO port because there is no data to be read. In these cases, set BCLR to 1 to clear the FIFO buffer, and enable transmission and reception of the next data. • A zero-length packet is received when the FIFO buffer assigned to the selected pipe is empty. • A short packet is received and the data is completely read while BFRE is 1.

chanhvinh.com

Bit	Bit Name	Initial Value	R/W	Description
12	—	0	R	Reserved This bit is always read as 0. The write value should always be 0.
11 to 0	DTLN[11:0]	H'000	R	Receive Data Length Indicates the length of the receive data. While the FIFO buffer is being read, these bits indicate the different values depending on the RCNT bit value as described below. • RCNT = 0: This module sets these bits to indicate the length of the receive data until all the received data has been read from a single FIFO buffer plane. While BFRE is 1, these bits retain the length of the receive data until BCLR is set to 1 even after all the data has been read. • RCNT = 1: This module decrements the value indicated by these bits each time data is read from the FIFO buffer. (The value is decremented by one when MBW is 00, by two when MBW is 01, and by four when MBW is 10.) This module sets these bits to 0 when all the data has been read from one FIFO buffer plane. However, in double buffer mode, if data has been received in one FIFO buffer plane before all the data has been read from the other plane, this module sets these bits to indicate the length of the receive data in the former plane when all the data has been read from the latter plane. Note: When RCNT is 1, it takes 10 bus cycles for these bits to be updated after the FIFO port has been read.

Notes: 1. Only 0 can be read and 1 can be written.
2. Only 1 can be written.

chanhvinh.com

29.3.10 Interrupt Enable Register 0 (INTENB0)

INTENB0 is a register that enables or disables the various interrupts. On detecting the interrupt corresponding to the bit that has been set to 1, this module generates the USB interrupt.

This module sets 1 to each status bit in INTSTS0 when a detection condition of the corresponding interrupt source has been satisfied regardless of the set value in INTENB0 (regardless of whether the interrupt output is enabled or disabled).

While the status bit in INTSTS0 corresponding to the interrupt source indicates 1, this module generates the USB interrupt when the corresponding interrupt enable bit in INTENB0 is modified from 0 to 1.

This register is initialized by a power-on reset.

Bit:	15	14	13	12	11	10	9	8	7	6	5	4	3	2	1	0
	VBSE	RSME	SOFE	DVSE	CTRE	BEMPE	NRDYE	BRDYE	—	—	—	—	—	—	—	—
Initial value:	0	0	0	0	0	0	0	0	0	0	0	0	0	0	0	0
R/W:	R/W	R/W	R/W	R/W	R/W	R/W	R/W	R/W	R	R	R	R	R	R	R	R

Bit	Bit Name	Initial Value	R/W	Description
15	VBSE	0	R/W	VBUS Interrupt Enable Enables or disables the USB interrupt request when the VBINT interrupt is detected. 0: Interrupt request disabled 1: Interrupt request enabled
14	RSME	0	R/W	Resume Interrupt Enable* Enables or disables the USB interrupt request when the RESM interrupt is detected. 0: Interrupt request disabled 1: Interrupt request enabled
13	SOFE	0	R/W	Frame Number Update Interrupt Enable Enables or disables the USB interrupt request when the SOFR interrupt is detected. 0: Interrupt request disabled 1: Interrupt request enabled

chanhvinh.com

Bit	Bit Name	Initial Value	R/W	Description
12	DVSE	0	R/W	Device State Transition Interrupt Enable* Enables or disables the USB interrupt request when the DVST interrupt is detected. 0: Interrupt request disabled 1: Interrupt request enabled
11	CTRE	0	R/W	Control Transfer Stage Transition Interrupt Enable* Enables or disables the USB interrupt request when the CTRT interrupt is detected. 0: Interrupt request disabled 1: Interrupt request enabled
10	BEMPE	0	R/W	Buffer Empty Interrupt Enable Enables or disables the USB interrupt request when the BEMP interrupt is detected. 0: Interrupt request disabled 1: Interrupt request enabled
9	NRDYE	0	R/W	Buffer Not Ready Response Interrupt Enable Enables or disables the USB interrupt request when the NRDY interrupt is detected. 0: Interrupt request disabled 1: Interrupt request enabled
8	BRDYE	0	R/W	Buffer Ready Interrupt Enable Enables or disables the USB interrupt request when the BRDY interrupt is detected. 0: Interrupt request disabled 1: Interrupt request enabled
7 to 0	—	All 0	R	Reserved These bits are always read as 0. The write value should always be 0.

Note: * The RSME, DVSE, and CTRE bits can be set to 1 only when the function controller function is selected; do not set these bits to 1 to enable the corresponding interrupt output when the host controller function is selected.

chanhvinh.com

29.3.11 Interrupt Enable Register 1 (INTENB1)

INTENB1 is a register that enables or disables the various interrupts when the host controller function is selected. On detecting the interrupt corresponding to the bit in this register that has been set to 1, this module generates the USB interrupt.

This module sets 1 to each status bit in INTSTS1 when a detection condition of the corresponding interrupt source has been satisfied regardless of the set value in INTENB1 (regardless of whether the interrupt output is enabled or disabled).

While the status bit in INTSTS1 corresponding to the interrupt source indicates 1, this module generates the USB interrupt when the corresponding interrupt enable bit in INTENB1 is modified from 0 to 1.

When the function controller function is selected, the interrupts should not be enabled. This register is initialized by a power-on reset.

Bit:	15	14	13	12	11	10	9	8	7	6	5	4	3	2	1	0
	—	BCHGE	—	DTCHE	ATTCHE	—	—	—	—	EOFERRE	SIGNE	SACKE	—	—	—	—
Initial value:	0	0	0	0	0	0	0	0	0	0	0	0	0	0	0	0
R/W:	R	R/W	R	R/W	R/W	R	R	R	R	R/W	R/W	R/W	R	R	R	R

Bit	Bit Name	Initial Value	R/W	Description
15	—	0	R	Reserved This bit is always read as 0. The write value should always be 0.
14	BCHGE	0	R/W	USB Bus Change Interrupt Enable Enables or disables the USB interrupt request when the BCHG interrupt is detected. 0: Interrupt request disabled 1: Interrupt request enabled
13	—	0	R	Reserved This bit is always read as 0. The write value should always be 0.
12	DTCHE	0	R/W	Disconnection Detection Interrupt Enable Enables or disables the USB interrupt request when the DTCH interrupt is detected. 0: Interrupt request disabled 1: Interrupt request enabled

chanhvinh.com

Bit	Bit Name	Initial Value	R/W	Description
11	ATTCHE	0	R/W	Connection Detection Interrupt Enable Enables or disables the USB interrupt request when the ATTCH interrupt is detected. 0: Interrupt request disabled 1: Interrupt request enabled
10 to 7	—	All 0	R	Reserved These bits are always read as 0. The write value should always be 0.
6	EOFERRE	0	R/W	EOF Error Detection Interrupt Enable Enables or disables the USB interrupt request when the EOFERR interrupt is detected. 0: Interrupt request disabled 1: Interrupt request enabled
5	SIGNE	0	R/W	Setup Transaction Error Interrupt Enable Enables or disables the USB interrupt request when the SIGN interrupt is detected. 0: Interrupt request disabled 1: Interrupt request enabled
4	SACKE	0	R/W	Setup Transaction Normal Response Interrupt Enable Enables or disables the USB interrupt request when the SACK interrupt is detected. 0: Interrupt request disabled 1: Interrupt request enabled
3 to 0	—	All 0	R	Reserved These bits are always read as 0. The write value should always be 0.

Note: The INTENB1 register bits can be set to 1 only when the host controller function is selected; do not set these bits to 1 to enable the corresponding interrupt output when the function controller function is selected.

chanhvinh.com

29.3.12 BRDY Interrupt Enable Register (BRDYENB)

BRDYENB is a register that enables or disables the BRDY bit in INTSTS0 to be set to 1 when the BRDY interrupt is detected for each pipe.

On detecting the BRDY interrupt for the pipe corresponding to the bit in this register that has been set to 1, this module sets 1 to the corresponding PIPEBRDY bit in BRDYSTS and the BRDY bit in INTSTS0, and generates the BRDY interrupt.

While at least one PIPEBRDY bit in BRDYSTS indicates 1, this module generates the BRDY interrupt when the corresponding interrupt enable bit in BRDYENB is modified from 0 to 1.

This register is initialized by a power-on reset.

Bit:	15	14	13	12	11	10	9	8	7	6	5	4	3	2	1	0
	—	—	—	—	—	—	PIPE9 BRDYE	PIPE8 BRDYE	PIPE7 BRDYE	PIPE6 BRDYE	PIPE5 BRDYE	PIPE4 BRDYE	PIPE3 BRDYE	PIPE2 BRDYE	PIPE1 BRDYE	PIPE0 BRDYE
Initial value:	0	0	0	0	0	0	0	0	0	0	0	0	0	0	0	0
R/W:	R	R	R	R	R	R	R/W	R/W	R/W	R/W	R/W	R/W	R/W	R/W	R/W	R/W

Bit	Bit Name	Initial Value	R/W	Description
15 to 10	—	All 0	R	Reserved These bits are always read as 0. The write value should always be 0.
9	PIPE9BRDYE	0	R/W	BRDY interrupt Enable for PIPE9 0: Interrupt output disabled 1: Interrupt output enabled
8	PIPE8BRDYE	0	R/W	BRDY interrupt Enable for PIPE8 0: Interrupt output disabled 1: Interrupt output enabled
7	PIPE7BRDYE	0	R/W	BRDY interrupt Enable for PIPE7 0: Interrupt output disabled 1: Interrupt output enabled
6	PIPE6BRDYE	0	R/W	BRDY interrupt Enable for PIPE6 0: Interrupt output disabled 1: Interrupt output enabled

chanhvinh.com

Bit	Bit Name	Initial Value	R/W	Description
5	PIPE5BRDYE	0	R/W	BRDY interrupt Enable for PIPE5 0: Interrupt output disabled 1: Interrupt output enabled
4	PIPE4BRDYE	0	R/W	BRDY interrupt Enable for PIPE4 0: Interrupt output disabled 1: Interrupt output enabled
3	PIPE3BRDYE	0	R/W	BRDY interrupt Enable for PIPE3 0: Interrupt output disabled 1: Interrupt output enabled
2	PIPE2BRDYE	0	R/W	BRDY interrupt Enable for PIPE2 0: Interrupt output disabled 1: Interrupt output enabled
1	PIPE1BRDYE	0	R/W	BRDY interrupt Enable for PIPE1 0: Interrupt output disabled 1: Interrupt output enabled
0	PIPE0BRDYE	0	R/W	BRDY interrupt Enable for PIPE0 0: Interrupt output disabled 1: Interrupt output enabled

29.3.13 NRDY Interrupt Enable Register (NRDYENB)

NRDYENB is a register that enables or disables the NRDY bit in INTSTS0 to be set to 1 when the NRDY interrupt is detected for each pipe.

On detecting the NRDY interrupt for the pipe corresponding to the bit in this register that has been set to 1, this module sets 1 to the corresponding PIPENRDY bit in NRDYSTS and the NRDY bit in INTSTS0, and generates the NRDY interrupt.

While at least one PIPENRDY bit in NRDYSTS indicates 1, this module generates the NRDY interrupt when the corresponding interrupt enable bit in NRDYENB is modified from 0 to 1.

This register is initialized by a power-on reset.

chanhvinh.com

Bit:	15	14	13	12	11	10	9	8	7	6	5	4	3	2	1	0
	—	—	—	—	—	—	PIPE9 NRDYE	PIPE8 NRDYE	PIPE7 NRDYE	PIPE6 NRDYE	PIPE5 NRDYE	PIPE4 NRDYE	PIPE3 NRDYE	PIPE2 NRDYE	PIPE1 NRDYE	PIPE0 NRDYE
Initial value:	0	0	0	0	0	0	0	0	0	0	0	0	0	0	0	0
R/W:	R	R	R	R	R	R	R/W	R/W	R/W	R/W	R/W	R/W	R/W	R/W	R/W	R/W

Bit	Bit Name	Initial Value	R/W	Description
15 to 10	—	All 0	R	Reserved These bits are always read as 0. The write value should always be 0.
9	PIPE9NRDYE	0	R/W	NRDY Interrupt Enable for PIPE9 0: Interrupt output disabled 1: Interrupt output enabled
8	PIPE8NRDYE	0	R/W	NRDY Interrupt Enable for PIPE8 0: Interrupt output disabled 1: Interrupt output enabled
7	PIPE7NRDYE	0	R/W	NRDY Interrupt Enable for PIPE7 0: Interrupt output disabled 1: Interrupt output enabled
6	PIPE6NRDYE	0	R/W	NRDY Interrupt Enable for PIPE6 0: Interrupt output disabled 1: Interrupt output enabled
5	PIPE5NRDYE	0	R/W	NRDY Interrupt Enable for PIPE5 0: Interrupt output disabled 1: Interrupt output enabled
4	PIPE4NRDYE	0	R/W	NRDY Interrupt Enable for PIPE4 0: Interrupt output disabled 1: Interrupt output enabled
3	PIPE3NRDYE	0	R/W	NRDY Interrupt Enable for PIPE3 0: Interrupt output disabled 1: Interrupt output enabled
2	PIPE2NRDYE	0	R/W	NRDY Interrupt Enable for PIPE2 0: Interrupt output disabled 1: Interrupt output enabled

chanhvinh.com

Bit	Bit Name	Initial Value	R/W	Description
1	PIPE1NRDYE	0	R/W	NRDY Interrupt Enable for PIPE1 0: Interrupt output disabled 1: Interrupt output enabled
0	PIPE0NRDYE	0	R/W	NRDY Interrupt Enable for PIPE0 0: Interrupt output disabled 1: Interrupt output enabled

29.3.14 BEMP Interrupt Enable Register (BEMPENB)

BEMPENB is a register that enables or disables the BEMP bit in INTSTS0 to be set to 1 when the BEMP interrupt is detected for each pipe.

On detecting the BEMP interrupt for the pipe corresponding to the bit in this register that has been set to 1, this module sets 1 to the corresponding PIPEBEMP bit in BEMPSTS and the BEMP bit in INTSTS0, and generates the BEMP interrupt.

While at least one PIPEBEMP bit in BEMPSTS indicates 1, this module generates the BEMP interrupt when the corresponding interrupt enable bit in BEMPENB is modified from 0 to 1.

This register is initialized by a power-on reset.

Bit:	15	14	13	12	11	10	9	8	7	6	5	4	3	2	1	0
	—	—	—	—	—	—	PIPE9 BEMPE	PIPE8 BEMPE	PIPE7 BEMPE	PIPE6 BEMPE	PIPE5 BEMPE	PIPE4 BEMPE	PIPE3 BEMPE	PIPE2 BEMPE	PIPE1 BEMPE	PIPE0 BEMPE
Initial value:	0	0	0	0	0	0	0	0	0	0	0	0	0	0	0	0
R/W:	R	R	R	R	R	R	R/W	R/W	R/W	R/W	R/W	R/W	R/W	R/W	R/W	R/W

Bit	Bit Name	Initial Value	R/W	Description
15 to 10	—	All 0	R	Reserved These bits are always read as 0. The write value should always be 0.
9	PIPE9BEMPE	0	R/W	BEMP Interrupt Enable for PIPE9 0: Interrupt output disabled 1: Interrupt output enabled

chanhvinh.com

Bit	Bit Name	Initial Value	R/W	Description
8	PIPE8BEMPE	0	R/W	BEMP Interrupt Enable for PIPE8 0: Interrupt output disabled 1: Interrupt output enabled
7	PIPE7BEMPE	0	R/W	BEMP Interrupt Enable for PIPE7 0: Interrupt output disabled 1: Interrupt output enabled
6	PIPE6BEMPE	0	R/W	BEMP Interrupt Enable for PIPE6 0: Interrupt output disabled 1: Interrupt output enabled
5	PIPE5BEMPE	0	R/W	BEMP Interrupt Enable for PIPE5 0: Interrupt output disabled 1: Interrupt output enabled
4	PIPE4BEMPE	0	R/W	BEMP Interrupt Enable for PIPE4 0: Interrupt output disabled 1: Interrupt output enabled
3	PIPE3BEMPE	0	R/W	BEMP Interrupt Enable for PIPE3 0: Interrupt output disabled 1: Interrupt output enabled
2	PIPE2BEMPE	0	R/W	BEMP Interrupt Enable for PIPE2 0: Interrupt output disabled 1: Interrupt output enabled
1	PIPE1BEMPE	0	R/W	BEMP Interrupt Enable for PIPE1 0: Interrupt output disabled 1: Interrupt output enabled
0	PIPE0BEMPE	0	R/W	BEMP Interrupt Enable for PIPE0 0: Interrupt output disabled 1: Interrupt output enabled

29.3.15 SOF Output Configuration Register (SOFCFG)

SOFCFG is a register that specifies the transaction-enabled time and BRDY interrupt status clear timing.

This register is initialized by a power-on reset.

chanhvinh.com

Bit:	15	14	13	12	11	10	9	8	7	6	5	4	3	2	1	0
	—	—	—	—	—	—	—	TRNENSEL	—	BRDYM	—	—	—	—	—	—
Initial value:	0	0	0	0	0	0	0	0	0	0	0	0	0	0	0	0
R/W:	R	R	R	R	R	R	R	R/W	R	R/W	R	R	R	R	R	R

Bit	Bit Name	Initial Value	R/W	Description
15 to 9	—	All 0	R	Reserved These bits are always read as 0. The write value should always be 0.
8	TRNENSEL	0	R/W	Transaction-Enabled Time Select Selects the transaction-enabled time either for full- or low-speed communication, during which this module issues tokens in a frame. 0: For non-low-speed communication 1: For low-speed communication This bit is valid only when the host controller function is selected. Even when the host controller function is selected, the setting of this bit has no effect on the transaction-enabled time during high-speed communication. This bit should be set to 0 when the function controller function is selected.
7	—	0	R	Reserved This bit is always read as 0. The write value should always be 0.
6	BRDYM	0	R/W	BRDY Interrupt Status Clear Timing for each Pipe Specifies the timing for clearing the BRDY interrupt status for each pipe. Set the BRDYM bit during the initial settings of the USB 2.0 host/function module (before performing data communication). Do not change the setting of the BRDYM bit after data communication starts. 0: Writing 0 clears the status. 1: This module automatically clears the status when data has been read from the FIFO buffer or data has been written to the FIFO buffer.
5 to 0	—	All 0	R	Reserved These bits are always read as 0. The write value should always be 0.

chanhvinh.com

29.3.16 Interrupt Status Register 0 (INTSTS0)

INTSTS0 is a register that indicates the status of the various interrupts detected.

This register is initialized by a power-on reset. By a USB bus reset, the DVST and DVSQ[2:0] bits are initialized.

Bit:	15	14	13	12	11	10	9	8	7	6	5	4	3	2	1	0
	VBINT	RESM	SOFR	DVST	CTRT	BEMP	NRDY	BRDY	VBSTS	DVSQ[2:0]			VALID	CTSQ[2:0]		
Initial value:	0	0	0	0/1*1	0	0	0	0	0/1*3	0*2	0*2	0/1*2	0	0	0	0
R/W:	R/W*7	R/W*7	R/W*7	R/W*7	R/W*7	R	R	R	R	R	R	R	R/W*7	R	R	R

Bit	Bit Name	Initial Value	R/W	Description
15	VBINT	0	R/W*7	VBUS Interrupt Status*4*5 0: VBUS interrupts not generated 1: VBUS interrupts generated This module sets this bit to 1 on detecting a level change (high to low or low to high) in the VBUS pin input value. This module sets the VBSTS bit to indicate the VBUS pin input value. When the VBUS interrupt is generated, repeat reading the VBSTS bit until the same value is read several times to eliminate chattering.
14	RESM	0	R/W*7	Resume Interrupt Status*4*5*6 0: Resume interrupts not generated 1: Resume interrupts generated When the function controller function is selected, this module sets this bit to 1 on detecting the falling edge of the signal on the DP pin in the suspended state (DVSQ = 1XX). When the host controller function is selected, the read value is invalid.

chanhvinh.com

Bit	Bit Name	Initial Value	R/W	Description
13	SOFR	0	R/W*7	Frame Number Refresh Interrupt Status*4 0: SOF interrupts not generated 1: SOF interrupts generated (1) When the host controller function is selected This module sets this bit to 1 on updating the frame number when the UACT bit has been set to 1. (This interrupt is detected every 1 ms.) (2) When the function controller function is selected This module sets this bit to 1 on updating the frame number. (This interrupt is detected every 1 ms.) This module can detect an SOFR interrupt through the internal interpolation function even when a damaged SOF packet is received from the USB host.
12	DVST	0/1*1	R/W*7	Device State Transition Interrupt Status*4*6 0: Device state transition interrupts not generated 1: Device state transition interrupts generated When the function controller function is selected, this module updates the DVSQ value and sets this bit to 1 on detecting a change in the device state. When this interrupt is generated, clear the status before this module detects the next device state transition. When the host controller function is selected, the read value is invalid.

chanhvinh.com

Bit	Bit Name	Initial Value	R/W	Description
11	CTRT	0	R/W*7	Control Transfer Stage Transition Interrupt Status*4*6 0: Control transfer stage transition interrupts not generated 1: Control transfer stage transition interrupts generated When the function controller function is selected, this module updates the CTSQ value and sets this bit to 1 on detecting a change in the control transfer stage. When this interrupt is generated, clear the status before this module detects the next control transfer stage transition. When the host controller function is selected, the read value is invalid.
10	BEMP	0	R	Buffer Empty Interrupt Status 0: BEMP interrupts not generated 1: BEMP interrupts generated This module sets this bit to 1 when at least one PIPEBEMP bit in BEMPSTS is set to 1 among the PIPEBEMP bits corresponding to the PIPEBEMPE bits in BEMPENB to which 1 has been set (when this module detects the BEMP interrupt status in at least one pipe among the pipes for which the BEMP interrupt output is enabled). For the conditions for PIPEBEMP status assertion, refer to section 29.4.2 (3), BEMP Interrupt. This module clears this bit to 0 when 0 is written to all the PIPEBEMP bits corresponding to the PIPEBEMPE bits to which 1 has been set. This bit cannot be cleared to 0 even if 0 is written to this bit.

chanhvinh.com

Bit	Bit Name	Initial Value	R/W	Description
9	NRDY	0	R	Buffer Not Ready Interrupt Status 0: NRDY interrupts not generated 1: NRDY interrupts generated This module sets this bit to 1 when at least one PIPENRDY bit in NRDYSTS is set to 1 among the PIPENRDY bits corresponding to the PIPENRDYE bits in NRDYENB to which 1 has been set (when this module detects the NRDY interrupt status in at least one pipe among the pipes for which the NRDY interrupt output is enabled). For the conditions for PIPENRDY status assertion, refer to section 29.4.2 (2), NRDY Interrupt. This module clears this bit to 0 when 0 is written to all the PIPENRDY bits corresponding to the PIPENRDYE bits to which 1 has been set. This bit cannot be cleared to 0 even if 0 is written to this bit.
8	BRDY	0	R	Buffer Ready Interrupt Status Indicates the BRDY interrupt status. 0: BRDY interrupts not generated 1: BRDY interrupts generated This module sets this bit to 1 when at least one PIPEBRDY bit in BRDYSTS is set to 1 among the PIPEBRDY bits corresponding to the PIPEBRDYE bits in BRDYENB to which 1 has been set (when this module detects the BRDY interrupt status in at least one pipe among the pipes for which the BRDY interrupt output is enabled). For the conditions for PIPEBRDY status assertion, refer to section 29.4.2 (1), BRDY Interrupt. This module clears this bit to 0 when 0 is written to all the PIPEBRDY bits corresponding to the PIPEBRDYE bits to which 1 has been set. This bit cannot be cleared to 0 even if 0 is written to this bit.

chanhvinh.com

Bit	Bit Name	Initial Value	R/W	Description
7	VBSTS	0/1*3	R	VBUS Input Status 0: The VBUS pin is low level. 1: The VBUS pin is high level.
6 to 4	DVSQ[2:0]	000/001*2	R	Device State 000: Powered state 001: Default state 010: Address state 011: Configured state 1xx: Suspended state When the host controller function is selected, the read value is invalid.
3	VALID	0	R/W*7	USB Request Reception 0: Not detected 1: Setup packet reception When the host controller function is selected, the read value is invalid.
2 to 0	CTSQ[2:0]	000	R	Control Transfer Stage 000: Idle or setup stage 001: Control read data stage 010: Control read status stage 011: Control write data stage 100: Control write status stage 101: Control write (no data) status stage 110: Control transfer sequence error 111: Setting prohibited When the host controller function is selected, the read value is invalid.

chanhvinh.com

Notes: 1. This bit is initialized to B'0 by a power-on reset and B'1 by a USB bus reset.
2. These bits are initialized to B'000 by a power-on reset and B'001 by a USB bus reset.
3. This bit is initialized to 0 when the level of the VBUS pin input is high and 1 when low.
4. To clear the VBINT, RESM, SOFR, DVST, or CTRT bit, write 0 only to the bits to be cleared; write 1 to the other bits. Do not write 0 to the status bits indicating 0.
5. This module can detect a change in the status indicated by the VBINT and RESM bits even while the clock supply is stopped (while SCKE is 0), and outputs interrupts when the corresponding interrupt enable bits are enabled. Clearing the status should be done after enabling the clock supply.
6. A change in the status of the RESM, DVST, and CTRT bits occur only when the function controller function is selected; disable the corresponding interrupt enable bits (set to 0) when the host controller function is selected.
7. Only 0 can be written.

29.3.17 Interrupt Status Register 1 (INTSTS1)

INTSTS1 is a register that is used to confirm interrupt status.

The various interrupts indicated by the bits in this register should be enabled only when the host controller function is selected.

This register is initialized by a power-on reset.

Bit:	15	14	13	12	11	10	9	8	7	6	5	4	3	2	1	0
	—	BCHG	—	DTCH	ATTCH	—	—	—	—	EOF ERR	SIGN	SACK	—	—	—	—
Initial value:	0	0	0	0	0	0	0	0	0	0	0	0	0	0	0	0
R/W:	R	R/W*1	R	R/W*1	R/W*1	R	R	R	R	R/W*1	R/W*1	R/W*1	R	R	R	R

Bit	Bit Name	Initial Value	R/W	Description
15	—	0	R	Reserved This bit is always read as 0. The write value should always be 0.

chanhvinh.com

Bit	Bit Name	Initial Value	R/W	Description
14	BCHG	0	R/W*[1]	USB Bus Change Interrupt Status Indicates the status of the USB bus change interrupt. 0: BCHG interrupts not generated 1: BCHG interrupts generated This module detects the BCHG interrupt when a change in the full-speed or low-speed signal level occurs on the USB port (a change from J-state, K-state, or SE0 to J-state, K-state, or SE0), and sets this bit to 1. Here, if the corresponding interrupt enable bit has been set to 1, this module generates the interrupt. This module sets the LNST bits in SYSSTS0 to indicate the current input state of the USB port. When the BCHG interrupt is generated, repeat reading the LNST bits until the same value is read several times, and eliminate chattering. A change in the USB bus state can be detected even while the internal clock supply is stopped. When the function controller function is selected, the read value is invalid.
13	—	0	R	Reserved This bit is always read as 0. The write value should always be 0.

chanhvinh.com

Bit	Bit Name	Initial Value	R/W	Description
12	DTCH	0	R/W*[1]	USB Disconnection Detection Interrupt Status Indicates the status of the USB disconnection detection interrupt when the host controller function is selected. 0: DTCH interrupts not generated 1: DTCH interrupts generated This module detects the DTCH interrupt on detecting USB bus disconnection, and sets this bit to 1. Here, if the corresponding interrupt enable bit has been set to 1, this module generates the interrupt. This module detects bus disconnection based on USB Specification 2.0. After detecting the DTCH interrupt, this module controls hardware as described below (irrespective of the set value of the corresponding interrupt enable bit). Terminate all the pipes in which communications are currently carried out for the USB port and make a transition to the wait state for bus connection to the USB port (wait state for ATTCH interrupt generation). (1) Modifies the UACT bit to 0. (2) Causes a transition to the idle state. When the function controller function is selected, the read value is invalid.

chanhvinh.com

Bit	Bit Name	Initial Value	R/W	Description
11	ATTCH	0	R/W*[1]	ATTCH Interrupt Status Indicates the status of the ATTCH interrupt when the host controller function is selected. 0: ATTCH interrupts not generated 1: ATTCH interrupts generated When this module has generated J-state or K-state of the full-speed or low-speed level signal for 2.5 μs, this module detects the ATTCH interrupt and sets this bit to 1. Here, if the corresponding interrupt enable bit has been set to 1, this module generates the interrupt. Specifically, this module detects the ATTCH interrupt on any of the following conditions. • K-stateSE0, or SE1 changes to J-state, and J-state continues 2.5 μs. • J-state, SE0, or SE1 changes to K-state, and K-state continues 2.5 μs. When the function controller function is selected, the read value is invalid.
10 to 7	—	All 0	R	Reserved These bits are always read as 0. The write value should always be 0.

chanhvinh.com

Bit	Bit Name	Initial Value	R/W	Description
6	EOFERR	0	R/W*[1]	EOF Error Detection Interrupt Status Indicates the status of the EOFERR interrupt when the host controller function is selected. 0: EOFERR interrupt not generated 1: EOFERR interrupt generated This module detects the EOFERR interrupt on detecting that communication is not completed at the EOF2 timing prescribed by USB Specification 2.0, and sets this bit to 1. Here, if the corresponding interrupt enable bit has been set to 1, this module generates the EOFERR interrupt. After detecting the EOFERR interrupt, this module controls hardware as described below (irrespective of the set value of the corresponding interrupt enable bit). Terminate all the pipes in which communications are currently carried for the USB port and perform re-enumeration of the USB port. (1) Modifies the UACT bit to 0. (2) Causes a transition to the idle state. When the function controller function is selected, the read value is invalid.

chanhvinh.com

Bit	Bit Name	Initial Value	R/W	Description
5	SIGN	0	R/W*[1]	Setup Transaction Error Interrupt Status Indicates the status of the setup transaction error interrupt when the host controller function is selected. 0: SIGN interrupts not generated 1: SIGN interrupts generated This module detects the SIGN interrupt when ACK response is not returned from the peripheral device three consecutive times during the setup transactions issued by this module, and sets this bit to 1. Here, if the corresponding interrupt enable bit has been set to 1, this module generates the SIGN interrupt. Specifically, this module detects the SIGN interrupt when any of the following response conditions occur for three consecutive setup transactions. • Timeout is detected when the peripheral device has returned no response. • A damaged ACK packet is received. • A handshake other than ACK (NAK, NYET, or STALL) is received. When the function controller function is selected, the read value is invalid.

chanhvinh.com

Bit	Bit Name	Initial Value	R/W	Description
4	SACK	0	R/W*1	Setup Transaction Normal Response Interrupt Status Indicates the status of the setup transaction normal response interrupt when the host controller function is selected. 0: SACK interrupts not generated 1: SACK interrupts generated This module detects the SACK interrupt when ACK response is returned from the peripheral device during the setup transactions issued by this module, and sets this bit to 1. Here, if the corresponding interrupt enable bit has been set to 1, this module generates the SACK interrupt.
3 to 0	—	All 0	R	Reserved These bits are always read as 0. The write value should always be 0.

Notes: 1. Only 0 can be written.
2. This module can detect a change in the status indicated by the BCHG bit even while the clock supply is stopped (while SCKE is 0), and outputs an interrupt when the corresponding interrupt enable bit is enabled. Clearing the status should be done after enabling the clock supply.
No interrupts other than BCHG can be detected while the clock supply is stopped (while SCKE is 0).

29.3.18 BRDY Interrupt Status Register (BRDYSTS)

BRDYSTS is a register that indicates the BRDY interrupt status for each pipe.

This register is initialized by a power-on reset.

Bit:	15	14	13	12	11	10	9	8	7	6	5	4	3	2	1	0
	—	—	—	—	—	—	PIPE9 BRDY	PIPE8 BRDY	PIPE7 BRDY	PIPE6 BRDY	PIPE5 BRDY	PIPE4 BRDY	PIPE3 BRDY	PIPE2 BRDY	PIPE1 BRDY	PIPE0 BRDY
Initial value:	0	0	0	0	0	0	0	0	0	0	0	0	0	0	0	0
R/W:	R	R	R	R	R	R	R/W*1	R/W*1	R/W*1	R/W*1	R/W*1	R/W*1	R/W*1	R/W*1	R/W*1	R/W*1

chanhvinh.com

Bit	Bit Name	Initial Value	R/W	Description
15 to 10	—	All 0	R	Reserved These bits are always read as 0. The write value should always be 0.
9	PIPE9BRDY	0	R/W*[1]	BRDY Interrupt Status for PIPE9*[2] 0: Interrupts not generated 1: Interrupts generated
8	PIPE8BRDY	0	R/W*[1]	BRDY Interrupt Status for PIPE8*[2] 0: Interrupts not generated 1: Interrupts generated
7	PIPE7BRDY	0	R/W*[1]	BRDY Interrupt Status for PIPE7*[2] 0: Interrupts not generated 1: Interrupts generated
6	PIPE6BRDY	0	R/W*[1]	BRDY Interrupt Status for PIPE6*[2] 0: Interrupts not generated 1: Interrupts generated
5	PIPE5BRDY	0	R/W*[1]	BRDY Interrupt Status for PIPE5*[2] 0: Interrupts not generated 1: Interrupts generated
4	PIPE4BRDY	0	R/W*[1]	BRDY Interrupt Status for PIPE4*[2] 0: Interrupts not generated 1: Interrupts generated
3	PIPE3BRDY	0	R/W*[1]	BRDY Interrupt Status for PIPE3*[2] 0: Interrupts not generated 1: Interrupts generated
2	PIPE2BRDY	0	R/W*[1]	BRDY Interrupt Status for PIPE2*[2] 0: Interrupts not generated 1: Interrupts generated

chanhvinh.com

Bit	Bit Name	Initial Value	R/W	Description
1	PIPE1BRDY	0	R/W*[1]	BRDY Interrupt Status for PIPE1*[2] 0: Interrupts not generated 1: Interrupts generated
0	PIPE0BRDY	0	R/W*[1]	BRDY Interrupt Status for PIPE0*[2] 0: Interrupts not generated 1: Interrupts generated

Notes: 1. Only 0 can be written.
2. When BRDYM is 0, clearing this bit should be done before accessing the FIFO.

29.3.19 NRDY Interrupt Status Register (NRDYSTS)

NRDYSTS is a register that indicates the NRDY interrupt status for each pipe.

This register is initialized by a power-on reset.

Bit:	15	14	13	12	11	10	9	8	7	6	5	4	3	2	1	0
	—	—	—	—	—	—	PIPE9 NRDY	PIPE8 NRDY	PIPE7 NRDY	PIPE6 NRDY	PIPE5 NRDY	PIPE4 NRDY	PIPE3 NRDY	PIPE2 NRDY	PIPE1 NRDY	PIPE0 NRDY
Initial value:	0	0	0	0	0	0	0	0	0	0	0	0	0	0	0	0
R/W:	R	R	R	R	R	R	R/W*	R/W*	R/W*	R/W*	R/W*	R/W*	R/W*	R/W*	R/W*	R/W*

Bit	Bit Name	Initial Value	R/W	Description
15 to 10	—	All 0	R	Reserved These bits are always read as 0. The write value should always be 0.
9	PIPE9NRDY	0	R/W*	NRDY Interrupt Status for PIPE9 0: Interrupts not generated 1: Interrupts generated
8	PIPE8NRDY	0	R/W*	NRDY Interrupt Status for PIPE8 0: Interrupts not generated 1: Interrupts generated

chanhvinh.com

Bit	Bit Name	Initial Value	R/W	Description
7	PIPE7NRDY	0	R/W*	NRDY Interrupt Status for PIPE7 0: Interrupts not generated 1: Interrupts generated
6	PIPE6NRDY	0	R/W*	NRDY Interrupt Status for PIPE6 0: Interrupts not generated 1: Interrupts generated
5	PIPE5NRDY	0	R/W*	NRDY Interrupt Status for PIPE5 0: Interrupts not generated 1: Interrupts generated
4	PIPE4NRDY	0	R/W*	NRDY Interrupt Status for PIPE4 0: Interrupts not generated 1: Interrupts generated
3	PIPE3NRDY	0	R/W*	NRDY Interrupt Status for PIPE3 0: Interrupts not generated 1: Interrupts generated
2	PIPE2NRDY	0	R/W*	NRDY Interrupt Status for PIPE2 0: Interrupts not generated 1: Interrupts generated
1	PIPE1NRDY	0	R/W*	NRDY Interrupt Status for PIPE1 0: Interrupts not generated 1: Interrupts generated
0	PIPE0NRDY	0	R/W*	NRDY Interrupt Status for PIPE0 0: Interrupts not generated 1: Interrupts generated

Note: * Only 0 can be written.

chanhvinh.com

29.3.20 BEMP Interrupt Status Register (BEMPSTS)

BEMPSTS is a register that indicates the BEMP interrupt status for each pipe.

This register is initialized by a power-on reset.

Bit:	15	14	13	12	11	10	9	8	7	6	5	4	3	2	1	0
	—	—	—	—	—	—	PIPE9 BEMP	PIPE8 BEMP	PIPE7 BEMP	PIPE6 BEMP	PIPE5 BEMP	PIPE4 BEMP	PIPE3 BEMP	PIPE2 BEMP	PIPE1 BEMP	PIPE0 BEMP
Initial value:	0	0	0	0	0	0	0	0	0	0	0	0	0	0	0	0
R/W:	R	R	R	R	R	R	R/W*	R/W*	R/W*	R/W*	R/W*	R/W*	R/W*	R/W*	R/W*	R/W*

Bit	Bit Name	Initial Value	R/W	Description
15 to 10	—	All 0	R	Reserved These bits are always read as 0. The write value should always be 0.
9	PIPE9BEMP	0	R/W*	BEMP Interrupts for PIPE9 0: Interrupts not generated 1: Interrupts generated
8	PIPE8BEMP	0	R/W*	BEMP Interrupts for PIPE8 0: Interrupts not generated 1: Interrupts generated
7	PIPE7BEMP	0	R/W*	BEMP Interrupts for PIPE7 0: Interrupts not generated 1: Interrupts generated
6	PIPE6BEMP	0	R/W*	BEMP Interrupts for PIPE6 0: Interrupts not generated 1: Interrupts generated
5	PIPE5BEMP	0	R/W*	BEMP Interrupts for PIPE5 0: Interrupts not generated 1: Interrupts generated
4	PIPE4BEMP	0	R/W*	BEMP Interrupts for PIPE4 0: Interrupts not generated 1: Interrupts generated

chanhvinh.com

Bit	Bit Name	Initial Value	R/W	Description
3	PIPE3BEMP	0	R/W*	BEMP Interrupts for PIPE3 0: Interrupts not generated 1: Interrupts generated
2	PIPE2BEMP	0	R/W*	BEMP Interrupts for PIPE2 0: Interrupts not generated 1: Interrupts generated
1	PIPE1BEMP	0	R/W*	BEMP Interrupts for PIPE1 0: Interrupts not generated 1: Interrupts generated
0	PIPE0BEMP	0	R/W*	BEMP Interrupts for PIPE0 0: Interrupts not generated 1: Interrupts generated

Note: * Only 0 can be written.

29.3.21 Frame Number Register (FRMNUM)

FRMNUM is a register that determines the source of isochronous error notification and indicates the frame number.

This register is initialized by a power-on reset.

Bit:	15	14	13	12	11	10	9	8	7	6	5	4	3	2	1	0
	OVRN	CRCE	—	—	—	FRNM[10:0]										
Initial value:	0	0	0	0	0	0	0	0	0	0	0	0	0	0	0	0
R/W:	R/W*	R/W*	R	R	R	R	R	R	R	R	R	R	R	R	R	R

chanhvinh.com

Bit	Bit Name	Initial Value	R/W	Description
15	OVRN	0	R/W*	Overrun/Underrun Detection Status Indicates whether an overrun/underrun error has been detected in the pipe during isochronous transfer. 0: No error 1: An error occurred This bit can be cleared to 0 by writing 0 to the bit. (1) When the host controller function is selected This module sets this bit to 1 on any of the following conditions. • For the isochronous transfer pipe in the transmitting direction, the time to issue an OUT token comes before all the transmit data has been written to the FIFO buffer. • For the isochronous transfer pipe in the receiving direction, the time to issue an IN token comes when no FIFO buffer planes are empty. (2) When the function controller function is selected This module sets this bit to 1 on any of the following conditions. • For the isochronous transfer pipe in the transmitting direction, the IN token is received before all the transmit data has been written to the FIFO buffer. • For the isochronous transfer pipe in the receiving direction, the OUT token is received when no FIFO buffer planes are empty. Note: This bit is provided for debugging. The system should be designed so that no overrun/underrun should occur.

chanhvinh.com

Bit	Bit Name	Initial Value	R/W	Description
14	CRCE	0	R/W*	Receive Data Error Indicates whether a CRC error or bit stuffing error has been detected in the pipe during isochronous transfer. Simultaneously with error detection, the internal NRDY interrupt request is generated. For details, see section 29.4.2, Interrupt Functions. 0: No error 1: An error occurred
13 to 11	—	All 0	R	Reserved These bits are always read as 0. The write value should always be 0.
10 to 0	FRNM[10:0]	H'000	R	Frame Number This module sets these bits to indicate the latest frame number, which is updated every time an SOF packet is issued or received (every 1 ms) Read these bits twice to check that the same value is read.

Note: * Only 0 can be written.

chanhvinh.com

29.3.22 μFrame Number Register (UFRMNUM)

UFRMNUM is a register that indicates the μframe number.

This register is initialized by a power-on reset.

Bit:	15	14	13	12	11	10	9	8	7	6	5	4	3	2	1	0
	—	—	—	—	—	—	—	—	—	—	—	—	—	UFRNM[2:0]		
Initial value:	0	0	0	0	0	0	0	0	0	0	0	0	0	0	0	0
R/W:	R	R	R	R	R	R	R	R	R	R	R	R	R	R	R	R

Bit	Bit Name	Initial Value	R/W	Description
15 to 3	—	All 0	R	Reserved These bits are always read as 0. The write value should always be 0.
2 to 0	UFRNM[2:0]	000	R	μFrame The μframe number can be confirmed. This module sets these bits to indicate the μframe number during high-speed operation. During operation other than high-speed operation, this module sets these bits to B'000. Read these bits twice to check that the same value is read.

chanhvinh.com

29.3.23 USB Address Register (USBADDR)

USBADDR is a register that indicates the USB address. This register is valid only when the function controller function is selected. When the host controller function is selected, peripheral device addresses should be set using the DEVSEL bits in PIPEMAXP.

This register is initialized by a power-on reset or a USB bus reset.

Bit:	15	14	13	12	11	10	9	8	7	6	5	4	3	2	1	0
	—	—	—	—	—	—	—	—	—	USBADDR[6:0]						
Initial value:	0	0	0	0	0	0	0	0	0	0	0	0	0	0	0	0
R/W:	R	R	R	R	R	R	R	R	R	R	R	R	R	R	R	R

Bit	Bit Name	Initial Value	R/W	Description
15 to 7	—	All 0	R	Reserved These bits are always read as 0. The write value should always be 0.
6 to 0	USBADDR [6:0]	H'00	R	USB Address When the function controller function is selected, these bits indicate the USB address assigned by the host when the SET_ADDRESS request is successfully processed.

chanhvinh.com

29.3.24 USB Request Type Register (USBREQ)

USBREQ is a register that stores setup requests for control transfers. When the function controller function is selected, the values of bRequest and bmRequestType that have been received are stored. When the host controller function is selected, the values of bRequest and bmRequestType to be transmitted are set.

This register is initialized by a power-on reset or a USB bus reset.

Bit:	15	14	13	12	11	10	9	8	7	6	5	4	3	2	1	0
	BREQUEST[7:0]								BMREQUESTTYPE[7:0]							
Initial value:	0	0	0	0	0	0	0	0	0	0	0	0	0	0	0	0
R/W:	R/W*	R/W*	R/W*	R/W*	R/W*	R/W*	R/W*	R/W*	R/W*	R/W*	R/W*	R/W*	R/W*	R/W*	R/W*	R/W*

Bit	Bit Name	Initial Value	R/W	Description
15 to 8	BREQUEST [7:0]	H'00	R/W*	Request These bits store the USB request bRequest value. (1) When the host controller function is selected The USB request data value for the setup transaction to be transmitted should be set in these bits. After setting SUREQ to 1, do not modify these bits until 0 is read from SUREQ. (2) When the function controller function is selected Indicates the USB request data value received during the setup transaction. Writing to these bits is invalid.
7 to 0	BMREQUEST-TYPE[7:0]	H'00	R/W*	Request Type These bits store the USB request bmRequestType value. (1) When the host controller function is selected The USB request type value for the setup transaction to be transmitted should be set in these bits. After setting SUREQ to 1, do not modify these bits until 0 is read from SUREQ. (2) When the function controller function is selected Indicates the USB request type value received during the setup transaction. Writing to these bits is invalid.

Note: * When the function controller function is selected, these bits can only be read, and writing to these bits is invalid. When the host controller function is selected, these bits can be read and written to.

chanhvinh.com

29.3.25 USB Request Value Register (USBVAL)

USBVAL is a register that stores setup requests for control transfers. When the function controller function is selected, the value of wValue that has been received is stored. When the host controller function is selected, the value of wValue to be transmitted is set.

This register is initialized by a power-on reset or a USB bus reset.

Bit:	15	14	13	12	11	10	9	8	7	6	5	4	3	2	1	0
	WVALUE[15:0]															
Initial value:	0	0	0	0	0	0	0	0	0	0	0	0	0	0	0	0
R/W:	R/W*	R/W*	R/W*	R/W*	R/W*	R/W*	R/W*	R/W*	R/W*	R/W*	R/W*	R/W*	R/W*	R/W*	R/W*	R/W*

Bit	Bit Name	Initial Value	R/W	Description
15 to 0	WVALUE[15:0]	H'0000	R/W*	Value These bits store the USB request wValue value. (1) When the host controller function is selected The USB request wValue value for the setup transaction to be transmitted should be set in these bits. After setting SUREQ to 1, do not modify these bits until 0 is read from SUREQ. (2) When the function controller function is selected Indicates the USB request wValue value received during the setup transaction. Writing to these bits is invalid.

Note: * When the function controller function is selected, these bits can only be read, and writing to these bits is invalid. When the host controller function is selected, these bits can be read and written to.

chanhvinh.com

29.3.26 USB Request Index Register (USBINDX)

USBINDEX is a register that stores setup requests for control transfers. When the function controller function is selected, the value of wIndex that has been received is stored. When the host controller function is selected, the value of wIndex to be transmitted is set.

This register is initialized by a power-on reset or a USB bus reset.

Bit:	15	14	13	12	11	10	9	8	7	6	5	4	3	2	1	0
	WINDEX[15:0]															
Initial value:	0	0	0	0	0	0	0	0	0	0	0	0	0	0	0	0
R/W:	R/W*	R/W*	R/W*	R/W*	R/W*	R/W*	R/W*	R/W*	R/W*	R/W*	R/W*	R/W*	R/W*	R/W*	R/W*	R/W*

Bit	Bit Name	Initial Value	R/W	Description
15 to 0	WINDEX[15:0]	H'0000	R/W*	Index These bits store the USB request wIndex value. (1) When the host controller function is selected The USB request wIndex value for the setup transaction to be transmitted should be set in these bits. After setting SUREQ to 1, do not modify these bits until 0 is read from SUREQ. (2) When the function controller function is selected Indicates the USB request wIndex value received during the setup transaction. Writing to these bits is invalid.

Note: * When the function controller function is selected, these bits can only be read, and writing to these bits is invalid. When the host controller function is selected, these bits can be read and written to.

chanhvinh.com

29.3.27 USB Request Length Register (USBLENG)

USBLENG is a register that stores setup requests for control transfers. When the function controller function is selected, the value of wLength that has been received is stored. When the host controller function is selected, the value of wLength to be transmitted is set.

This register is initialized by a power-on reset or a USB bus reset.

Bit:	15	14	13	12	11	10	9	8	7	6	5	4	3	2	1	0
	WLENGTH[15:0]															
Initial value:	0	0	0	0	0	0	0	0	0	0	0	0	0	0	0	0
R/W:	R/W*	R/W*	R/W*	R/W*	R/W*	R/W*	R/W*	R/W*	R/W*	R/W*	R/W*	R/W*	R/W*	R/W*	R/W*	R/W*

Bit	Bit Name	Initial Value	R/W	Description
15 to 0	WLENGTH [15:0]	H'0000	R/W*	Length These bits store the USB request wLength value. (1) When the host controller function is selected The USB request wLength value for the setup transaction to be transmitted should be set in these bits. After setting SUREQ to 1, do not modify these bits until 0 is read from SUREQ. (2) When the function controller function is selected Indicates the USB request wLength value received during the setup transaction. Writing to these bits is invalid.

Note: * When the function controller function is selected, these bits can only be read, and writing to these bits is invalid. When the host controller function is selected, these bits can be read and written to.

chanhvinh.com

29.3.28 DCP Configuration Register (DCPCFG)

DCPCFG is a register that specifies the data transfer direction for the default control pipe (DCP).

This register is initialized by a power-on reset.

Bit:	15	14	13	12	11	10	9	8	7	6	5	4	3	2	1	0
	—	—	—	—	—	—	—	—	—	—	—	DIR	—	—	—	—
Initial value:	0	0	0	0	0	0	0	0	0	0	0	0	0	0	0	0
R/W:	R	R	R	R	R	R	R	R	R	R	R	R/W	R	R	R	R

Bit	Bit Name	Initial Value	R/W	Description
15 to 5	—	All 0	R	Reserved These bits are always read as 0. The write value should always be 0.
4	DIR	0	R/W	Transfer Direction When the host controller function is selected, this bit sets the transfer direction of data stage. 0: Data receiving direction 1: Data transmitting direction When the function controller function is selected, this bit should be cleared to 0.
3 to 0	—	All 0	R	Reserved These bits are always read as 0. The write value should always be 0.

chanhvinh.com

29.3.29 DCP Maximum Packet Size Register (DCPMAXP)

DCPMAXP is a register that specifies the maximum packet size for the DCP.

This register is initialized by a power-on reset.

Bit:	15	14	13	12	11	10	9	8	7	6	5	4	3	2	1	0
	DEVSEL[3:0]				—	—	—	—	—	MXPS[6:0]						
Initial value:	0	0	0	0	0	0	0	0	0	1	0	0	0	0	0	0
R/W:	R/W	R/W	R/W	R/W	R	R	R	R	R	R/W	R/W	R/W	R/W	R	R	R

Bit	Bit Name	Initial Value	R/W	Description
15 to 12	DEVSEL[3:0]	0000	R/W	Device Select When the host controller function is selected, these bits specify the communication target peripheral device address. 0000: Address 0000 0001: Address 0001 : : 1001: Address 1001 1010: Address 1010 Other than above: Setting prohibited These bits should be set after setting the DEVADDn register corresponding to the value to be set in these bits. For example, before setting DEVSEL to 0010 the DEVADD2 register should be set. These bits should be set while CSSTS is 0, PID is NAK, and SUREQ is 0. Before modifying these bits after modifying the PID bits for the DCP from BUF to NAK, check that CSSTS and PBUSY are 0. However, if the PID bits have been modified to NAK by this module, checking PBUSY is not necessary. When the function controller function is selected, these bits should be set to B'0000.

chanhvinh.com

Bit	Bit Name	Initial Value	R/W	Description
11 to 7	—	All 0	R	Reserved These bits are always read as 0. The write value should always be 0.
6 to 0	MXPS[6:0]	H'40	R/W	Maximum Packet Size Specifies the maximum data payload (maximum packet size) for the DCP. These bits are initialized to H'40 (64 bytes). These bits should be set to the value based on the USB Specification. These bits should be set while CSSTS is 0 and PID is NAK. Before modifying these bits after modifying the PID bits for the DCP from BUF to NAK, check that CSSTS and PBUSY are 0. However, if the PID bits have been modified to NAK by this module, checking PBUSY is not necessary. While MXPS is 0, do not write to the FIFO buffer or do not set PID to BUF.

29.3.30 DCP Control Register (DCPCTR)

DCPCTR is a register that is used to confirm the buffer memory status, change and confirm the data PID sequence bit, and set the response PID for the DCP.

This register is initialized by a power-on reset. The CCPL and PID[1:0] bits are initialized by a USB bus reset.

Bit:	15	14	13	12	11	10	9	8	7	6	5	4	3	2	1	0
	BSTS	SUREQ	CSCLR	CSSTS	SUREQ CLR	—	—	SQCLR	SQSET	SQMON	PBUSY	PINGE	—	CCPL	PID[1:0]	
Initial value:	0	0	0	0	0	0	0	0	0	1	0	0	0	0	0	0
R/W:	R	R/W*2	R/W*1	R	R/W*1	R	R	R/W*1	R/W*1	R	R	R/W	R	R/W*1	R/W	R/W

chanhvinh.com

Bit	Bit Name	Initial Value	R/W	Description
15	BSTS	0	R	Buffer Status Indicates whether DCP FIFO buffer access is enabled or disabled. 0: Buffer access is disabled. 1: Buffer access is enabled. The meaning of the BSTS bit depends on the ISEL bit setting as follows. • When ISEL = 0, BSTS indicates whether the received data can be read from the buffer. • When ISEL = 1, BSTS indicates whether the data to be transmitted can be written to the buffer.
14	SUREQ	0	R/W*2	SETUP Token Transmission Transmits the setup packet by setting this bit to 1 when the host controller function is selected. 0: Invalid 1: Transmits the setup packet. After completing the setup transaction process, this module generates either the SACK or SIGN interrupt and clears this bit to 0. This module also clears this bit to 0 when the SUREQCLR bit is set to 1. Before setting this bit to 1, set the DEVSEL bits, USBREQ register, USBVAL register, USBINDX register, and USBLENG register appropriately to transmit the desired USB request in the setup transaction. Before setting this bit to 1, check that the PID bits for the DCP are set to NAK. After setting this bit to 1, do not modify the DEVSEL bits, USBREQ register, USBVAL register, USBINDX register, or USBLENG register until the setup transaction is completed (SUREQ = 1). Write 1 to this bit only when transmitting the setup token; for the other purposes, write 0. When the function controller function is selected, be sure to write 0 to this bit.

chanhvinh.com

Bit	Bit Name	Initial Value	R/W	Description
13	CSCLR	0	R/W*[1]	C-SPLIT Status Clear for Split Transaction When the host controller function is selected, setting this bit to 1 clears the CSSTS bit to 0 for the transfer using the split transaction. In this case, the next DCP transfer restarts with the S-SPLIT. 0: Invalid 1: Clears the CSSTS bit to 0. When this bit is set to 1, this module clears the CSSTS bit to 0. For the transfer using the split transaction, to restart the next transfer with the S-SPLIT forcibly, set this bit to 1. However, for the normal split transaction, this module automatically clears the CSSTS bit to 0 upon completion of the C-SPLIT; therefore, clearing the CSSTS bit is not necessary. Controlling the CSSTS bit through this bit must be done while UACT is 0 and thus communication is halted or while no transfer is being performed with bus disconnection detected. Setting this bit to 1 while CSSTS is 0 has no effect. When the function controller function is selected, be sure to write 0 to this bit.
12	CSSTS	0	R	COMPLETE SPLIT (C-SPLIT) Status of Split Transaction Indicates the C-SPLIT status of the split transaction when the host controller function is selected. 0: START-SPLIT (S-SPLIT) transaction being processed or the device not using the split transaction being processed 1: C-SPLIT transaction being processed This module sets this bit to 1 upon start of the C-SPLIT and clears this bit to 0 upon detection of C-SPLIT completion. When the function controller function is selected, the read value is invalid.

chanhvinh.com

Bit	Bit Name	Initial Value	R/W	Description
11	SUREQCLR	0	R/W*[1]	SUREQ Bit Clear When the host controller function is selected, setting this bit to 1 clears the SUREQ bit to 0. 0: Invalid 1: Clears the SUREQ bit to 0. This bit always indicates 0. Set this bit to 1 when communication has stopped with SUREQ being 1 during the setup transaction. However, for normal setup transactions, this module automatically clears the SUREQ bit to 0 upon completion of the transaction; therefore, clearing the SUREQ bit is not necessary. Controlling the SUREQ bit through this bit must be done while UACT is 0 and thus communication is halted or while no transfer is being performed with bus disconnection detected. When the function controller function is selected, be sure to write 0 to this bit.
10, 9	—	All 0	R	Reserved These bits are always read as 0. The write value should always be 0.

chanhvinh.com

Bit	Bit Name	Initial Value	R/W	Description
8	SQCLR	0	R/W*[1]	Toggle Bit Clear Specifies DATA0 as the expected value of the sequence toggle bit for the next transaction during the DCP transfer. 0: Invalid 1: Specifies DATA0. This bit always indicates 0. Do not set the SQCLR and SQSET bits to 1 simultaneously. Set this bit to 1 while CSCTS is 0 and PID is NAK. Before setting this bit to 1 after modifying the PID bits for the DCP from BUF to NAK, check that CSSTS and PBUSY are 0. However, if the PID bits have been modified to NAK by this module, checking PBUSY is not necessary.
7	SQSET	0	R/W*[1]	Toggle Bit Set Specifies DATA1 as the expected value of the sequence toggle bit for the next transaction during the DCP transfer. 0: Invalid 1: Specifies DATA1. Do not set the SQCLR and SQSET bits to 1 simultaneously. Set this bit to 1 while CSSTS is 0 and PID is NAK. Before setting this bit to 1 after modifying the PID bits for the DCP from BUF to NAK, check that CSSTS and PBUSY are 0. However, if the PID bits have been modified to NAK by this module, checking PBUSY is not necessary.

chanhvinh.com

Bit	Bit Name	Initial Value	R/W	Description
6	SQMON	1	R	Sequence Toggle Bit Monitor Indicates the expected value of the sequence toggle bit for the next transaction during the DCP transfer. 0: DATA0 1: DATA1 This module allows this bit to toggle upon normal completion of the transaction. However, this bit is not allowed to toggle when a DATA-PID disagreement occurs during the transfer in the receiving direction. When the function controller function is selected, this module sets this bit to 1 (specifies DATA1 as the expected value) upon normal reception of the setup packet. When the function controller function is selected, this module does not reference to this bit during the IN/OUT transaction of the status stage, and does not allow this bit to toggle upon normal completion.
5	PBUSY	0	R	Pipe Busy This bit indicates whether or not a transaction using the pertinent pipe is currently in progress. 0: The pertinent pipe is not in use by a transaction. 1: The pertinent pipe is in use by a transaction. The USB 2.0 host/function module changes the setting of the PBUSY bit from 0 to 1 when a USB transaction using the DCP starts. It clears the PBUSY bit from 1 to 0 when one transaction completes successfully. Reading this bit after setting PID to NAK allows checking that modification of the pipe settings is possible. For details, refer to section 29.4.3 (1), Pipe Control Register Switching Procedures.

chanhvinh.com

Bit	Bit Name	Initial Value	R/W	Description
4	PINGE	0	R/W	PING Token Issue Enable When the host controller function is selected, setting this bit to 1 allows this module to issue the PING token during transfers in the transmitting direction and start a transfer in the transmitting direction with the PING transaction. 0: Disables issuing PING token. 1: Enables normal PING operation. When having detected the ACK handshake during PING transactions, this module performs the OUT transaction as the next transaction. When having detected the NAK handshake during OUT transactions, this module performs the PING transaction as the next transaction. When the host controller function is selected, setting this bit to 0 prevents this module from issuing the PING token during transfers in the transmitting direction and only allows this module to perform OUT transactions for the transfers in the transmitting direction. These bits should be modified while CSSTS is 0 and PID is NAK. Before changing the value of this bit after changing the PID bits for the DCP from BUF to NAK, confirm that CSSTS and PBUSY are both cleared to 0. However, if the PID bits have been modified to NAK by this module, checking PBUSY is not necessary. When the function controller function is selected, be sure to write 0 to this bit.
3	—	0	R	Reserved This bit is always read as 0. The write value should always be 0.

chanhvinh.com

Bit	Bit Name	Initial Value	R/W	Description
2	CCPL	0	R/W*[1]	Control Transfer End Enable When the function controller function is selected, setting this bit to 1 enables the status stage of the control transfer to be completed. 0: Invalid 1: Completion of control transfer is enabled. When this bit is set to 1 while the corresponding PID bits are set to BUF, this module completes the control transfer stage. Specifically, during control read transfer, this module transmits the ACK handshake in response to the OUT transaction from the USB host, and outputs the zero-length packet in response to the IN transaction from the USB host during control write or no-data control transfer. However, on detecting the SET_ADDRESS request, this module operates in auto response mode from the setup stage up to the status stage completion irrespective of the setting of this bit. This module modifies this bit from 1 to 0 on receiving the new setup packet. A 1 cannot be written to this bit while VALID is 1. When the host controller function is selected, be sure to write 0 to this bit.

chanhvinh.com

Bit	Bit Name	Initial Value	R/W	Description
1, 0	PID[1:0]	00	R/W	Response PID Controls the response type of this module during control transfer. 00: NAK response 01: BUF response (depending on the buffer state) 10: STALL response 11: STALL response (1) When the host controller function is selected Modify the setting of these bits from NAK to BUF using the following procedure. • When the transmitting direction is set Write all the transmit data to the FIFO buffer while UACT is 1 and PID is NAK, and then set PID to BUF. After PID has been set to BUF, this module executes the OUT transaction (or PING transaction). • When the receiving direction is set Check that the FIFO buffer is empty (or empty the buffer) while UACT is 1 and PID is NAK, and then set PID to BUF. After PID has been set to BUF, this module executes the IN transaction. This module modifies the setting of these bits as follows. • This module sets PID to STALL (11) on receiving the data of the size exceeding the maximum packet size when PID has been set to BUF. • This module sets PID to NAK on detecting a receive error such as a CRC error three consecutive times. • This module also sets PID to STALL (11) on receiving the STALL handshake.

chanhvinh.com

Bit	Bit Name	Initial Value	R/W	Description
1, 0	PID[1:0]	00	R/W	Even if the PID bits have been modified to NAK after this module has issued S-SPLIT of the split transaction for the selected pipe (while CSSTS indicates 1), this module continues the transaction until C-SPLIT completes. On completion of C-SPLIT, this module sets PID to NAK. (2) When the function controller function is selected This module modifies the setting of these bits as follows. • This module modifies PID to NAK on receiving the setup packet. Here, this module sets VALID to 1. PID cannot be modified until VALID is set to 0. • This module sets PID to STALL (11) on receiving the data of the size exceeding the maximum packet size when PID has been set to BUF. • This module sets PID to STALL (1x) on detecting the control transfer sequence error. • This module sets PID to NAK on detecting the USB bus reset. This module does not reference to the setting of the PID bits while the SET_ADDRESS request is processed (auto processing).

Notes: 1. This bit is always read as 0. Only 1 can be written.
2. Only 1 can be written.

chanhvinh.com

29.3.31 Pipe Window Select Register (PIPESEL)

PIPE1 to PIPE 9 should be set using PIPESEL, PIPECFG, PIPEBUF, PIPEMAXP, PIPEPERI, PIPEnCTR, PIPEnTRE, and PIPEnTRN. After selecting the pipe using PIPESEL, functions of the pipe should be set using PIPECFG, PIPEBUF, PIPEMAXP, and PIPEPERI. PIPEnCTR, PIPEnTRE, and PIPEnTRN can be set regardless of the pipe selection in PIPESEL.

This register is initialized by a power-on reset.

Bit:	15	14	13	12	11	10	9	8	7	6	5	4	3	2	1	0
	—	—	—	—	—	—	—	—	—	—	—	—	PIPESEL[3:0]			
Initial value:	0	0	0	0	0	0	0	0	0	0	0	0	0	0	0	0
R/W:	R	R	R	R	R	R	R	R	R	R	R	R	R/W	R/W	R/W	R/W

Bit	Bit Name	Initial Value	R/W	Description
15 to 4	—	All 0	R	Reserved These bits are always read as 0. The write value should always be 0.
3 to 0	PIPESEL[3:0]	0000	R/W	Pipe Window Select Setting 0001 to 1001to these bits, the PIPECFG, PIPEBUF, PIPEMAXP, and PIPEPERI registers, these registers indicate the information or set values of the corresponding pipe. 0000: No pipe selected 0001: PIPE1 0010: PIPE2 0011: PIPE3 0100: PIPE4 0101: PIPE5 0110: PIPE6 0111: PIPE7 1000: PIPE8 1001: PIPE9 Other than above: Setting prohibited Setting 0000 to these bits, the PIPECFG, PIPEBUF, PIPEMAXP, and PIPEPERI registers all indicate 0. Here, writing to these registers are invalid.

chanhvinh.com

29.3.32 Pipe Configuration Register (PIPECFG)

PIPECFG is a register that specifies the transfer type, buffer memory access direction, and endpoint numbers for PIPE1 to PIPE9. It also selects continuous or non-continuous transfer mode, single or double buffer mode, and whether to continue or disable pipe operation at the end of transfer.

This register is initialized by a power-on reset.

Bit:	15	14	13	12	11	10	9	8	7	6	5	4	3	2	1	0
	TYPE[1:0]		—	—	—	BFRE	DBLB	CNTMD	SHT NAK	—	—	DIR	EPNUM[3:0]			
Initial value:	0	0	0	0	0	0	0	0	0	0	0	0	0	0	0	0
R/W:	R/W	R/W	R	R	R	R/W	R/W	R/W	R/W	R	R	R/W	R/W	R/W	R/W	R/W

chanhvinh.com

Bit	Bit Name	Initial Value	R/W	Description
15, 14	TYPE[1:0]	00	R/W	Transfer Type Selects the transfer type for the pipe selected by the PIPESEL bits (selected pipe) • PIPE1 and PIPE2 00: Pipe cannot be used 01: Bulk transfer 10: Setting prohibited 11: Isochronous transfer • PIPE3 to PIPE5 00: Pipe cannot be used 01: Bulk transfer 10: Setting prohibited 11: Setting prohibited • PIPE6 and PIPE7 00: Pipe cannot be used 01: Setting prohibited 10: Interrupt transfer 11: Setting prohibited Before setting PID to BUF for the selected pipe (before starting USB communication using the selected pipe), be sure to set these bits to the value other than 00. Modify these bits while the PID bits for the selected pipe are set to NAK. Before modifying these bits after modifying the PID bits for the selected pipe from BUF to NAK, check that CSSTS and PBUSY are 0. However, if the PID bits have been modified to NAK by this module, checking PBUSY is not necessary.

chanhvinh.com

Bit	Bit Name	Initial Value	R/W	Description
13 to 11	—	All 0	R	Reserved These bits are always read as 0. The write value should always be 0.
10	BFRE	0	R/W	BRDY Interrupt Operation Specification Specifies the BRDY interrupt generation timing from this module to the CPU with respect to the selected pipe. 0: BRDY interrupt upon transmitting or receiving of data 1: BRDY interrupt upon completion of reading of data This bit is valid when any of pipes 1 to 5 is selected. When this bit has been set to 1 and the selected pipe is in the receiving direction, this module detects the transfer completion and generates the BRDY interrupt on having read the pertinent packet. When the BRDY interrupt is generated with the above conditions, 1 needs to be written to BCLR. The FIFO buffer assigned to the selected pipe is not enabled for reception until 1 is written to BCLR. When this bit has been set to 1 and the selected pipe is in the transmitting direction, this module does not generate the BRDY interrupt. For details, refer to section 29.4.2 (1), BRDY Interrupt. Modify these bits while CSSTS is 0 and PID is NAK and before the pipe is selected by the CURPIPE bits. To modify these bits after completing USB communication using the selected pipe, write 1 and then 0 to ACLRM continuously to clear the FIFO buffer assigned to the selected pipe while the CSSTS, PID, and CURPIPE bits are in the above-described state. Before modifying these bits after modifying the PID bits for the selected pipe from BUF to NAK, check that CSSTS and PBUSY are 0. However, if the PID bits have been modified to NAK by this module, checking PBUSY is not necessary.

chanhvinh.com

Bit	Bit Name	Initial Value	R/W	Description
9	DBLB	0	R/W	Double Buffer Mode Selects either single or double buffer mode for the FIFO buffer used by the selected pipe. 0: Single buffer 1: Double buffer This bit is valid when PIPE1 to PIPE5 are selected. When this bit has been set to 1, this module assigns two planes of the FIFO buffer size specified by the BUFSIZE bits in PIPEBUF to the selected pipe. Specifically, the following expression determines the FIFO buffer size assigned to the selected pipe by this module. (BUFSIZE + 1) × 64 × (DBLB + 1) [bytes] Modify these bits while CSSTS is 0 and PID is NAK and before the pipe is selected by the CURPIPE bits. To modify these bits after completing USB communication using the selected pipe, write 1 and then 0 to ACLRM continuously to clear the FIFO buffer assigned to the selected pipe while the CSSTS, PID, and CURPIPE bits are in the above-described state. Before modifying these bits after modifying the PID bits for the selected pipe from BUF to NAK, check that CSSTS and PBUSY are 0. However, if the PID bits have been modified to NAK by this module, checking PBUSY is not necessary.

chanhvinh.com

Bit	Bit Name	Initial Value	R/W	Description
8	CNTMD	0	R/W	Continuous Transfer Mode Specifies whether to use the selected pipe in continuous transfer mode. 0: Non-continuous transfer mode 1: Continuous transfer mode This bit is valid when PIPE1 to PIPE5 are selected by the PIPESEL bits and bulk transfer is selected (TYPE = 01). Modify these bits while CSSTS is 0 and PID is NAK and before the pipe is selected by the CURPIPE bits. To modify these bits after completing USB communication using the selected pipe, write 1 and then 0 to ACLRM continuously to clear the FIFO buffer assigned to the selected pipe while the CSSTS, PID, and CURPIPE bits are in the above-described state. Before modifying these bits after modifying the PID bits for the selected pipe from BUF to NAK, check that CSSTS and PBUSY are 0. However, if the PID bits have been modified to NAK by this module, checking PBUSY is not necessary.

chanhvinh.com

Bit	Bit Name	Initial Value	R/W	Description
7	SHTNAK	0	R/W	Pipe Disabled at End of Transfer Specifies whether to modify PID to NAK upon the end of transfer when the selected pipe is in the receiving direction. 0: Pipe continued at the end of transfer 1: Pipe disabled at the end of transfer This bit is valid when the selected pipe is PIPE1 to PIPE5 in the receiving direction. When this bit has been set to 1 for the selected pipe in the receiving direction, this module modifies the PID bits corresponding to the selected pipe to NAK on determining the end of the transfer. This module determines that the transfer has ended on any of the following conditions. • A short packet (including a zero-length packet) is successfully received. • The transaction counter is used and the number of packets specified by the counter are successfully received. Modify these bits while CSSTS is 0 and PID is NAK. Before modifying these bits after modifying the PID bits for the selected pipe from BUF to NAK, check that CSSTS and PBUSY are 0. However, if the PID bits have been modified to NAK by this module, checking PBUSY is not necessary. This bit should be cleared to 0 for the pipe in the transmitting direction.
6, 5	—	All 0	R	Reserved These bits are always read as 0. The write value should always be 0.

chanhvinh.com

Bit	Bit Name	Initial Value	R/W	Description
4	DIR	0	R/W	Transfer Direction Specifies the transfer direction for the selected pipe. 0: Receiving direction 1: Sending direction When this bit has been set to 0, this module uses the selected pipe in the receiving direction, and when this bit has been set to 1, this module uses the selected pipe in the transmitting direction. Modify these bits when the value of CSSTS is 0, the PID bits are set to NAK, and no pipe is specified by the CURPIPE bits. To modify these bits after completing USB communication using the selected pipe, write 1 and then 0 to ACLRM continuously to clear the FIFO buffer assigned to the selected pipe while the CSSTS, PID, and CURPIPE bits are in the above-described state. Before modifying these bits after modifying the PID bits for the selected pipe from BUF to NAK, check that CSSTS and PBUSY are 0. However, if the PID bits have been modified to NAK by this module, checking PBUSY is not necessary.
3 to 0	EPNUM[3:0]	0000	R/W	Endpoint Number These bits specify the endpoint number for the selected pipe. Setting 0000 means unused pipe. Modify these bits while CSSTS is 0 and PID is NAK. Before modifying these bits after modifying the PID bits for the selected pipe from BUF to NAK, check that CSSTS and PBUSY are 0. However, if the PID bits have been modified to NAK by this module, checking PBUSY is not necessary. Do not make the settings such that the combination of the set values in the DIR and EPNUM bits should be the same for two or more pipes (EPNUM = 0000 can be set for all the pipes).

chanhvinh.com

29.3.33 Pipe Buffer Setting Register (PIPEBUF)

PIPEBUF is a register that specifies the buffer size and buffer number for PIPE1 to PIPE9.

This register is initialized by a power-on reset.

Bit:	15	14	13	12	11	10	9	8	7	6	5	4	3	2	1	0
	—	BUFSIZE[4:0]					—	—	—	BUFNMB[6:0]						
Initial value:	0	0	0	0	0	0	0	0	0	0	0	0	0	0	0	0
R/W:	R	R/W	R/W	R/W	R/W	R/W	R	R	R	R/W	R/W	R/W	R/W	R/W	R/W	R/W

Bit	Bit Name	Initial Value	R/W	Description
15	—	0	R	Reserved This bit is always read as 0. The write value should always be 0.

chanhvinh.com

Bit	Bit Name	Initial Value	R/W	Description
14 to 10	BUFSIZE[4:0]	H'00	R/W	Buffer Size Specifies the size of the buffer for the pipe selected by the PIPESEL bits (selected pipe) in terms of blocks, where one block comprises 64 bytes. 00000 (H'00): 64 bytes 00001 (H'01): 128 bytes : : 11111 (H'1F): 2 Kbytes When the DBLB bit has been set to 1, this module assigns two planes of the FIFO buffer size specified by the BUFSIZE bits to the selected pipe. Specifically, the following expression determines the FIFO buffer size assigned to the selected pipe by this module. (BUFSIZE + 1) × 64 × (DBLB + 1) [bytes] The valid value for these bits depends on the selected pipe. • PIPE1 to PIPE5: Any value from H'00 to H'1F is valid. • PIPE6 to PIPE9: H'00 should be set. When used with CNTMD = 1, set an integer multiple of the maximum packet size to the BUFSIZE bits. Modify these bits when the value of CSSTS is 0, the PID bits are set to NAK, and no pipe is specified by the CURPIPE bits. Before modifying these bits after modifying the PID bits for the selected pipe from BUF to NAK, check that CSSTS and PBUSY are 0. However, if the PID bits have been modified to NAK by this module, checking PBUSY is not necessary.
9 to 7	—	All 0	R	Reserved These bits are always read as 0. The write value should always be 0.

chanhvinh.com

Bit	Bit Name	Initial Value	R/W	Description
6 to 0	BUFNMB[6:0]	H'00	R/W	Buffer Number These bits specify the start block number of the FIFO buffers to be assigned to the selected pipe. The following blocks of FIFO buffers are assigned to the selected pipe. Block number BUFNMB to block number BUFNMB + (BUFSIZE + 1) × (DBLB + 1) - 1 Specify a value from H'04 to H'7F. When the selected pipe is one of PIPE1 to PIPE5, any value can be set to these bits according to the user system. BUFNUMB = H'00 to H'03 are used exclusively for DCP. BUFNMB = H'04 is used exclusively for PIPE6. When PIPE6 is not used, H'04 can be used for other pipes. When PIPE6 is selected, writing to these bits is invalid and H'04 is automatically assigned by this module. BUFNMB = H'05 is used exclusively for PIPE7. When PIPE7 is not used, H'05 can be used for other pipes. When PIPE7 is selected, writing to these bits is invalid and H'05 is automatically assigned by this module. BUFNUMB = H'06 is used exclusively for PIPE8. When PIPE8 is not used, H'06 can be used for other pipes. When PIPE8 is selected, writing to these bits is invalid and H'06 is automatically assigned by this module. BUFNUMB = H'07 is used exclusively for PIPE9. When PIPE9 is not used, H'07 can be used for other pipes. When PIPE9 is selected, writing to these bits is invalid and H'07 is automatically assigned by this module. Modify these bits when the value of CSSTS is 0, the PID bits are set to NAK, and no pipe is specified by the CURPIPE bits. Before modifying these bits after modifying the PID bits for the selected pipe from BUF to NAK, check that CSSTS and PBUSY are 0. However, if the PID bits have been modified to NAK by this module, checking PBUSY is not necessary.

chanhvinh.com

29.3.34 Pipe Maximum Packet Size Register (PIPEMAXP)

PIPEMAXP is a register that specifies the maximum packet size for PIPE1 to PIPE9.

This register is initialized by a power-on reset.

Bit:	15	14	13	12	11	10	9	8	7	6	5	4	3	2	1	0
	DEVSEL[3:0]				—	MXPS[10:0]										
Initial value:	0	0	0	0	0	*	*	*	*	*	*	*	*	*	*	*
R/W:	R/W	R/W	R/W	R/W	R	R/W	R/W	R/W	R/W	R/W	R/W	R/W	R/W	R/W	R/W	R/W

Bit	Bit Name	Initial Value	R/W	Description
15 to 12	DEVSEL[3:0]	0000	R/W	Device Select When the host controller function is selected, these bits specify the USB address of the communication target peripheral device. 0000: Address 0000 0001: Address 0001 0010: Address 0010 : : 1010: Address 1010 Other than above: Setting prohibited These bits should be set after setting the address to the DEVADDn register corresponding to the value to be set in these bits. For example, before setting DEVSEL to 0010, the address should be set to the DEVADD2 register. Before modifying these bits after modifying the PID bits for the selected pipe from BUF to NAK, check that CSSTS and PBUSY are 0. However, if the PID bits have been modified to NAK by this module, checking PBUSY is not necessary. When the function controller function is selected, these bits should be set to B'0000.
11	—	0	R	Reserved This bit is always read as 0. The write value should always be 0.

chanhvinh.com

Bit	Bit Name	Initial Value	R/W	Description
10 to 0	MXPS[10:0]	*	R/W	Maximum Packet Size Specifies the maximum data payload (maximum packet size) for the selected pipe. The valid value for these bits depends on the pipe as follows. PIPE1, PIPE2: 1 byte (H'001) to 1,024 bytes (H'400) PIPE3 to PIPE5: 8 bytes (H'008), 16 bytes (H'010), 32 bytes (H'020), 64 bytes (H'040), and 512 bytes (H'200) (Bits 2 to 0 are not provided.) PIPE6 to PIPE9: 1 byte (H'001) to 64 bytes (H'040) These bits should be set to the appropriate value for each transfer type based on the USB Specification. For split transactions using the isochronous pipe, these bits should be set to 188 bytes or less. Modify these bits when the value of CSSTS is 0, the PID bits are set to NAK, and no pipe is specified by the CURPIPE bits. Before modifying these bits after modifying the PID bits for the selected pipe from BUF to NAK, check that CSSTS and PBUSY are 0. However, if the PID bits have been modified to NAK by this module, checking PBUSY is not necessary. While MXPS is 0, do not write to the FIFO buffer or set PID to BUF.

Note: * The initial value of MXPS is H'000 when no pipe is selected with the PIPESEL bits in PIPESEL and H'040 when a pipe is selected with the PIPESEL bit in PIPESEL.

chanhvinh.com

29.3.35 Pipe Timing Control Register (PIPEPERI)

PIPEPERI is a register that selects whether the buffer is flushed or not when an interval error occurred during isochronous IN transfer, and sets the interval error detection interval for PIPE1 to PIPE9.

This register is initialized by a power-on reset.

Bit:	15	14	13	12	11	10	9	8	7	6	5	4	3	2	1	0
	—	—	—	IFIS	—	—	—	—	—	—	—	—	—	IITV[2:0]		
Initial value:	0	0	0	0	0	0	0	0	0	0	0	0	0	0	0	0
R/W:	R	R	R	R/W	R	R	R	R	R	R	R	R	R	R/W	R/W	R/W

Bit	Bit Name	Initial Value	R/W	Description
15 to 13	—	All 0	R	Reserved These bits are always read as 0. The write value should always be 0.
12	IFIS	0	R/W	Isochronous IN Buffer Flush Specifies whether to flush the buffer when the pipe selected by the PIPESEL bits (selected pipe) is used for isochronous IN transfers. 0: The buffer is not flushed. 1: The buffer is flushed. When the function controller function is selected and the selected pipe is for isochronous IN transfers, this module automatically clears the FIFO buffer when this module fails to receive the IN token from the USB host within the interval set by the IITV bits in terms of (μ) frames. In double buffer mode (DBLB = 1), this module only clears the data in the plane used earlier. This module clears the FIFO buffer on receiving the SOF packet immediately after the (μ) frame in which this module has expected to receive the IN token. Even if the SOF packet is corrupted, this module also clears the FIFO buffer at the right timing to receive the SOF packet by using the internal interpolation. When the host controller function is selected, set this bit to 0. When the selected pipe is not for the isochronous transfer, set this bit to 0.

chanhvinh.com

Bit	Bit Name	Initial Value	R/W	Description
11 to 3	—	All 0	R	Reserved These bits are always read as 0. The write value should always be 0.
2 to 0	IITV[2:0]	000	R/W	Interval Error Detection Interval Specifies the interval error detection timing for the selected pipe in terms of frames, which is expressed as n-th power of 2 (n is the value to be set). As described later, the detailed functions are different in host controller mode and in function controller mode. Modify these bits when the value of CSSTS is 0, the PID bits are set to NAK, and no pipe is specified by the CURPIPE bits. Before modifying these bits after modifying the PID bits for the selected pipe from BUF to NAK, check that CSSTS and PBUSY are 0. However, if the PID bits have been modified to NAK by this module, checking PBUSY is not necessary. Before modifying these bits after USB communication has been completed with these bits set to a certain value, set PID to NAK and then set ACLRM to 1 to initialize the interval timer. The IITV bits are invalid for PIPE3 to PIPE5; set these bits to 000 for these pipes.

chanhvinh.com

29.3.36 PIPEn Control Registers (PIPEnCTR) (n = 1 to 9)

PIPEnCTR is a register that is used to confirm the buffer memory status for the corresponding pipe, change and confirm the data PID sequence bit, determine whether auto response mode is set, determine whether auto buffer clear mode is set, and set a response PID for PIPE1 to PIPE9. This register can be set regardless of the pipe selection in PIPESEL.

This register is initialized by a power-on reset. PID[1:0] are initialized by a USB bus reset.

(1) PIPEnCTR (n = 1 to 5)

Bit:	15	14	13	12	11	10	9	8	7	6	5	4	3	2	1	0
	BSTS	INBUFM	CSCLR	CSSTS	—	AT REPM	ACLRM	SQCLR	SQSET	SQMON	PBUSY	—	—	—	PID[1:0]	
Initial value:	0	0	0	0	0	0	0	0	0	0	0	0	0	0	0	0
R/W:	R	R	R/W*	R	R	R/W	R/W	R/W*	R/W*	R	R	R	R	R	R/W	R/W

Bit	Bit Name	Initial Value	R/W	Description
15	BSTS	0	R	Buffer Status Indicates the FIFO buffer status for the pertinent pipe. 0: Buffer access is disabled. 1: Buffer access is enabled. The meaning of this bit depends on the settings of the DIR, BFRE, and DCLRM bits as shown in table 29.10.

chanhvinh.com

Bit	Bit Name	Initial Value	R/W	Description
14	INBUFM	0	R	IN Buffer Monitor Indicates the pertinent FIFO buffer status when the pertinent pipe is in the transmitting direction. 0: There is no data to be transmitted in the buffer memory. 1: There is data to be transmitted in the buffer memory. When the pertinent pipe is in the transmitting direction (DIR = 1), this module sets this bit to 1 when at least one FIFO buffer plane of data has been written. This module sets this bit to 0 when this module completes transmitting the data from the FIFO buffer plane to which all the data has been written. In double buffer mode (DBLB = 1), this module sets this bit to 0 when this module completes transmitting the data from the two FIFO buffer planes before one FIFO buffer plane of data has been written. This bit indicates the same value as the BSTS bit when the pertinent pipe is in the receiving direction (DIR = 0).

chanhvinh.com

Bit	Bit Name	Initial Value	R/W	Description
13	CSCLR	0	R/W*	C-SPLIT Status Clear Bit When the host controller function is selected, setting this bit to 1 allows this module to clear the CSSTS bit to 0. 0: Writing invalid 1: Clears the CSSTS bit to 0. For the transfer using the split transaction, to restart the next transfer with the S-SPLIT forcibly, set this bit to 1. However, for the normal split transaction, this module automatically clears the CSSTS bit to 0 upon completion of the C-SPLIT; therefore, clearing the CSSTS bit is not necessary. Controlling the CSSTS bit through this bit must be done while UACT is 0 and thus communication is halted or while no transfer is being performed with bus disconnection detected. Setting this bit to 1 while CSSTS is 0 has no effect. When the function controller function is selected, be sure to write 0 to this bit.
12	CSSTS	0	R	CSSTS Status Bit Indicates the C-SPLIT status of the split transaction when the host controller function is selected. 0: START-SPLIT (S-SPLIT) transaction being processed or the transfer not using the split transaction in progress 1: C-SPLIT transaction being processed This module sets this bit to 1 upon start of the C-SPLIT and clears this bit to 0 upon detection of C-SPLIT completion. If the USB device is detached when processing of a C-SPLIT transaction is in progress, the CSSTS bit may remain set to 1. In such a case (DTCH = 1 detected), use the CSCLR bit to clear the CSSTS bit to 0. Indicates the valid value only when the host controller function is selected.
11	—	0	R	Reserved This bit is always read as 0. The write value should always be 0.

chanhvinh.com

Bit	Bit Name	Initial Value	R/W	Description
10	ATREPM	0	R/W	Auto Response Mode Enables or disables auto response mode for the pertinent pipe. 0: Auto response disabled 1: Auto response enabled When the function controller function is selected and the pertinent pipe is for bulk transfer, this bit can be set to 1. When this bit is set to 1, this module responds to the token from the USB host as described below. (1) When the pertinent pipe is for bulk IN transfer (TYPE = 01 and DIR = 1) When ATREPM = 1 and PID = BUF, this module transmits a zero-length packet in response to the IN token. This module updates (allows toggling of) the sequence toggle bit (DATA-PID) each time this module receives the ACK from the USB host (in a single transaction, IN token is received, zero-length packet is transmitted, and then ACK is received.). In this case, this module does not generate the BRDY or BEMP interrupt. (2) When the pertinent pipe is for bulk OUT transfer (TYPE = 01 and DIR = 0) When ATREPM = 1 and PID = BUF, this module returns NAK in response to the OUT (or PING) token and generates the NRDY interrupt. Modify this bit while CSSTS is 0 and PID is NAK. Before modifying this bit after modifying the PID bits for the corresponding pipe from BUF to NAK, check that CSSTS and PBUSY are 0. However, if the PID bits have been modified to NAK by this module, checking PBUSY is not necessary.

chanhvinh.com

Bit	Bit Name	Initial Value	R/W	Description
10	ATREPM	0	R/W	For USB communication in auto response mode, set this bit to 1 while the FIFO buffer is empty. Do not write to the FIFO buffer during USB communication in auto response mode. When the pertinent pipe is for isochronous transfer, be sure to set this bit to 0. When the host controller function is selected, set this bit to 0.
9	ACLRM	0	R/W	Auto Buffer Clear Mode Enables or disables automatic buffer clear mode for the pertinent pipe. 0: Disabled 1: Enabled (all buffers are initialized) To delete all the information assigned to the pertinent pipe from the FIFO buffer, write 1 and 0 in succession to the ACLRM bit. Table 29.11 (1) lists the information related to the USB 2.0 host/function module that is cleared by setting the ACLRM bit to 1 and then to 0 in succession. Table 29.11 (2) lists the cases in which it is necessary to do this. Modify this bit while CSSTS is 0, PID is NAK, and the pertinent pipe is not specified in the CURPIPE bits. Before modifying this bit after modifying the PID bits for the corresponding pipe from BUF to NAK, check that CSSTS and PBUSY are 0. However, if the PID bits have been modified to NAK by this module, checking PBUSY is not necessary.

chanhvinh.com

Bit	Bit Name	Initial Value	R/W	Description
8	SQCLR	0	R/W*	Toggle Bit Clear This bit should be set to 1 to clear the expected value (to set DATA0 as the expected value) of the sequence toggle bit for the next transaction of the pertinent pipe. 0: Invalid 1: Specifies DATA0. Setting this bit to 1 allows this module to set DATA0 as the expected value of the sequence toggle bit of the pertinent pipe. This module always sets this bit to 0. When the host controller function is selected, setting this bit to 1 for the pipe for bulk OUT transfer, this module starts the next transfer of the pertinent pipe with the PING token. Set the SQCLR bit to 1 while CSSTS is 0 and PID is NAK. Before modifying this bit after modifying the PID bits for the corresponding pipe from BUF to NAK, check that CSSTS and PBUSY are 0. However, if the PID bits have been modified to NAK by this module, checking PBUSY is not necessary.

chanhvinh.com

Bit	Bit Name	Initial Value	R/W	Description
7	SQSET	0	R/W*	Toggle Bit Set This bit should be set to 1 to set DATA1 as the expected value of the sequence toggle bit for the next transaction of the pertinent pipe. 0: Invalid 1: Specifies DATA1. Setting this bit to 1 allows this module to set DATA1 as the expected value of the sequence toggle bit of the pertinent pipe. This module always sets this bit to 0. Set the SQSET bit to 1 while CSSTS is 0 and PID is NAK. Before modifying this bit after modifying the PID bits for the corresponding pipe from BUF to NAK, check that CSSTS and PBUSY are 0. However, if the PID bits have been modified to NAK by this module, checking PBUSY is not necessary.
6	SQMON	0	R	Toggle Bit Confirmation Indicates the expected value of the sequence toggle bit for the next transaction of the pertinent pipe. 0: DATA0 1: DATA1 When the pertinent pipe is not for the isochronous transfer, this module allows this bit to toggle upon normal completion of the transaction. However, this bit is not allowed to toggle when a DATA-PID disagreement occurs during the receiving transfer.

chanhvinh.com

Bit	Bit Name	Initial Value	R/W	Description
5	PBUSY	0	R	Pipe Busy This bit indicates whether the relevant pipe is used or not for the transaction. 0: The relevant pipe is not used for the transaction. 1: The relevant pipe is used for the transaction. The USB 2.0 host/function module switches the PBUSY bit from 0 to 1 when a USB transaction using the pertinent pipe starts. It clears the PBUSY bit from 1 to 0 when one transaction completes successfully. Reading this bit after PID has been set to NAK allows checking that modification of the pipe settings is possible. For details, refer to section 29.4.3 (1), Pipe Control Register Switching Procedures.
4 to 2	—	All 0	R	Reserved These bits are always read as 0. The write value should always be 0.

chanhvinh.com

Bit	Bit Name	Initial Value	R/W	Description
1, 0	PID[1:0]	00	R/W	Response PID Specifies the response type for the next transaction of the pertinent pipe. 00: NAK response 01: BUF response (depending on the buffer state) 10: STALL response 11: STALL response The default setting of these bits is NAK. Modify the setting to BUF to use the pertinent pipe for USB transfer. Tables 29.12 and 29.13 show the basic operation (operation when there are no errors in the transmitted and received packets) of this module depending on the PID bit setting. After modifying the setting of these bits from BUF to NAK during USB communication using the pertinent pipe, check that PBUSY is 0 to see if USB communication using the pertinent pipe has actually entered the NAK state. However, if the PID bits have been modified to NAK by this module, checking PBUSY is not necessary. After S-SPLIT is issued (CSSTS = 1) for split transaction in the pertinent pipe, the transaction continues until C-SPLIT is completed even when the PID bits are set to NAK. This module modifies the setting of these bits as follows. • This module sets PID to NAK on recognizing the completion of the transfer when the pertinent pipe is in the receiving direction and the SHTNAK bit for the selected pipe has been set to 1. • This module sets PID to STALL (11) on receiving the data packet with the payload exceeding the maximum packet size of the pertinent pipe. • This module sets PID to NAK on detecting a USB bus reset when the function controller function is selected.

chanhvinh.com

Bit	Bit Name	Initial Value	R/W	Description
1, 0	PID[1:0]	00	R/W	• This module sets PID to NAK on detecting a receive error such as a CRC error three consecutive times when the host controller function is selected. • This module sets PID to STALL (11) on receiving the STALL handshake when the host controller function is selected. To specify each response type, set these bits as follows. • To make a transition from NAK (00) to STALL, set 10. • To make a transition from BUF (01) to STALL, set 11. • To make a transition from STALL (11) to NAK, set 10 and then 00. • To make a transition from STALL to BUF, set 00 (NAK) and then 01 (BUF).

Note: * Only 0 can be read and 1 can be written.

chanhvinh.com

Table 29.10 Meaning of BSTS Bit

DIR Bit	BFRE Bit	DCLRM Bit	Meaning of BSTS Bit
0	0	0	1: The received data can be read from the FIFO buffer. 0: The received data has been completely read from the FIFO buffer.
		1	Setting prohibited
	1	0	1: The received data can be read from the FIFO buffer. 0: BCLR has been set to 1 after the received data has been completely read from the FIFO buffer.
		1	1: The received data can be read from the FIFO buffer. 0: The received data has been completely read from the FIFO buffer.
1	0	0	1: The transmit data can be written to the FIFO buffer. 0: The transmit data has been completely written to the FIFO buffer.
		1	Setting prohibited
	1	0	Setting prohibited
		1	Setting prohibited

Table 29.11(1) Information Cleared by this Module by Setting ACLRM = 1

No.	Information Cleared by ACLRM Bit Manipulation
1	All the information in the FIFO buffer assigned to the pertinent pipe (all the information in two FIFO buffer planes in double buffer mode)
2	The interval count value when the pertinent pipe is for isochronous transfer

Table 29.11(2) Cases That Require Setting ACLRM to 1

No.	Cases in which Clearing the Information is Necessary
1	When it is necessary to clear all the information assigned to the pertinent pipe from the FIFO buffer
2	When the interval count value is to be reset
3	When the BFRE setting is modified
4	When the DBLB setting is modified
5	When the transaction count function is forcibly terminated

chanhvinh.com

Table 29.12 Operation of This Module depending on PID Setting (when Host Controller Function is Selected)

PID	Transfer Type	Transfer Direction (DIR Bit)	Operation of This Module
00 (NAK)	Operation does not depend on the setting.	Operation does not depend on the setting.	Does not issue tokens.
01 (BUF)	Bulk or interrupt	Operation does not depend on the setting.	Issues tokens while UACT is 1 and the FIFO buffer corresponding to the pertinent pipe is ready for transmission and reception. Does not issue tokens while UACT is 0 or the FIFO buffer corresponding to the pertinent pipe is not ready for transmission or reception.
	Isochronous	Operation does not depend on the setting.	Issues tokens irrespective of the status of the FIFO buffer corresponding to the pertinent pipe.
10 (STALL) or 11 (STALL)	Operation does not depend on the setting.	Operation does not depend on the setting.	Does not issue tokens.

chanhvinh.com

Table 29.13 Operation of This Module depending on PID Setting (when Function Controller Function is Selected)

PID	Transfer Type	Transfer Direction (DIR Bit)	Operation of This Module
00 (NAK)	Bulk or interrupt	Operation does not depend on the setting.	Returns NAK in response to the token from the USB host. For the operation when ATREPM is 1, refer to the description of the ATREPM bit.
	Isochronous	Receiving direction (DIR = 0)	Returns nothing in response to a token from the USB host.
		Transmitting direction (DIR = 1)	Returns a zero-length packet in response to a token from the USB host.
01 (BUF)	Bulk	Receiving direction (DIR = 0)	Receives data and returns ACK in response to the OUT token from the USB host if the FIFO buffer corresponding to the pertinent pipe is ready for reception. Returns NAK if not ready. Returns ACK in response to the PING token from the USB host if the FIFO buffer corresponding to the pertinent pipe is ready for reception. Returns NYET if not ready.
	Interrupt	Receiving direction (DIR = 0)	Receives data and returns ACK in response to the OUT token from the USB host if the FIFO buffer corresponding to the pertinent pipe is ready for reception. Returns NAK if not ready.
	Bulk or interrupt	Transmitting direction (DIR = 1)	Transmits data in response to the token from the USB host if the corresponding FIFO buffer is ready for transmission. Returns NAK if not ready.
	Isochronous	Receiving direction (DIR = 0)	Receives data in response to the OUT token from the USB host if the FIFO buffer corresponding to the pertinent pipe is ready for reception. Discards data if not ready.

chanhvinh.com

PID	Transfer Type	Transfer Direction (DIR Bit)	Operation of This Module
01 (BUF)	Isochronous	Transmitting direction (DIR = 1)	Transmits data in response to the token from the USB host if the corresponding FIFO buffer is ready for transmission. Transmits the zero-length packet if not ready.
10 (STALL) or 11 (STALL)	Bulk or interrupt	Operation does not depend on the setting.	Returns STALL in response to the token from the USB host.
	Isochronous	Operation does not depend on the setting	Returns nothing in response to the token from the USB host.

(2) PIPEnCTR (n = 6 to 9)

Bit:	15	14	13	12	11	10	9	8	7	6	5	4	3	2	1	0
	BSTS	—	CSCLR	CSSTS	—	—	ACLRM	SQCLR	SQSET	SQMON	PBUSY	—	—	—	PID[1:0]	
Initial value:	0	0	0	0	0	0	0	0	0	0	0	0	0	0	0	0
R/W:	R	R	R/W*	R/W	R	R	R/W	R/W*	R/W*	R	R	R	R	R	R/W	R/W

Bit	Bit Name	Initial Value	R/W	Description
15	BSTS	0	R	Buffer Status Indicates the FIFO buffer status for the pertinent pipe. 0: Buffer access is disabled. 1: Buffer access is enabled. The meaning of this bit depends on the settings of the DIR, BFRE, and DCLRM bits as shown in table 29.10.
14	—	0	R	Reserved This bit is always read as 0. The write value should always be 0.

chanhvinh.com

Bit	Bit Name	Initial Value	R/W	Description
13	CSCLR	0	R/W*	C-SPLIT Status Clear Bit Setting this bit to 1 allows this module to clear the CSSTS bit of the pertinent pipe to 0. 0: Writing invalid 1: Clears the CSSTS bit to 0. For the transfer using the split transaction, to restart the next transfer with the S-SPLIT forcibly, set this bit to 1. However, for the normal split transaction, this module automatically clears the CSSTS bit to 0 upon completion of the C-SPLIT; therefore, clearing the CSSTS bit is not necessary. Controlling the CSSTS bit through this bit must be done while UACT is 0 thus communication is halted or while no transfer is being performed with bus disconnection detected. Setting this bit to 1 while CSSTS is 0 has no effect. When the function controller function is selected, be sure to write 0 to this bit.
12	CSSTS	0	R/W	CSSTS Status Bit Indicates the C-SPLIT status of the split transaction when the host controller function is selected. 0: START-SPLIT (S-SPLIT) transaction being processed or the transfer not using the split transaction in progress 1: C-SPLIT transaction being processed This module sets this bit to 1 upon start of the C-SPLIT and clears this bit to 0 upon detection of C-SPLIT completion. Indicates the valid value only when the host controller function is selected.
11, 10	—	All 0	R	Reserved These bits are always read as 0. The write value should always be 0.

chanhvinh.com

Bit	Bit Name	Initial Value	R/W	Description
9	ACLRM	0	R/W	Auto Buffer Clear Mode Enables or disables automatic buffer clear mode for the pertinent pipe. 0: Disabled 1: Enabled (all buffers are initialized) To delete all the information assigned to the pertinent pipe from the FIFO buffer, write 1 and 0 in succession to the ACLRM bit. Table 29.14 (1) lists the information related to the USB 2.0 host/function module that is cleared by setting the ACLRM bit to 1 and then to 0 in succession. Table 29.14 (2) lists the cases in which it is necessary to do this. Modify this bit while CSSTS is 0 and PID is NAK and before the pipe is selected by the CURPIPE bits. Before modifying this bit after modifying the PID bits for the corresponding pipe from BUF to NAK, check that CSSTS and PBUSY are 0. However, if the PID bits have been modified to NAK by this module, checking PBUSY is not necessary.

chanhvinh.com

Bit	Bit Name	Initial Value	R/W	Description
8	SQCLR	0	R/W*	Toggle Bit Clear This bit should be set to 1 to clear the expected value (to set DATA0 as the expected value) of the sequence toggle bit for the next transaction of the pertinent pipe. 0: Invalid 1: Specifies DATA0. Setting this bit to 1 allows this module to set DATA0 as the expected value of the sequence toggle bit of the pertinent pipe. This module always sets this bit to 0. When the host controller function is selected, setting this bit to 1 for the pipe for bulk OUT transfer, this module starts the next transfer of the pertinent pipe with the PING token. Set the SQCLR bit to 1 while CSSTS is 0 and PID is NAK. Before modifying this bit after modifying the PID bits for the corresponding pipe from BUF to NAK, check that CSSTS and PBUSY are 0. However, if the PID bits have been modified to NAK by this module, checking PBUSY is not necessary.

chanhvinh.com

Bit	Bit Name	Initial Value	R/W	Description
7	SQSET	0	R/W*	Toggle Bit Set This bit should be set to 1 to set DATA1 as the expected value of the sequence toggle bit for the next transaction of the pertinent pipe. 0: Invalid 1: Specifies DATA1. Setting this bit to 1 allows this module to set DATA1 as the expected value of the sequence toggle bit of the pertinent pipe. This module always sets this bit to 0. Set the SQSET bit to 1 while CSSTS is 0 and PID is NAK. Before modifying this bit after modifying the PID bits for the corresponding pipe from BUF to NAK, check that CSSTS and PBUSY are 0. However, if the PID bits have been modified to NAK by this module, checking PBUSY is not necessary.
6	SQMON	0	R	Toggle Bit Confirmation Indicates the expected value of the sequence toggle bit for the next transaction of the pertinent pipe. 0: DATA0 1: DATA1 When the pertinent pipe is not for the isochronous transfer, this module allows this bit to toggle upon normal completion of the transaction. However, this bit is not allowed to toggle when a DATA-PID disagreement occurs during the receiving transfer.

chanhvinh.com

Bit	Bit Name	Initial Value	R/W	Description
5	PBUSY	0	R	Pipe Busy This bit indicates whether the relevant pipe is used or not for the transaction. 0: The relevant pipe is not used for the transaction. 1: The relevant pipe is used for the transaction. This module modifies this bit from 0 to 1 upon start of the USB transaction for the pertinent pipe, and clears it from 1 to 0 when one transaction completes successfully. Reading this bit after PID has been set to NAK allows checking that modification of the pipe settings is possible. For details, refer to section 29.4.3 (1), Pipe Control Register Switching Procedures.
4 to 2	—	All 0	R	Reserved These bits are always read as 0. The write value should always be 0.

chanhvinh.com

Bit	Bit Name	Initial Value	R/W	Description
1, 0	PID[1:0]	00	R/W	Response PID Specifies the response type for the next transaction of the pertinent pipe. 00: NAK response 01: BUF response (depending on the buffer state) 10: STALL response 11: STALL response The default setting of these bits is NAK. Modify the setting to BUF to use the pertinent pipe for USB transfer. Tables 29.12 and 29.13 show the basic operation (operation when there are no errors in the transmitted and received packets) of this module depending on the PID bit setting. After modifying the setting of these bits from BUF to NAK during USB communication using the pertinent pipe, check that PBUSY is 0 to see if USB communication using the pertinent pipe has actually entered the NAK state. However, if the PID bits have been modified to NAK by this module, checking PBUSY is not necessary. After S-SPLIT is issued (CSSTS = 1) for split transaction in the pertinent pipe, the transaction continues until C-SPLIT is completed even when the PID bits are set to NAK. This module modifies the setting of these bits as follows. • This module sets PID to NAK on recognizing the completion of the transfer when the pertinent pipe is in the receiving direction and the SHTNAK bit for the selected pipe has been set to 1. • This module sets PID to STALL (11) on receiving the data packet with the payload exceeding the maximum packet size of the pertinent pipe. • This module sets PID to NAK on detecting a USB bus reset when the function controller function is selected.

chanhvinh.com

Bit	Bit Name	Initial Value	R/W	Description
1, 0	PID[1:0]	00	R/W	• This module sets PID to NAK on detecting a receive error such as a CRC error three consecutive times when the host controller function is selected. • This module sets PID to STALL (11) on receiving the STALL handshake when the host controller function is selected. To specify each response type, set these bits as follows. • To make a transition from NAK (00) to STALL, set 10. • To make a transition from BUF (01) to STALL, set 11. • To make a transition from STALL (11) to NAK, set 10 and then 00. • To make a transition from STALL to BUF, set 00 (NAK) and then 01 (BUF).

Note: * Only 0 can be read and 1 can be written.

chanhvinh.com

Table 29.14 (1) Information Cleared by this Module by Setting ACLRM = 1

No.	Information Cleared by ACLRM Bit Manipulation
1	All the information in the FIFO buffer assigned to the pertinent pipe
2	When the host controller function is selected, the interval count value when the pertinent pipe is for isochronous transfer

Table 29.14 (2) Cases That Require Setting ACLRM to 1

No.	Cases in which Clearing the Information is Necessary
1	When it is necessary to clear all the information assigned to the pertinent pipe from the FIFO buffer
2	When the interval count value is to be reset
3	When the BFRE setting is modified
4	When the transaction count function is forcibly terminated

29.3.37 PIPEn Transaction Counter Enable Registers (PIPEnTRE) (n = 1 to 5)

PIPEnTRE is a register that enables or disables the transaction counter corresponding to PIPE1 to PIPE5, and clears the transaction counter.

This register is initialized by a power-on reset.

Bit:	15	14	13	12	11	10	9	8	7	6	5	4	3	2	1	0
	—	—	—	—	—	—	TRENB	TRCLR	—	—	—	—	—	—	—	—
Initial value:	0	0	0	0	0	0	0	0	0	0	0	0	0	0	0	0
R/W:	R	R	R	R	R	R	R/W	R/W*1	R	R	R	R	R	R	R	R

Bit	Bit Name	Initial Value	R/W	Description
15 to 10	—	All 0	R	Reserved These bits are always read as 0. The write value should always be 0.

chanhvinh.com

Bit	Bit Name	Initial Value	R/W	Description
9	TRENB	0	R/W	Transaction Counter Enable Enables or disables the transaction counter. 0: The transaction counter is disabled. 1: The transaction counter is enabled. For the pipe in the receiving direction, setting this bit to 1 after setting the total number of the packets to be received in the TRNCNT bits allows this module to control hardware as described below on having received the number of packets equal to the set value in the TRNCNT bits. • In continuous transmission/reception mode (CNTMD = 1), this module switches the FIFO buffer to the CPU side even if the FIFO buffer is not full on completion of reception. • While SHTNAK is 1, this module modifies the PID bits to NAK for the corresponding pipe on having received the number of packets equal to the set value in the TRNCNT bits. • While BFRE is 1, this module asserts the BRDY interrupt on having received the number of packets equal to the set value in the TRNCNT bits and then reading out the last received data. For the pipe in the transmitting direction, set this bit to 0. When the transaction counter is not used, set this bit to 0. When the transaction counter is used, set the TRNCNT bits before setting this bit to 1. Set this bit to 1 before receiving the first packet to be counted by the transaction counter.
8	TRCLR	0	R/W*[1]	Transaction Counter Clear Clears the current value of the transaction counter corresponding to the pertinent pipe and then sets this bit to 0. 0: Invalid 1: The current counter value is cleared.

chanhvinh.com

Bit	Bit Name	Initial Value	R/W	Description
7 to 0	—	All 0	R	Reserved These bits are always read as 0. The write value should always be 0.

Notes: 1. Only 0 can be read and 1 can be written.
2. Modify each bit in this register while CSSTS is 0 and PID is NAK. Before modifying each bit after modifying the PID bits for the corresponding pipe from BUF to NAK, check that CSSTS and PBUSY are 0. However, if the PID bits have been modified to NAK by this module, checking PBUSY is not necessary.

29.3.38 PIPEn Transaction Counter Registers (PIPEnTRN) (n = 1 to 5)

PIPEnTRN is a transaction counter corresponding to PIPE1 to PIPE5.

This register is initialized by a power-on reset, but retains the set value by a USB bus reset.

Bit:	15	14	13	12	11	10	9	8	7	6	5	4	3	2	1	0
	TRNCNT[15:0]															
Initial value:	0	0	0	0	0	0	0	0	0	0	0	0	0	0	0	0
R/W:	R/W	R/W	R/W	R/W	R/W	R/W	R/W	R/W	R/W	R/W	R/W	R/W	R/W	R/W	R/W	R/W

Bit	Bit Name	Initial Value	R/W	Description
15 to 0	TRNCNT[15:0]	All 0	R/W	Transaction Counter When written to: Specifies the number of transactions to be transferred through DMA. When read from: Indicates the specified number of transactions if TRENB is 0. Indicates the number of currently counted transaction if TRENB is 1.

chanhvinh.com

Bit	Bit Name	Initial Value	R/W	Description
15 to 0	TRNCNT[15:0]	All 0	R/W	This module increments the value of these bits by one when all of the following conditions are satisfied on receiving the packet. • TRENB is 1. • (TRNCNT set value ≠ current counter value + 1) on receiving the packet. • The payload of the received packet agrees with the set value in the MXPS bits. This module clears the value of these bits to 0 when any of the following conditions are satisfied. • All the following conditions are satisfied. TRENB is 1. (TRNCNT set value = current counter value + 1) on receiving the packet. The payload of the received packet agrees with the set value in the MXPS bits. • All the following conditions are satisfied. TRENB is 1. This module has received a short packet. • The following condition is satisfied. The TRCLR bit has been set to 1. For the pipe in the transmitting direction, set these bits to 0. When the transaction counter is not used, set these bits to 0. Modify these bits while CSSTS is 0, PID is NAK, and TRENB is 0. Before modifying these bits after modifying the PID bits for the corresponding pipe from BUF to NAK, check that CSSTS and PBUSY are 0. However, if the PID bits have been modified to NAK by this module, checking PBUSY is not necessary. To modify the value of these bits, set TRNCNT to 1 before setting TRENB to 1.

chanhvinh.com

29.3.39 Device Address n Configuration Registers (DEVADDn) (n = 0 to A)

DEVADDn is a register that specifies the address and port number of the hub to which the communication target peripheral device is connected and that also specifies the transfer speed of the peripheral device for PIPE0 to PIPEA.

When the host controller function is selected, this register should be set before starting communication using each pipe.

The bits in this register should be modified while no valid pipes are using the settings of this register. Valid pipes refer to the ones satisfying both of condition 1 and 2 below.

1. This register is selected by the DEVSEL bits as the communication target.
2. The PID bits are set to BUF for the selected pipe or the selected pipe is the DCP with SUREQ being 1.

This register is initialized by a power-on reset.

Bit:	15	14	13	12	11	10	9	8	7	6	5	4	3	2	1	0
	—	UPPHUB[3:0]				HUBPORT[2:0]			USBSPD[1:0]		—	—	—	—	—	—
Initial value:	0	0	0	0	0	0	0	0	0	0	0	0	0	0	0	0
R/W:	R	R/W	R/W	R/W	R/W	R/W	R/W	R/W	R/W	R/W	R	R	R	R	R	R

Bit	Bit Name	Initial Value	R/W	Description
15	—	0	R	Reserved This bit is always read as 0. The write value should always be 0.

chanhvinh.com

Bit	Bit Name	Initial Value	R/W	Description
14 to 11	UPPHUB[3:0]	0000	R/W	Address of Hub to which Communication Target is Connected Specifies the USB address of the hub to which the communication target peripheral device is connected. 0000: The peripheral device is directly connected to the port of this LSI. 0001 to 1010: USB address of the hub 1011 to 1111: Setting prohibited When the host controller function is selected, this module refers to the setting of these bits to generate packets for split transactions. When the function controller function is selected, set these bits to 0000.
10 to 8	HUBPORT[2:0]	000	R/W	Port Number of Hub to which Communication Target is Connected Specifies the port number of the hub to which the communication target peripheral device is connected. 000: The peripheral device is directly connected to the port of this LSI. 001 to 111: Port number of the hub When the host controller function is selected, this module refers to the setting of these bits to generate packets for split transactions. When the function controller function is selected, set these bits to 000.

chanhvinh.com

Bit	Bit Name	Initial Value	R/W	Description
7, 6	USBSPD[1:0]	00	R/W	Transfer Speed of the Communication Target Device Specifies the USB transfer speed of the communication target peripheral device. 00: DEVADDn is not used. 01: Low speed 10: Full speed 11: High speed When the host controller function is selected, this module refers to the setting of these bits to generate packets. When the function controller function is selected, set these bits to 00.
5 to 0	—	All 0	R	Reserved These bits are always read as 0. The write value should always be 0.

chanhvinh.com

29.4 Operation

29.4.1 System Control and Oscillation Control

This section describes the register operations that are necessary to the initial settings of this module, and the registers necessary for power consumption control.

(1) Resets

Table 29.15 lists the types of controller resets. For the initialized states of the registers following the reset operations, see section 29.3, Register Description.

Table 29.15 Types of Reset

Name	Operation
Power-on reset	Low level input from the $\overline{\text{RES}}$ pin
USB bus reset	Automatically detected by this module from the D+ and D− lines when the function controller function is selected

(2) Controller Function Selection

This module can select the host controller function or function controller function using the DCFM bit in SYSCFG. Changing the DCFM bit should be done in the initial settings immediately after a power-on reset or in the D+ pull-up disabled (DPRPU = 0) and D + /D − pull-down disabled (DRPD = 0) state.

(3) Enabling High-Speed Operation

This module can select a USB communication speed (communication bit rate). When the host controller function is selected, the high-speed operation or full-speed/low-speed operation can be set. When the function controller function is selected, either the high-speed operation or full-speed operation can be selected. In order to enable the high-speed operation for this module, the HSE bit in SYSCFG should be set to 1. If high-speed mode has been enabled, this module executes the reset handshake protocol, and the USB communication speed is set automatically. The results of the reset handshake can be confirmed using the RHST bit in DVSTCTR.

If high-speed operation has been disabled, this module operates at full-speed or low-speed. If the function controller function is also selected, this module operates at full-speed.

Changing the HSE bit should be done between the ATTCH interrupt detection and bus reset execution when the host controller function is selected, or with the D+ line pull-up disabled (DPRPU = 0) when the host controller function is selected.

chanhvinh.com

(4) USB Data Bus Resistor Control

Figure 29.1 shows a diagram of the connections between this module and the USB connectors.

This module incorporates a pull-up resistor for the D+ signal and a pull-down resistor for the D+ and D- signals. These signals can be pulled up or down using the DPRPU and DRPD bits in SYSCFG.

This module controls the terminal resistor for the D+ and D- signals during high-speed operation and the output resistor for the signals during full-speed operation. This module automatically switches the resistor after connection with the host controller or peripheral device by means of reset handshake, suspended state and resume detection.

When the function controller function is selected and the DPRPU bit in SYSCFG is cleared to 0 during communication with the host controller, the pull-up resistor (or the terminal resistor) of the USB data line is disabled, making it possible to notify the USB host of the device disconnection.

chanhvinh.com

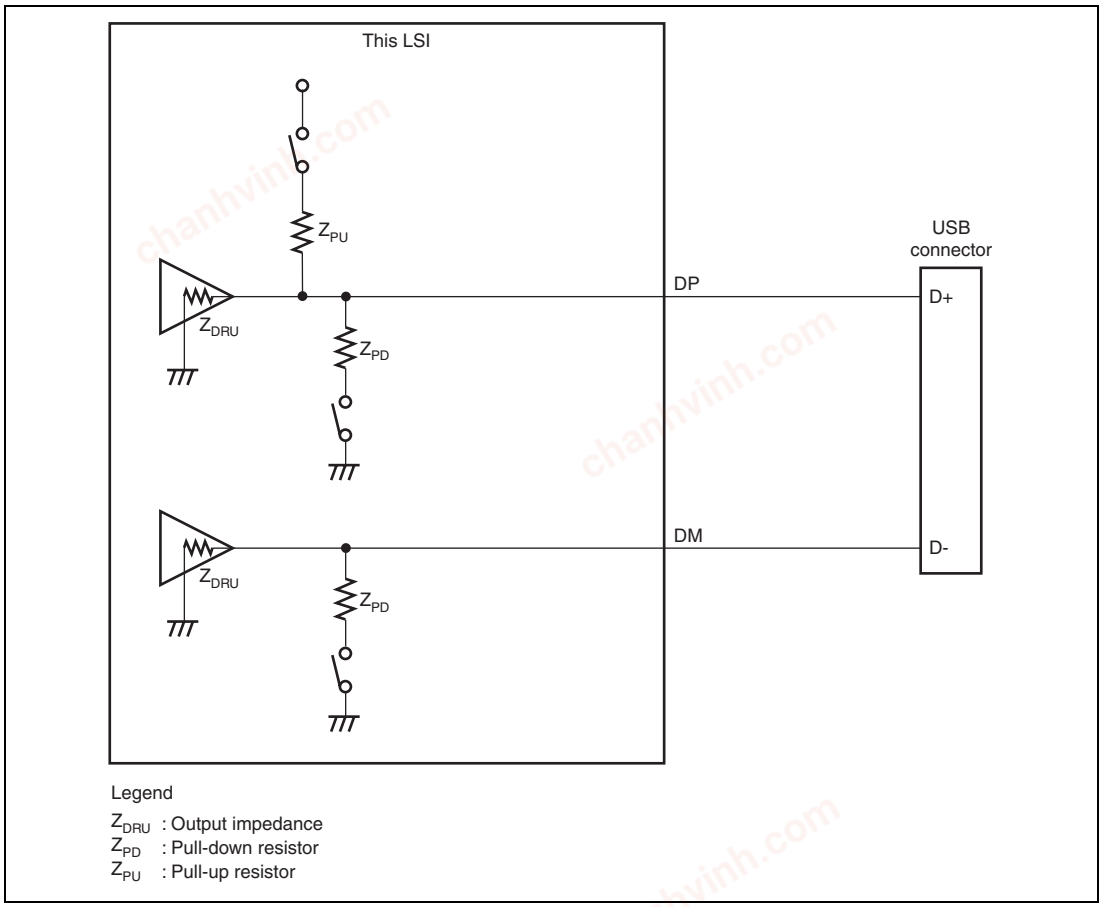

Figure 29.1 UBS Connector Connection

chanhvinh.com

(5) Register Access Wait Control

There is a restriction on the cycle time for accessing the registers of this module except for SYSSTS as given below.

Wait-related restriction: The cycle time for successive accesses to the USB 2.0 host/function module must be a duration of at least four USB clock (48 MHz) cycles (83.33 ns). To fulfill the above restriction, a register access wait control is necessary using the BWAIT[3:0] bits in BUSWAIT. The initial value is the maximum value (access cycles = 17 clock cycles). The optimum value should be found and set.

Setting example 1: When successively accessing the registers of this module

Peripheral clock 1 frequency: 66.67 MHz

Calculation: (2 cycles (access cycles for the registers of this module) + 1 cycle (interval between successive accesses) + BWAIT) × 1/66.67 MHz ≥ 83.33 ns

BWAIT = 3

Setting example 2: When sending data from the on-chip high-speed RAM to the FIFO port register through DMA transfer

Peripheral clock 1 frequency: 66.67 MHz

Calculation: (2 cycles (access cycles for the registers of this module) + 2 cycles (access cycles for the on-chip high-speed RAM) + BWAIT) × 1/66.67 MHz ≥ 83.33 ns

BWAIT = 2

(6) Input Clock Selection

The UCKPSEL and UCKFSEL bits in SYSCFG can be used to select the input pin from USB_X1 or EXTAL and the input clock frequency from 48 MHz or 12 MHz for this module. Stop supply of the clock signal to the USB module (SCKE = 0) when the UCKPSEL and UCKFSEL bits are to be modified.

(7) Settings for Clock Supply to the USB Module

The method of setting to select the clock signal for supply to the USB module depends on the input clock frequency.

chanhvinh.com

(a) Selecting the 48-MHz Clock Input

Select the 48-MHz and USB_X1 input by setting the UCKFSEL and UCKPSEL bits in SYSCFG to 0, then set the SCKE bit to enable supply of the clock signal. The 48-MHz input can only be selected when the clock input pin USB_X1 has been set.

(b) Selecting the 12-MHz Clock Input

Set the UCKFSEL bit in SYSCFG to 1 and select the clock input pin by the UCKPSEL bit, then make settings for supply of the clock signal according to the following procedure.

Setting example 1: When supply of the clock signal is enabled in the initial settings immediately after a power-on reset.

l. Set the UPLLE bit to 1.
2. Wait for 1 ms.
3. Set the SCKE bit to 1.

Setting example 2: When supply of the clock signal is stopped in the suspended state.

1. Set the SCKE bit to 0.
2. Set the UPLLE bit to 0.

Setting example 3: When supplying the clock signal is enabled through recovery from the suspended state

1. Set the UPLLE bit to 1.
2. Wait for 1 ms.
3. Set the SCKE bit to 1.

Note: If a USB reset is used for recovery from the suspended state when operation as a function controller and high-speed transfer is selected, set the SCKE bit to 1 in no more than 2.5 ms.

chanhvinh.com

29.4.2 Interrupt Functions

Table 29.16 lists the interrupt generation conditions for this module.

When an interrupt generation condition is satisfied and the interrupt output is enabled using the corresponding interrupt enable register, this module issues a USB interrupt request to the interrupt controller.

Table 29.16 Interrupt Generation Conditions

Bit	Interrupt Name	Cause of Interrupt	Function That Generates the Interrupt	Related Status
VBINT	VBUS interrupt	When a change in the state of the VBUS input pin has been detected (low to high or high to low)	Host, function	VBSTS
RESM	Resume interrupt	When a change in the state of the USB bus has been detected in the suspended state (J-state to K-state or J-state to SE0)	Function	—
SOFR	Frame number update interrupt	When the host controller function is selected: • When an SOF packet with a different frame number has been transmitted When the function controller function is selected: • When an SOF packet with a different frame number is received	Host, function	—
DVST	Device state transition interrupt	When a device state transition is detected • A USB bus reset detected • The suspend state detected • SET_ADDRESS request received • SET_CONFIGURATION request received	Function	DVSQ

chanhvinh.com

Bit	Interrupt Name	Cause of Interrupt	Function That Generates the Interrupt	Related Status
CTRT	Control transfer stage transition interrupt	When a stage transition is detected in control transfer • Setup stage completed • Control write transfer status stage transition • Control read transfer status stage transition • Control transfer completed • A control transfer sequence error occurred	Function	CTSQ
BEMP	Buffer empty interrupt	• When transmission of all of the data in the buffer memory has been completed • When an excessive maximum packet size error has been detected	Host, Function	BEMPSTS. PIPEBEMP

chanhvinh.com

Bit	Interrupt Name	Cause of Interrupt	Function That Generates the Interrupt	Related Status
NRDY	Buffer not ready interrupt	When the host controller function is selected: • When STALL is received from the peripheral side for the issued token • When a response cannot be received correctly from the peripheral side for the issued token (No response is returned three consecutive times or a packet reception error occurred three consecutive times.) • When an overrun/underrun occurred during isochronous transfer When the function controller function is selected: • When a token is received while the PID bits are set to BUF and transmission is not enabled for the buffer memory • When a CRC error or a bit stuffing error occurred during data reception in isochronous transfer • When an interval error occurred during data reception in isochronous transfer	Host, function	NRDYSTS.PIPENRDY
BRDY	Buffer ready interrupt	When the buffer is ready (reading or writing is enabled)	Host, function	BRDYSYS PIPEBRDY
BCHG	Bus change interrupt	When a change of USB bus state is detected	Host	—

chanhvinh.com

Bit	Interrupt Name	Cause of Interrupt	Function That Generates the Interrupt	Related Status
DTCH	Device disconnection	When disconnection of a peripheral device is detected	Host	—
ATTCH	Device connection detection	When J-state or K-state is detected on the USB port for 2.5 μs. Used for checking whether a peripheral device is connected.	Host	—
EOFERR	EOF error detection	When EOF error of a peripheral device is detected	Host	—
SACK	Normal setup operation	When the normal response (ACK) for the setup transaction is received	Host	—
SIGN	Setup error	When a setup transaction error (no response or ACK packet corruption) is detected three consecutive times.	Host	—

chanhvinh.com

Figure 29.2 shows a diagram relating to interrupts of this module.

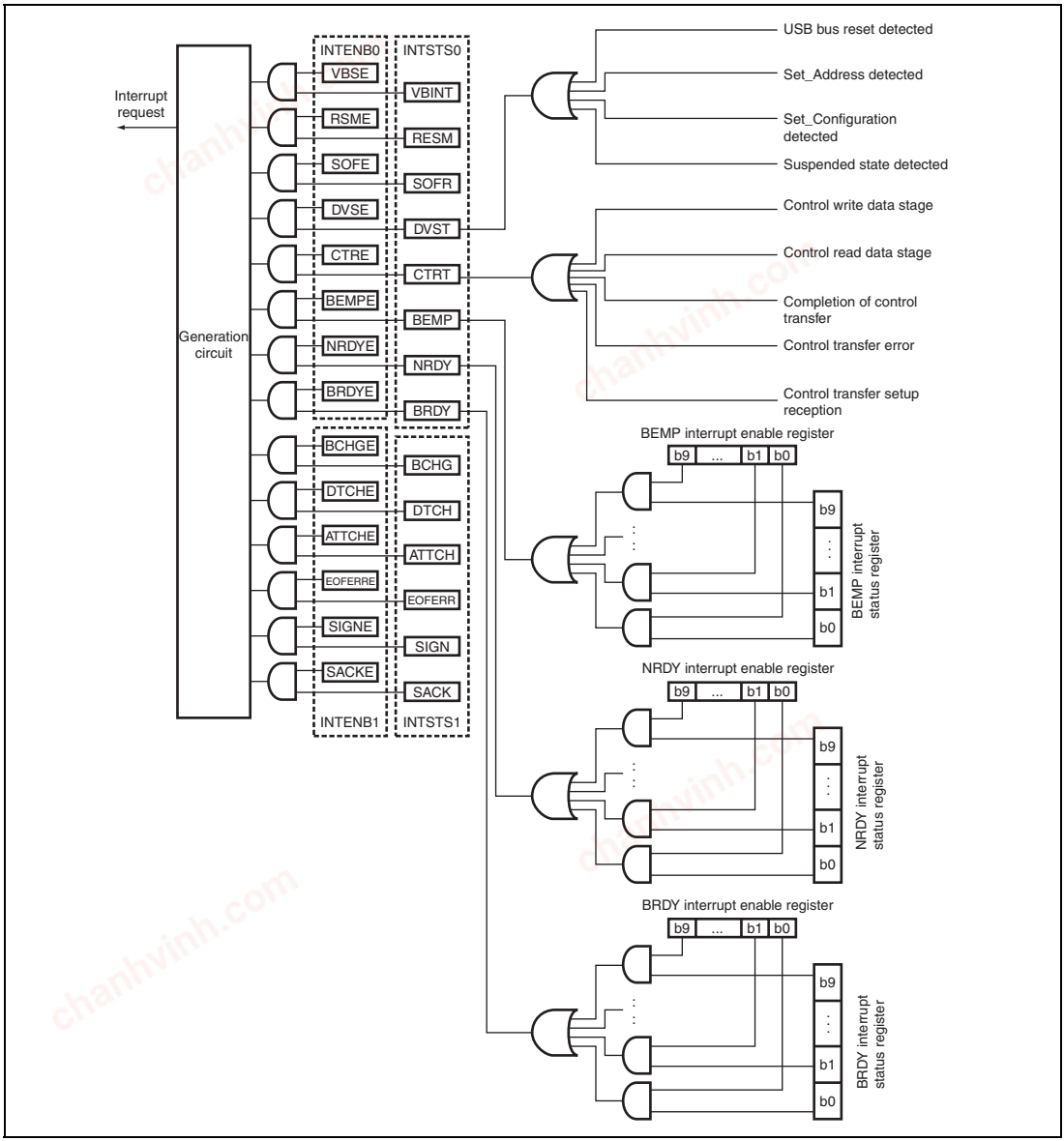

Figure 29.2 Items Relating to Interrupts

chanhvinh.com

(1) BRDY Interrupt

The BRDY interrupt is generated when either of the host controller function or function controller function is selected. The following shows the conditions under which this module sets 1 to a corresponding bit in BRDYSTS. Under this condition, this module generates BRDY interrupt, if the PIPEBRDYE bit in BRDYENB that corresponds to the pipe to 1 and the BRDYE bit in INTENB0 have been set to 1.

The conditions for generating and clearing the BRDY interrupt depend on the settings of the BRDYM bit and BFRE bit for the pertinent pipe as described below.

(a) When the BRDYM bit is 0 and BFRE bit is 0

With these settings, the BRDY interrupt indicates that the FIFO port is accessible.

On any of the following conditions, this module generates the internal BRDY interrupt request trigger and sets 1 to the PIPEBRDY bit corresponding to the pertinent pipe.

(i) For the pipe in the transmitting direction:

- When the DIR bit is changed from 0 to 1.
- When packet transmission is completed using the pertinent pipe when write-access from the CPU to the FIFO buffer for the pertinent pipe is disabled (when the BSTS bit is read as 0).

  In continuous transmission/reception mode, the request trigger is generated on completion of transmitting data of one plane of the FIFO buffer.
- When one FIFO buffer is empty on completion of writing data to the other FIFO buffer in double buffer mode.

  The request trigger is not generated until completion of writing data to the currently-written FIFO buffer plane even if transmission to the other FIFO buffer is completed.
- When the hardware flushes the buffer of the pipe for isochronous transfers.
- When 1 is written to the ACLRM bit, which causes the FIFO buffer to make transition from the write-disabled to write-enabled state.

The request trigger is not generated for the DCP (that is, during data transmission for control transfers).

chanhvinh.com

(ii) For the pipe in the receiving direction:

— When packet reception is completed successfully thus enabling the FIFO buffer to be read when read-access from the CPU to the FIFO buffer for the pertinent pipe is disabled (when the BSTS bit is read as 0).

The request trigger is not generated for the transaction in which DATA-PID disagreement occurs.

In continuous transmission/reception mode, the request trigger is not generated when the data is of the specified maximum packet size and the buffer has available space.

When a short packet is received, the request trigger is generated even if the FIFO buffer has available space.

When the transaction counter is used, the request trigger is generated on receiving the specified number of packets. In this case, the request trigger is generated even if the FIFO buffer has available space.

— When one FIFO buffer is read-enabled on completion of reading data from the other FIFO buffer in double buffer mode.

The request trigger is not generated until completion of reading data from the currently-read FIFO buffer plane even if reception by the other FIFO buffer is completed.

When the function controller function is selected, the BRDY interrupt is not generated in the status stage of control transfers.
The PIPEBRDY interrupt status of the pertinent pipe can be cleared to 0 by writing 0 to the corresponding PIPEBRDY interrupt status bit in the BRDYSTS register. In this case, 1s should be written to the PIPEBRDY interrupt status bits for the other pipes.
Be sure to clear the BRDY status before accessing the FIFO buffer.

chanhvinh.com

(b) When the BRDYM bit is 0 and the BFRE bit is 1

With these settings, this module generates the BRDY interrupt on completion of reading all the data for a single transfer using the pipe in the receiving direction, and sets 1 to the PIPEBRDY bit corresponding to the pertinent pipe.

On any of the following conditions, this module determines that the last data for a single transfer has been received.

- When a short packet including a zero-length packet is received.
- When the transaction counter register (TRNCNT bits) is used and the number of packets specified by the TRNCNT bits are completely received.

When the pertinent data is completely read out after any of the above determination conditions has been satisfied, this module determines that all the data for a single transfer has been completely read out.

When a zero-length packet is received while the FIFO buffer is empty, the USB 2.0 host/function module determines that all the data for a single transfer has been read at the point at which the FRDY bit is set to 1 and the DTLN bit cleared to 0 in the FIFO port control register. In this case, to start the next transfer, write 1 to the BCLR bit in the corresponding FIFOCTR register.

With these settings, this module does not detect the BRDY interrupt for the pipe in the transmitting direction.

The PIPEBRDY interrupt status of the pertinent pipe can be cleared to 0 by writing 0 to the corresponding PIPEBRDY interrupt status bit. In this case, 1s should be written to the PIPEBRDY interrupt status bits for the other pipes.

In this mode, the BFRE bit setting should not be modified until all the data for a single transfer has been processed. When it is necessary to modify the BFRE bit before completion of processing, all the FIFO buffers for the pertinent pipe should be cleared using the ACLRM bit.

chanhvinh.com

(c) When the BRDYM bit is 1 and the BFRE bit is 0

With these settings, the PIPEBRDY values are linked to the BSTS bit settings for each pipe. In other words, the BRDY interrupt status bits (PIPEBRDY) are set to 1 or 0 by this module depending on the FIFO buffer status.

(i) For the pipe in the transmitting direction:

The BRDY interrupt status bits are set to 1 when the FIFO buffer is write-enabled and are set to 0 when write-disabled.
However, the BRDY interrupt is not generated if the DCP in the transmitting direction is write-enabled.

(ii) For the pipe in the receiving direction:

The BRDY interrupt status bits are set to 1 when the FIFO buffer is read-enabled and are set to 0 when all the data have been read (read-disabled).
When a zero-length packet is received when the FIFO buffer is empty, the pertinent bit is set to 1 and the BRDY interrupt is continuously generated until BCLR = 1 is written. With this setting, the PIPEBRDY bit cannot be cleared to 0. When BRDYM is set to 1, all of the BFRE bits (for all pipes) should be cleared to 0.

chanhvinh.com

Figure 29.3 shows the timing at which the BRDY interrupt is generated.

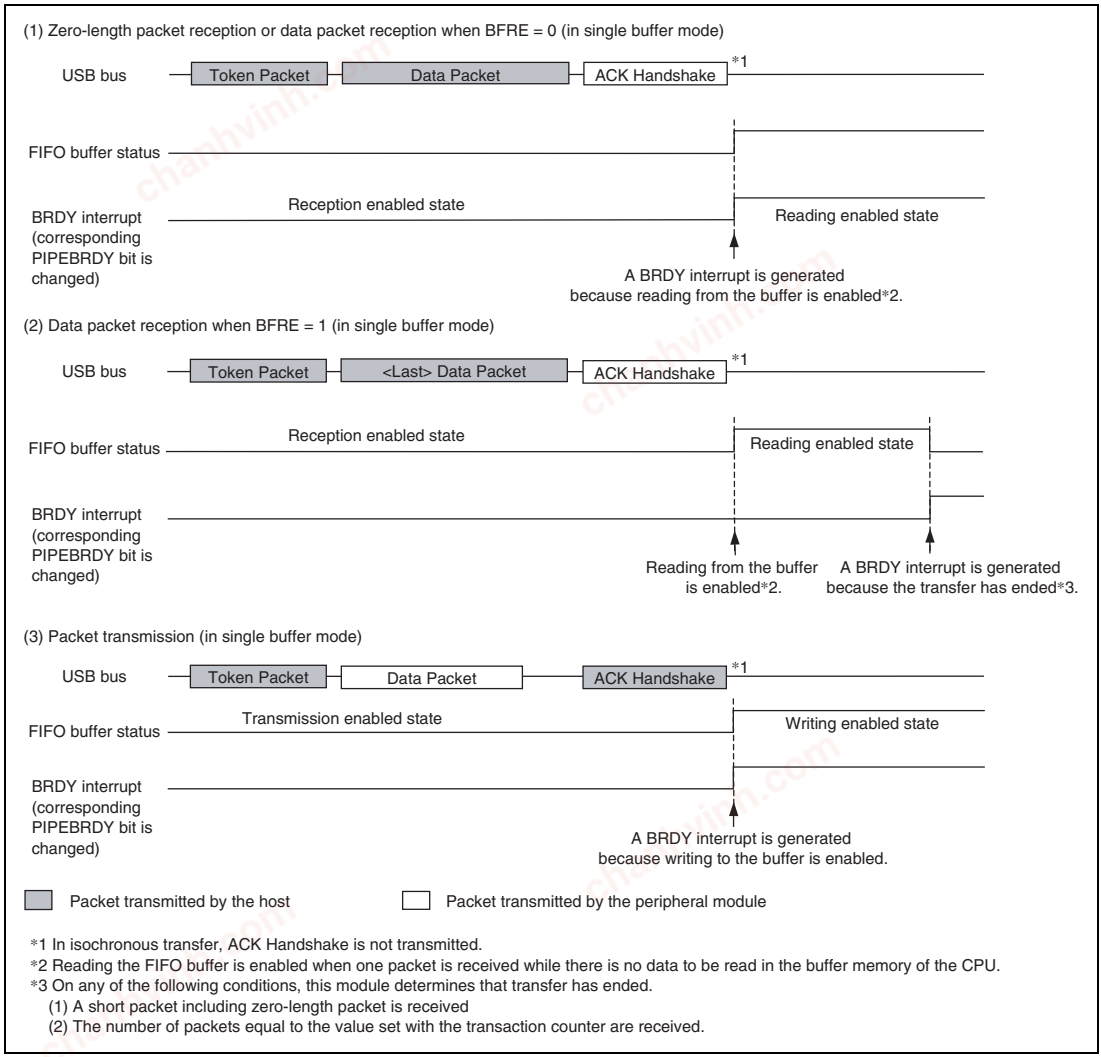

Figure 29.3 Timing at which a BRDY Interrupt is Generated

chanhvinh.com

(2) NRDY Interrupt

On generating the internal NRDY interrupt request for the pipe whose PID bits are set to BUF, this module sets the corresponding PIPENRDY bit in NRDYSTS to 1. If the corresponding bit in NRDYENB is set to 1, this module sets the NRDY bit in INTSTS0 to 1, allowing the USB interrupt to be generated.

The following describes the conditions on which this module generates the internal NRDY interrupt request for a given pipe.

However, the internal NRDY interrupt request is not generated during setup transaction execution when the host controller function is selected. During setup transactions when the host controller function is selected, the SACK or SIGN interrupt is detected.

The internal NRDY interrupt request is not generated during status stage execution of the control transfer when the function controller function is selected.

(a) When the host controller function is selected and when the connection is used in which no split transactions occur

(i) For the pipe in the transmitting direction:

On any of the following conditions, this module detects the NRDY interrupt.

- For the pipe for isochronous transfers, when the time to issue an OUT token comes in a state in which there is no data to be transmitted in the FIFO buffer.
  In this case, this module transmits a zero-length packet following the OUT token, setting the corresponding PIPENRDY bit and the OVRN bit to 1.
- During communications other than setup transactions using the pipe for the transfers other than isochronous transfers, when any combination of the following two cases occur three consecutive times: 1) no response is returned from the peripheral device (when timeout is detected before detection of the handshake packet from the peripheral device) and 2) an error is detected in the packet from the peripheral device.
  In this case, this module sets the corresponding PIPENRDY bit to 1 and modifies the setting of the PID bits of the corresponding pipe to NAK.
- During communications other than setup transactions, when the STALL handshake is received from the peripheral device (including the STALL handshake in response to PING in addition to the STALL handshake in response to OUT).
  In this case, this module sets the corresponding PIPENRDY bit to 1 and modifies the setting of the PID bits of the corresponding pipe to STALL (11).

chanhvinh.com

(ii) For the pipe in the receiving direction

— For the pipe for isochronous transfers, when the time to issue an IN token comes in a state in which there is no space available in the FIFO buffer.

In this case, this module discards the received data for the IN token, setting the PIPENRDY bit of the corresponding pipe and the OVRN bit to 1.

When a packet error is detected in the received data for the IN token, this module also sets the CRCE bit to 1.

— For the pipe for the transfers other than isochronous transfers, when any combination of the following two cases occur three consecutive times: 1) no response is returned from the peripheral device for the IN token issued by this module (when timeout is detected before detection of the DATA packet from the peripheral device) and 2) an error is detected in the packet from the peripheral device.

In this case, this module sets the corresponding PIPENRDY bit to 1 and modifies the setting of the PID bits of the corresponding pipe to NAK.

— For the pipe for isochronous transfers, when no response is returned from the peripheral device for the IN token (when timeout is detected before detection of the DATA packet from the peripheral device) or an error is detected in the packet from the peripheral device.

In this case, this module sets the corresponding PIPENRDY bit to 1. (The setting of the PID bits of the corresponding pipe to NAK is not modified.)

— For the pipe for isochronous transfers, when a CRC error or a bit stuffing error is detected in the received data packet.

In this case, this module sets the corresponding PIPENRDY bit and CRCE bit to 1.

— When the STALL handshake is received.

In this case, this module sets the corresponding PIPENRDY bit to 1 and modifies the setting of the PID bits of the corresponding pipe to STALL.

chanhvinh.com

(b) When the host controller function is selected and when the connection is used in which split transactions occur

(i) For the pipe in the transmitting direction:

— For the pipe for isochronous transfers, when the time to issue an OUT token comes in a state in which there is no data to be transmitted in the FIFO buffer.

In this case, this module transmits a zero-length packet following the OUT token, setting the corresponding PIPENRDY bit and the OVRN bit to 1 at the issuance of the start-split transaction (S-SPLIT).

— For the pipe for the transfers other than isochronous transfers, when any combination of the following two cases occur three consecutive times: 1) no response is returned from the HUB for the S-SPLIT or complete-split transaction (C-SPLIT) (when timeout is detected before detection of the handshake packet from the HUB) and 2) an error is detected in the packet from the HUB.

In this case, this module sets the PIPENRDY bit of the corresponding pipe to 1 and modifies the setting of the PID bits of the corresponding pipe to NAK.

If the NRDY interrupt is detected when the C-SPLIT is issued, this module clears the CSSTS bit to 0.

— When the STALL handshake is received in response to the C-SPLIT.

In this case, this module sets the corresponding PIPENRDY bit to 1, modifies the setting of the PID bits of the corresponding pipe to STALL (11) and clears the CSSTS bit to 0.

This interrupt is not detected for SETUP transactions.

— When the NYET is received in response to the C-SPLIT and the microframe number = 4.

In this case, this module sets the corresponding PIPENRDY bit to 1 and clears the CSSTS bit to 0 (does not modify the setting of the PID bits).

(ii) For the pipe in the receiving direction:

— For the pipe for isochronous transfers, when the time to issue an IN token comes in a state in which there is no space available in the FIFO buffer.

In this case, this module discards the received data for the IN token, setting the corresponding PIPENRDY bit and the OVRN bit to 1 at the issuance of the S-SPLIT.

— During bulk-pipe transfers or the transfers other than SETUP transactions with the DCP, when any combination of the following two cases occur three consecutive times: 1) no response is returned from the HUB for the IN token issued by this module at the issuance of S-SPLIT or C-SPLIT (when timeout is detected before detection of the DATA packet from the HUB) and 2) an error is detected in the packet from the HUB.

chanhvinh.com

In this case, this module sets the corresponding PIPENRDY bit to 1 and modifies the setting of the PID bits of the corresponding pipe to NAK. When the condition is generated during the C-SPLIT transaction, this module clears the CSSTS bit to 0.

— During the C-SPLIT transaction for the pipe for isochronous transfers or interrupt transfers, when any combination of the following two cases occur three consecutive times: 1) no response is returned from the HUB for the IN token issued by this module (when timeout is detected before detection of the DATA packet from the HUB) and 2) an error is detected in the packet from the HUB.

On generating this condition for the pipe for interrupt transfers, this module sets the corresponding PIPENRDY bit to 1, modifies the setting of the PID bits of the corresponding pipe to NAK and clears the CSSTS bit to 0.

On generating this condition for the pipe for isochronous transfers, this module sets the corresponding PIPENRDY bit to 1 and CRCE bit to 1, and clears the CSSTS bit to 0 (does not modify the setting of the PID bits).

— During the C-SPLIT transaction, when the STALL handshake is received for the pipe for the transfers other than isochronous transfers.

In this case, this module sets the corresponding PIPENRDY bit to 1, modifies the setting of the PID bits of the corresponding pipe to STALL (11) and clears the CSSTS bit to 0.

— During the C-SPLIT transaction, when the NYET handshake is received for the pipe for the isochronous transfers or interrupt transfers and the microframe number = 4.

In this case, this module sets the corresponding PIPENRDY bit to 1 and CRCE bit to 1, and clears the CSSTS bit to 0 (does not modify the setting of the PID bits).

(c) When the function controller function is selected

(i) For the pipe in the transmitting direction:

— On receiving an IN token when there is no data to be transmitted in the FIFO buffer.

In this case, this module generates a NRDY interrupt request at the reception of the IN token, setting the PIPENRDY bit to 1. For the pipe for the isochronous transfers in which an interrupt is generated, this module transmits a zero-length packet, setting the OVRN bit to 1.

chanhvinh.com

(ii) For the pipe in the receiving direction:

— On receiving an OUT token when there is no space available in the FIFO buffer.

For the pipe for the isochronous transfers in which an interrupt is generated, this module generates a NRDY interrupt request, setting the PIPENRDY bit to 1 and OVRN bit to 1.

For the pipe for the transfers other than isochronous transfers in which an interrupt is generated, this module generates a NRDY interrupt request when a NAK handshake is transferred after the data following the OUT token was received, setting the PIPENRDY bit to 1.

However, during re-transmission (due to DATA-PID disagreement), the NRDY interrupt request is not generated. In addition, if an error occurs in the DATA packet, the NRDY interrupt request is not generated.

— On receiving a PING token when there is no space available in the FIFO buffer.

In this case, this module generates a NRDY interrupt request at the reception of the PING token, setting the PIPENRDY bit to 1.

— For the pipe for isochronous transfers, when a token is not received normally within an interval frame.

In this case, this module generates a NRDY interrupt request, setting the PIPENRDY bit to 1.

chanhvinh.com

Figure 29.4 shows the timing at which an NRDY interrupt is generated when the function controller function is selected.

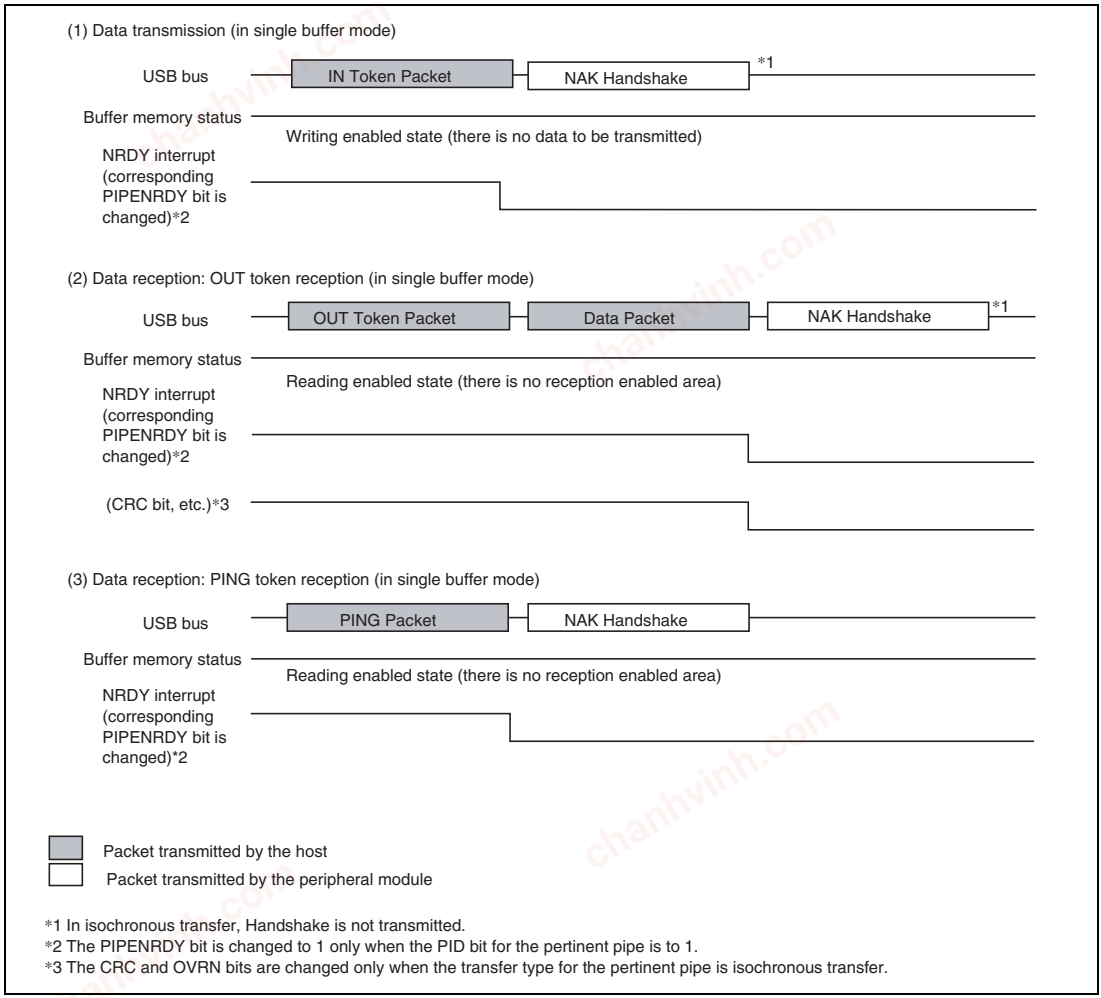

Figure 29.4 Timing at which NRDY Interrupt is Generated when Function Controller Function is Selected

chanhvinh.com

(3) BEMP Interrupt

On generating the BEMP interrupt for the pipe whose PID bits are set to BUF, this module sets the corresponding PIPEBEMP bit in BEMPSTS to 1. If the corresponding bit in BEMPENB is set to 1, this module sets the BEMP bit in INTSTS0 to 1, allowing the USB interrupt to be generated.

The following describes the conditions on which this module generates the internal BEMP interrupt request.

(a) For the pipe in the transmitting direction, when the FIFO buffer of the corresponding pipe is empty on completion of transmission (including zero-length packet transmission). In single buffer mode, the internal BEMP interrupt request is generated simultaneously with the BRDY interrupt for the pipe other than DCP. However, the internal BEMP interrupt request is not generated on any of the following conditions.

— When writing data to the FIFO buffer of the CPU has already been started on completion of transmitting data of one plane in double buffer mode.
— When the buffer is cleared (emptied) by setting the ACLRM or BCLR bit to 1.
— When IN transfer (zero-length packet transmission) is performed during the control transfer status stage in function controller mode.

(b) For the pipe in the receiving direction:
When the successfully-received data packet size exceeds the specified maximum packet size. In this case, this module generates the BEMP interrupt request, setting the corresponding PIPEBEMP bit to 1, and discards the received data and modifies the setting of the PID bits of the corresponding pipe to STALL (11).
Here, this module returns no response when used as the host controller, and returns STALL response when used as the function controller.
However, the internal BEMP interrupt request is not generated on any of the following conditions.

— When a CRC error or bit stuffing error is detected in the received data.
— When a setup transaction is being performed. Writing 0 to the PIPEBEMP bit clears the status; writing 1 to the PIPEBEMP bit has no effect.

chanhvinh.com

Figure 29.5 shows the timing at which a BEMP interrupt is generated when the function controller function has been selected.

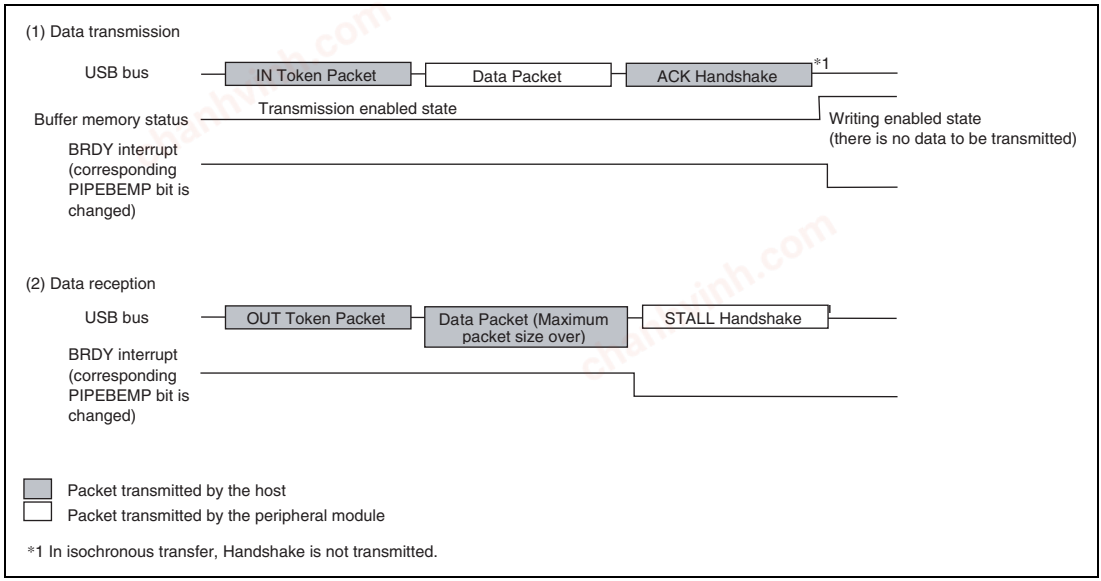

Figure 29.5 Timing at which BEMP Interrupt is Generated when Function Controller Function is Selected

(4) Device State Transition Interrupt

Figure 29.6 shows a diagram of this module device state transitions. This module controls device states and generates device state transition interrupts. However, recovery from the suspended state (resume signal detection) is detected by means of the resume interrupt. The device state transition interrupts can be enabled or disabled individually using INTENB0. The device state that made a transition can be confirmed using the DVSQ bit in INTSTS0.

To make a transition to the default state, the device state transition interrupt is generated after the reset handshake protocol has been completed.

Device state can be controlled only when the function controller function is selected. Also, the device state transition interrupts can be generated only when the function controller function is selected.

chanhvinh.com

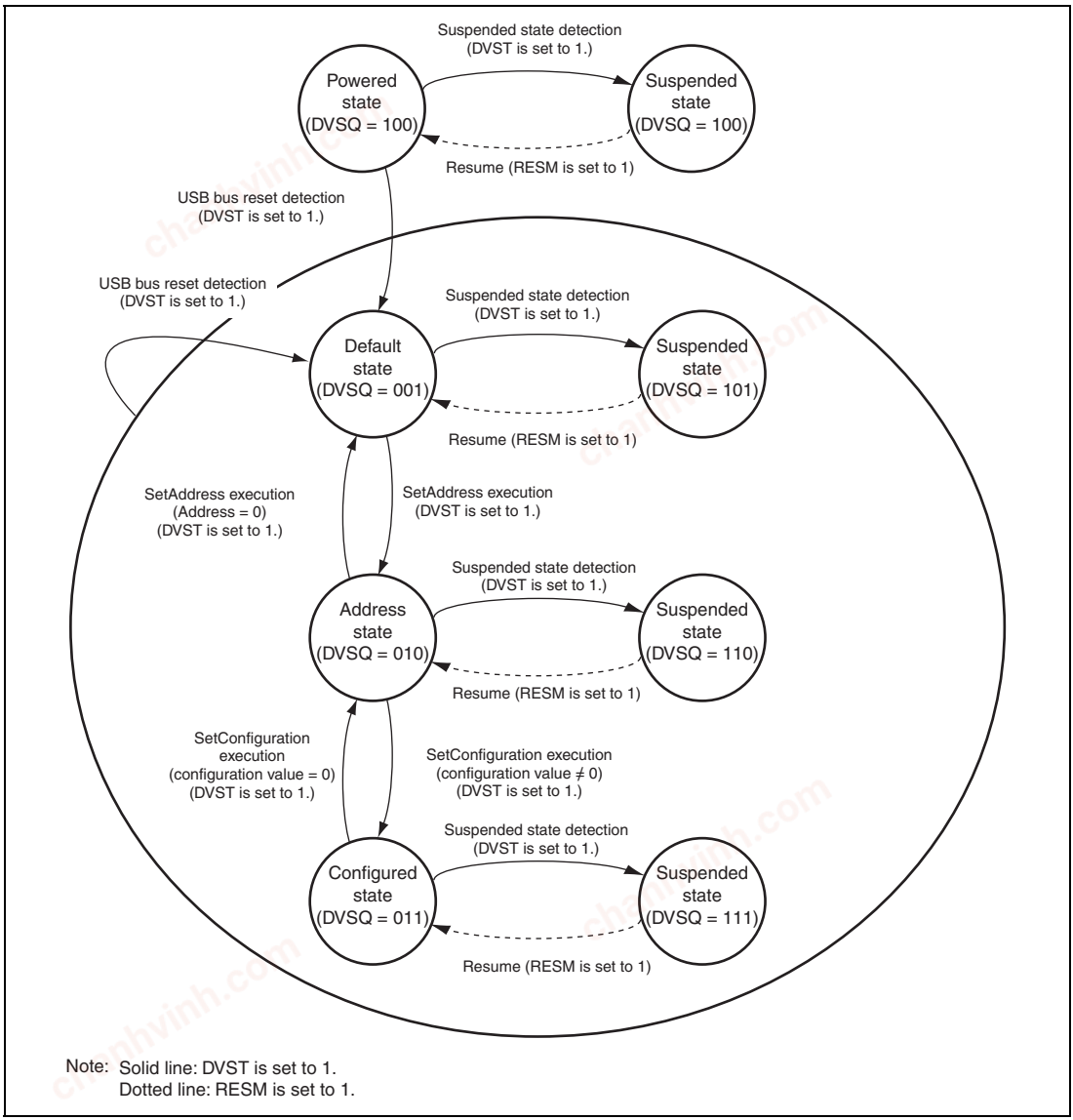

Figure 29.6 Device State Transitions

chanhvinh.com

(5) Control Transfer Stage Transition Interrupt (Function Controller Function)

Figure 29.7 shows a diagram of how this module handles the control transfer stage transition. This module controls the control transfer sequence and generates control transfer stage transition interrupts. Control transfer stage transition interrupts can be enabled or disabled individually using INTENB0. The transfer stage that made a transition can be confirmed using the CTSQ bit in INTSTS0.

The control transfer stage transition interrupts are generated only when the function controller function is selected.

The control transfer sequence errors are described below. If an error occurs, the PID bit in DCPCTR is set to B'1x (STALL).

(a) During control read transfers

- At the IN token of the data stage, an OUT or PING token is received when there have been no data transfers at all.
- An IN token is received at the status stage
- A packet is received at the status stage for which the data packet is DATAPID = DATA0

(b) During control write transfers

- At the OUT token of the data stage, an IN token is received when there have been no ACK response at all
- A packet is received at the data stage for which the first data packet is DATAPID = DATA0
- At the status stage, an OUT or PING token is received

(c) During no-data control transfers

- At the status stage, an OUT or PING token is received

At the control write transfer stage, if the number of receive data exceeds the wLength value of the USB request, it cannot be recognized as a control transfer sequence error. At the control read transfer status stage, packets other than zero-length packets are received by an ACK response and the transfer ends normally.

When a CTRT interrupt occurs in response to a sequence error, the CTSQ = 110 value is retained until CTRT = 0 is written from the system (the interrupt status is cleared). Therefore, while CTSQ = 110 is being held, the CTRT interrupt that ends the setup stage will not be generated even if a new USB request is received. (The USB 2.0 host/function module retains the setting of the CTSQ

chanhvinh.com

bits when the setup stage ends, and it generates a CTRT interrupt after the interrupt status is cleared.)

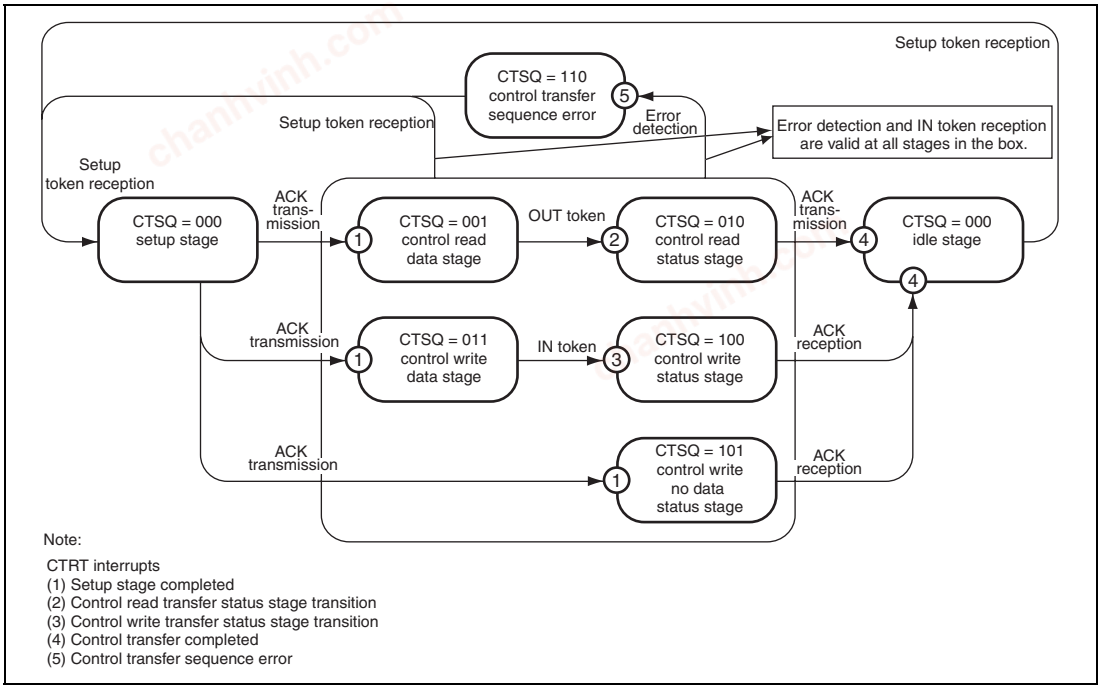

Figure 29.7 Control Transfer Stage Transitions

(6) Frame Update Interrupt

Figure 29.8 shows an example of the SOFR interrupt output timing of this module. With the host controller function selected, an interrupt is generated at the timing at which the frame number is updated. With the function controller function selected, the SOFR interrupt is generated when the frame number is updated.

When the function controller function is selected, this module updates the frame number and generates an SOFR interrupt if it detects a new SOF packet during full-speed operation. During high-speed operation, however, this module does not update the frame number, or generates no SOFR interrupt until the module enters the µSOF locked state. Also, the SOF interpolation function is not activated. The µSOF lock state is the state in which µSOF packets with different frame numbers are received twice continuously without error occurrence.

The conditions under which the µSOF lock monitoring begins and stops are as follows.

chanhvinh.com

1. Conditions under which µSOF lock monitoring begins
   USBE = 1
2. Conditions under which µSOF lock monitoring stops
   USBE = 0, a USB bus reset is received, or suspended state is detected.

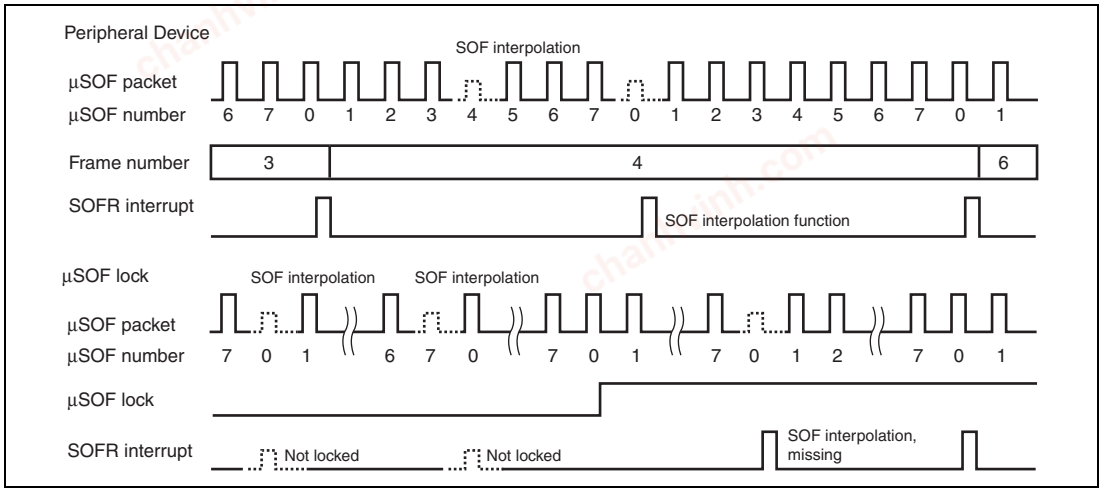

Figure 29.8 Example of SOFR Interrupt Output Timing

(7) VBUS Interrupt

If there has been a change in the VBUS pin, the VBUS interrupt is generated. The level of the VBUS pin can be checked with the VBSTS bit in INTSTS0. Whether the host controller is connected or disconnected can be confirmed using the VBUS interrupt. However, if the system is activated with the host controller connected, the first VBUS interrupt is not generated because there is no change in the VBUS pin.

(8) Resume Interrupt

With the function controller function selected, the resume interrupt is generated when the USB bus state changes (from J-state to K-state, or from J-state to SE0) while the device state is the suspended state.. Recovery from the suspended state is detected by means of the resume interrupt.

With the host controller function selected, the resume interrupt is not generated; use the BCHG interrupt to detect the change of the USB bus state.

chanhvinh.com

(9) BCHG Interrupt

The BCHG interrupt is generated when the USB bus state has changed. The BCHG interrupt can be used to detect whether or not the peripheral device is connected when the host controller function has been selected and can also be used to detect a remote wakeup. The BCHG interrupt is generated regardless of whether the host controller function or function controller function has been selected.

(10) DTCH Interrupt

The DTCH interrupt is generated if disconnection of the USB bus is detected when the host controller function has been selected. This module detects bus disconnection based on USB Specification 2.0.

After detecting the DTCH interrupt, this module controls hardware as described below (irrespective of the set value of the corresponding interrupt enable bit). Terminate all the pipes in which communications are currently carried out for the USB port and make a transition to the wait state for bus connection to the USB port (wait state for ATTCH interrupt generation).

(a) Modifies the UACT bit to 0.
(b) Puts the port into the idle state.

(11) SACK Interrupt

The SACK interrupt is generated when an ACK response for the transmitted setup packet has been received from the peripheral device with the host controller function selected. The SACK interrupt can be used to confirm that the setup transaction has been completed successfully.

(12) SIGN Interrupt

The SIGN interrupt is generated when an ACK response for the transmitted setup packet has not been correctly received from the peripheral device three consecutive times with the host controller function selected. The SIGN interrupt can be used to detect no ACK response transmitted from the peripheral device or corruption of an ACK packet.

chanhvinh.com

(13) ATTCH Interrupt

The ATTCH interrupt is generated when J-state or K-state of the full-speed or low-speed level signal is detected on the USB port for 2.5 µs in host controller mode. To be more specific, the ATTCH interrupt is detected on any of the following conditions.

(a) When K-state, SE0, or SE1 changes to J-state, and J-state continues 2.5 µs.
(b) When J-state, SE0, or SE1 changes to K-state, and K-state continues 2.5 µs.

(14) EOFERR Interrupt

The EOFERR interrupt is generated when it is detected that communication is not completed at the EOF2 timing prescribed by USB Specification 2.0.

After detecting the EOFERR interrupt, this module controls hardware as described below (irrespective of the set value of the corresponding interrupt enable bit). Terminate all the pipes in which communications are currently carried out for the pertinent port and perform re-enumeration of the pertinent port.

(a) Modifies the UACT bit for the port in which an EOFERR interrupt has been detected to 0.
(b) Puts the port in which an EOFERR interrupt has been generated into the idle state.

29.4.3 Pipe Control

Table 29.17 lists the pipe setting items of this module. With USB data transfer, data transmission has to be carried out using the logic pipe called the endpoint. This module has ten pipes that are used for data transfer.

Settings should be entered for each of the pipes in conjunction with the specifications of the system.

chanhvinh.com

Table 29.17 Pipe Setting Items

Register Name	Bit Name	Setting Contents	Remarks
DCPCFG PIPECFG	TYPE	Specifies the transfer type	PIPE1 to PIPE9: Can be set
	BFRE	Selects the BRDY interrupt mode	PIPE1 to PIPE5: Can be set
	DBLB	Selects a double buffer	PIPE1 to PIPE5: Can be set
	CNTMD	Selects continuous transfer or non-continuous transfer	PIPE1 and PIPE2: Can be set (only when bulk transfer has been selected). PIPE3 to PIPE5: Can be set
	DIR	Selects transfer direction	IN or OUT can be set
	EPNUM	Endpoint number	PIPE1 to PIPE9: Can be set A value other than 0000 should be set when the pipe is used.
	SHTNAK	Selects disabled state for pipe when transfer ends	PIPE1 and PIPE2: Can be set (only when bulk transfer has been selected) PIPE3 to PIPE5: Can be set
PIPEBUF	BUFSIZE	Buffer memory size	DCP: Cannot be set (fixed at 256 bytes) PIPE1 to PIPE5: Can be set (a maximum of 2 Kbytes can be specified in 64-byte units) PIPE6 to PIPE9: Cannot be set (fixed at 64 bytes)
	BUFNMB	Buffer memory number	DCP: Cannot be set (areas fixed at H'0 to H'3) PIPE1 to PIPE5: Can be set (can be specified in areas H'8 to H'7F) PIPE6 to PIPE9: Cannot be set (areas fixed at H'4 to H'7)

chanhvinh.com

Register Name	Bit Name	Setting Contents	Remarks
DCPMAXP PIPEMAXP	DEVSEL	Selects a device	Referenced only when the host controller function is selected.
	MXPS	Maximum packet size	Compliant with the USB standard.
PIPEPERI	IFIS	Buffer flush	PIPE1 and PIPE2: Can be set (only when isochronous transfer has been selected) PIPE3 to PIPE9: Cannot be set
	IITV	Interval counter	PIPE1 and PIPE2: Can be set (only when isochronous transfer has been selected) PIPE3 to PIPE5: Cannot be set PIPE6 to PIPE9: Can be set (only when the host controller function has been selected)
DCPCTR PIPEnCTR	BSTS	Buffer status	For the DCP, receive buffer status and transmit buffer status are switched with the ISEL bit.
	INBUFM	IN buffer monitor	Mounted for PIPE3 to PIPE5.
	SUREQ	SETUP request	Can be set only for the DCP. Can be controlled only when the host controller function has been selected.
	SUREQCLR	SUREQ clear	Can be set only for the DCP. Can be controlled only when the host controller function has been selected.
	CSCLR	CSSTS clear	Can be controlled only when the host controller function has been selected.
	CSSTS	SPLIT status indication	Can be referenced only when the host controller function has been selected.
	ATREPM	Auto response mode	PIPE1 to PIPE5: Can be set Can be controlled only when the function controller function has been selected.

chanhvinh.com

Register Name	Bit Name	Setting Contents	Remarks
DCPCTR	ACLRM	Auto buffer clear	PIPE1 to PIPE9: Can be set
PIPEnCTR	SQCLR	Sequence clear	Clears the data toggle bit
	SQSET	Sequence set	Sets the data toggle bit
	SQMON	Sequence monitor	Monitors the data toggle bit
	PBUSY	Pipe busy status	
	PID	Response PID	See section 29.4.3 (6), Response PID
PIPEnTRE	TRENB	Transaction counter enable	PIPE1 to PIPE5: Can be set
	TRCLR	Current transaction counter clear	PIPE1 to PIPE5: Can be set
PIPEnTRN	TRNCNT	Transaction counter	PIPE1 to PIPE5: Can be set

(1) Pipe Control Register Switching Procedures

The following bits in the pipe control registers can be modified only when USB communication is disabled (PID = NAK):

Registers that Should Not be Set in the USB Communication Enabled (PID = BUF) State

- Bits in DCPMAXP
- The SQCLR, SQSET, and PINGE bits in DCPCTR
- Bits in PIPECFG, PIPEBUF, PIPEMAXP and PIPEPERI
- The ATREPM, ACLRM, SQCLR and SQSET bits in PIPEnCTR
- Bits in PIPEnTRE and PIPEnTRN
- Bits in DEVADDn

Note: In addition to the above, observe the setting procedures described in the register descriptions regarding the settings of the CSCLR bit and DEVADDn register.

In order to modify the above bits from the USB communication enabled (PID = BUF) state, follow the procedure shown below:

1. Generate a bit modification request with the pipe control register.
2. Modify the PID corresponding to the pipe to NAK.

chanhvinh.com

3. Wait until the corresponding CSSTS bit is cleared to 0 (only when the host controller function has been selected).
4. Wait until the corresponding PBUSY bit is cleared to 0.
5. Modify the bits in the pipe control register.

The following bits in the pipe control registers can be modified only when the pertinent information has not been set by the CURPIPE bits in CFIFOSEL, D0FIFOSEL and D1FIFOSEL.

Registers that Should Not be Set When CURPIPE in FIFO-PORT is set.

- Bits in DCPCFG and DCPMAXP
- Bits in PIPECFG, PIPEBUF, PIPEMAXP and PIPEPERI
- ACLRM bit in PIPEnCTR

In order to modify pipe information, the CURPIPE bits should be set to the pipes other than the pipe to be modified. For the DCP, the buffer should be cleared using BCLR after the pipe information is modified.

(2) Transfer Types

The TYPE bit in PIPEPCFG is used to specify the transfer type for each pipe. The transfer types that can be set for the pipes are as follows.

1. DCP: No setting is necessary (fixed at control transfer).
2. PIPE1 and PIPE2: These should be set to bulk transfer or isochronous transfer.
3. PIPE3 to PIPE5: These should be set to bulk transfer.
4. PIPE6 to PIPE9: These should be set to interrupt transfer.

(3) Endpoint Number

The EPNUM bit in PIPEPCFG is used to set the endpoint number for each pipe. The DCP is fixed at endpoint 0. The other pipes can be set from endpoint 1 to endpoint 15.

1. DCP: No setting is necessary (fixed at end point 0).
2. PIPE1 to PIPE9: The endpoint numbers from 1 to 15 should be selected and set.
   These should be set so that the combination of the DIR bit and EPNUM bit is unique.

chanhvinh.com

(4) Maximum Packet Size Setting

The MXPS bit in DCPMAXP and PIPEMAXP is used to specify the maximum packet size for each pipe. DCP and PIPE1 to PIPE5 can be set to any of the maximum pipe sizes defined by the USB specification. For PIPE6 to PIPE9, 64 bytes are the upper limit of the maximum packet size. The maximum packet size should be set before beginning the transfer (PID = BUF).

1. DCP: 64 should be set when using high-speed operation.
2. DCP: Select and set 8, 16, 32, or 64 when using full-speed operation.
3. PIPE1 to PIPE5: 512 should be set when using high-speed bulk transfer.
4. PIPE1 to PIPE5: Select and set 8, 16, 32, or 64 when using full-speed bulk transfer.
5. PIPE1 and PIPE2: Set a value between 1 and 1024 when using high-speed isochronous transfer.
6. PIPE1 and PIPE2: Set a value between 1 and 1023 when using full-speed isochronous transfer.
7. PIPE6 to PIPE9: Set a value between 1 and 64.

The high bandwidth transfers used with interrupt transfers and isochronous transfers are not supported.

(5) Transaction Counter (For PIPE1 to PIPE5 in Reading Direction)

When the specified number of transactions have been completed in the data packet receiving direction, this module recognizes that the transfer has ended. The transaction counter function is available when the pipes assigned to the D0FIFO/D1FIFO port have been set in the direction of reading data from the buffer memory. Two transaction counters are provided: one is the TRNCNT register that specifies the number of transactions to be executed and the other is the current counter that internally counts the number of executed transactions. When the current counter value matches the number of the transactions specified in TRNCNT, reading the buffer memory is enabled. The current counter of the transaction counter function is initialized by the TRCLR bit, so that the transactions can be counted again starting from the beginning. The information read from TRNCNT differs depending on the setting of the TRENB bit.

- TRENB = 0: The specified transaction counter value can be read.
- TRENB = 1: The current counter value indicating the internally counted number of executed transactions can be read.

When operating the TRCLR bit, the following should be noted.

- If the transactions are being counted and PID = BUF, the current counter cannot be cleared.
- If there is any data left in the buffer, the current counter cannot be cleared.

chanhvinh.com

(6) Response PID

The PID bits in DCPCTR and PIPEnCTR are used to set the response PID for each pipe.

The following shows this module operation with various response PID settings:

(a) Response PID settings when the host controller function is selected

The response PID is used to specify the execution of transactions.

- NAK setting: Using pipes is disabled. No transaction is executed.
- BUF setting: Transactions are executed based on the status of the buffer memory. For OUT direction: If there are transmit data in the buffer memory, an OUT token is issued.
  For IN direction: If there is an area to receive data in the buffer memory, an IN token is issued.
- STALL setting: Using pipes is disabled. No transaction is executed.

Setup transactions for the DCP are set with the SUREQ bit.

(b) Response PID settings when the function controller function is selected

The response PID is used to specify the response to transactions from the host.

- NAK setting: The NAK response is always returned in response to the generated transaction.
- BUF setting: Responses are made to transactions based on the status of the buffer memory.
- STALL setting: The STALL response is always returned in response to the generated transaction.

For setup transactions, an ACK response is always returned, regardless of the PID setting, and the USB request is stored in the register.

This module may carry out writing to the PID bits, depending on the results of the transaction.

(a) When the host controller function has been selected and the response PID is set by hardware

- NAK setting: In the following cases, PID = NAK is set and issuing of tokens is automatically stopped:
  - When, during a transfer other than isochronous transfer, three receive errors such as no response, bit stuffing error, or CRC error are returned in succession after token transmission.
  - When, during isochronous transfer, three receive errors such bit stuffing error or CRC error are returned in succession after token transmission.

chanhvinh.com

— When a short packet is received in the data stage of control read transfer while the SHTNAK bit in the DCPCFG register is set to 1.
— If a short packet is received when the SHTNAK bit in PIPECFG has been set to 1 for bulk transfer.
— If the transaction counter ended when the SHTNAK bit has been set to 1 for bulk transfer.

- BUF setting: There is no BUF writing by this module.
- STALL setting: In the following cases, PID = STALL is set and issuing of tokens is automatically stopped:
  — When STALL is received in response to the transmitted token.
  — When the size of the receive data packet exceeds the maximum packet size.

(b) When the function controller function has been selected and the response PID is set by hardware

- NAK setting: In the following cases, PID = NAK is set and NAK is always returned in response to transactions:
  — When the SETUP token is received normally (DCP only).
  — If the transaction counter ended or a short packet is received when the SHTNAK bit in PIPECFG has been set to 1 for bulk transfer.
- BUF setting: There is no BUF writing by this module.
- STALL setting: In the following cases, PID = STALL is set and STALL is always returned in response to transactions:
  — When the size of the receive data packet exceeds the maximum packet size.
  — When a control transfer sequence error has been detected (DCP only).

chanhvinh.com

(7) Data PID Sequence Bit

This module automatically toggles the sequence bit in the data PID when data is transferred normally in the control transfer data stage, bulk transfer and interrupt transfer. The sequence bit of the data PID that was transmitted can be confirmed with the SQMON bit in DCPCTR and PIPEnCTR. When data is transmitted, the sequence bit switches at the timing at which the ACK handshake is received. When data is received, the sequence bit switches at the timing at which the ACK handshake is transmitted. The SQCLR bit in DCPCTR and the SQSET bit in PIPEnCTR can be used to change the data PID sequence bit.

When the function controller function has been selected and control transfer is used, this module automatically sets the sequence bit when a stage transition is made. The bit is set to DATA1 when the setup stage ends. In the status stage, DATA1 is returned without referencing the sequence bit. Therefore, settings are not required. However, when the host controller function has been selected and control transfer is used, the sequence bit should be set at the stage transition.

For the Clearfeature request transmission or reception, the data PID sequence bit should be set, regardless of whether the host controller function or function controller function is selected.

With pipes for which isochronous transfer has been set, sequence bit operation cannot be carried out using the SQSET bit.

(8) Response PID = NAK Function

This module has a function that disables pipe operation (PID response = NAK) at the timing at which the final data packet of a transaction is received (this module automatically distinguishes this based on reception of a short packet or the transaction counter) by setting the SHTNAK bit in PIPECFG to 1.

When a double buffer is being used for the buffer memory, using this function enables reception of data packets in transfer units. If pipe operation has disabled, the pipe has to be set to the enabled state again (PID response = BUF).

This function can be used only when bulk transfers are used.

chanhvinh.com

(9) Auto Transfer MODE

With the pipes for bulk transfer (PIPE1 to PIPE5), when the ATREPM bit in PIPEnCTR is set to 1, a transition is made to auto response mode. During an OUT transfer (DIR = 0), OUT-NAK mode is entered, and during an IN transfer (DIR = 1), null auto response mode is entered.

(a) OUT-NAK Mode

With the pipes for bulk OUT transfer, NAK is returned in response to an OUT or PING token and an NRDY interrupt is output when the ATREPM bit is set to 1. To make a transition from normal mode to OUT-NAK mode, OUT-NAK mode should be specified in the pipe operation disabled state (response PID = NAK) before enabling pipe operation (response PID = BUF). After pipe operation has been enabled, OUT-NAK mode becomes valid. However, if an OUT token is received immediately before pipe operation is disabled, the token data is normally received, and an ACK is retuned to the host.

To make a transition from OUT-NAK mode to normal mode, OUT-NAK mode should be canceled in the pipe operation disabled state (response PID = NAK) before enabling pipe operation (response PID = BUF). In normal mode, reception of OUT data is enabled and an ACK is returned in response to a PING token if the buffer is ready to receive data.

(b) Null Auto Response Mode

With the pipes for bulk IN transfer, zero-length packets are continuously transmitted when the ATREPM bit is set to 1.

To make a transition from normal mode to null auto response mode, null auto response mode should be set in the pipe operation disabled state (response PID = NAK) before enabling pipe operation (response PID = BUF). After pipe operation has been enabled, null auto response mode becomes valid. Before setting null auto response mode, INBUFM = 0 should be confirmed because the mode can be set only when the buffer is empty. If the INBUFM bit is 1, the buffer should be emptied with the ACLRM bit. While a transition to null auto response mode is being made, data should not be written from the FIFO port.

To make a transition from null auto response mode to normal mode, pipe operation disabled state (response PID = NAK) should be retained for the period of zero-length packet transmission (full-speed: 10 µs, high-speed: 3 µs) before canceling null auto response mode. In normal mode, data can be written from the FIFO port; therefore, packet transmission to the host is enabled by enabling pipe operation (response PID = BUF).

chanhvinh.com

29.4.4 FIFO Buffer Memory

(1) FIFO Buffer Memory Allocation

Figure 29.9 shows an example of a FIFO buffer memory map for this module. The FIFO buffer memory is an area shared by the CPU and this module. In the FIFO buffer memory status, there are times when the access right to the buffer memory is allocated to the user system (CPU side), and times when it is allocated to this module (SIE side).

The buffer memory sets independent areas for each pipe. In the memory areas, 64 bytes comprise one block, and the memory areas are set using the first block number of the number of blocks (specified using the BUFNMB and BUFSIZE bits in PIPEBUF).

Independent buffer memory areas should be set for each pipe. Each memory area can be set using the first block number and the number of blocks (specified using the BUFNMB and BUFSIZE bits in PIPEBUF), where one block comprises 64 bytes.

When continuous transfer mode has been selected using the CNTMD bit in PIPEnCFG, the BUFSIZE bits should be set so that the buffer memory size should be an integral multiple of the maximum packet size. When double buffer mode has been selected using the DBLB bit in PIPEnCFG, two planes of the memory area specified using the BUFSIZE bits in PIPEBUF can be assigned to a single pipe.

Moreover, three FIFO ports are used for access to the buffer memory (reading and writing data). A pipe is assigned to the FIFO port by specifying the pipe number using the CURPIPE bit in C/DnFIFOSEL.

The buffer statuses of the various pipes can be confirmed using the BSTS bit in DCPCTR and the INBUFM bit in PIPEnCTR. Also, the access right of the FIFO port can be confirmed using the FRDY bit in CFIFOCTR or DnFIFOCTR.

chanhvinh.com

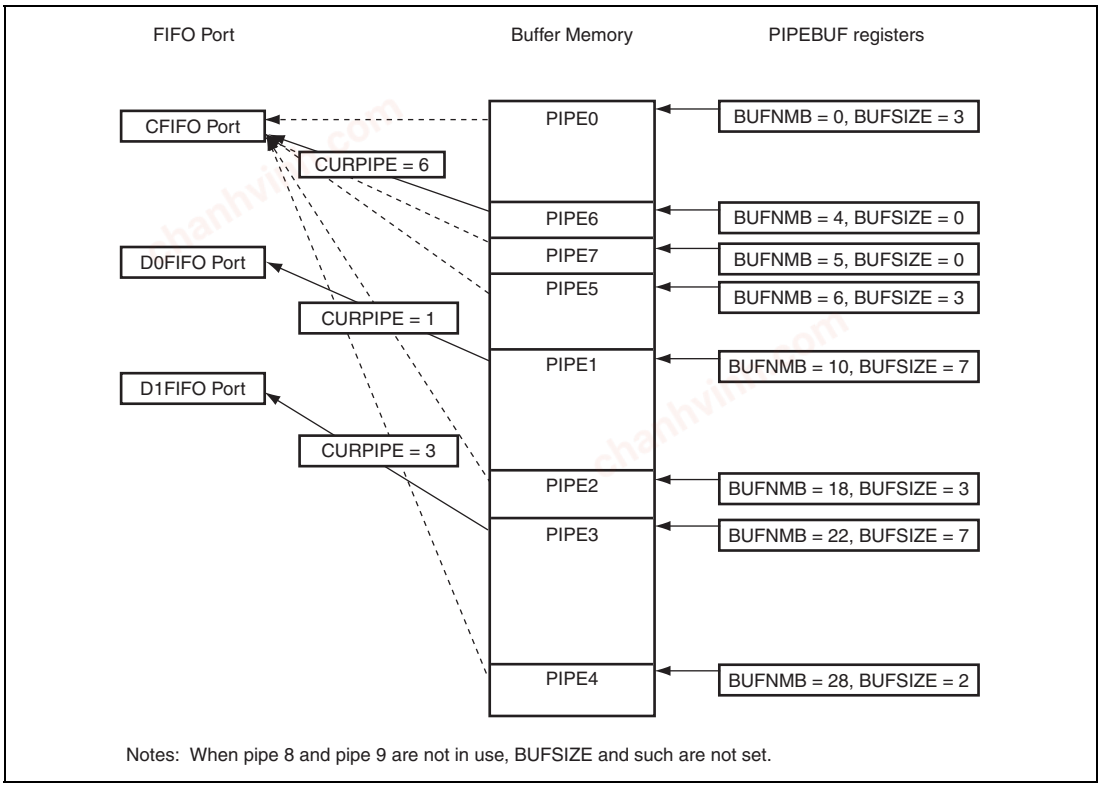

Figure 29.9 Example of a Buffer Memory Map

(a) Buffer Status

Tables 29.18 and 29.19 show the buffer status. The buffer memory status can be confirmed using the BSTS bit in DCPCTR and the INBUFM bit in PIPEnCTR. The access direction for the buffer memory can be specified using either the DIR bit in PIPEnCFG or the ISEL bit in CFIFOSEL (when DCP is selected).

The INBUFM bit is valid for PIPE0 to PIPE5 in the sending direction.

For an IN pipe uses double buffer, the BSTS bit can be used to monitor the buffer memory status of CPU side and the INBUFM bit to monitor the buffer memory status of SIE side. In the case like the BEMP interrupt may not shows the buffer empty status because the CPU (direct memory access controller) writes data slowly, the INBUFM bit can be used to confirm the end of sending.

chanhvinh.com

Table 29.18 Buffer Status Indicated by the BSTS Bit

ISEL or DIR	BSTS	Buffer Memory State
0 (receiving direction)	0	There is no received data, or data is being received. Reading from the FIFO port is inhibited.
0 (receiving direction)	1	There is received data, or a zero-length packet has been received. Reading from the FIFO port is allowed. However, because reading is not possible when a zero-length packet is received, the buffer must be cleared.
1 (transmitting direction)	0	The transmission has not been finished. Writing to the FIFO port is inhibited.
1 (transmitting direction)	1	The transmission has been finished. CPU write is allowed.

Table 29.19 Buffer Status Indicated by the INBUFM Bit

IDIR	INBUFM	Buffer Memory State
0 (receiving direction)	Invalid	Invalid
1 (transmitting direction)	0	The transmission has been finished. There is no waiting data to be transmitted.
1 (transmitting direction)	1	The FIFO port has written data to the buffer. There is data to be transmitted

chanhvinh.com

(b) FIFO Buffer Clearing

Table 29.20 shows the clearing of the FIFO buffer memory by this module. The buffer memory can be cleared using the three bits indicated below.

Table 29.20 List of Buffer Clearing Methods

Bit Name	BCLR	DCLRM	ACLRM
Register	CFIFOCTR DnFIFOCTR	DnFIFOSEL	PIPEnCTR
Function	Clears the buffer memory on the CPU side	In this mode, after the data of the specified pipe has been read, the buffer memory is cleared automatically.	This is the auto buffer clear mode, in which all of the received packets are discarded.
Clearing method	Cleared by writing 1	1: Mode valid 0: Mode invalid	1: Mode valid 0: Mode invalid

(c) Buffer Areas

Table 29.21 shows the FIFO buffer memory map of this controller. The buffer memory has special fixed areas to which pipes are assigned in advance, and user areas that can be set by the user.

The buffer for the DCP is a special fixed area that is used both for control read transfers and control write transfers.

The PIPE6 to PIPE9 area is assigned in advance, but the area for pipes that are not being used can be assigned to PIPE1 to PIPE5 as a user area.

The settings should ensure that the various pipes do not overlap. Note that each area is twice as large as the setting value in the double buffer.

Also, the buffer size should not be specified using a value that is less than the maximum packet size.

chanhvinh.com

Table 29.21 Buffer Memory Map

Buffer Memory Number	Buffer Size	Pipe Setting	Note
H'0 to H'3	256 bytes	Fixed area only for the DCP	Single buffer, continuous transfers enabled
H'4	64 bytes	Fixed area for PIPE6	Single buffer
H'5	64 bytes	Fixed area for PIPE7	Single buffer
H'6	64 bytes	Fixed area for PIPE8	Single buffer
H'7	64 bytes	Fixed area for PIPE9	Single buffer
H'8 to H'7F	Up to 7616 bytes	PIPE1 to PIPE5 user area	Double buffer can be set, continuous transfers enabled

(d) Auto Buffer Clear Mode Function

With this module, all of the received data packets are discarded if the ACLRM bit in PIPEnCTR is set to 1. If a normal data packet has been received, the ACK response is returned to the host controller. This function can be set only in the buffer memory reading direction.

Also, if the ACLRM bit is set to 1 and then to 0, the buffer memory of the selected pipe can be cleared regardless of the access direction.

(e) Buffer Memory Specifications (Single/Double Setting)

Either a single or double buffer can be selected for PIPE1 to PIPE5, using the DBLB bit in PIPEnCFG. The double buffer is a function that assigns two memory areas specified with the BUFSIZE bit in PIPEBUF to the same pipe. Figure 29.10 shows an example of buffer memory settings for this module.

chanhvinh.com

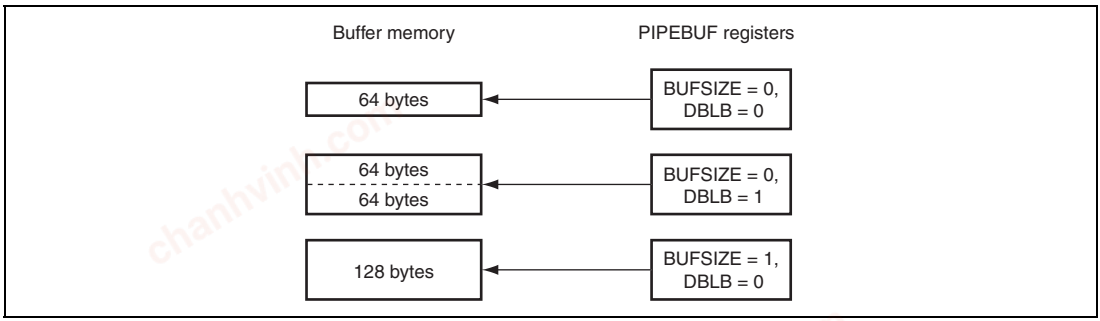

Figure 29.10 Example of Buffer Memory Settings

(f) Buffer Memory Operation (Continuous Transfer Setting)

Either the continuous transfer mode or the non-continuous transfer mode can be selected, using the CNTMD bit in PIPEnCFG. This selection is valid for PIPE1 to PIPE5.

The continuous transfer mode function is a function that sends and receives multiple transactions in succession. When the continuous transfer mode is set, data can be transferred without interrupts being issued to the CPU, up to the buffer sizes assigned for each of the pipes.

In the continuous sending mode, the data being written is divided into packets of the maximum packet size and sent. If the data being sent is less than the buffer size (short packet, or the integer multiple of the maximum packet size is less than the buffer size), BVAL = 1 must be set after the data being sent has been written.

In the continuous reception mode, interrupts are not issued during reception of packets up to the buffer size, until the transaction counter has ended, or a short packet is received.

Table 29.22 describes the relationship between the transfer mode settings by CNTMD bit and the timings at which reading data or transmitting data from the FIFO buffer is enabled.

chanhvinh.com

Table 29.22 Relationship between Transfer Mode Settings by CNTMD Bit and Timings at which Reading Data or Transmitting Data from FIFO Buffer is Enabled

Continuous or Non-Continuous Transfer Mode	Method of Determining if Reading or Transmitting Data is Enabled
Non-continuous transfer (CNTMD = 0)	In the receiving direction (DIR = 0), reading data from the FIFO buffer is enabled when: • This module receives one packet.
	• In the transmitting direction (DIR = 1), transmitting data from the FIFO buffer is Data of the maximum packet size is written to the FIFO buffer. or • Data of the short packet size (including 0-byte data) is written to the FIFO buffer and then writes 1 to BVAL.
Continuous transfer (CNTMD = 1)	In the receiving direction (DIR = 0), reading data from the FIFO buffer is enabled when: • The number of the data bytes received in the FIFO buffer assigned to the selected pipe becomes the same as the number of assigned data bytes ((BUFSIZE + 1) × 64). • This module receives a short packet other than a zero-length packet. • This module receives a zero-length packet when data is already stored in the FIFO buffer assigned to the selected pipe. or • This module receives the number of packets equal to the transaction counter value specified for the selected pipe.
	In the transmitting direction (DIR = 1), transmitting data from the FIFO buffer is enabled when: • The number of the data bytes written to the FIFO buffer becomes the same as the number of data bytes in a single FIFO buffer plane assigned to the selected pipe. or • The number of data bytes less than the size of a single FIFO buffer plane (including 0-byte data) assigned to the selected pipe is written to the FIFO buffer and then 1 is written to BVAL. • A number of data bytes less than the size of a single FIFO buffer plane assigned to the selected pipe is written to the FIFO buffer and the DMA transfer end signal is received when the last byte is written.

chanhvinh.com

Figure 29.11 shows an example of buffer memory operation for this module.

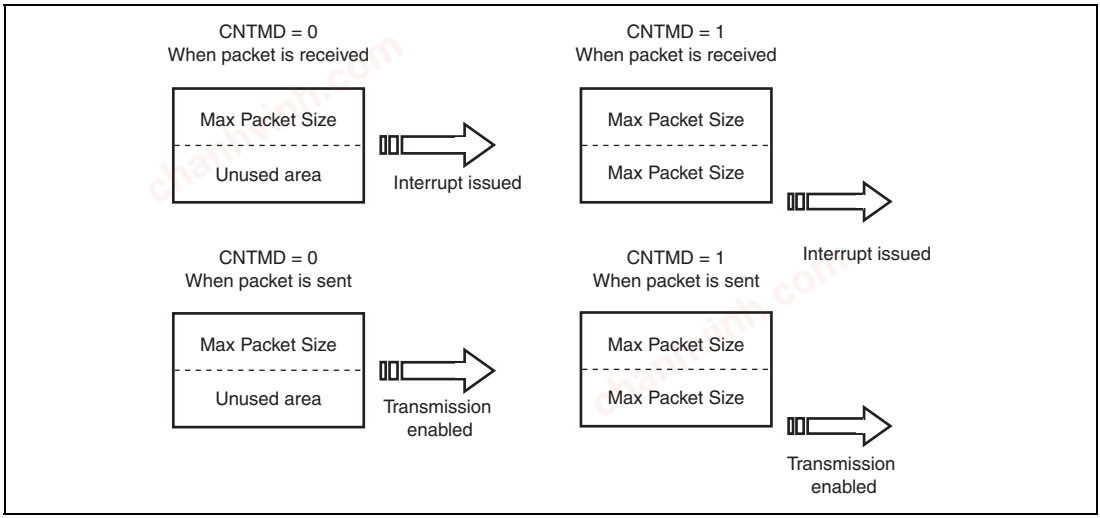

Figure 29.11 Example of Buffer Memory Operation

(2) FIFO Port Functions

Table 29.23 shows the settings for the FIFO port functions of this module. In write access, writing data until the buffer is full (or the maximum packet size for non-continuous transfers) automatically enables sending of the data. To enable sending of data before the buffer is full (or before the maximum packet size for non-continuous transfers), the BVAL bit in C/DnFIFOCTR must be set to end the writing. Also, to send a zero-length packet, the BCLR bit in the same register must be used to clear the buffer and then the BVAL bit set in order to end the writing.

In read access, reception of new packets is automatically enabled if all of the data has been read. Data cannot be read when a zero-length packet is being received (DTLN = 0), so the BCLR bit in the register must be used to release the buffer. The length of the data being received can be confirmed using the DTLN bit in C/DnFIFOCTR.

chanhvinh.com

Table 29.23 FIFO Port Function Settings

Register Name	Bit Name	Function	Note
C/DnFIFOSEL	RCNT	Selects DTLN read mode	
	REW	Buffer memory rewind (re-read, rewrite)	
	DCLRM	Automatically clears data received for a specified pipe after the data has been read	For DnFIFO only
	DREQE	Enables DMA transfers	For DnFIFO only
	MBW	FIFO port access bit width	
	BIGEND	Selects FIFO port endian	
	ISEL	FIFO port access direction	
	CURPIPE	Selects the current pipe	For DCP only
C/DnFIFOCTR	BVAL	Ends writing to the buffer memory	
	BCLR	Clears the buffer memory on the CPU side	
	DTLN	Checks the length of received data	

(a) FIFO Port Selection

Table 29.24 shows the pipes that can be selected with the various FIFO ports. The pipe to be accessed is selected using the CURPIPE bit in C/DnFIFOSEL. After the pipe is selected, whether the CURPIPE value for the pipe, which was written last, can be correctly read should be checked. (If the previous pipe number is read, it indicates that the pipe modification is being executed by this module.) Then, the FIFO port can be accessed after FRDY = 1 is checked .

Also, the bus width to be accessed should be selected using the MBW bit. The buffer memory access direction conforms to the DIR bit in PIPEnCFG. The ISEL bit determines this only for the DCP.

Table 29.24 FIFO Port Access Categorized by Pipe

Pipe	Access Method	Port that can be Used
DCP	CPU access	CFIFO port register
PIPE1 to PIPE9	CPU access	CFIFO port register
	DMA access	D0FIFO/D1FIFO port register

chanhvinh.com

(b) REW Bit

It is possible to temporarily stop access to the pipe currently being accessed, access a different pipe, and then continue processing using the current pipe once again. The REW bit in C/DnFIFOSEL is used for this.

If a pipe is selected when the REW bit is set to 1 and at the same time the CURPIPE bit in C/DnFIFOSEL is set, the pointer used for reading from and writing to the buffer memory is reset, and reading or writing can be carried out from the first byte. Also, if a pipe is selected with 0 set for the REW bit, data can be read and written in continuation of the previous selection, without the pointer used for reading from and writing to the buffer memory being reset.

To access the FIFO port, FRDY = 1 must be ensured after selecting a pipe.

(c) Accessing FIFO Port for Odd Data

For reading data from the FIFO port, when the number of data bits to be read is smaller than the access width specified by the MBW bits in the FIFO port select registers, read the data with the specified width and discard the unnecessary bits through software.

For writing data to the FIFO port, when the number of data bits to be written is smaller than the access width specified by the MBW bits in the FIFO port select registers, access the registers as shown in the following examples. In the examples, the FIFO port access width is 32 bits (MBW = 10) and 24-bit data is written to the FIFO port.

chanhvinh.com

Example 1 for writing odd data: Writing data with 16-bit width once and then with 8-bit width once

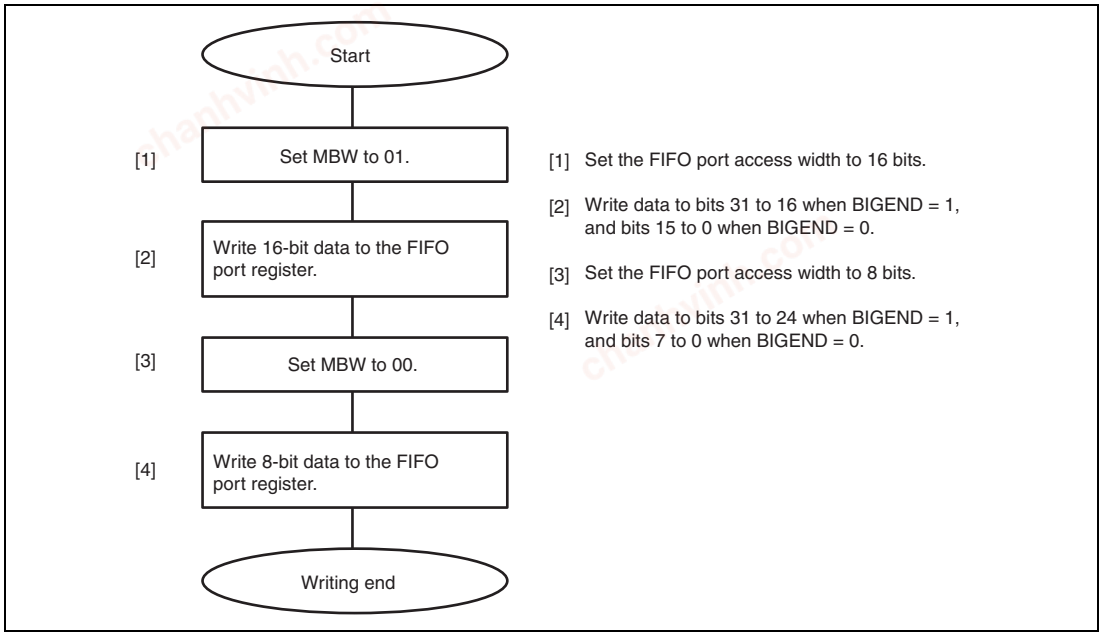

Figure 29.12 Example 1 for Writing Odd Data to FIFO Port

Example 1 for writing odd data 2: Writing data with 8-bit width three times

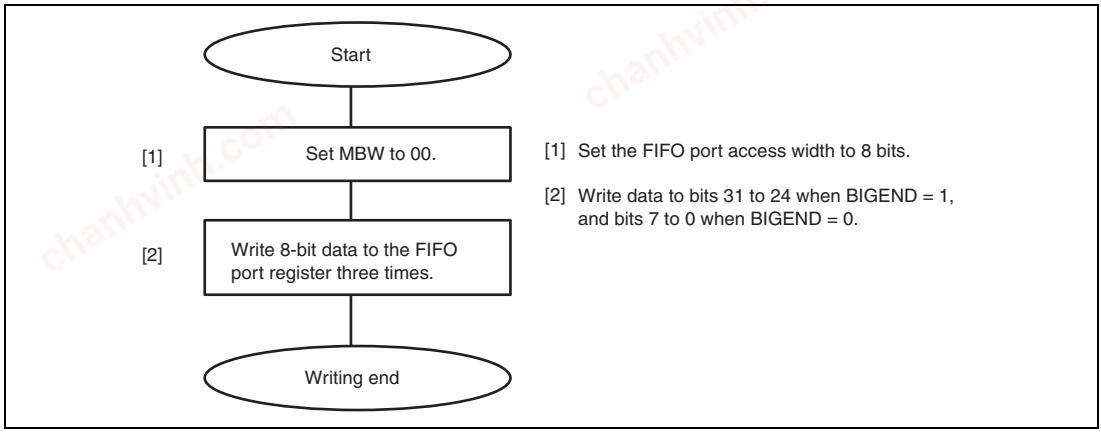

Figure 29.13 Example 2 for Writing Odd Data to FIFO Port

chanhvinh.com

(d) Modifying MBW Bits when the Pipe is in the Receiving Direction

When the specified pipe is in the receiving direction, modify the MBW bits in the FIFO port select registers (CFIFOSEL, D0FIFOSEL, D1FIFOSEL) simultaneously with the CURPIPE bits. When the DCP is currently set (CURPIPE = 000) in the CFIFO port select register, modify the MBW bits simultaneously with the CURPIPE bits or ISEL bit.

To modify only the MBW bits for the currently set pipe, follow the procedure below. Once the buffer memory starts to be read out, however, do not modify the MBW bits until the entire data has been read out.

When the selected CURPIPE is in the writing direction to buffer memory, the port access width can be changed simply by setting the MBW bits.

Once the buffer memory starts to be written to, however, do not modify the port access width from 8 bits to 16 or 32 bits, or from16 bits to 32 bits.

When CURPIPE setting is not DCP (000) for D0FIFO, D1FIFO, or CFIFO

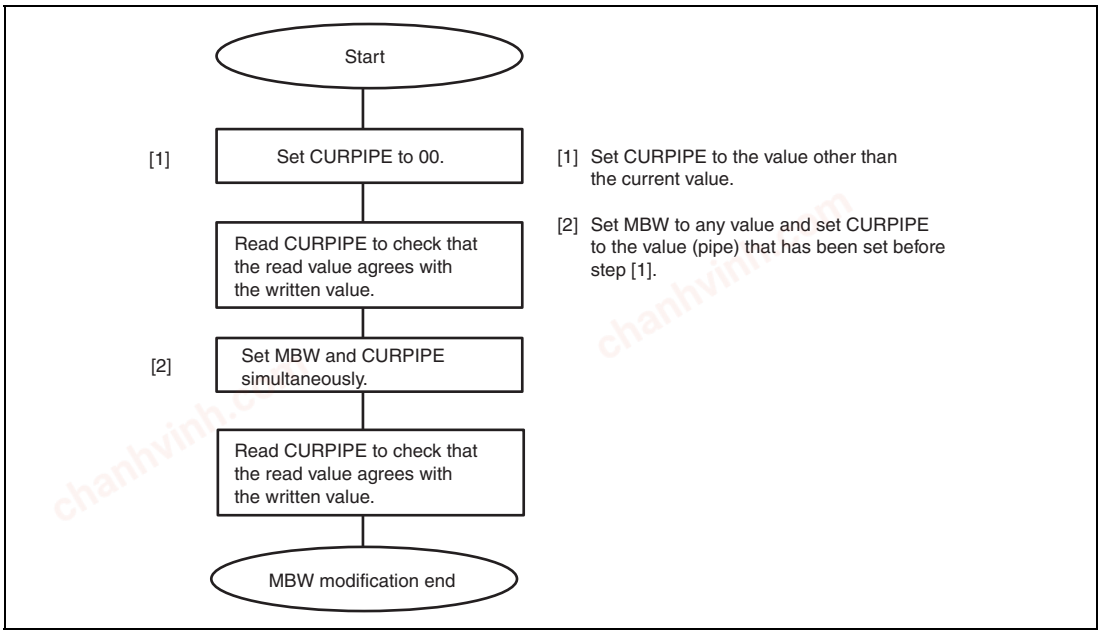

Figure 29.14 MBW Modification Procedure Example when CURPIPE Setting is not DCP (000) for D0FIFO, D1FIFO, or CFIFO

chanhvinh.com

When CURPIPE setting is DCP (000) for CFIFO

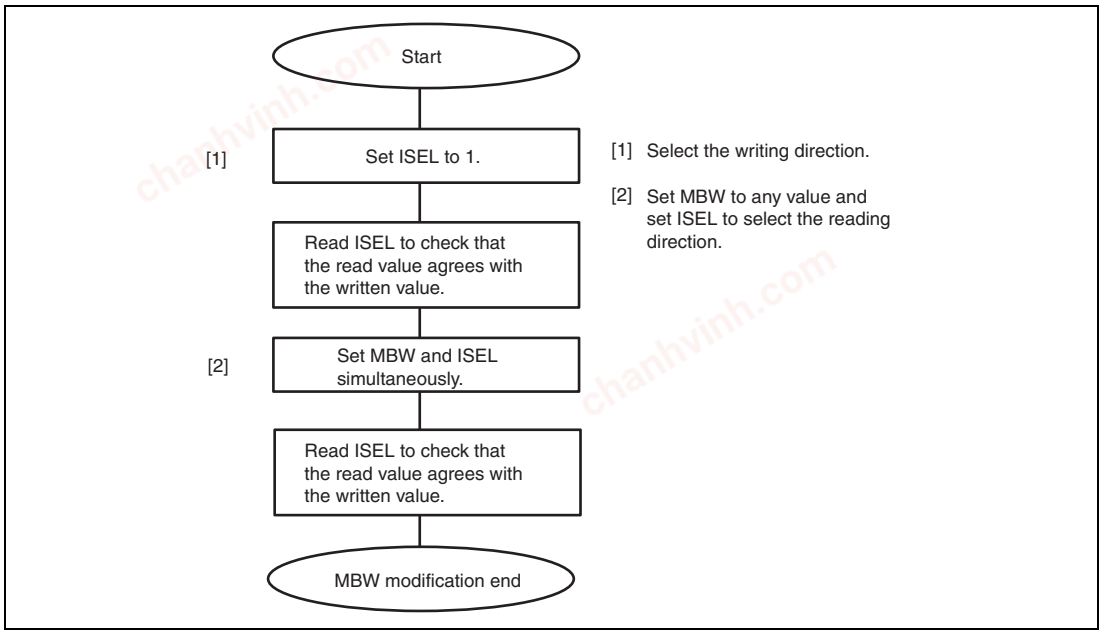

Figure 29.15 MBW Modification Procedure Example When CURPIPE Setting is DCP (000)

(3) DMA Transfers (D0FIFO/D1FIFO Port)

(a) Overview of DMA Transfers

For pipes 1 to 9, the FIFO port can be accessed using the direct memory access controller. When accessing the buffer for the pipe targeted for DMA transfer is enabled, a DMA transfer request is issued.

The unit of transfer to the FIFO port should be selected using the MBW bit in DnFIFOSEL and the pipe targeted for the DMA transfer should be selected using the CURPIPE bit. The selected pipe should not be changed during the DMA transfer.

chanhvinh.com

(b) Auto Recognition of DMA Transfer Completion

With this module, it is possible to complete FIFO data writing through DMA transfer by controlling DMA transfer end signal input. The DMA transfer end signal is output from the direct memory access controller when the controller transfers data through DMA for the times specified by the DMA transfer count register (DMATCR) of the direct memory access controller. When a transfer end signal is sampled, the module enables buffer memory transmission (the same condition as when BVAL = 1). Whether to sample the DMA transfer end signal can be specified through the TENDE bit in DnFBCFG.

Note that this function cannot be used when the DMA transfer size is set to 16 bytes.

(c) DnFIFO Auto Clear Mode (D0FIFO/D1FIFO Port Reading Direction)

If 1 is set for the DCLRM bit in DnFIFOSEL, the module automatically clears the buffer memory of the selected pipe when reading of the data from the buffer memory has been completed.

Table 29.25 shows the packet reception and buffer memory clearing processing for each of the various settings. As shown, the buffer clear conditions depend on the value set to the BFRE bit. Using the DCLRM bit eliminates the need for the buffer to be cleared even if a situation occurs that necessitates clearing of the buffer. This makes it possible to carry out DMA transfers without involving software.

This function can be set only in the buffer memory reading direction.

Table 29.25 Packet Reception and Buffer Memory Clearing Processing

Buffer Status When Packet is Received	Register Setting			
	DCLRM = 0		DCLRM = 1	
	BFRE = 0	BFRE = 1	BFRE = 0	BFRE = 1
Buffer full	Doesn't need to be cleared	Doesn't need to be cleared	Doesn't need to be cleared	Doesn't need to be cleared
Zero-length packet reception	Needs to be cleared	Needs to be cleared	Doesn't need to be cleared	Doesn't need to be cleared
Normal short packet reception	Doesn't need to be cleared	Needs to be cleared	Doesn't need to be cleared	Doesn't need to be cleared
Transaction count ended	Doesn't need to be cleared	Needs to be cleared	Doesn't need to be cleared	Doesn't need to be cleared

chanhvinh.com

29.4.5 Control Transfers (DCP)

Data transfers of the data stage of control transfers are done using the default control pipe (DCP).

The DCP buffer memory is a 256-byte single buffer, and is a fixed area that is shared for both control reading and control writing. The buffer memory can be accessed through the CFIFO port.

(1) Control Transfers when the Host Controller Function is Selected

(a) Setup Stage

USQREQ, USBVAL, USBINDX, and USBLENG are the registers that are used to transmit a USB request for setup transactions. Writing setup packet data to the registers and writing 1 to the SUREQ bit in DCPCTR transmits the specified data for setup transactions. Upon completion of transactions, the SUREQ bit is cleared to 0. The above USB request registers should not be modified while SUREQ = 1. The device address for setup transactions is specified using the DEVSEL bits in DCPMAXP.

When the data for setup transactions has been sent, a SIGN or SACK interrupt request is generated according to the response received from the peripheral device (SIGN1 or SACK bits in INTSTS1), by means of which the result of the setup transactions can be confirmed.

A data packet of DATA0 (USB request) is transmitted as the data packet for the setup transactions regardless of the setting of the SQMON bit in DCPCTR.

(b) Data Stage

Data transfers are done using the DCP buffer memory.

The access direction of the DCP buffer memory should be specified using the ISEL bit in CFIFOSEL. Also specify the transfer direction using the DIR bit in the DCPCFG register.

For the first data packet of the data stage, the data PID must be transferred as DATA1. Transaction is done by setting the data PID = DATA1 and the PID bit = BUF using the SQSET bit in DCPCTR. Completion of data transfer is detected using the BRDY or BEMP interrupts.

Setting continuous transfer mode allows data transfers over multiple packets. Note that when continuous transfer mode is set for the receiving direction, the BRDY interrupt is not generated until the buffer becomes full or a short packet is received (the integer multiple of the maximum packet size, and less than 256 bytes).

For control write transfers, when the number of data bytes to be sent is the integer multiple of the maximum packet size, a zero-length packet must be controlled to be sent at the end.

chanhvinh.com

(c) Status Stage

Zero-length packet data transfers are done in the direction opposite to that in the data stage. As with the data stage, data transfers are done using the DCP buffer memory. Transactions are done in the same manner as the data stage.

For the data packets of the status stage, the data PID must be transferred as DATA1. The data PID should be set to DATA1 using the SQSET bit in DCPCTR.

For reception of a zero-length packet, the received data length must be confirmed using the DTLN bits in CFIFOCTR after the BRDY interrupt is generated, and the buffer memory must then be cleared using the BCLR bit.

(2) Control Transfers when the Function Controller Function is Selected

(a) Setup Stage

This module always sends an ACK response in response to a setup packet that is normal with respect to this module. The operation of this module operates in the setup stage is noted below.

(i) When a new USB request is received, this module sets the following registers:

- Set the VALID bit in INTSTS0 to 1.
- Set the PID bit in DCPCTR to NAK.
- Set the CCPL bit in DCPCTR to 0.

(ii) When a data packet is received right after the SETUP packet, the USB request parameters are stored in USBREQ, USBVAL, USBINDX, and USBLENG.

Response processing with respect to the control transfer should always be carried out after first setting VALID = 0. In the VALID = 1 state, PID = BUF cannot be set, and the data stage cannot be terminated.

Using the function of the VALID bit, this module is able to interrupt the processing of a request currently being processed if a new USB request is received during a control transfer, and can send a response in response to the newest request.

Also, this module automatically judges the direction bit (bit 8 of the bmRequestType) and the request data length (wLength) of the USB request that was received, and then distinguishes between control read transfers, control write transfers, and no-data control transfers, and controls the stage transition. For a wrong sequence, the sequence error of the control transfer stage transition interrupt is generated, and the software is notified. For information on the stage control of this module, see figure 29.7.

chanhvinh.com

(b) Data Stage

Data transfers corresponding to USB requests that have been received should be done using the DCP. Before accessing the DCP buffer memory, the access direction should be specified using the ISEL bit in CFIFOSEL.

A transaction is executed by setting the PID bits in the DCPCTR register to BUF. The BRDY interrupt or the BEMP interrupt can be used to detect the end of data transfer. Use the BRDY interrupt to detect the end of control write transfers and the BEMP interrupt to detect the end of control read transfers.

If the data being transferred is larger than the size of the DCP buffer memory, the data transfer should be carried out using the BRDY interrupt for control write transfers and the BEMP interrupt for control read transfers.

With control write transfers during high-speed operation, the NYET handshake response is carried out based on the state of the buffer memory.

(c) Status Stage

Control transfers are terminated by setting the CCPL bit to 1 with the PID bit in DCPCTR set to PID = BUF.

After the above settings have been entered, this module automatically executes the status stage in accordance with the data transfer direction determined at the setup stage. The specific procedure is as follows.

(i) For control read transfers:

This module receives a zero-length packet from the USB host and sends an ACK response.

(ii) For control write transfers and no-data control transfers:

This module sends the zero-length packet from the USB host and receives an ACK response.

chanhvinh.com

(d) Control Transfer Auto Response Function

This module automatically responds to a normal SET_ADDRESS request. If any of the following errors occur in the SET_ADDRESS request, a response is necessary.

(i) bmRequestType ≠ H'00

(ii) wIndex ≠ H'00

(ii) wLength ≠ H'00

(iv) wValue > H'7F

(v) DVSQ = 011 (Configured)

For all requests other than the SET_ADDRESS request, the corresponding response is required.

chanhvinh.com

29.4.6 Bulk Transfers (PIPE1 to PIPE5)

The buffer memory specifications for bulk transfers (single/double buffer setting, or continuous/non-continuous transfer mode setting) can be selected. The maximum size that can be set for the buffer memory is 2 Kbytes. The buffer memory state is controlled by this module, with a response sent automatically for a PING packet/NYET handshake.

(1) PING Packet Control when the Host Controller Function is Selected

This module automatically sends a PING packet in the OUT direction.

On receiving an ACK handshake in the initial state in which PING packet sending mode is set, this module sends an OUT packet as noted below. The module returns to PING packet sending mode when a NAK or NYET is received during an OUT transaction.

1. Sets OUT data sending mode.
2. Sends a PING packet.
3. Receives an ACK handshake.
4. Sends an OUT data packet.
5. Receives an ACK handshake.

(Repeats steps 4 and 5.)

6. Sends an OUT data packet.
7. Receives an NAK/NYET handshake.
8. Sends a PING packet.

This module is returned to PING packet sending mode by a power-on reset, receiving a NYET/NAK handshake, clearing the sequence toggle bits (SQCLR), and setting the buffer clear bit (ACLRM) in PIPEnCTR.

chanhvinh.com

(2) NYET Handshake Control when the Function Controller Function is Selected

Table 29.26 lists the responses to received tokens during bulk transmission and control transmission. The USB 2.0 host/function module returns a NYET when an OUT token is received while there is only one packet of empty space in the buffer memory, during both bulk transmission and control transmission. However, an ACK is returned instead of a NYET even under the above conditions when a short packet is received.

Table 29.26 List of Responses to Received Tokens

Value Set for PID Bit in DCPCTR	Buffer Memory State	Token	Response	Note
NAK/STALL	—	SETUP	ACK	—
	—	IN/OUT/ PING	NAK/STALL	—
BUF	—	SETUP	ACK	—
	RCV-BRDY1	OUT/PING	ACK	If an OUT token is received, a data packet is received.
	RCV-BRDY2	OUT	NYET	Notifies whether a data packet can be received
	RCV-BRDY2	OUT (Short)	ACK	Notifies whether a data packet can be received
	RCV-BRDY2	PING	ACK	Notifies that a data packet can be received
	RCV-NRDY	OUT/PING	NAK	Notifies that a data packet cannot be received
	TRN-BRDY	IN	DATA0/DATA1	A data packet is transmitted
	TRN-NRDY	IN	NAK	Notifies that a data packet cannot be transmitted

[Legend]

RCV-BRDY1: When an OUT/PING token is received, there is space in the buffer memory for two or more packets.

RCV-BRDY2: When an OUT token is received, there is only enough space in the buffer memory for one packet.

RCV-NRDY: When a PING token is received, there is no space in the buffer memory.

TRN-BRDY: When an IN token is received, there is data to be sent in the buffer memory.

TRN-NRDY: When an IN token is received, there is no data to be sent in the buffer memory.

chanhvinh.com

29.4.7 Interrupt Transfers (PIPE6 to PIPE9)

When the function controller function is selected, this module carries out interrupt transfers in accordance with the timing controlled by the host controller. For interrupt transfers, PING packets are ignored (no responses are sent), and the ACK, NAK, and STALL responses are carried out without an NYET handshake response being made.

When the host controller function is selected, this module can set the timing of issuing a token using the interval timer. At this time, this module issues an OUT token even in the OUT direction, without issuing a PING token.

This module does not support high bandwidth transfers of interrupt transfers.

(1) Interval Counter during Interrupt Transfers when the Host Controller Function is Selected

For interrupt transfers, intervals between transactions are set in the IITV bits in PIPEPERI. This controller issues an interrupt transfer token based on the specified intervals.

(a) Counter Initialization

This controller initializes the interval counter under the following conditions.

- Power-on reset
  The IITV bits are initialized.
- Buffer memory initialization using the ACLRM bit
  The IITV bits are not initialized but the count value is. Setting the ACLRM bit to 0 starts counting from the value set in the IITV bits.

Note that the interval counter is not initialized in the following case.

- USB bus reset, USB suspended
  The IITV bits are not initialized. Setting 1 to the UACT bit starts counting from the value before entering the USB bus reset state or USB suspended state.

chanhvinh.com

(b) Operation when Transmission/Reception is Impossible at Token Issuance Timing

This module cannot issue tokens even at token issuance timing in the following cases. In such a case, this module attempts transactions at the subsequent interval.

- When the PID is set to NAK or STALL.
- When the buffer memory is full at the token sending timing in the receiving (IN) direction.
- When there is no data to be sent in the buffer memory at the token sending timing in the sending (OUT) direction.

29.4.8 Isochronous Transfers (PIPE1 and PIPE2)

This module has the following functions pertaining to isochronous transfers.

1. Notification of isochronous transfer error information
2. Interval counter (specified by the IITV bit)
3. Isochronous IN transfer data setup control (IDLY function)
4. Isochronous IN transfer buffer flush function (specified by the IFIS bit)

This module does not support the High Bandwidth transfers of isochronous transfers.

When using more than one pipe simultaneously for isochronous transfers, follow the packet constraints provided in section 5.6.3, Isochronous Transfer Packet Size Constraints, in Universal Serial Bus Revision 2.0 Specification.

(1) Error Detection with Isochronous Transfers

This module has a function for detecting the error information noted below, so that when errors occur in isochronous transfers, software can control them. Tables 29.27 and 29.28 show the priority in which errors are confirmed and the interrupts that are generated.

(a) PID errors

- If the PID of the packet being received is illegal

(b) CRC errors and bit stuffing errors

- If an error occurs in the CRC of the packet being received, or the bit stuffing is illegal

(c) Maximum packet size exceeded

- The maximum packet size exceeded the set value.

chanhvinh.com

(d) Overrun and underrun errors

- When host controller function is selected:
  - When using isochronous IN transfers (reception), the IN token was received but the buffer memory is not empty.
  - When using isochronous OUT transfers (transmission), the OUT token was transmitted, but the data was not in the buffer memory.
- When function controller function is selected:
  - When using isochronous IN transfers (transmission), the IN token was received but the data was not in the buffer memory.
  - When using isochronous OUT transfers (reception), the OUT token was received, but the buffer memory was not empty.

(e) Interval errors

When function controller function is selected, the following cases are considered as interval errors:

- During an isochronous IN transfer, the token could not be received during the interval frame.
- During an isochronous OUT transfer, the OUT token was received during frames other than the interval frame.

chanhvinh.com

Table 29.27 Error Detection when a Token is Received

Detection Priority	Error	Generated Interrupt and Status
1	PID errors	No interrupts are generated in both cases when the host controller function is selected and the function controller function is selected (ignored as a corrupted packet).
2	CRC error and bit stuffing errors	No interrupts generated in both cases when the host controller function is selected and the function controller function is selected (ignored as a corrupted packet).
3	Overrun and underrun errors	An NRDY interrupt is generated to set the OVRN bit in both cases when host controller function is selected and function controller function is selected. When the host controller function is selected, no tokens are transmitted. When the function controller function is selected, a zero-length packet is transmitted in response to IN token. However, no data packets are received in response to OUT token.
4	Interval errors	An NRDY interrupt is generated when the function controller function is selected. It is not generated when the host controller function is selected.

chanhvinh.com

Table 29.28 Error Detection when a Data Packet is Received

Detection Priority Order	Error	Generated Interrupt and Status
1	PID errors	No interrupts are generated (ignored as a corrupted packet)
2	CRC error and bit stuffing errors	An NRDY interrupt is generated to set the CRCE bit in both cases when the host controller function is selected and the function controller function is selected.
3	Maximum packet size exceeded error	A BEMP interrupt is generated to set the PID bits to STALL in both cases when the host controller function is selected and the function controller function is selected.

(2) DATA-PID

This module does not support High Bandwidth transfers. When the function controller function is selected, this module operates as follows in response to the received PID.

(a) IN direction

— DATA0: Sent as data packet PID
— DATA1: Not sent
— DATA2: Not sent
— mDATA: Not sent

(b) OUT direction (when using full-speed operation)

— DATA0: Received normally as data packet PID
— DATA1: Received normally as data packet PID
— DATA2: Packets are ignored
— mDATA: Packets are ignored

(c) OUT direction (when using high-speed operation)

— DATA0: Received normally as data packet PID
— DATA1: Received normally as data packet PID
— DATA2: Received normally as data packet PID
— mDATA: Received normally as data packet PID

chanhvinh.com

(3) Interval Counter

The isochronous interval can be set using the IITV bits in PIPEPERI. The interval counter enables the functions shown in table 29.29 when the function controller function is selected. When the host controller function is selected, this module generates the token issuance timing. When the host controller function is selected, the interval counter operation is the same as the interrupt transfer operation.

Table 29.29 Functions of the Interval Counter when the Function Controller Function is Selected

Transfer Direction	Function	Conditions for Detection
IN	IN buffer flush function	When an IN token cannot be normally received in the interval frame during an isochronous IN transfer
OUT	Notifies that a token not being received	When an OUT token cannot be normally received in the interval frame during an isochronous OUT transfer

The interval count is carried out when an SOF is received or for interpolated SOFs, so the isochronisms can be maintained even if an SOF is damaged. The frame interval that can be set is the 2^{IITV} frame or 2^{IITV} μ frames.

(a) Interval Counter Initialization when the Function Controller Function is Selected

This module initializes the interval counter under the following conditions.

- Power-on reset
  The IITV bit is initialized.
- Buffer memory initialization using the ACLRM bit
  The IITV bits are not initialized but the count value is.
- USB bus reset

After the interval counter has been initialized, the counter is started under the following conditions 1 or 2 when a packet has been transferred normally.

1. An SOF is received following transmission of data in response to an IN token, in the PID = BUF state.
2. An SOF is received after data following an OUT token is received in the PID = BUF state.

chanhvinh.com

The interval counter is not initialized under the conditions noted below.

1. When the PID bit is set to NAK or STALL
   The interval timer does not stop. This module attempts the transactions at the subsequent interval.
2. The USB bus reset or the USB is suspended
   The IITV bit is not initialized. When the SOF has been received, the counter is restarted from the value prior to the reception of the SOF.

(b) Interval Counting and Transfer Control when the Host Controller Function is Selected

This module controls the interval between token issuance operations based on the IITV bit settings. Specifically, this module issues a token for a selected pipe once every 2^{IITV} (μ) frames.

This module counts the interval every 1-ms frame for the pipes used for communications with the full-speed or low-speed peripheral devices connected to a high-speed HUB.

This module starts counting the token issuance interval at the (μ) frame following the (μ) frame in which the PID bits have been set to BUF.

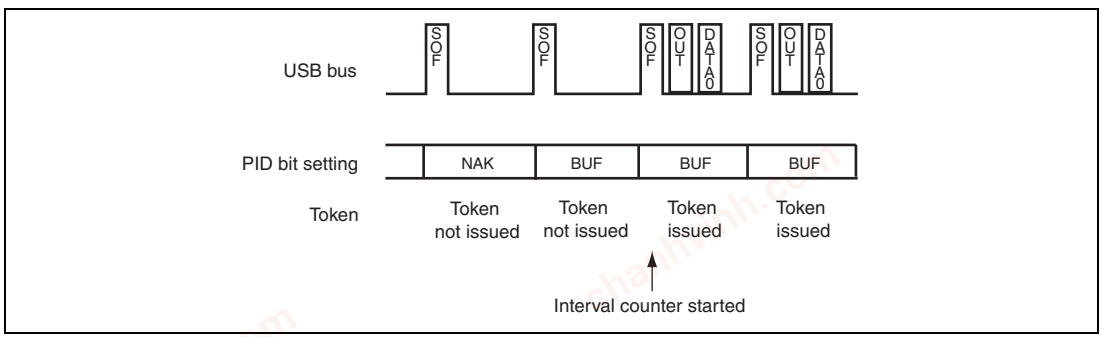

Figure 29.16 Token Issuance when IITV = 0

chanhvinh.com

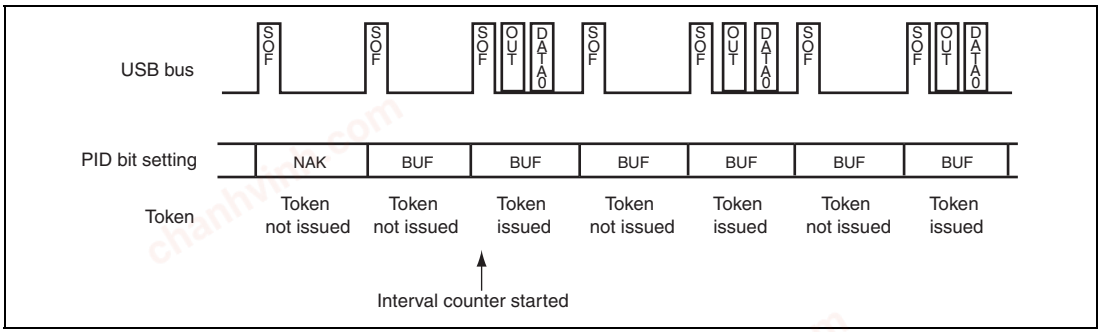

Figure 29.17 Token Issuance when IITV = 1

When the selected pipe is for isochronous transfers, this module carries out the operation below in addition to controlling token issuance interval. This module issues a token even when the NRDY interrupt generation condition is satisfied.

- When the selected pipe is for isochronous IN transfers

  This module generates the NRDY interrupt when this module issues the IN token but does not receive a packet successfully from a peripheral device (no response or packet error).
  This module sets the OVRN bit to 1 generating the NRDY interrupt when the time to issue an IN token comes in a state in which this module cannot receive data because the FIFO buffer is full (because data is read from the FIFO buffer too late).
- When the selected pipe is for isochronous OUT transfers

  This module sets the OVRN bit to 1 generating the NRDY interrupt and transmitting a zero-length packet when the time to issue an OUT token comes in a state in which there is no data to be transmitted in the FIFO buffer (because data is written to the FIFO buffer too late).
  The token issuance interval is reset when a power-on reset is applied or the ACLRM bit is set to 1.

chanhvinh.com

(c) Interval Counting and Transfer Control when the Function Controller Function is Selected

- When the selected pipe is for isochronous OUT transfers

  This module generates the NRDY interrupt when this module fails to receive a data packet within the interval set by the IITV bits in terms of (μ) frames.

  This module generates the NRDY interrupt when this module fails to receive a data packet because of a CRC error or other errors contained in the packet, or because of the FIFO buffer being full.

  This module generates the NRDY interrupt on receiving an SOF packet. Even if the SOF packet is corrupted, the internal interpolation is used and allows the interrupt to be generated at the timing to receive the SOF packet.

  However, when the IITV bits are set to the value other than 0, this module generates the NRDY interrupt on receiving an SOF packet for every interval after starting interval counting operation. When the PID bits are set to NAK after starting the interval timer, this module does not generate the NRDY interrupt on receiving an SOF packet.

  The interval counting starts at the different timing depending on the IITV bit setting as follows.

  — When IITV = 0: The interval counting starts at the (μ) frame following the (μ) frame in which the PID bits for the selected pipe has been set to BUF.

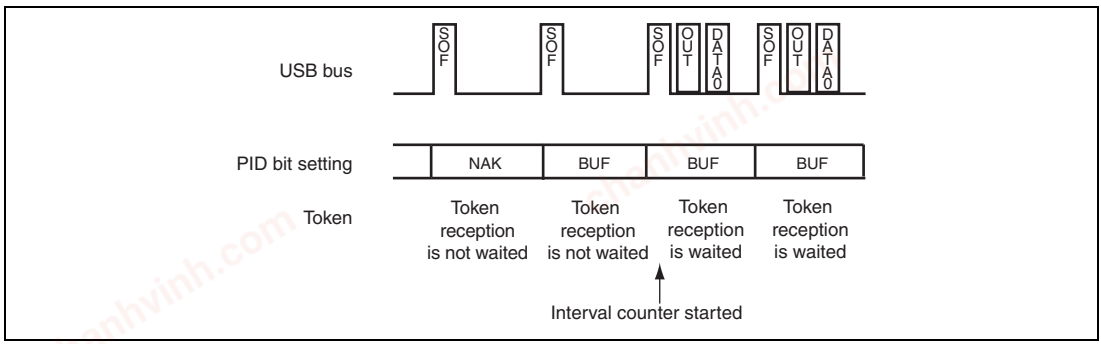

Figure 29.18 Relationship between (μ) Frames and Expected Token Reception when IITV = 0

— When IITV ≠ 0: The interval counting starts on completion of successful reception of the first data packet after the PID bits for the selected pipe have been modified to BUF.

chanhvinh.com

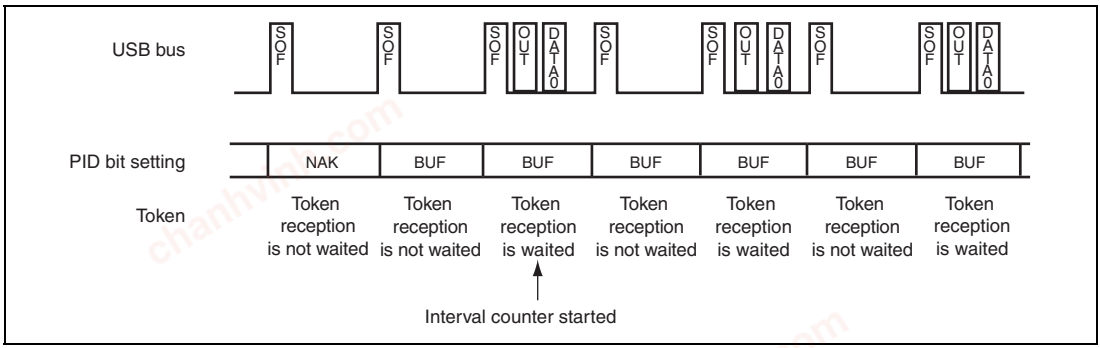

Figure 29.19 Relationship between (μ) Frames and Expected Token Reception when IITV = 1

- When the selected pipe is for isochronous IN transfers

  The IFIS bit should be 1 for this use. When IFIS = 0, this module transmits a data packet in response to the received IN token irrespective of the IITV bit setting.

  When IFIS = 1, this module clears the FIFO buffer when this module fails to receive an IN token within the interval set by the IITV bits in terms of (μ) frames in a state in which there is data to be transmitted in the FIFO buffer.

  This module also clears the FIFO buffer when this module fails to receive an IN token successfully because of a bus error such as a CRC error contained in the token.

  This module clears the FIFO buffer on receiving an SOF packet. Even if the SOF packet is corrupted, the internal interpolation is used and allows the FIFO buffer to be cleared at the timing to receive the SOF packet.

  The interval counting starts at the different timing depending on the IITV bit setting (similar to the timing during OUT transfers).

  The interval count clearing condition is any of the following in function controller mode.

  — When a power-on reset is applied.

  — When the ACLRM bit is set to 1.

  — When this module detects a USB bus reset.

chanhvinh.com

(4) Setup of Data to be Transmitted using Isochronous Transfer when the Function Controller Function is Selected

With isochronous data transmission using this module in function controller function, after data has been written to the buffer memory, a data packet can be sent with the next frame in which an SOF packet is detected. This function is called the isochronous transfer transmission data setup function, and it makes it possible to designate the frame from which transmission began.

If a double buffer is used for the buffer memory, transmission will be enabled for only one of the two buffers even after the writing of data to both buffers has been completed, that buffer memory being the one to which the data writing was completed first. For this reason, even if multiple IN tokens are received, the only buffer memory that can be sent is one packet's worth of data.

When an IN token is received, if the buffer memory is in the transmission enabled state, this module transmits the data. If the buffer memory is not in the transmission enabled state, however, a zero-length packet is sent and an underrun error occurs.

Figure 29.20 shows an example of transmission using the isochronous transfer transmission data setup function with this module, when IITV = 0 (every frame) has been set.

chanhvinh.com

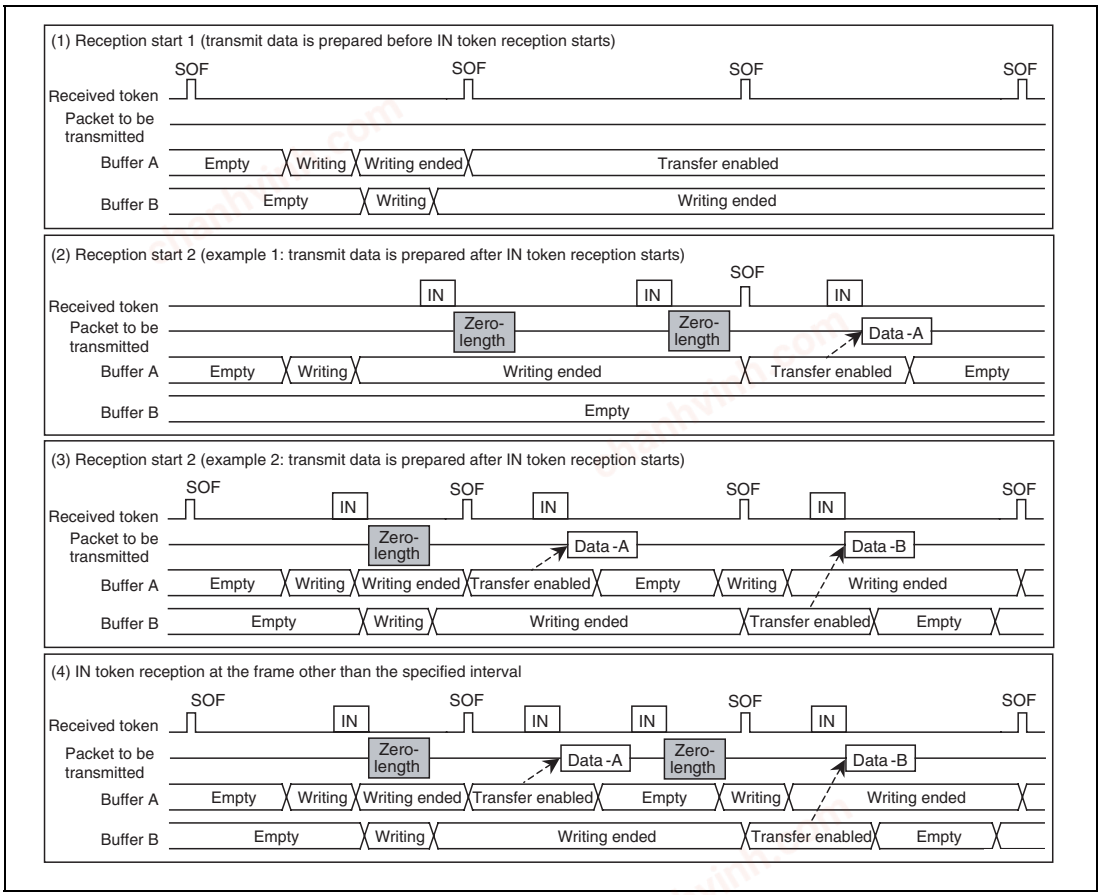

Figure 29.20 Example of Data Setup Function Operation

(5) Isochronous Transfer Transmission Buffer Flush when the Function Controller Function is Selected

If an SOF packet or a μSOF packet is received without receiving an IN token in the interval frame during isochronous data transmission, this module operates as if an IN token had been corrupted, and clears the buffer for which transmission is enabled, putting that buffer in the writing enabled state.

If a double buffer is being used and writing to both buffers has been completed, the buffer memory that was cleared is seen as the data having been sent at the same interval frame, and transmission is enabled for the buffer memory that is not discarded with SOF or μSOF packets reception.

chanhvinh.com

The timing at which the operation of the buffer flush function varies depending on the value set for the IITV bit.

- If IITV = 0
  The buffer flush operation starts from the next frame after the pipe becomes valid.
- In any cases other than IITV = 0
  The buffer flush operation is carried out subsequent to the first normal transaction.

Figure 29.21 shows an example of the buffer flush function of this module. When an unanticipated token is received prior to the interval frame, this module sends the written data or a zero-length packet according to the buffer state.

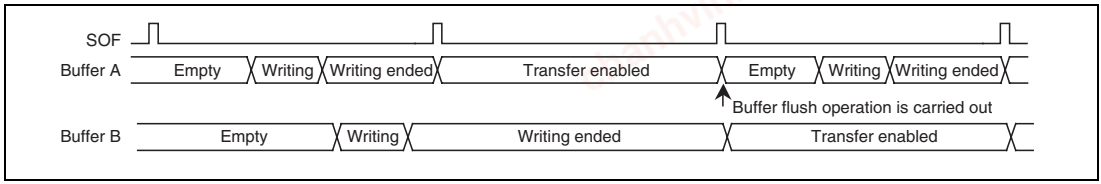

Figure 29.21 Example of Buffer Flush Function Operation

Figure 29.22 shows an example of this module generating an interval error. There are five types of interval errors, as shown below. The interval error is generated at the timing indicated by (1) in the figure, and the IN buffer flush function is activated.

If an interval error occurs during an IN transfers, the buffer flush function is activated; and if it occurs during an OUT transfer, an NRDY interrupt is generated.

The OVRN bit should be used to distinguish between NRDY interrupts such as received packet errors and overrun errors.

In response to tokens that are shaded in the figure, responses occur based on the buffer memory status.

1. IN direction:
   — If the buffer is in the transmission enabled state, the data is transferred as a normal response.
   — If the buffer is in the transmission disabled state, a zero-length packet is sent and an underrun error occurs.
2. OUT direction:
   — If the buffer is in the reception enabled state, the data is received as a normal response.
   — If the buffer is in the reception disabled state, the data is discarded and an overrun error occurs.

chanhvinh.com

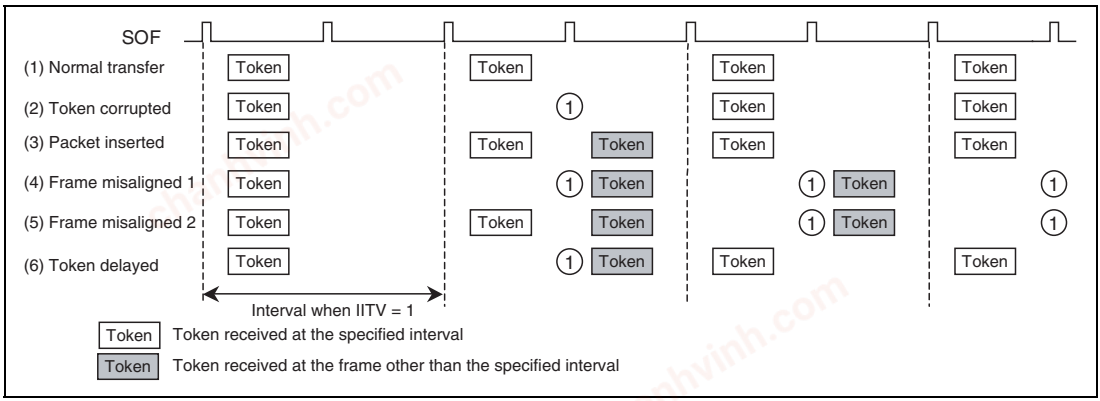

Figure 29.22 Example of an Interval Error Being Generated when IITV = 1

29.4.9 SOF Interpolation Function

When the function controller function is selected and if data could not be received at intervals of 1 ms (when using full-speed operation) or 125 µs (when using high-speed operation) because an SOF packet was corrupted or missing, this module interpolates the SOF. The SOF interpolation operation begins when the USBE and SCKE bits in SYSCFG have been set to 1 and an SOF packet is received. The interpolation function is initialized under the following conditions.

- Power-on reset
- USB bus reset
- Suspended state detected

Also, the SOF interpolation operates under the following specifications.

- 125 µs/1 ms conforms to the results of the reset handshake protocol.
- The interpolation function is not activated until an SOF packet is received.
- After the first SOF packet is received, either 125 µs or 1 ms is counted with an internal clock of 48 MHz, and interpolation is carried out.
- After the second and subsequent SOF packets are received, interpolation is carried out at the previous reception interval.
- Interpolation is not carried out in the suspended state or while a USB bus reset is being received. (With suspended transitions in high-speed operation, interpolation continues for 3 ms after the last packet is received.)

This module supports the following functions based on the SOF detection. These functions also operate normally with SOF interpolation, if the SOF packet was corrupted.

chanhvinh.com

- Refreshing of the frame number and the micro-frame number
- SOFR interrupt and µSOF lock
- Isochronous transfer interval count

If an SOF packet is missing when full-speed operation is being used, the FRNM bit in FRMNUM is not refreshed. If a µSOF packet is missing during high-speed operation, the UFRNM bit in UFRMNUM is refreshed. However, if a µSOF packet for which the UFRNM = 000 is missing, the FRNM bit is not refreshed. In this case, the FRNM bit is not refreshed even if successive µSOF packets other than UFRNM = 000 are received normally.

29.4.10 Pipe Schedule

(1) Conditions for Generating a Transaction

When the host controller function is selected and UACT has been set to 1, this module generates a transaction under the conditions noted in table 29.30.

Table 29.30 Conditions for Generating a Transaction

	Conditions for Generation				
Transaction	**DIR**	**PID**	**IITV0**	**Buffer State**	**SUREQ**
Setup	—*1	—*1	—*1	—*1	1 setting
Control transfer data stage, status stage, bulk transfer	IN	BUF	Invalid	Receive area exists	—*1
	OUT	BUF	Invalid	Send data exists	—*1
Interrupt transfer	IN	BUF	Valid	Receive area exists	—*1
	OUT	BUF	Valid	Send data exists	—*1
Isochronous transfer	IN	BUF	Valid	*2	—*1
	OUT	BUF	Valid	*3	—*1

Notes: 1. Symbols (—) in the table indicate that the condition is one that is unrelated to the generating of tokens. "Valid" indicates that, for interrupt transfers and isochronous transfers, the condition is generated only in transfer frames that are based on the interval counter. "Invalid" indicates that the condition is generated regardless of the interval counter.

2. This indicates that a transaction is generated regardless of whether or not there is a receive area. If there was no receive area, however, the received data is destroyed.

3. This indicates that a transaction is generated regardless of whether or not there is any data to be sent. If there was no data to be sent, however, a zero-length packet is sent.

chanhvinh.com

(2) Transfer Schedule

This section describes the transfer scheduling within a frame of this module. After the module sends an SOF, the transfer is carried out in the sequence described below.

1. Execution of periodic transfers
   A pipe is searched in the order of Pipe 1 → Pipe 2 → Pipe 6 → Pipe 7 → Pipe 8 → Pipe 9, and then, if the pipe is one for which an isochronous or interrupt transfer transaction can be generated, the transaction is generated.
2. Setup transactions for control transfers
   The DCP is checked, and if a setup transaction is possible, it is sent.
3. Execution of bulk and control transfer data stages and status stages
   A pipe is searched in the order of DCP → Pipe 1 → Pipe 2 → Pipe 3 → Pipe 4 → Pipe 5, and then, if the pipe is one for which a bulk or control transfer data stage or a control transfer status stage transaction can be generated, the transaction is generated.
   If a transfer is generated, processing moves to the next pipe transaction regardless of whether the response from the peripheral device is ACK or NAK. Also, if there is time for the transfer to be done within the frame, step 3 is repeated.

(3) USB Communication Enabled

Setting the UACT bit of the DVSTCTR register to 1 initiates sending of an SOF or μSOF, and makes it possible to generate a transaction.

Setting the UACT bit to 0 stops the sending of the SOF or μSOF and initiates a suspend state. If the setting of the UACT bit is changed from 1 to 0, processing stops after the next SOF or μSOF is sent.

chanhvinh.com

29.5 Usage Notes

29.5.1 Power Supply for USB Transceiver

- Set the voltage level of power supply $USBAV_{CC}$, $USBDV_{CC}$*, and $USBUV_{CC}$* to the same as V_{CC}.
- Set the voltage level of power supply $USBAPV_{CC}$ and $USBDPV_{CC}$* to the same as PV_{CC}.
- Set the voltage level of ground $USBAV_{SS}$*, $USBDV_{SS}$*, $USBUV_{SS}$*, $USBAPV_{SS}$*, and $USBDPV_{SS}$* to the same as V_{SS}.
- Separate analog power supplies $USBAV_{CC}$, $USBAV_{SS}$*, $USBAPV_{CC}$, and $USBAPV_{SS}$* from the digital power supplies.

Note: * SH7269 (BGA) Group products do not have this pin.

chanhvinh.com

chanhvinh.com
chanhvinh.com
chanhvinh.com

chanhvinh.com

Section 30 Digital Video Decoder

30.1 Features

The digital video decoder consists of an A/D converter for video signal input, a sync separator circuit, a burst controlled oscillator (BCO), a 2D Y/C separator circuit, chroma decoding circuit, a digital clamp circuit, and an output gain adjustment circuit. Table 30.1 shows the digital video decoder functions.

Table 30.1 Digital Video Decoder Functions

Item	Function
Input signal	Video signal • Composite video signal (CVBS)
Functional outline	• A/D converter for video signal input — VIN1 and VIN2 pin input selection — Sync tip clamp — Programmable gain amplifier (PGA) (1.835 to 8.023 dB) — 10-bit precision pipelined A/D converter • Sync separation — Noise reduction LPS, auto level control sync slicer, horizontal auto frequency control (AFC), vertical count-down, interlace detection, auto gain control (AGC)/peak limiter control • Burst controlled oscillator (BCO) — Color sub-carrier reproduction, color system detection (For details, see table 30.3.) • Y/C separation (For details, see table 30.2.) — NTSC 2D, PAL 2D, SECAM 1D • Chroma decoding — Supporting NTSC, PAL SECAM — Color killer, auto color control (ACC), TINT correction, R-Y axis correction • Digital clamp — Pedestal clamp (Y), center clamp (Cb/Cr), noise detection • Output gain adjustment — Contrast adjustment: 0 to approx. two times — Color adjustment (Cb/Cr independent): 0 to approx. two times

chanhvinh.com

Table 30.2 Supported Y/C Separation Operation

Color System	Y/C Separation Operation
NTSC-3.58	Two dimensional
NTSC-4.43	Two dimensional
PAL-M	Two dimensional
PAL-N	Two dimensional
PAL-4.43	Two dimensional
SECAM	One dimensional

Table 30.3 Color System Detection

COLORSY[1:0]	FSCMODE	FVMODE	Detection Result
0: NTSC	0: 358 MHz	Don't care	NTSC-M
0: NTSC	1: 4.43 MHz	Don't care	NTSC-4.43
1: PAL	0: 358 MHz	0: 50 Hz	PAL-N
1: PAL	0: 358 MHz	1: 60 Hz	PAL-M
1: PAL	1: 4.43 MHz	0: 50 Hz	PAL-B, H, I, G, D
1: PAL	1: 4.43 MHz	1: 60 Hz	PAL-60
2: SECAM	—	—	SECAM
3: Unknown	—	—	Cannot be detected

chanhvinh.com

30.2 Block Diagram

Figure 30.1 shows a block diagram of this module.

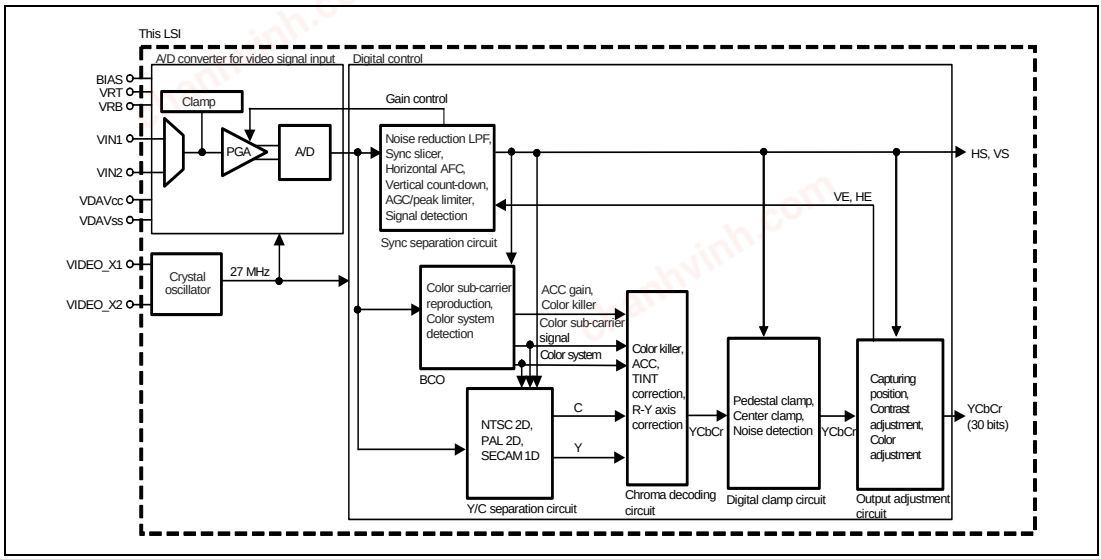

Figure 30.1 Block Diagram

chanhvinh.com

30.3 Input/Output Pins

Table 30.4 shows the pin configuration.

Table 30.4 Pin Configuration

Category	Name	Pin Symbol	I/O	Description
Signal	Composite video signal input	VIN1	Input	Composite video signal (CVBS) input pin 1
		VIN2	Input	Composite video signal (CVBS) input pin 2
Clock	Crystal oscillator /external clock	VIDEO_X1	Input	Connect to a crystal resonator for the digital video decoder. The VIDEO_X1 pin can also be used for external clock input.
		VIDEO_X2	Output	
Reference voltage	TOP reference voltage	VRT	Output	TOP reference voltage pin for the A/D converter for video signal input Connect to the VDAVss via a 0.1-μF capacitor.
	BOTTOM reference voltage	VRB	Output	BOTTOM reference voltage pin for the A/D converter for video signal input Connect to the VDAVss via a 0.1-μF capacitor.
	Reference voltage	BIAS	Output	Reference voltage pin for the A/D converter for video signal input Connect to the VDAVss via a 24-kΩ ±1% resistor.
Power supply	Analog power supply	VDAVcc	Input	Power supply pin for the A/D converter for video signal input
	Analog ground	VDAVss	Input	Ground pin for the A/D converter for video signal input

chanhvinh.com

30.4 Register Descriptions

Table 30.5 shows the register configuration.

Table 30.5 Register Configuration

Register Name	Abbreviation	R/W	Address	Access Size
ADC control register 1	ADCCR1	R/W	H'FFFFA008	16
Timing generation control register 1	TGCR1	R/W	H'FFFFA00E	16
Timing generation control register 2	TGCR2	R/W	H'FFFFA010	16
Timing generation control register 3	TGCR3	R/W	H'FFFFA012	16
Sync separation control register 1	SYNSCR1	R/W	H'FFFFA01A	16
Sync separation control register 2	SYNSCR2	R/W	H'FFFFA01C	16
Sync separation control register 3	SYNSCR3	R/W	H'FFFFA01E	16
Sync separation control register 4	SYNSCR4	R/W	H'FFFFA020	16
Sync separation control register 5	SYNSCR5	R/W	H'FFFFA022	16
Horizontal AFC control register 1	HAFCCR1	R/W	H'FFFFA024	16
Horizontal AFC control register 2	HAFCCR2	R/W	H'FFFFA026	16
Horizontal AFC control register 3	HAFCCR3	R/W	H'FFFFA028	16
Vertical countdown control register 1	VCDWCR1	R/W	H'FFFFA02A	16
Digital clamp control register 1	DCPCR1	R/W	H'FFFFA030	16
Digital clamp control register 2	DCPCR2	R/W	H'FFFFA032	16
Digital clamp control register 3	DCPCR3	R/W	H'FFFFA034	16
Digital clamp control register 4	DCPCR4	R/W	H'FFFFA036	16
Digital clamp control register 5	DCPCR5	R/W	H'FFFFA038	16
Digital clamp control register 6	DCPCR6	R/W	H'FFFFA03A	16
Digital clamp control register 7	DCPCR7	R/W	H'FFFFA03C	16
Digital clamp control register 8	DCPCR8	R/W	H'FFFFA03E	16
Noise detection control register	NSDCR	R/W	H'FFFFA040	16
Burst lock/chroma decoding control register	BTLCR	R/W	H'FFFFA042	16
Burst gate pulse control register	BTGPCR	R/W	H'FFFFA044	16
ACC control register 1	ACCCR1	R/W	H'FFFFA046	16
ACC control register 2	ACCCR2	R/W	H'FFFFA048	16
ACC control register 3	ACCCR3	R/W	H'FFFFA04A	16

chanhvinh.com

Register Name	Abbreviation	R/W	Address	Access Size
TINT control register	TINTCR	R/W	H'FFFFA04C	16
Y/C delay/chroma decoding control register	YCDCR	R/W	H'FFFFA04E	16
AGC control register 1	AGCCR1	R/W	H'FFFFA050	16
AGC control register 2	AGCCR2	R/W	H'FFFFA052	16
Peak limiter control register	PKLIMITCR	R/W	H'FFFFA054	16
Over-range control register 1	RGORCR1	R/W	H'FFFFA056	16
Over-range control register 2	RGORCR2	R/W	H'FFFFA058	16
Over-range control register 3	RGORCR3	R/W	H'FFFFA05A	16
Over-range control register 4	RGORCR4	R/W	H'FFFFA05C	16
Over-range control register 5	RGORCR5	R/W	H'FFFFA05E	16
Over-range control register 6	RGORCR6	R/W	H'FFFFA060	16
Over-range control register 7	RGORCR7	R/W	H'FFFFA062	16
Feedback control register for horizontal AFC phase comparator	AFCPFCR	R/W	H'FFFFA07C	16
Register update enable register	RUPDCR	R/W	H'FFFFA07E	16
Sync separation status/vertical cycle read register	VSYNCSR	R	H'FFFFA080	16
Horizontal cycle read register	HSYNCSR	R	H'FFFFA082	16
Digital clamp read register 1	DCPSR1	R	H'FFFFA084	16
Digital clamp read register 2	DCPSR2	R	H'FFFFA086	16
Noise detection read register	NSDSR	R	H'FFFFA08C	16
Chroma decoding read register 1	CROMASR1	R	H'FFFFA08E	16
Chroma decoding read register 2	CROMASR2	R	H'FFFFA090	16
Sync separation read register	SYNCSSR	R	H'FFFFA092	16
AGC control read register 1	AGCCSR1	R	H'FFFFA094	16
AGC control read register 2	AGCCSR2	R	H'FFFFA096	16
Y/C separation control register 3	YCSCR3	R/W	H'FFFFA104	16
Y/C separation control register 4	YCSCR4	R/W	H'FFFFA106	16
Y/C separation control register 5	YCSCR5	R/W	H'FFFFA108	16
Y/C separation control register 6	YCSCR6	R/W	H'FFFFA10A	16
Y/C separation control register 7	YCSCR7	R/W	H'FFFFA10C	16
Y/C separation control register 8	YCSCR8	R/W	H'FFFFA10E	16

chanhvinh.com

Register Name	Abbreviation	R/W	Address	Access Size
Y/C separation control register 9	YCSCR9	R/W	H'FFFFA110	16
Y/C separation control register 11	YCSCR11	R/W	H'FFFFA114	16
Y/C separation control register 12	YCSCR12	R/W	H'FFFFA116	16
Digital clamp control register 9	DCPCR9	R/W	H'FFFFA180	16
Chroma filter TAP coefficient (WA_F0) register for Y/C separation	YCTWA_F0	R/W	H'FFFFA192	16
Chroma filter TAP coefficient (WA_F1) register for Y/C separation	YCTWA_F1	R/W	H'FFFFA194	16
Chroma filter TAP coefficient (WA_F2) register for Y/C separation	YCTWA_F2	R/W	H'FFFFA196	16
Chroma filter TAP coefficient (WA_F3) register for Y/C separation	YCTWA_F3	R/W	H'FFFFA198	16
Chroma filter TAP coefficient (WA_F4) register for Y/C separation	YCTWA_F4	R/W	H'FFFFA19A	16
Chroma filter TAP coefficient (WA_F5) register for Y/C separation	YCTWA_F5	R/W	H'FFFFA19C	16
Chroma filter TAP coefficient (WA_F6) register for Y/C separation	YCTWA_F6	R/W	H'FFFFA19E	16
Chroma filter TAP coefficient (WA_F7) register for Y/C separation	YCTWA_F7	R/W	H'FFFFA1A0	16
Chroma filter TAP coefficient (WA_F8) register for Y/C separation	YCTWA_F8	R/W	H'FFFFA1A2	16
Chroma filter TAP coefficient (WB_F0) register for Y/C separation	YCTWB_F0	R/W	H'FFFFA1A4	16
Chroma filter TAP coefficient (WB_F1) register for Y/C separation	YCTWB_F1	R/W	H'FFFFA1A6	16
Chroma filter TAP coefficient (WB_F2) register for Y/C separation	YCTWB_F2	R/W	H'FFFFA1A8	16
Chroma filter TAP coefficient (WB_F3) register for Y/C separation	YCTWB_F3	R/W	H'FFFFA1AA	16
Chroma filter TAP coefficient (WB_F4) register for Y/C separation	YCTWB_F4	R/W	H'FFFFA1AC	16
Chroma filter TAP coefficient (WB_F5) register for Y/C separation	YCTWB_F5	R/W	H'FFFFA1AE	16
Chroma filter TAP coefficient (WB_F6) register for Y/C separation	YCTWB_F6	R/W	H'FFFFA1B0	16

chanhvinh.com

Register Name	Abbreviation	R/W	Address	Access Size
Chroma filter TAP coefficient (WB_F7) register for Y/C separation	YCTWB_F7	R/W	H'FFFFA1B2	16
Chroma filter TAP coefficient (WB_F8) register for Y/C separation	YCTWB_F8	R/W	H'FFFFA1B4	16
Chroma filter TAP coefficient (NA_F0) register for Y/C separation	YCTNA_F0	R/W	H'FFFFA1B6	16
Chroma filter TAP coefficient (NA_F1) register for Y/C separation	YCTNA_F1	R/W	H'FFFFA1B8	16
Chroma filter TAP coefficient (NA_F2) register for Y/C separation	YCTNA_F2	R/W	H'FFFFA1BA	16
Chroma filter TAP coefficient (NA_F3) register for Y/C separation	YCTNA_F3	R/W	H'FFFFA1BC	16
Chroma filter TAP coefficient (NA_F4) register for Y/C separation	YCTNA_F4	R/W	H'FFFFA1BE	16
Chroma filter TAP coefficient (NA_F5) register for Y/C separation	YCTNA_F5	R/W	H'FFFFA1C0	16
Chroma filter TAP coefficient (NA_F6) register for Y/C separation	YCTNA_F6	R/W	H'FFFFA1C2	16
Chroma filter TAP coefficient (NA_F7) register for Y/C separation	YCTNA_F7	R/W	H'FFFFA1C4	16
Chroma filter TAP coefficient (NA_F8) register for Y/C separation	YCTNA_F8	R/W	H'FFFFA1C6	16
Chroma filter TAP coefficient (NB_F0) register for Y/C separation	YCTNB_F0	R/W	H'FFFFA1C8	16
Chroma filter TAP coefficient (NB_F1) register for Y/C separation	YCTNB_F1	R/W	H'FFFFA1CA	16
Chroma filter TAP coefficient (NB_F2) register for Y/C separation	YCTNB_F2	R/W	H'FFFFA1CC	16
Chroma filter TAP coefficient (NB_F3) register for Y/C separation	YCTNB_F3	R/W	H'FFFFA1CE	16
Chroma filter TAP coefficient (NB_F4) register for Y/C separation	YCTNB_F4	R/W	H'FFFFA1D0	16
Chroma filter TAP coefficient (NB_F5) register for Y/C separation	YCTNB_F5	R/W	H'FFFFA1D2	16
Chroma filter TAP coefficient (NB_F6) register for Y/C separation	YCTNB_F6	R/W	H'FFFFA1D4	16

chanhvinh.com

Register Name	Abbreviation	R/W	Address	Access Size
Chroma filter TAP coefficient (NB_F7) register for Y/C separation	YCTNB_F7	R/W	H'FFFFA1D6	16
Chroma filter TAP coefficient (NB_F8) register for Y/C separation	YCTNB_F8	R/W	H'FFFFA1D8	16
Luminance (Y) signal gain control register	YGAINCR	R/W	H'FFFFA200	16
Color difference (Cb) signal gain control register	CBGAINCR	R/W	H'FFFFA202	16
Color difference (Cr) signal gain control register	CRGAINCR	R/W	H'FFFFA204	16
PGA register update	PGA_UPDATE	R/W	H'FFFFA280	16
PGA control register	PGACR	R/W	H'FFFFA282	16
ADC control register 2	ADCCR2	R/W	H'FFFFA284	16

chanhvinh.com

30.4.1 ADC Control Register 1 (ADCCR1)

Bit:	15	14	13	12	11	10	9	8	7	6	5	4	3	2	1	0
	—	—	—	—	—	—	—	AGC MODE	—	—	—	—	—	—	—	—
Initial value:	0	0	0	0	0	0	0	0	0	0	0	0	0	0	0	0
R/W:	R	R	R	R	R	R	R	R/W	R	R	R	R	R	R	R	R

Bit	Bit Name	Initial Value	R/W	Description
15 to 9	—	All 0	R	Reserved These bits are always read as 0. The write value should always be 0.
8	AGCMODE	0	R/W	A/D Converter AGC ON/OFF Control 0: AGC OFF 1: AGC ON
7 to 0	—	All 0	R	Reserved These bits are always read as 0. The write value should always be 0.

(1) AGC Control

The AGCMODE bit controls the AGC ON/OFF. When AGCMODE is 1, the AGC operation is performed by detecting the sync amplitude and video peak amplitude and controlling the PGA gain of the ADC.

When PGACR.PGA_GAIN_SEL is 1, the PGA gain can be directly controlled with the PGACR.PGA_GAIN value. At this time, the AGCMODE setting is invalid.

Setting AGCMODE to 0 and PGACR.PGA_GAIN_SEL to 0 simultaneously is prohibited.

chanhvinh.com

30.4.2 Timing Generation Control Register 1 (TGCR1)

Bit:	15	14	13	12	11	10	9	8	7	6	5	4	3	2	1	0
	—	—	—	—	—	—	—	SRCLEFT[8:0]								
Initial value:	0	0	0	0	0	0	0	1	0	0	1	1	1	1	0	0
R/W:	R	R	R	R	R	R	R	R/W	R/W	R/W	R/W	R/W	R/W	R/W	R/W	R/W

Bit	Bit Name	Initial Value	R/W	Description
15 to 9	—	All 0	R	Reserved These bits are always read as 0. The write value should always be 0.
8 to 0	SRCLEFT [8:0]	H'13C	R/W	Left End of Input Video Signal Capturing Area Set the position from the horizontal sync reference in 27-MHz clock cycle units.

Note: All the bits in this register are updated when the vertical sync signal is asserted with the NEWSETTING bit in RUPDCR being 1.

(1) Timing Generation (Horizontal Start Position) Control

SRCLEFT sets the start position of the horizontal enable signal of the output video signal from the horizontal sync reference in 27-MHz clock cycle units.

chanhvinh.com

30.4.3 Timing Generation Control Register 2 (TGCR2)

Bit:	15	14	13	12	11	10	9	8	7	6	5	4	3	2	1	0
	SRCTOP[5:0]						SRCHEIGHT[9:0]									
Initial value:	0	1	0	1	0	0	0	0	1	1	1	0	1	0	0	0
R/W:	R/W	R/W	R/W	R/W	R/W	R/W	R/W	R/W	R/W	R/W	R/W	R/W	R/W	R/W	R/W	R/W

Bit	Bit Name	Initial Value	R/W	Description
15 to 10	SRCTOP [5:0]	H'14	R/W	Top End of Input Video Signal Capturing Area Set the position from the vertical sync reference in one-line units.
9 to 0	SRCHEIGHT [9:0]	H'0E8	R/W	Height of Input Video Signal Capturing Area Set the vertical active period in one-line units.

Note: All the bits in this register are updated when the vertical sync signal is asserted with the NEWSETTING bit in RUPDCR being 1.

(1) Timing Generation (Vertical Start Position) Control

SRCTOP sets the start position of the vertical enable signal of the output video signal from the vertical sync reference in one-line units.

(2) Timing Generation (Vertical Width) Control

SRCHEIGHT sets the height of the vertical enable signal of the output video signal in one-line units.

chanhvinh.com

30.4.4 Timing Generation Control Register 3 (TGCR3)

Bit:	15	14	13	12	11	10	9	8	7	6	5	4	3	2	1	0
	—	—	—	—	—	SRCWIDTH[10:0]										
Initial value:	0	0	0	0	0	1	0	1	0	0	0	0	0	0	0	0
R/W:	R	R	R	R	R	R/W	R/W	R/W	R/W	R/W	R/W	R/W	R/W	R/W	R/W	R/W

Bit	Bit Name	Initial Value	R/W	Description
15 to 11	—	All 0	R	Reserved These bits are always read as 0. The write value should always be 0.
10 to 0	SRCWIDTH [10:0]	H'500	R/W	Width of Input Video Signal Capturing Area Set the horizontal active period in 27-MHz clock cycle units.

Note: All the bits in this register are updated when the vertical sync signal is asserted with the NEWSETTING bit in RUPDCR being 1.

(1) Timing Generation (Horizontal Width) Control

SRCHEIGHT sets the width of horizontal enable signal of the output video signal in 27-MHz clock cycle units.

Figures 30.2 to 30.6 show the timings generated with the NTSC (59.94 Hz) and PAL/SECAM (50.00 Hz) formats.

chanhvinh.com

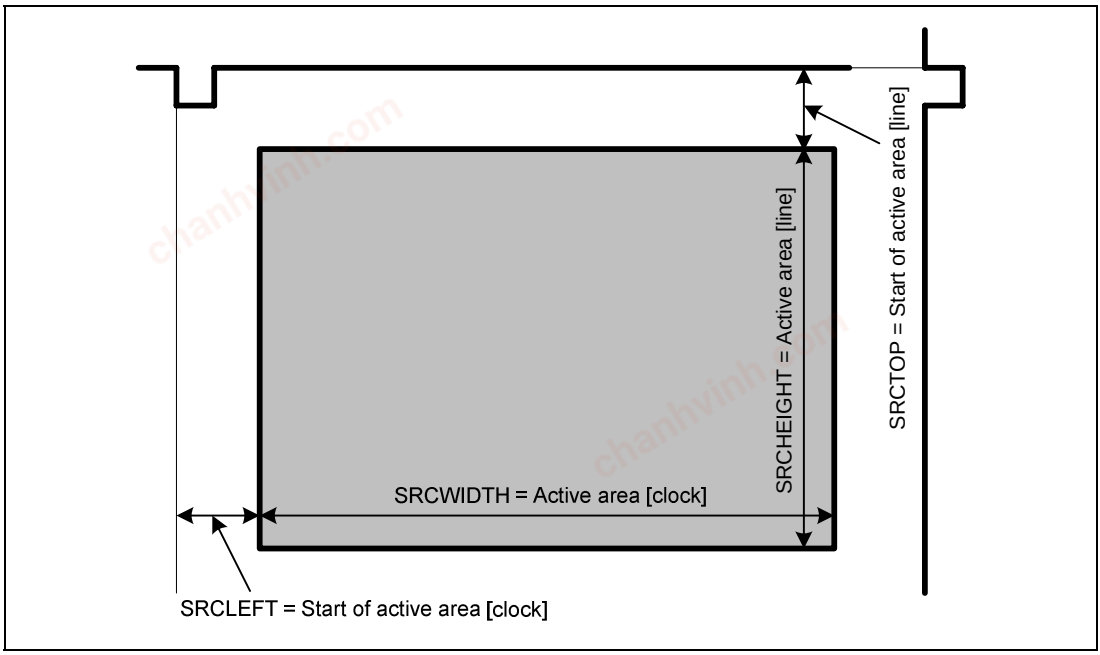

Figure 30.2 Active Image Area Setting

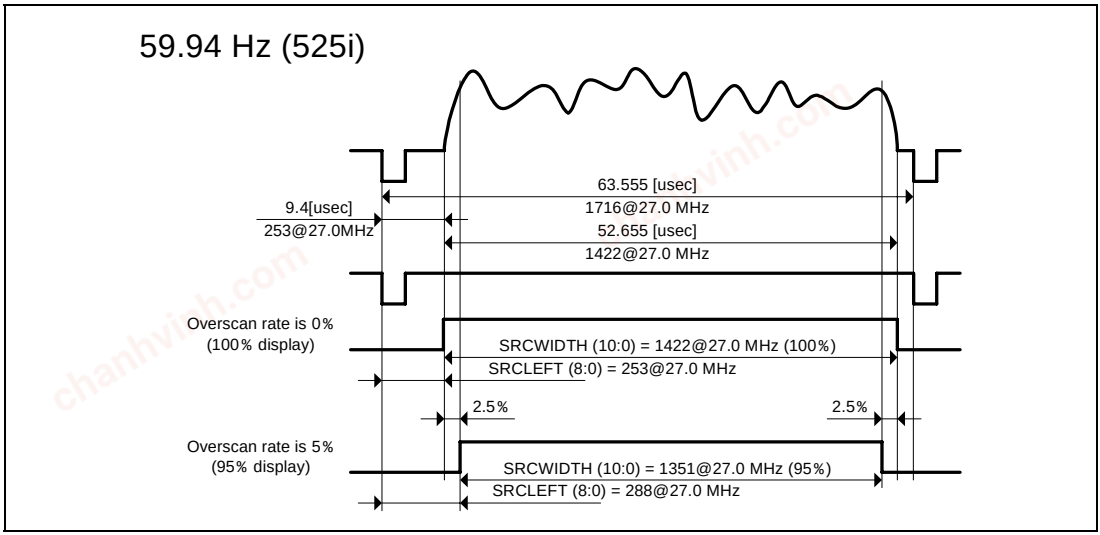

Figure 30.3 Example of Horizontal Active Image Period (59.94 Hz (525i))

chanhvinh.com

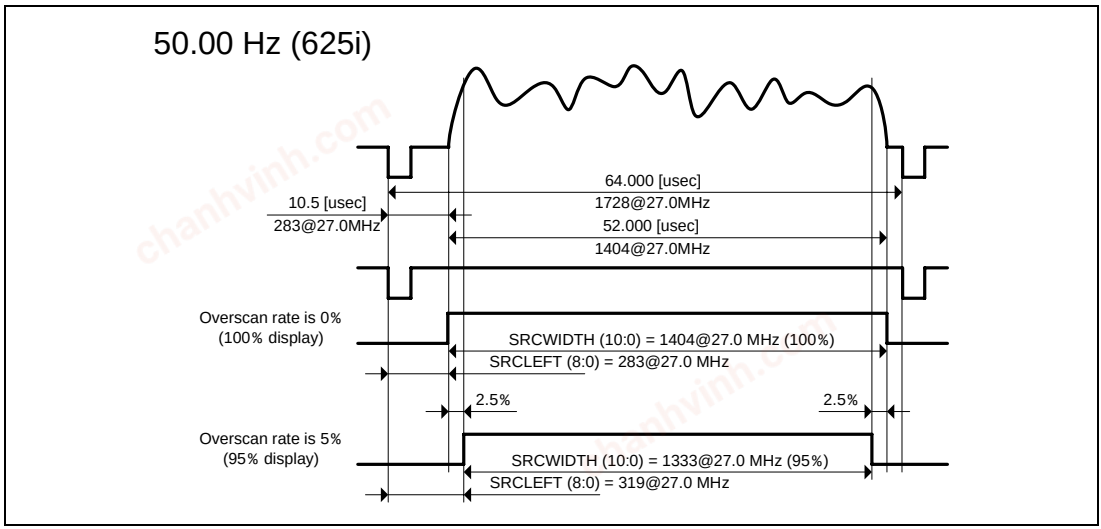

Figure 30.4 Example of Horizontal Active Image Period (50.00 Hz (625i))

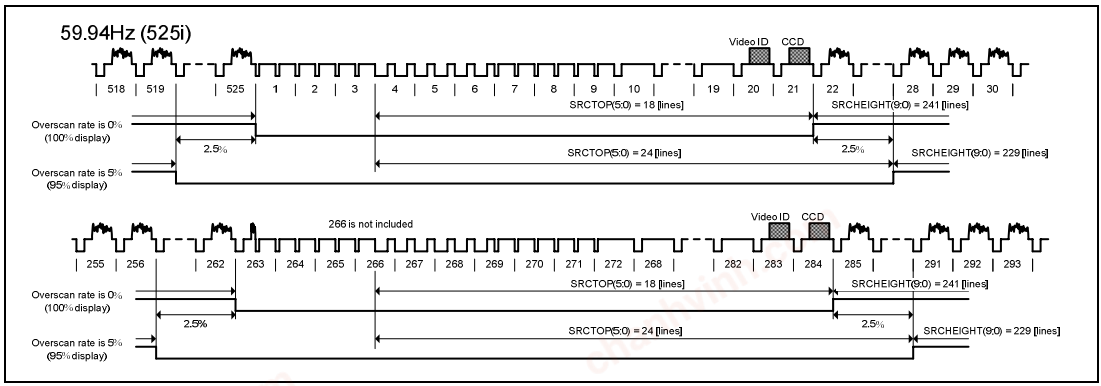

Figure 30.5 Example of Vertical Active Image Period (59.94 Hz (525i))

chanhvinh.com

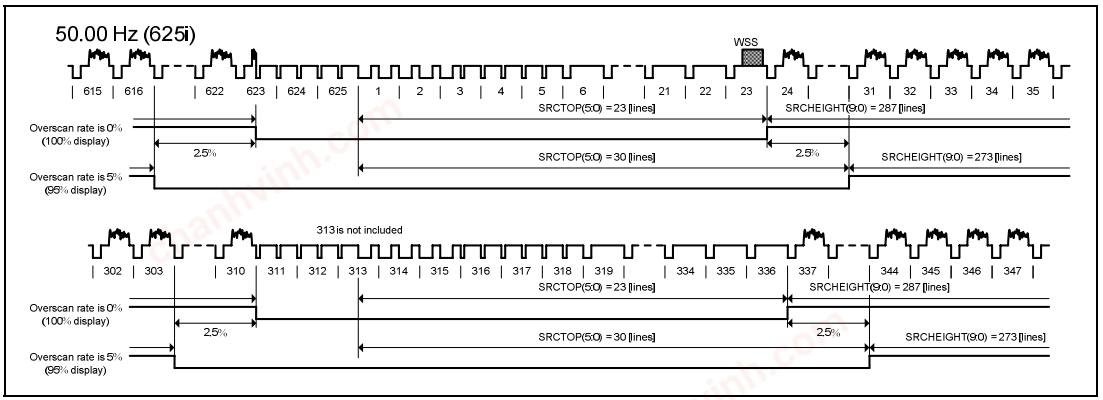

Figure 30.6 Example of Vertical Active Image Period (50.00 Hz (625i))

The active period width should not be larger than necessary.

The settings of TGCR1 to TGCR3 such as valid period setting for the peak limiter are applied only to this module. To set the display size of the input video, SCL0_DS2 and SCL0_DS3 of the video display controller 4 scaler should be used.

chanhvinh.com

30.4.5 Sync Separation Control Register 1 (SYNSCR1)

Bit:	15	14	13	12	11	10	9	8	7	6	5	4	3	2	1	0
	LPFVSYNC[2:0]			LPFHSYNC[2:0]			—	—	VELOCITYSHIFT_H[3:0]				SLICER MODE_H[1:0]		SLICER MODE_V[1:0]	
Initial value:	0	1	1	0	1	1	0	0	0	0	0	0	1	0	1	0
R/W:	R/W	R/W	R/W	R/W	R/W	R/W	R	R	R/W	R/W	R/W	R/W	R/W	R/W	R/W	R/W

Bit	Bit Name	Initial Value	R/W	Description
15 to 13	LPFVSYNC [2:0]	011	R/W	Low-Pass Filter Cutoff Frequency before Vertical Sync Separation 0: None 1: 0.94 MHz 2: 0.67 MHz 3: 0.54 MHz 4: 0.47 MHz 5: 0.34 MHz 6: 0.27 MHz 7: 0.23 MHz
12 to 10	LPFHSYNC [2:0]	011	R/W	Low-Pass Filter Cutoff Frequency before Horizontal Sync Separation 0: None 1: 2.15 MHz 2: 1.88 MHz 3: 1.34 MHz 4: 1.07 MHz 5: 0.94 MHz 6: 0.67 MHz 7: 0.54 MHz
9, 8	—	All 0	R	Reserved These bits are always read as 0. The write value should always be 0.

chanhvinh.com

Bit	Bit Name	Initial Value	R/W	Description
7 to 4	VELOCITYSHIFT_H[3:0]	0000	R/W	Reference Level Operation Speed Control for Composite Sync Separation (for horizontal sync signal) 0: ×1 1: ×2 2: ×4 3: ×8 4: ×16 5: ×32 6: ×64 7: ×128 Others: ×256 Standard speed (×1) ⇔ High speed (×256)
3, 2	SLICERMODE_H[1:0]	10	R/W	Auto-Slice Level Setting for Composite Sync Separator Circuit (for horizontal sync signal) 0: Manual setting by CSYNCSLICE_H 1: 25% of sync depth (Auto) 2: 50% of sync depth (Auto) 3: 75% of sync depth (Auto)
1, 0	SLICERMODE_V[1:0]	10	R/W	Auto-Slice Level Setting for Composite Sync Separation Circuit (for vertical sync signal) 0: Manual setting by CSYNCSLICE_V 1: 25% of sync depth (Auto) 2: 50% of sync depth (Auto) 3: 75% of sync depth (Auto)

chanhvinh.com

(1) Low-Pass Filter Control before Vertical Sync Separation

LPFVSYNC sets the noise reduction low-pass filter for the input video signal fed to a sync separator in order to avoid sync separation error caused by noise. A low-pass filter cutoff frequency should be set not to deteriorate (i.e. to enable to detect) the composite sync signal components.

Table 30.6 Low-Pass Filter Cutoff Frequency before Vertical Sync Separation

	For Vertical Sync Separation	
LPFVSYNC[2:0]	**t**	**fc (MHz)**
1	0.109375	0.939647766
2	0.078125	0.671176976
3	0.0625	0.536941581
4	0.0546875	0.469823883
5	0.0390625	0.335588488
6	0.003125	0.26847079
7	0.0273438	0.234911942

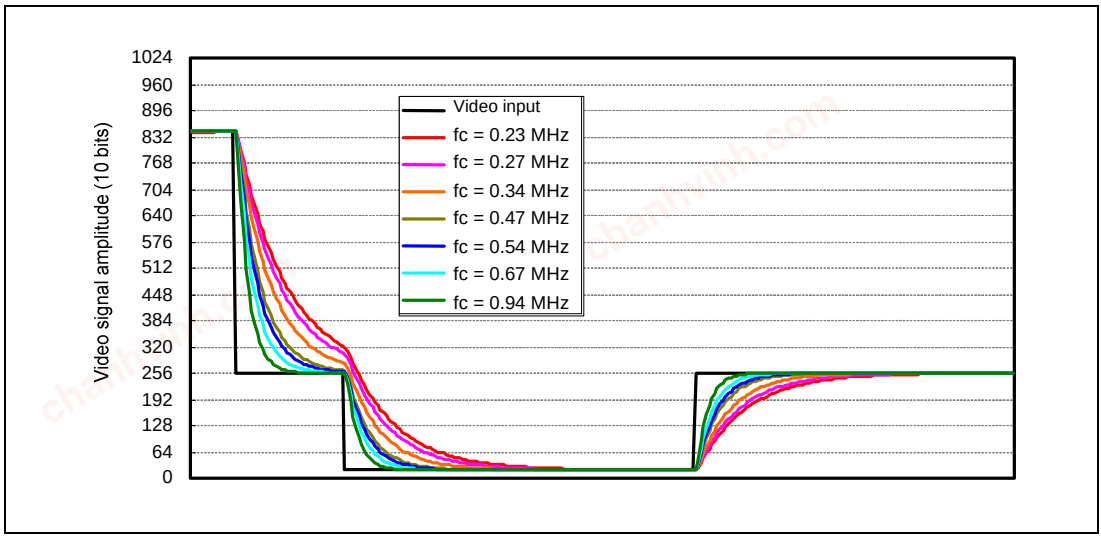

Figure 30.7 Low-Pass Filter Output Waveform Near Horizontal Sync Signal during 100% White Signal Input (Vertical: Pattern Diagram)

chanhvinh.com

(2) Low-Pass Filter Control before Horizontal Sync Separation

LPFHSYNC sets the noise reduction low-pass filter for the input video signal fed to a sync separator in order to avoid sync separation error caused by noise. A low-pass filter cutoff frequency should be set not to deteriorate (i.e. to enable to detect) the composite sync signal components.

Table 30.7 Low-Pass Filter Cutoff Frequency before Horizontal Sync Separation

	For Horizontal Sync Separation	
LPFHSYNC[2:0]	**t**	**fc (MHz)**
1	0.25	2.147766323
2	0.21875	1.879295533
3	0.15625	1.342353952
4	0.125	1.073883162
5	0.10938	0.939647766
6	0.07813	0.671176976
7	0.0625	0.536941581

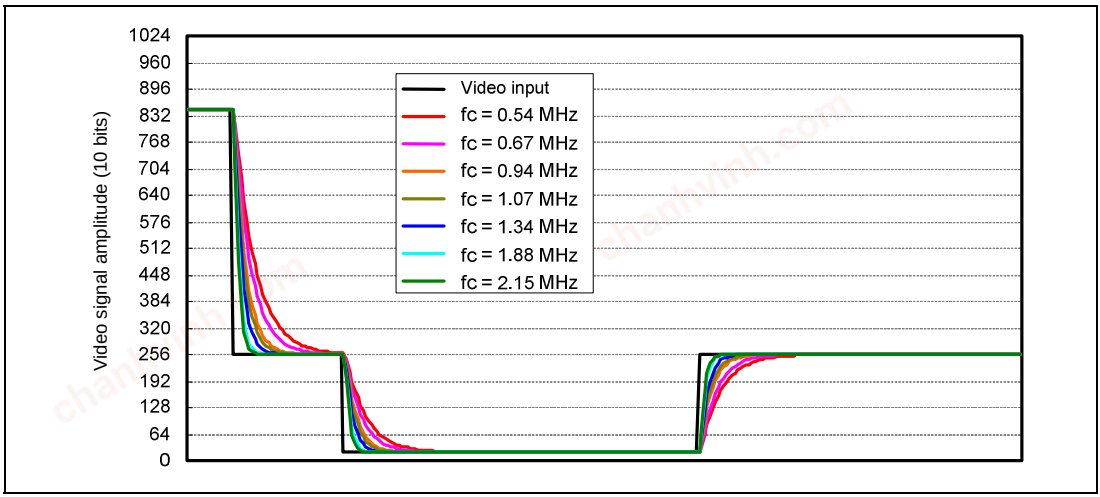

Figure 30.8 Low-Pass Filter Output Waveform Near Vertical Sync Signal during 100% White Signal Input (Horizontal: Pattern Diagram)

chanhvinh.com

(3) Reference Level Operation Speed Control for Sync Separation

VELOCITYSHIFT_H controls the speed for automatically determining the slice level.

If sync skew is caused by sync sag, it can be improved by raising the determination speed using VELOCITYSHIFT_H.

(4) Horizontal Sync Slicer Control

SLICERMODE_H controls composite sync signal separation from the video signals.

The slice level for composite sync signal separation can be set either manually or automatically. When automatic setting is used, the level is automatically set using the sync signal amplitude detection result, which is described later. The sync slicer can be controlled separately for horizontal and vertical sync signals.

(5) Vertical Sync Slicer Control

SLICERMODE_V controls composite sync signal separation from the video signals.

The slice level for composite sync signal separation can be set either manually or automatically. When automatic setting is used, the level is automatically set using the sync signal amplitude detection result, which is described later. The sync slicer can be controlled separately for horizontal and vertical sync signals.

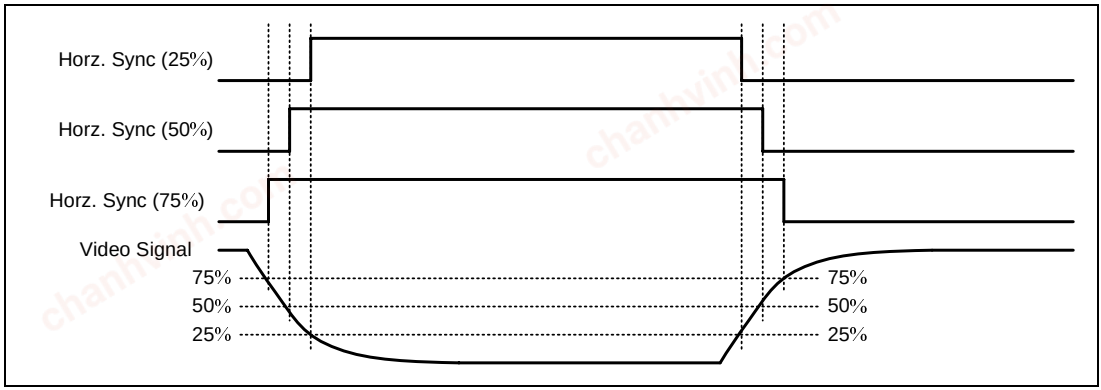

Figure 30.9 Auto Slice Level Setting

chanhvinh.com

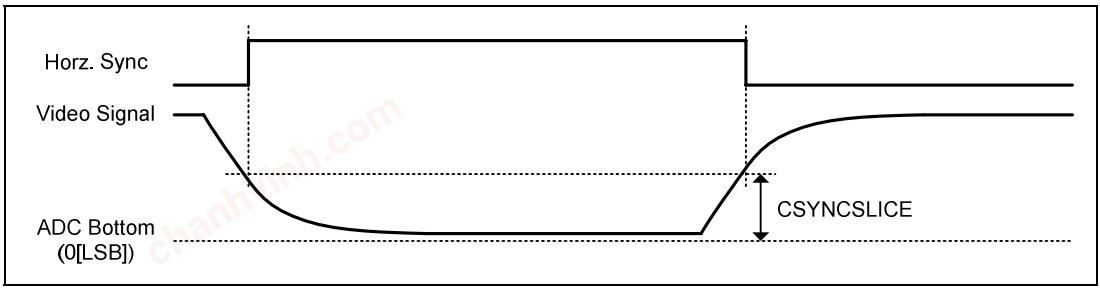

Figure 30.10 Manual Slice Level Setting

chanhvinh.com

30.4.6 Sync Separation Control Register 2 (SYNSCR2)

Bit:	15	14	13	12	11	10	9	8	7	6	5	4	3	2	1	0
	—	—	—	—	SYNCMAXDUTY_H[5:0]						SYNCMINDUTY_H[5:0]					
Initial value:	0	0	0	0	0	0	1	1	1	1	0	0	1	0	1	0
R/W:	R	R	R	R	R/W	R/W	R/W	R/W	R/W	R/W	R/W	R/W	R/W	R/W	R/W	R/W

Bit	Bit Name	Initial Value	R/W	Description
15 to 12	—	All 0	R	Reserved These bits are always read as 0. The write value should always be 0.
11 to 6	SYNCMAXDUTY_H[5:0]	001111	R/W	Max Ratio of Horizontal Cycle to Horizontal Sync Signal Pulse Width Valid when auto slice level setting is active (SLICERMODE_H ≠ 0).
5 to 0	SYNCMINDUTY_H[5:0]	001010	R/W	Min Ratio of Horizontal Cycle to Horizontal Sync Signal Pulse Width Valid when auto slice level setting is active (SLICERMODE_H ≠ 0).

(1) Sync Amplitude Detection Control for Horizontal Sync Separation

SYNCMAXDUTY_H and SYNCMINDUTY_H control the sync signal amplitude detection of composite sync signal included in the video signal.

chanhvinh.com

Table 30.8 Auto Slice Level Register Settings for Composite Sync Separation

	Horizontal Period (µsec)	Horizontal Sync Width (µsec)	Video Active Period (µsec)	Horizontal Blanking Interval (µsec)	SYNCMAXDUTY_H[5:0], SYNCMAXDUTY_V[5:0], Recommended Value	SYNCMINDUTY_H[5:0], SYNCMINDUTY_V[5:0] Recommended Value
525i/ 59.94 Hz	63.56	4.70	52.66	10.90	15	10
625i/ 50 Hz	64.00	4.70	52.00	12.00	15	10

chanhvinh.com

30.4.7 Sync Separation Control Register 3 (SYNSCR3)

Bit:	15	14	13	12	11	10	9	8	7	6	5	4	3	2	1	0
	—	—	SSCLIPSEL[3:0]				CSYNCSLICE_H[9:0]									
Initial value:	0	0	1	1	1	1	0	0	1	0	0	1	0	0	1	0
R/W:	R	R	R/W	R/W	R/W	R/W	R/W	R/W	R/W	R/W	R/W	R/W	R/W	R/W	R/W	R/W

Bit	Bit Name	Initial Value	R/W	Description
15, 14	—	All 0	R	Reserved These bits are always read as 0. The write value should always be 0.
13 to 10	SSCLIPSEL[3:0]	1111	R/W	Clipping Level Clip the video signal supplied to the vertical/horizontal sync separation low-pass filter Bit value = Clipping level (amplitude 50% to no clipping) 0: 512 1: 546 2: 580 3: 614 4: 648 5: 682 6: 716 7: 750 8: 785 9: 819 10: 853 11: 887 12: 921 13: 955 14: 989 15: 1023
9 to 0	CSYNCSLICE_H[9:0]	0010010010	R/W	Slice Level for Composite Sync Signal Separation (for horizontal sync signal) Valid when manual slice level setting is active (SLICERMODE_H = 0). Setting range: 0 to 1023

chanhvinh.com

(1) Video Signal Clipping Setting for Sync Separation

For input video signals supplied to the sync separator circuit, the level to clip the high tone component of the video signal is specified to reduce amplitude-dependency of the video signal. The video clipping level should be set not to deteriorate (i.e. to enable to detect) the composite sync signal components.

(2) Slice Level Setting for Horizontal Sync Separation

CSYNCSLICE_H sets the slice level for sync separation. This bit is valid only when SLICERMODE_H = 0.

chanhvinh.com

30.4.8 Sync Separation Control Register 4 (SYNSCR4)

Bit:	15	14	13	12	11	10	9	8	7	6	5	4	3	2	1	0
	—	—	—	—	SYNCMAXDUTY_V[5:0]						SYNCMINDUTY_V[5:0]					
Initial value:	0	0	0	0	0	0	1	1	1	1	0	0	1	0	1	0
R/W:	R	R	R	R	R/W	R/W	R/W	R/W	R/W	R/W	R/W	R/W	R/W	R/W	R/W	R/W

Bit	Bit Name	Initial Value	R/W	Description
15 to 12	—	All 0	R	Reserved These bits are always read as 0. The write value should always be 0.
11 to 6	SYNCMAXDUTY_V[5:0]	001111	R/W	Max Ratio of Horizontal Cycle to Vertical Sync Signal Pulse Width Valid when auto slice level setting is active (SLICERMODE_V ≠ 0).
5 to 0	SYNCMINDUTY_V[5:0]	001010	R/W	Min Ratio of Horizontal Cycle to Horizontal Sync Signal Pulse Width Valid when auto slice level setting is active (SLICERMODE_V ≠ 0).

(1) Sync Amplitude Detection Control for Vertical Sync Separation

SYNCMAXDUTY_V and SYNCMINDUTY_V control the sync signal amplitude detection of composite sync signal included in the video signal.

chanhvinh.com

Table 30.9 Auto Slice Level Register Settings for Composite Sync Separation

	Horizontal Period (µsec)	Horizontal Sync Width (µsec)	Video Active Period (µsec)	Horizontal Blanking Interval (µsec)	SYNCMAXDUTY_H[5:0], SYNCMAXDUTY_V[5:0], Recommended Value	SYNCMINDUTY_H[5:0], SYNCMINDUTY_V[5:0] Recommended Value
525i/ 59.94 Hz	63.56	4.70	52.66	10.90	15	10
625i/ 50 Hz	64.00	4.70	52.00	12.00	15	10

chanhvinh.com

30.4.9 Sync Separation Control Register 5 (SYNSCR5)

Bit:	15	14	13	12	11	10	9	8	7	6	5	4	3	2	1	0
	VSYNC DELAY	VSYNCSLICE[4:0]					CSYNCSLICE_V[9:0]									
Initial value:	0	0	1	0	1	1	0	0	1	0	0	1	0	0	1	0
R/W:	R/W	R/W	R/W	R/W	R/W	R/W	R/W	R/W	R/W	R/W	R/W	R/W	R/W	R/W	R/W	R/W

Bit	Bit Name	Initial Value	R/W	Description
15	VSYNCDELAY	0	R/W	Delays the separated vertical sync signal for 1/4 horizontal cycle. 0: Disable 1/4fH delay 1: Enable 1/4fH delay Note: Stability of the field determination result may be improved by changing VSYNCDELAY.
14 to 10	VSYNCSLICE[4:0]	01011	R/W	Threshold for Vertical Sync Separation The greater the value, the wider pulse width is needed.
9 to 0	CSYNCSLICE_V[9:0]	00100 10010	R/W	Slice Level for Composite Sync Signal Separation (for vertical sync signal) Valid when manual slice level setting is active (SLICERMODE_V = 0). Setting range: 0 to 1023

(1) Vertical Sync Separation Control

VSYNCDELAY controls the phases of vertical sync signal and horizontal sync signal. When VSYNCDELAY is 1, the stability of the field determination result may be improved by delaying the vertical sync signal for 1/4 fH.

(2) Vertical Sync Separation Control

VSYNCSLICE controls the threshold for separating vertical sync signal from composite sync signal. The value will be set depending on the serration pulse width of each video signal format. Table 30.10 shows the recommended set values.

chanhvinh.com

Table 30.10 Recommended Threshold and Serration Pulse Width (for reference)

	Serration Pulse Width [μsec]	VSYNCSLICE[4:0]
525i/59.94Hz	27.08	10
625i/50Hz	27.30	10

(3) Vertical Sync Separation Slice Level Control

CSYNCSLICE_V sets the slice level for sync separation. This bit is valid only when SLICERMODE_V = 0.

chanhvinh.com

30.4.10 Horizontal AFC Control Register 1 (HAFCCR1)

Bit:	15	14	13	12	11	10	9	8	7	6	5	4	3	2	1	0
	HAFCGAIN[3:0]				—	HAFCFREERUN	HAFCTYP[9:0]									
Initial value:	0	1	1	0	0	0	1	0	1	0	1	1	0	1	0	0
R/W:	R/W	R/W	R/W	R/W	R	R/W	R/W	R/W	R/W	R/W	R/W	R/W	R/W	R/W	R/W	R/W

Bit	Bit Name	Initial Value	R/W	Description
15 to 12	HAFCGAIN[3:0]	0110	R/W	Horizontal AFC Loop Gain 0 to 5: A smaller value needs a longer time for synchronization. 6: Standard value 7 to 15: A larger value needs a shorter time for synchronization.
11	—	0	R	Reserved This bit is always read as 0. The write value should always be 0.
10	HAFCFREERUN	0	R/W	Horizontal AFC Free-Run Oscillation Mode ON/OFF 0: OFF 1: ON
9 to 0	HAFCTYP[9:0]	10101 10100	R/W	Horizontal AFC Center Oscillation Frequency Set an offset from 1024th clock pulse in 27-MHz clock cycle units.

(1) Horizontal AFC Loop Gain Control

HAFCGAIN sets the loop gain (response speed) of the horizontal AFC. The larger the value is, the faster the response speed is. However, setting a larger value will result in more susceptibleness to noise.

(2) Horizontal AFC Free-Run Control

HAFCFREERUN controls the horizontal AFC free-run operation. When HAFCFREERUN is 1, the horizontal AFC operates independently of the inputs and performs free-run operation. HAFCFREERUN should usually be set to 0.

chanhvinh.com

(3) Horizontal AFC Lock Range (Horizontal) Control

HAFCMIN, HAFCTYP, and HAFCMAX set the horizontal AFC center oscillation frequency and lock range. The horizontal AFC function is controlled to stabilize the horizontal sync signal when the signals are deteriorated by trick playback of VCR or a weak electric field.

HAFCMIN[9:0]	Min oscillation frequency of horizontal AFC
HAFCTYP[9:0]	Center oscillation frequency of horizontal AFC
HAFCMAX[9:0]	Max oscillation frequency of horizontal AFC

Horizontal AFC lock range can be indicated by the following formula.

$$HAFCMIN < HAFCTYP < HAFCMAX \quad \ldots(1)$$

where

HAFCMIN	= HAFCTYP − allowable deviation
HAFCTYP	= N × M − 1024
HAFCMAX	= HAFCTYP + allowable deviation
M:	Number of clock pulses per horizontal cycle (27MHz sampling)
N:	Double speed setting 2 (double speed): M < 1024 1 (normal speed): M ≥ 1024

The horizontal AFC is locked if the formula indicated by (1) is satisfied.

When the horizontal AFC is locked, FHLOCK in VSYNCSR is set to 1. Otherwise, FHLOCK is 0.

Table 30.11 Horizontal AFC Lock Range Setting

Signal Format	fH Horizontal Cycle	M fH@ 27.0MHz	N-Times Speed Setting	HAFCMAX [9:0]	HAFCTYP [9:0]	HAFCMIN [9:0]	Deviation		Unit
525i	63.56 [µsec]	1716 [clk]	1	771	692	618	79	-74	[clk]
				15.034	15.734	16.434	-0.700	0.700	[kHz]
625i	64.00 [µsec]	1728 [clk]	1	785	704	629	81	-75	[clk]
				14.925	15.625	16.325	-0.700	0.700	[kHz]

chanhvinh.com

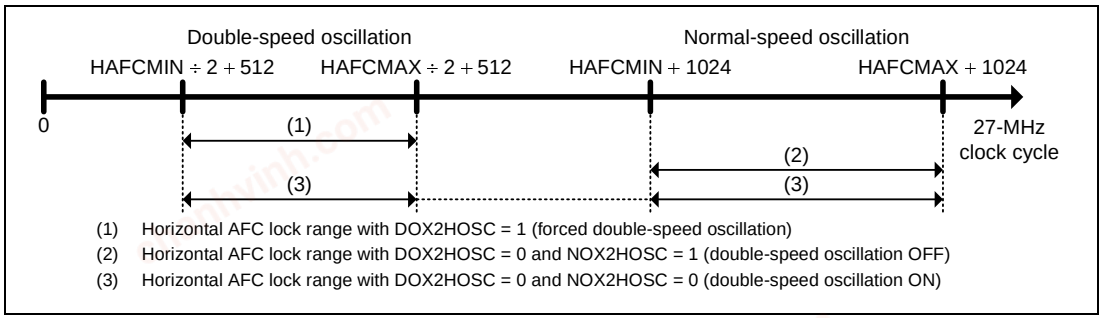

Figure 30.11 Horizontal AFC Lock Range (Horizontal)

chanhvinh.com

30.4.11 Horizontal AFC Control Register 2 (HAFCCR2)

Bit:	15	14	13	12	11	10	9	8	7	6	5	4	3	2	1	0
	HAFCSTART[3:0]				NOX2H OSC	DOX2H OSC	HAFCMAX[9:0]									
Initial value:	0	0	0	0	0	0	1	0	1	1	1	0	0	1	1	0
R/W:	R/W	R/W	R/W	R/W	R/W	R/W	R/W	R/W	R/W	R/W	R/W	R/W	R/W	R/W	R/W	R/W

Bit	Bit Name	Initial Value	R/W	Description
15 to 12	HAFCSTART [3:0]	0000	R/W	Start Line of Horizontal AFC Normal Operation (=VBI process end line) Start the phase comparison at the Nth line after the vertical sync signal.
11	NOX2HOSC	0	R/W	Disable of Horizontal AFC Double Speed Detection 0: Auto control 1: Double speed oscillation disabled
10	DOX2HOSC	0	R/W	Horizontal AFC Forced Double-Speed Oscillation 0: Auto control 1: Forced double-speed oscillation
9 to 0	HAFCMAX [9:0]	1011100110	R/W	Maximum Oscillation Frequency of Horizontal AFC Set an offset from 1024th clock pulse in 27-MHz clock cycle units.

(1) Horizontal AFC Lock Range (Vertical) Control

HAFCSTART and HAFCEND specify the horizontal AFC operation range. The horizontal AFC operation should be normally stopped from several lines before the vertical sync signal to the vertical sync signal to avoid a malfunction occurring in the VCR head switch part.

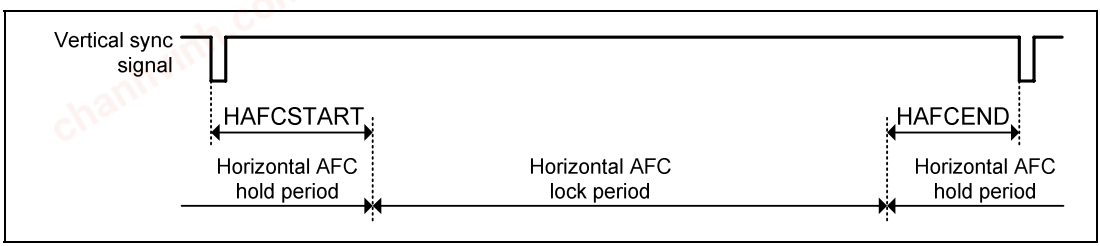

Figure 30.12 Horizontal AFC Lock Range (Vertical)

chanhvinh.com

(2) Horizontal AFC Double-Speed Control

NOX2HOSC and DOX2HOSC control the horizontal AFC double speed detection. In the NTSC, PAL and SECAM formats, DOX2HOSC should always be 0.

chanhvinh.com

30.4.12 Horizontal AFC Control Register 3 (HAFCCR3)

Bit:	15	14	13	12	11	10	9	8	7	6	5	4	3	2	1	0
	HAFCEND[3:0]				HAFCMODE [1:0]		HAFCMIN[9:0]									
Initial value:	1	0	0	0	1	0	1	0	1	0	0	0	0	0	1	0
R/W:	R/W	R/W	R/W	R/W	R/W	R/W	R/W	R/W	R/W	R/W	R/W	R/W	R/W	R/W	R/W	R/W

Bit	Bit Name	Initial Value	R/W	Description
15 to 12	HAFCEND [3:0]	1000	R/W	End line of Horizontal AFC Normal Operation (=VBI process start line) Stop the phase comparison at the Nth line before the vertical sync signal.
11, 10	HAFCMODE [1:0]	10	R/W	Horizontal AFC VBI Period Operating Mode [1] Loop gain control for low S/N 0: Loop gain is fixed. 1: Loop gain is automatically controlled. [0] Horizontal AFC control during VBI period 0: Phase comparison is stopped during VBI period. 1: Loop gain is reduced during VBI period.
9 to 0	HAFCMIN [9:0]	1010000010	R/W	Min Oscillation Frequency of Horizontal AFC Set an offset from 1024th clock pulse in 27-MHz clock cycle units.

(1) Horizontal AFC Operation Control during VBI Period

The malfunction caused by noise can be avoided by setting HAFCMODE[1] to 1 to reduce the loop gain for low S/N (VSYNCSR.ISNOISY = 1). The recommended value for HAFCMODE[1] is 1.

HAFCMODE[0] controls the horizontal AFC operation during the VBI period. The recommended value for HAFCMODE[0] is 0.

chanhvinh.com

30.4.13 Vertical Countdown Control Register 1 (VCDWCR1)

Bit:	15	14	13	12	11	10	9	8	7	6	5	4	3	2	1	0
	VCDFREERUN	NOVCD50	NOVCD60	VCDDEFAULT[1:0]		VCDWINDOW[5:0]						VCDOFFSET[4:0]				
Initial value:	0	0	0	0	0	0	1	0	1	0	0	0	1	0	1	0
R/W:	R/W	R/W	R/W	R/W	R/W	R/W	R/W	R/W	R/W	R/W	R/W	R/W	R/W	R/W	R/W	R/W

Bit	Bit Name	Initial Value	R/W	Description
15	VCDFREERUN	0	R/W	Vertical Countdown Free-Run Oscillation Mode ON/OFF 0: OFF 1: ON
14	NOVCD50	0	R/W	Vertical Countdown 50-Hz Oscillation Mode OFF 0: 50-Hz oscillation ON 1: 50-Hz oscillation OFF
13	NOVCD60	0	R/W	Vertical Countdown 60-Hz (59.94-Hz) Oscillation Mode OFF 0: 60-Hz oscillation ON 1: 60-Hz oscillation OFF
12, 11	VCDDEFAULT [1:0]	00	R/W	Vertical Countdown Center Oscillation Frequency 0: Auto-detection 1: 50.00 Hz 2: 59.94 Hz 3: 60.00 Hz
10 to 5	VCDWINDOW [5:0]	010100	R/W	Vertical Countdown Sync Area Set a value in 0.1-ms units.
4 to 0	VCDOFFSET [4:0]	01010	R/W	Vertical Countdown Minimum Oscillation Frequency Set the shift from the center frequency in 0.1-ms units.

(1) Vertical Countdown Free-Run Operation Control

VCDFREERUN controls the vertical countdown free-run operation. When VCDFREERUN is 1, the vertical countdown free-run operation is performed independently of the inputs. VCDFREERUN should usually be set to 0.

(2) Vertical Countdown 50-Hz Oscillation Control

chanhvinh.com

NOVD50 controls 50-Hz oscillation. When NOVCD50 is 1, the vertical countdown operation is not locked to 50 Hz.

(3) Vertical Countdown 60-Hz Oscillation Control

NOVD60 controls 60-Hz oscillation. When NOVCD60 is 1, the vertical countdown operation is not locked to 60 Hz.

(4) Vertical Countdown Center Oscillation Frequency Control

VCDDEFAULT sets the center frequency for the vertical countdown.

Table 30.12 Vertical Countdown Operating Modes

VCDDEFAULT[1:0]	Operating Mode
0	Auto-detection
1	50.00 Hz
2	59.94 Hz
3	60.00 Hz

(5) Vertical Countdown Lock Range Control

VCDWINDOW and VCDOFFSET control the vertical countdown lock range. Figure 30.13 shows the bit settings and lock ranges.

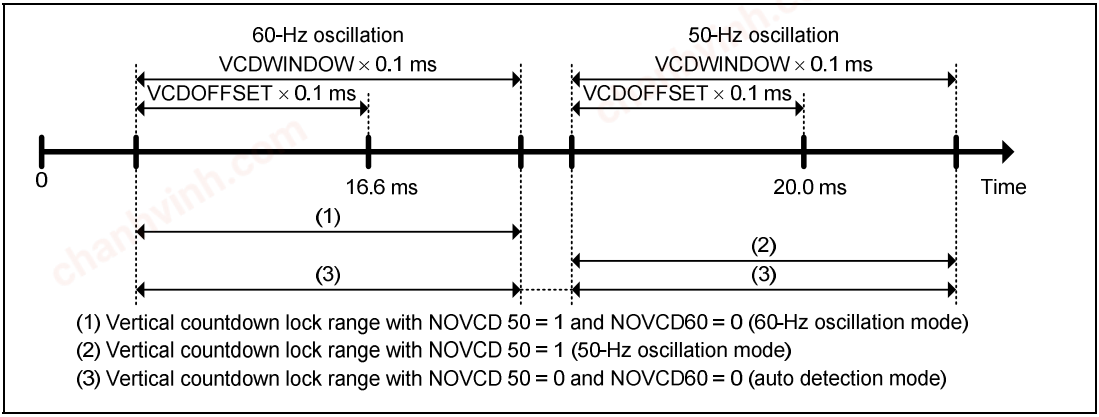

Figure 30.13 Vertical Countdown Lock Ranges

chanhvinh.com

30.4.14 Digital Clamp Control Register 1 (DCPCR1)

Bit:	15	14	13	12	11	10	9	8	7	6	5	4	3	2	1	0
	DCPMODE_Y	—	—	—	DCPCHECK	—	BLANKLEVEL_Y[9:0]									
Initial value:	1	0	0	0	0	0	0	0	0	0	0	0	0	0	0	0
R/W:	R/W	R	R	R	R/W	R	R/W	R/W	R/W	R/W	R/W	R/W	R/W	R/W	R/W	R/W

Bit	Bit Name	Initial Value	R/W	Description
15	DCPMODE_Y	1	R/W	Clamp Level Setting Mode (Y signal) 0: Manual clamp level setting 1: Auto clamp level setting
14 to 12	—	All 0	R	Reserved These bits are always read as 0. The write value should always be 0.
11	DCPCHECK	0	R/W	Digital Clamp Pulse Position Check The offset given by BLANKLEVEL is added to the clamp position.
10	—	0	R	Reserved These bits are always read as 0. The write value should always be 0.
9 to 0	BLANKLEVEL_Y [9:0]	0000000000	R/W	Clamp Offset Level (Y signal) Set the subtraction value. Set a value in 1-LSB units. 2s complement

(1) Y-Signal Clamp Operation Control

DCPMODE_Y controls the clamp level of Y signal.

When DCPMODE_Y = 0, the value set by BLANKLEVEL_Y is subtracted from the video signal.

Y signal output = Y signal input – BLANKLEVEL_Y

When DCPMODE_Y is 1, the video signal level at the digital clamp pulse position (pedestal level) and BLANKLEVEL_Y are added together and the resulting value is subtracted from the video signal.

Y signal output = Y signal input – (detected value + BLANKLEVEL_Y)

(2) Digital Clamp Pulse Position Check Control

chanhvinh.com

DCPCHECK allows the digital clamp pulse position to be displayed and checked on the screen. The following shows the steps to check the position.

1. Set DCPCHECK (digital clamp pulse position check bit) to 1.
2. Set SRCLEFT (left end of input video signal capturing area bit) and RES_HS[10:0] in SCL0_DS3 of the video display controller 4 scaler to 0.
3. Set clamp offset level of the signal to be monitored to Min value (−512 for BLANKLEVL_Y, (−32 for BLANKLEVL_Cb/Cr).
4. Adjust the pulse position and width using DCPPOS_Y (or DCPPOS_C) and DCPWIDTH.

chanhvinh.com

30.4.15 Digital Clamp Control Register 2 (DCPCR2)

Bit:	15	14	13	12	11	10	9	8	7	6	5	4	3	2	1	0
	DCPMODE_C	—	—	—	BLANKLEVEL_CB[5:0]						BLANKLEVEL_CR[5:0]					
Initial value:	0	0	0	0	0	0	0	0	0	0	0	0	0	0	0	0
R/W:	R/W	R	R	R	R/W	R/W	R/W	R/W	R/W	R/W	R/W	R/W	R/W	R/W	R/W	R/W

Bit	Bit Name	Initial Value	R/W	Description
15	DCPMODE_C	0	R/W	Clamp Level Setting Mode (Cb/Cr signal) 0: Manual clamp level setting 1: Auto clamp level setting
14 to 12	—	All 0	R	Reserved These bits are always read as 0. The write value should always be 0.
11 to 6	BLANKLEVEL_CB [5:0]	000000	R/W	Clamp Offset Level (Cb signal) Set the subtraction value. Set a value in 1-LSB units. 2s complement
5 to 0	BLANKLEVEL_CR [5:0]	000000	R/W	Clamp Offset Level (Cr signal) Set the subtraction value. Set a value in 1-LSB units. 2s complement

chanhvinh.com

(1) Cb/Cr-Signal Clamp Operation Control

DCPMODE_C controls the clamp level of Cb/Cr-signal.

When DCPMODE_C = 0, the value set by BLANKLEVEL_CB/BLANKLEVEL_CR is subtracted from the video signal.

Cb signal output = Cb signal input – BLANKLEVEL_CB

Cr signal output = Cr signal input – BLANKLEVEL_CR

When DCPMODE_C = 1, sum of the video signal level (center level) in the digital clamp pulse position and BLANKLEVEL_CB/CR is subtracted from the video signal.

Cb signal output = Cb signal input – (detected value + BLANKLEVEL_CB)

Cr signal output = Cr signal input – (detected value + BLANKLEVEL_CR)

chanhvinh.com

30.4.16 Digital Clamp Control Register 3 (DCPCR3)

Bit:	15	14	13	12	11	10	9	8	7	6	5	4	3	2	1	0
	—	DCPRESPONSE[2:0]			—	—	—	—	—	—	—	—	—	—	—	—
Initial value:	0	1	0	1	0	0	0	0	0	0	0	0	0	0	0	0
R/W:	R	R/W	R/W	R/W	R	R	R	R	R	R	R	R	R	R	R	R

Bit	Bit Name	Initial Value	R/W	Description
15	—	0	R	Reserved This bit is always read as 0. The write value should always be 0.
14 to 12	DCPRESPONSE [2:0]	101	R/W	Digital Clamp Response Speed The larger the value is, the faster the response speed is. However, that will result in more susceptibleness to noise.
11 to 0	—	All 0	R	Reserved These bits are always read as 0. The write value should always be 0.

(1) Digital Clamp Response Speed

DCPRESPONSE sets the digital clamp response speed.

Though the larger value makes the response faster, that will result in more susceptibleness to noise.

DCPRESPONSE is used in common to Y, Cb, and Cr signals.

chanhvinh.com

30.4.17 Digital Clamp Control Register 4 (DCPCR4)

Bit:	15	14	13	12	11	10	9	8	7	6	5	4	3	2	1	0
	DCPSTART[5:0]						—	—	—	—	—	—	—	—	—	—
Initial value:	0	1	0	0	0	0	0	0	0	0	0	0	0	0	0	0
R/W:	R/W	R/W	R/W	R/W	R/W	R/W	R	R	R	R	R	R	R	R	R	R

Bit	Bit Name	Initial Value	R/W	Description
15 to 10	DCPSTART [5:0]	010000	R/W	Digital Clamp Start Line (in 1-line units) Start clamp pulses at the Nth line after the vertical sync signal.
9 to 0	—	All 0	R	Reserved These bits are always read as 0. The write value should always be 0.

chanhvinh.com

30.4.18 Digital Clamp Control Register 5 (DCPCR5)

Bit:	15	14	13	12	11	10	9	8	7	6	5	4	3	2	1	0
	DCPEND[5:0]						—	—	—	—	—	—	—	—	—	—
Initial value:	0	1	0	0	0	0	0	0	0	0	0	0	0	0	0	0
R/W:	R/W	R/W	R/W	R/W	R/W	R/W	R	R	R	R	R	R	R	R	R	R

Bit	Bit Name	Initial Value	R/W	Description
15 to 10	DCPEND [5:0]	010000	R/W	Digital Clamp End Line (in 1-line units) Stop clamp pulses at the Nth line before the vertical sync signal.
9 to 0	—	All 0	R	Reserved These bits are always read as 0. The write value should always be 0.

(1) Digital Clamp Pulse Control (Vertical)

DCPSTART and DCPEND control the digital clamp pulses in the vertical direction. Figure 30.14 shows the bit settings and digital clamp timing.

DCPSTART and DCPEND are used in common to Y, Cb, and Cr signals.

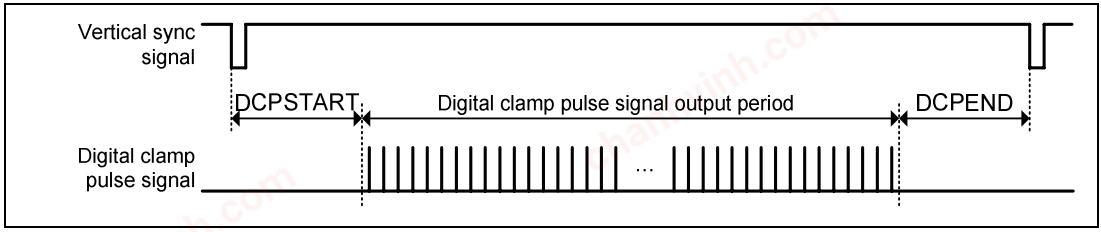

Figure 30.14 Digital Clamp Timing (Vertical)

chanhvinh.com

30.4.19 Digital Clamp Control Register 6 (DCPCR6)

Bit:	15	14	13	12	11	10	9	8	7	6	5	4	3	2	1	0
	—	DCPWIDTH[6:0]							—	—	—	—	—	—	—	—
Initial value:	0	0	1	1	0	1	1	0	0	0	0	0	0	0	0	0
R/W:	R	R/W	R/W	R/W	R/W	R/W	R/W	R/W	R	R	R	R	R	R	R	R

Bit	Bit Name	Initial Value	R/W	Description
15	—	0	R	Reserved This bit is always read as 0. The write value should always be 0.
14 to 8	DCPWIDTH [6:0]	0110110	R/W	Digital Clamp Pulse Width Setting range: 0 to 127 Set a value in 27-MHz clock cycle units.
7 to 0	—	All 0	R	Reserved These bits are always read as 0. The write value should always be 0.

chanhvinh.com

30.4.20 Digital Clamp Control Register 7 (DCPCR7)

Bit:	15	14	13	12	11	10	9	8	7	6	5	4	3	2	1	0
	DCPPOS_Y[7:0]								—	—	—	—	—	—	—	—
Initial value:	1	0	1	0	0	0	1	0	0	0	0	0	0	0	0	0
R/W:	R/W	R/W	R/W	R/W	R/W	R/W	R/W	R/W	R	R	R	R	R	R	R	R

Bit	Bit Name	Initial Value	R/W	Description
15 to 8	DCPPOS_Y [7:0]	10100010	R/W	Digital Clamp Pulse Horizontal Start Position (Y signal) Setting range: 0 to 255 Set a value in 27-MHz clock cycle units.
7 to 0	—	All 0	R	Reserved These bits are always read as 0. The write value should always be 0.

chanhvinh.com

30.4.21 Digital Clamp Control Register 8 (DCPCR8)

Bit:	15	14	13	12	11	10	9	8	7	6	5	4	3	2	1	0
	DCPPOS_C[7:0]								—	—	—	—	—	—	—	—
Initial value:	0	0	0	1	1	0	1	1	0	0	0	0	0	0	0	0
R/W:	R/W	R/W	R/W	R/W	R/W	R/W	R/W	R/W	R	R	R	R	R	R	R	R

Bit	Bit Name	Initial Value	R/W	Description
15 to 8	DCPPOS_C[7:0]	00011011	R/W	Digital Clamp Pulse Horizontal Start Position (Cb/Cr signal) Setting range: 0 to 255 Set a value in 27-MHz clock cycle units.
7 to 0	—	All 0	R	Reserved These bits are always read as 0. The write value should always be 0.

(1) Digital Clamp Pulse Control (Horizontal)

DCPWIDTH, DCPPOS_Y, and DCPPOS_C control the digital clamp pulses in the horizontal direction. Figure 30.15 shows the bit settings and digital clamp timing.

DCPPOS_Y is used for Y signal and DCPPOS_C is for Cb/Cr signal. DCPWIDTH is used in common to Y, Cb, and Cr signals.

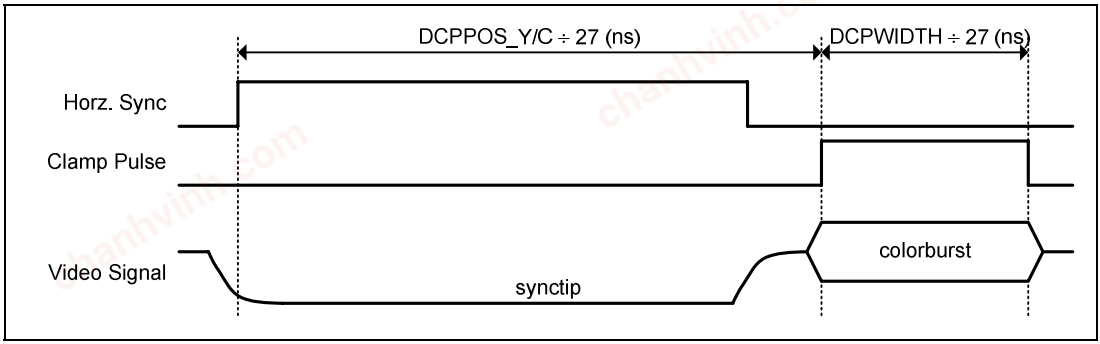

Figure 30.15 Digital Clamp Timing (Horizontal)

chanhvinh.com

30.4.22 Noise Detection Control Register (NSDCR)

Bit:	15	14	13	12	11	10	9	8	7	6	5	4	3	2	1	0
	—	—	ACFINPUT[1:0]		—	—	—	ACFLAGTIME[4:0]					—	—	ACFFILTER[1:0]	
Initial value:	0	0	0	0	0	0	0	0	0	0	0	0	0	0	0	0
R/W:	R	R	R/W	R/W	R	R	R	R/W	R/W	R/W	R/W	R/W	R	R	R/W	R/W

Bit	Bit Name	Initial Value	R/W	Description
15, 14	—	All 0	R	Reserved These bits are always read as 0. The write value should always be 0.
13, 12	ACFINPUT[1:0]	00	R/W	Video Signal for Autocorrelation Function 0: Y signal 1: Cb signal 2, 3: Cr signal
11 to 9	—	All 0	R	Reserved These bits are always read as 0. The write value should always be 0.
8 to 4	ACFLAGTIME[4:0]	00000	R/W	Delay Time for Autocorrelation Function Calculation 0 to 31 clock pulses @ 27-MHz clock The NSDSR.AFCSTRENGTH value almost corresponds to noise power when the delay time is set to 0.
3, 2	—	All 0	R	Reserved These bits are always read as 0. The write value should always be 0.
1, 0	ACFFILTER[1:0]	00	R/W	Smoothing Parameter of Autocorrelation Function Data The smaller the ACFFILTER value is, the longer the time period is taken. The time period varies from 1 field to several seconds.

chanhvinh.com

(1) Input for Noise Detection

ACFINPUT controls inputs for noise detection.

Table 30.13 Input Selection for Noise Detection

ACFINPUT	Input Signal
0	Y signal
1	Cb signal
2, 3	Cr signal

(2) Autocorrelation Function Control for Noise Detection

ACFLAGTIME controls autocorrelation function for noise detection.

The NSDSR.AFCSTRENGTH value almost corresponds to noise power when the delay time is set to 0.

(3) Smoothing Filter Control for Noise Detection

ACFFILTER controls smoothing function for noise detection inputs.

The smaller the ACFFILTER value is, the larger the field integration is (the longer time period is taken for noise detection).

chanhvinh.com

30.4.23 Burst Lock/Chroma Decoding Control Register (BTLCR)

Bit:	15	14	13	12	11	10	9	8	7	6	5	4	3	2	1	0
	LOCKRANGE [1:0]		LOOPGAIN[1:0]		LOCKLIMIT[1:0]		BCOFREERUN	—	DEFAULTSYS [1:0]		NONTSC358	NONTSC443	NOPALM	NOPALN	NOPAL443	NOSECAM
Initial value:	0	1	0	1	1	0	0	0	0	0	0	0	0	0	0	0
R/W:	R/W	R/W	R/W	R/W	R/W	R/W	R/W	R	R/W	R/W	R/W	R/W	R/W	R/W	R/W	R/W

Bit	Bit Name	Initial Value	R/W	Description
15, 14	LOCKRANGE [1:0]	01	R/W	Burst Lock PLL Lock Range 0: ±400 Hz 1: ±800 Hz 2: ±1200 Hz 3: ±1600 Hz
13, 12	LOOPGAIN [1:0]	01	R/W	Burst Lock PLL Loop Gain The larger value makes the response faster, but the noise is more easily picked up.
11, 10	LOCKLIMIT [1:0]	10	R/W	Level for Burst Lock PLL to Re-Search Free-Run Frequency The larger value more easily unlocks the PLL to start re-search.
9	BCOFREERUN	0	R/W	Burst Lock PLL Free-Run Oscillation Mode ON/OFF 0: OFF 1: ON
8	—	0	R	Reserved This bit is always read as 0. The write value should always be 0.
7, 6	DEFAULTSYS [1:0]	00	R/W	Default Color System 0: NTSC 1: PAL 2: SECAM 3: Not specified
5	NONTSC358	0	R/W	NTSC-M Detection Control 0:NTSC-M detection ON 1:NTSC-M detection OFF

chanhvinh.com

Bit	Bit Name	Initial Value	R/W	Description
4	NONTSC443	0	R/W	NTSC-4.43 Detection Control 0:NTSC-4.43 detection ON 1:NTSC-4.43 detection OFF
3	NOPALM	0	R/W	PAL-M Detection Control 0:PAL-M detection ON 1:PAL-M detection OFF
2	NOPALN	0	R/W	PAL-N Detection Control 0:PAL-N detection ON 1:PAL-N detection OFF
1	NOPAL443	0	R/W	PAL-B, G, H, I, D Detection Control 0: PAL-B, G, H, I, D detection ON 1: PAL-B, G, H, I, D detection OFF
0	NOSECAM	00	R/W	SECAM Detection Control 0: SECAM detection ON 1: SECAM detection OFF.

(1) Lock Range of Burst Lock PLL

LOCKRANGE controls the lock range of the burst lock PLL.

Table 30.14 Lock Range of Burst Lock PLL

LOCKRANGE	Lock Range of Burst Lock PLL
0	0: ±400 Hz
1	1: ±800 Hz
2	2: ±1200 Hz
3	3: ±1600 Hz

chanhvinh.com

(2) Burst Lock PLL Loop Gain Control

LOOPGAIN controls the loop gain of the burst lock PLL.

The larger value makes the response faster, but the noise is more easily picked up.

(3) Burst Lock PLL Lock Limit Control

LOCKLIMIT controls the lock limit of the burst lock PLL.

The larger the LOCKLIMIT value is, the more easily the PLL free-run frequency is unlocked to start re-search.

(4) Burst Lock PLL Free-Run Operation Control

BCOFREERUN controls the free-run operation of burst lock PLL.

When BCOFREERUN is 1, the burst lock PLL performs free-run operation independently of the inputs. BCOFREERUN should usually be set to 0.

(5) Color System for No Signal State during Chroma Decoding

DEFAULTSYS sets the color system for the no signal state during chroma decoding.

Table 30.15 Color System at No Signal

DEFAULTSYS	Color System for No Signal State
0	NTSC
1	PAL
2	SECAM
3	Not specified

chanhvinh.com

(6) Color System Detection Control

NONTSC358, NONTSC443, NOPALM, NOPALN, NOPAL443, and NOSECAM control the color system detection.

Color system detection can be fully automatic, manual, or semi-automatic (detecting the specified color system only). If the detection result does not apply to any color system type, a color system selected by DEFAULTSYS is used for the operation.

Color system detection can be controlled (ON or OFF) individually for each type. By enabling one particular color system to be detected, the color system can be fixed. Table 30.16 shows the color system detection control methods.

Table 30.16 Color System Detection Control

	NOSECAM	NOPAL443	NOPALN	NOPALM	NONTSC443	NONTSC358
Auto	0	0	0	0	0	0
NTSC-3.58(M)	1	1	1	1	1	0
NTSC-4.43	1	1	1	1	0	1
PAL-M	1	1	1	0	1	1
PAL-N	1	1	0	1	1	1
PAL-4.43	1	0	1	1	1	1
SECAM	0	1	1	1	1	1

In auto mode, the color system detection result is stored into the register. Tables 30.17 and 30.18 show color system detection and detection result setting.

chanhvinh.com

Table 30.17 Color System Detection Result (1)

COLORSYS[1:0]	FSCMODE	FVMODE	Detection Result
0: NTSC	0: 3.58MHz	don't care	NTSC-M
0: NTSC	1: 4.43MHz	don't care	NTSC-4.43
1: PAL	0: 3.58MHz	0: 50Hz	PAL-N
1: PAL	0: 3.58MHz	1: 60Hz	PAL-M
1: PAL	1: 4.43MHz	0: 50Hz	PAL-B, H, I, G, D
1: PAL	1: 4.43MHz	1: 60Hz	PAL-60
2: SECAM	—	—	SECAM
3: Unknown	—	—	Undetectable

Table 30.18 Color System Detection Result (2)

	ISNTSC	ISPAL	ISSECAM
Undetectable	0	0	0
NTSC	1	0	0
PAL	0	1	0
SECAM	0	0	1

chanhvinh.com

30.4.24 Burst Gate Pulse Control Register (BTGPCR)

Bit:	15	14	13	12	11	10	9	8	7	6	5	4	3	2	1	0
	BGPCHECK	BGPWIDTH[6:0]							BGPSTART[7:0]							
Initial value:	0	0	1	0	0	1	0	0	1	0	0	0	0	0	1	0
R/W:	R/W	R/W	R/W	R/W	R/W	R/W	R/W	R/W	R/W	R/W	R/W	R/W	R/W	R/W	R/W	R/W

Bit	Bit Name	Initial Value	R/W	Description
15	BGPCHECK	0	R/W	Burst Gate Pulse Position Check Displays the front and end edges of burst gate pulses by white lines.
14 to 8	BGPWIDTH [6:0]	0100100	R/W	Burst Gate Pulse Width Specify the offset from the 64th clock pulse width in 27-MHz clock cycle units.
7 to 0	BGPSTART [7:0]	10000010	R/W	Burst Gate Pulse Start Position Specify the position from the horizontal sync signal reference in 27-MHz clock cycle units.

(1) Burst Gate Pulse Control

BGPWIDTH and BGPSTART control the burst gate pulse timing.

The burst gate pulse position is specified to extract color burst from the video signal which is considered as a reference signal for the burst lock PLL. Usually, the burst gate pulse should be set so that it should start at the latter part of the horizontal sync signal and include the reference position in order to respond to an insert position shift of color burst caused by VCR.

chanhvinh.com

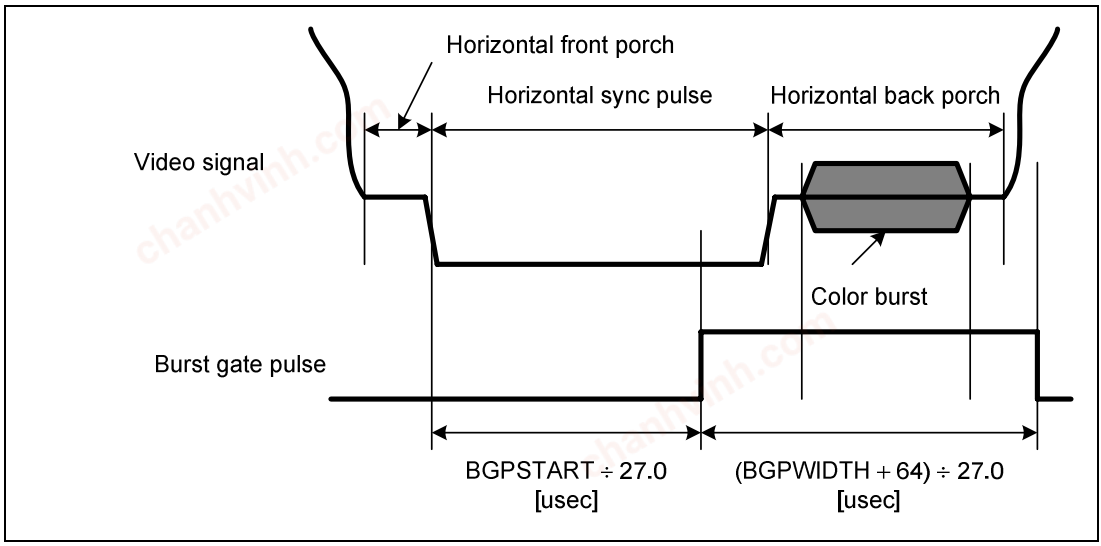

Figure 30.16 Burst Gate Pulse Generation Timing

(2) Burst Gate Pulse Position Check

BGPCHECK controls the burst gate pulse position check on screen. The following shows the steps to check the position:

- Burst gate position check: Set BGPCHECK to 1.
- Input video signal capturing left end setting: Set SRCLEFT to 0 and RES_HS[10:0] in SCL0_DS3 of the video display controller 4 scaler to 0.
- Adjust the pulse position and width with BGPSTART and BGPWIDTH.

chanhvinh.com

30.4.25 ACC Control Register 1 (ACCCR1)

Bit:	15	14	13	12	11	10	9	8	7	6	5	4	3	2	1	0
	KILLEROFFSET[3:0]				ACC MODE	ACCMAXGAIN [1:0]		ACCLEVEL[8:0]								
Initial value:	1	0	0	0	0	0	0	1	0	0	1	0	0	1	0	0
R/W:	R/W	R/W	R/W	R/W	R/W	R/W	R/W	R/W	R/W	R/W	R/W	R/W	R/W	R/W	R/W	R/W

Bit	Bit Name	Initial Value	R/W	Description
15 to 12	KILLEROFFSET[3:0]	1000	R/W	The levels of these bits and KILLERLEVEL are added together to be the level to turn off the color killer. This level corresponds to the Peak-to-Peak amplitude of the color burst signal.
11	ACCMODE	0	R/W	ACC Operating Mode 0: Auto gain 1: Manual gain
10, 9	ACCMAXGAIN[1:0]	00	R/W	Maximum ACC Gain Valid when ACCMODE = 0 (auto gain setting). 0: 6 times 1: 8 times 2: 12 times 3: 16 times
8 to 0	ACCLEVEL[8:0]	100100100	R/W	ACC Reference Color Burst Amplitude Valid when ACCMODE = 0 (auto gain setting). Set Peak-to-Peak amplitude in 1-LSB units.

(1) Color Killer Offset Control

KILLEROFFSET sets the hysteresis to make the color killer OFF.

If the KILLEROFFSET value is too large, the color killer cannot be turned off as long as the burst amplitude is not large enough. If the KILLEROFFSET value is too small, the color killer is turned on and off repeatedly due to noise.

The standard value is between 4 and 10.

chanhvinh.com

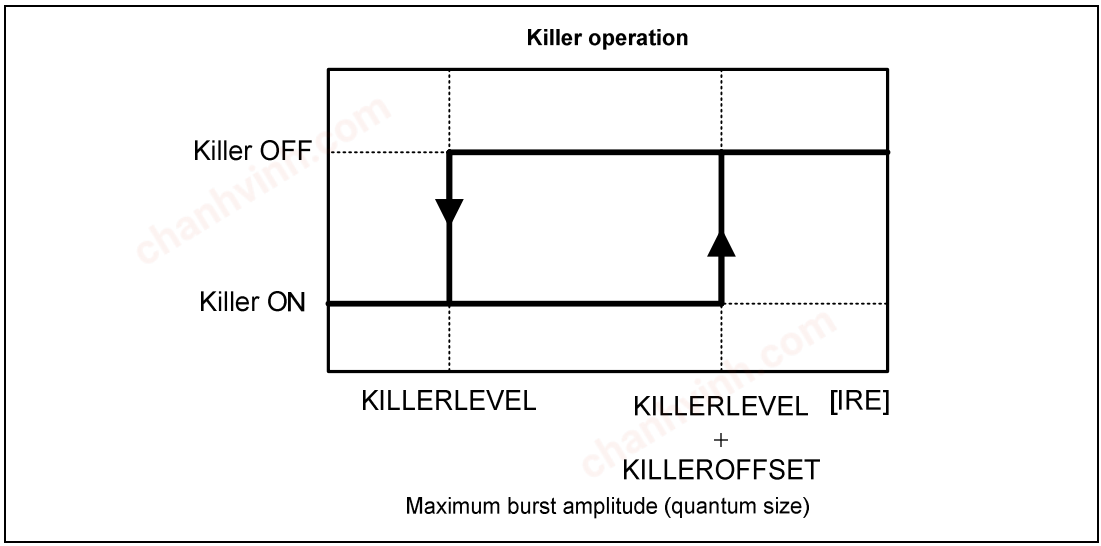

Figure 30.17 Color Killer Operation

(2) ACC Operation Control

ACCMODE controls the ACC operation.

Table 30.19 ACC Operating Modes

ACCMODE	Color Gain Adjustment
0	Auto gain
1	Manual gain

(3) Maximum ACC Gain Control

ACCMAXGAIN controls the maximum ACC gain. ACCMAXGAIN is valid only when ACCMODE = 0.

Table 30.20 Maximum ACC Gain

ACCMAXGAIN	Maximum Color Gain
0	6 times
1	8 times
2	12 times
3	16 times

chanhvinh.com

(4) ACC Level Control

ACCLEVEL sets the burst amplitude of the chroma signal after gain correction. ACCLEVEL is valid only when ACCMODE = 1.

The ACC adjusts the gain so that the input chroma signal burst amplitude should be the same level as the ACCLEVEL value.

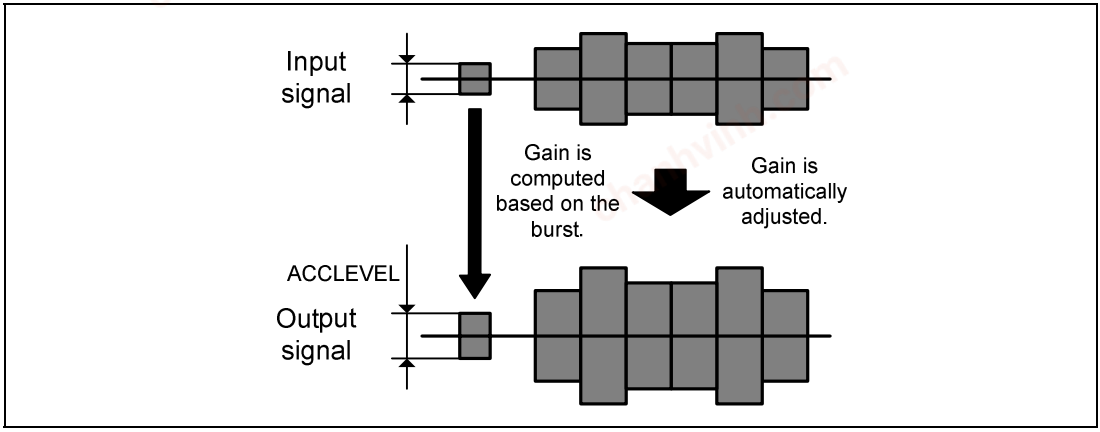

Figure 30.18 ACC Level Setting

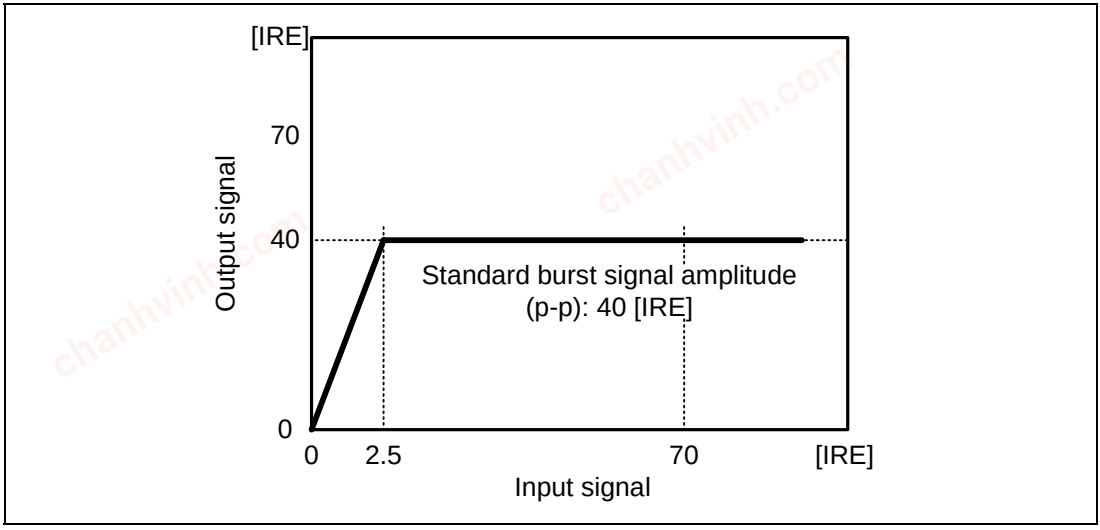

Figure 30.19 ACC Input/Output Characteristics

chanhvinh.com

Table 30.21 ACC Characteristics

Input Burst Signal Level	Output Burst Signal Level
More than 24.1 [dB]	Reference amplitude (variable) ± acceptable error (variable)
24.1[dB] or less	Decreased in proportion to input level

chanhvinh.com

30.4.26 ACC Control Register 2 (ACCCR2)

Bit:	15	14	13	12	11	10	9	8	7	6	5	4	3	2	1	0
	—	—	—	—	—	CHROMASUBGAIN[1:0]		CHROMAMAINGAIN[8:0]								
Initial value:	0	0	0	0	0	0	0	1	0	0	0	0	0	0	0	0
R/W:	R	R	R	R	R	R/W	R/W	R/W	R/W	R/W	R/W	R/W	R/W	R/W	R/W	R/W

Bit	Bit Name	Initial Value	R/W	Description
15 to 11	—	All 0	R	Reserved This bit is always read as 0. The write value should always be 0.
10, 9	CHROMASUBGAIN [1:0]	00	R/W	Chroma Manual Gain (sub) Valid when ACCMODE = 1 (manual gain setting) 0: 1 time 1: 2 times 2: 4 times 3: 8 times
8 to 0	CHROMAMAINGAIN [8:0]	100000000	R/W	Chroma Manual Gain (main) Valid when ACCMODE = 1 (manual gain setting) The value 256 corresponds to 1 time.

(1) Chroma Gain Adjustment (Manual) Control

CHROMASUBGAIN and CHROMAMAINGAIN control the chroma gain. CHROMASUBGAIN and CHROMAMAINGAIN are valid only when ACCMODE is 1.

C signal output = C signal input × (CHROMASUBGAIN + CHROMAMAINGAIN/256)

chanhvinh.com

30.4.27 ACC Control Register 3 (ACCCR3)

Bit:	15	14	13	12	11	10	9	8	7	6	5	4	3	2	1	0
	ACCRESPONSE [1:0]		ACCPRECIS[5:0]						KILLER MODE	KILLERLEVEL[5:0]						—
Initial value:	0	1	0	1	0	1	0	0	0	0	0	1	0	0	1	0
R/W:	R/W	R/W	R/W	R/W	R/W	R/W	R/W	R/W	R/W	R/W	R/W	R/W	R/W	R/W	R/W	R

Bit	Bit Name	Initial Value	R/W	Description
15, 14	ACCRESPONSE [1:0]	01	R/W	ACC Response Speed The larger value makes the response faster, but the noise is more easily picked up.
13 to 8	ACCPRECIS [5:0]	010100	R/W	ACC Gain Adjustment Accuracy Set the acceptable error level of color burst signal amplitude after ACC adjustment by 1 LSB of 10-bit accuracy.
7	KILLERMODE	0	R/W	Forced Color Killer Mode ON/OFF 0: Auto-detection 1: Killer mode is forcedly ON.
6 to 1	KILLERLEVEL [5:0]	001001	R/W	Color Killer Operation Start Point Set the half value of Peak-to-Peak amplitude by 1 LSB of 10-bit accuracy.
0	—	0	R	Reserved This bit is always read as 0. The write value should always be 0.

(1) ACC Response Speed Control

ACCRESPONSE controls the ACC response speed.

The larger value makes the response faster, and the smaller value makes it slower. However, the large value causes the noise to be more easily picked up.

chanhvinh.com

(2) ACC Acceptable Error Range Control

ACCPRECIS controls the acceptable error range of the output burst signal amplitude based on ACCLEVEL (target value).

If ACCLEVEL = 236 and ACCPRECIS = 20, the ACC gain is fixed within the following range:

(236 – 20) < Output signal burst signal amplitude < (236 – 20)

(3) Killer Operating Mode Control

KILLERMODE controls the killer operating mode.

When KILLERMODE = 1, the killer is forcedly turned ON.

(4) Killer Level Control

KILLERLEVEL controls the level to make the killer ON.

For details, see section 30.4.25 (1) Color Killer Offset Control.

chanhvinh.com

30.4.28 TINT Control Register (TINTCR)

Bit:	15	14	13	12	11	10	9	8	7	6	5	4	3	2	1	0
	TINTSUB[5:0]						TINTMAIN[9:0]									
Initial value:	0	0	0	0	0	0	0	0	0	0	0	0	0	0	0	0
R/W:	R/W	R/W	R/W	R/W	R/W	R/W	R/W	R/W	R/W	R/W	R/W	R/W	R/W	R/W	R/W	R/W

Bit	Bit Name	Initial Value	R/W	Description
15 to 10	TINTSUB [5:0]	000000	R/W	Fine Adjustment of R-Y Demodulation Axis (only valid for NTSC/PAL) Set a value by 360/1024 degrees. 2s complement
9 to 0	TINTMAIN [9:0]	0000000000	R/W	Hue Adjustment Level (only valid for NTSC/PAL) Set a value by 360/1024 degrees. 2s complement

(1) R-Y Axis Correction Control

TINTSUB controls the phase of R-Y axis by ±11.25 degrees.

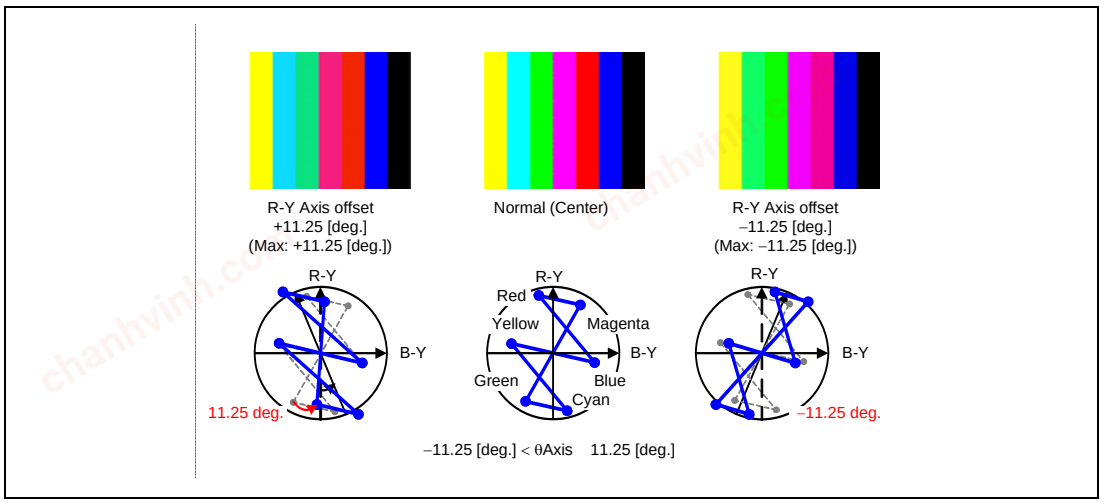

Figure 30.20 Example of R-Y Axis Correction

chanhvinh.com

(2) Hue Adjustment (TINT) Correction Control

TINTMAIN controls the phase of demodulation axis by 0 to 360 degrees.

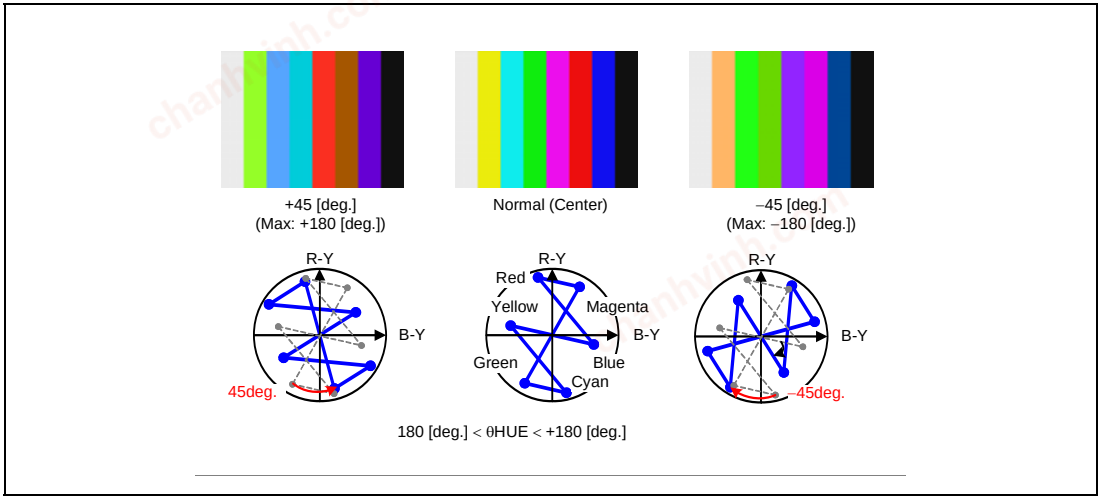

Figure 30.21 Example of Hue Adjustment (TINT) Correction

chanhvinh.com

30.4.29 Y/C Delay/Chroma Decoding Control Register (YCDCR)

Bit:	15	14	13	12	11	10	9	8	7	6	5	4	3	2	1	0
	—	—	—	—	—	—	—	LUMADELAY[4:0]					—	CHROMALPF	DEMODMODE[1:0]	
Initial value:	0	0	0	0	0	0	0	0	0	0	0	0	0	0	1	0
R/W:	R	R	R	R	R	R	R	R/W	R/W	R/W	R/W	R/W	R	R/W	R/W	R/W

Bit	Bit Name	Initial Value	R/W	Description
15 to 9	—	All 0	R	Reserved These bits are always read as 0. The write value should always be 0.
8 to 4	LUMADELAY [4:0]	00000	R/W	Luminance Signal Delay Adjustment –16 to +15 clock pulses Set a value by the 2s complement.
3	—	0	R	Reserved This bit is always read as 0. The write value should always be 0.
2	CHROMALPF	0	R/W	LPF for Demodulated Chroma 0: Not used 1: Used
1, 0	DEMODMODE [1:0]	10	R/W	Averaging Processing for Pre-Demodulated Line 0: No processing 1: Setting prohibited 2: For PAL 3: Setting prohibited

chanhvinh.com

(1) Y/C Delay Adjustment Control

LUMADELAY controls the Y/C delay.

Table 30.22 Y/C Delay Adjustment

LUMADELAY	Operation
31	Advances Y signal 16 [clk]
:	:
16	Advances Y signal 1 [clk]
0	No delay
1	Delays Y signal for 1 [clk]
:	:
15	Delays Y signal for 15 [clk]

(2) Frequency Band Inhibition after Demodulation

CHROMALPF controls frequency band inhibition after demodulation.

Table 30.23 Frequency Band Inhibition after Demodulation

CHROMALPF	Operation
0	Frequency band inhibition filter OFF
1	Frequency band inhibition filter ON

(3) Chroma Decoding Operation Control

DEMODMODE controls operating modes of chroma demodulation.

Table 30.24 Y/C delay adjustment

DEMODMODE	Operation
0	One-line demodulation
2	Two-line demodulation for PAL only
1 and 3	Setting prohibited

chanhvinh.com

30.4.30 AGC Control Register 1 (AGCCR1)

Bit:	15	14	13	12	11	10	9	8	7	6	5	4	3	2	1	0
	—	—	DOREDUCE	NOREDUCE	AGCRESPONSE[2:0]			AGCLEVEL[8:0]								
Initial value:	0	0	0	0	1	0	1	0	1	1	1	0	1	1	0	0
R/W:	R	R	R/W	R/W	R/W	R/W	R/W	R/W	R/W	R/W	R/W	R/W	R/W	R/W	R/W	R/W

Bit	Bit Name	Initial Value	R/W	Description
15, 14	—	All 0	R	Reserved These bits are always read as 0. The write value should always be 0.
13	DUREDUCE	0	R/W	Manual Control of Sync Signal Amplitude Detection during VBI Period 0: Sets sync amplitude to AGC standard value. 1: Sets AGC gain to 3/4 times the normal gain value.
12	NOREDUCE	0	R/W	Control of Sync Signal Amplitude Detection during VBI Period 0: Detects sync amplitude. 1: Does not detect sync amplitude.
11 to 9	AGCRESPONSE[2:0]	101	R/W	AGC Response Speed The larger register value makes the response faster However, the larger value causes the noise to be more easily picked up.
8 to 0	AGCLEVEL[8:0]	011101100	R/W	Sync Signal Reference Amplitude Setting range: 0 to 511 10-bit unsigned value

chanhvinh.com

(1) Sync Signal Amplitude Detection during VBI Period

DOREDUCE and NOREDUCE control detection of the AGC sync signal amplitude fluctuation during VBI period.

Table 30.25 Sync Signal Amplitude Detection Operation during VBI Period

DOREDUCE	Sync Signal Amplitude Detection Operation during VBI Period
0	Sets sync amplitude to AGC standard
1	Sets AGC gain to 3/4 times the normal gain value

Table 30.26 Sync Signal Amplitude Detection during VBI Period

NOREDUCE	Sync Signal Amplitude Detection during VBI Period
0	Detects sync amplitude.
1	Does not detect sync amplitude.

(2) AGC Response Speed Control

AGCRESPONSE controls the AGC response speed.

The larger register value makes the response faster, and smaller value makes it slower. (The large value causes the noise to be more easily picked up.)

The recommended value is 4 to avoid a malfunction caused by trick playback of VCR (fast-forward play/rewind play) or a weak electric field.

(3) AGC Level Control

AGCLEVEL controls the AGC target level.

When NTSC signals are quantized by a 10-bit A/D converter, sync signal amplitude for full range of the A/D converter can be provided by:

$$1023[\mathrm{LSB}] \times (40[\mathrm{IRE}] \div 173[\mathrm{IRE}]) = 236.53179[\mathrm{LSB}]$$

chanhvinh.com

Table 30.27 shows the ideal AGC level for each input signal format.

Table 30.27 AGC Level Setting Values (Ideal Values)

Input Signal Format	AGCLEVEL[8:0]
NTSC	236
PAL/SECAM	236

Table 30.28 AGC Characteristics

Input Sync Signal Level	Output Sync Signal Level
0 or more [dB]	Increased in proportion to input level
–8.52 to 0 [dB]	Reference amplitude (variable) ± acceptable error (variable)
–8.52 or less [dB]	Decreased in proportion to input level

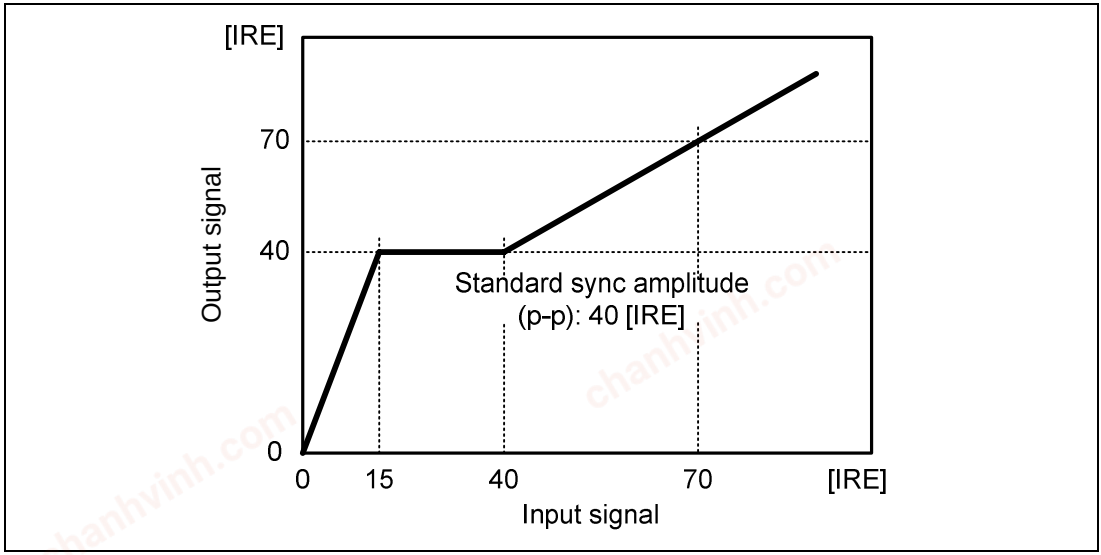

Figure 30.22 AGC Characteristics (Sync Signal Amplitude Reference)

chanhvinh.com

30.4.31 AGC Control Register 2 (AGCCR2)

Bit:	15	14	13	12	11	10	9	8	7	6	5	4	3	2	1	0
	—	—	AGCPRECIS[5:0]						—	—	—	—	—	—	—	—
Initial value:	1	1	0	0	1	0	1	0	0	1	0	0	0	0	0	0
R/W:	R	R	R/W	R/W	R/W	R/W	R/W	R/W	R	R	R	R	R	R	R	R

Bit	Bit Name	Initial Value	R/W	Description
15, 14	—	All 1	R	Reserved These bits are always read as 1. The write value should always be 1.
13 to 8	AGCPRECIS [5:0]	001010	R/W	AGC Gain Adjustment Accuracy Set acceptable error level for sync pulse amplitude after AGC adjustment by 1 LSB of 10-bit accuracy.
7	—	0	R	Reserved This bit is always read as 0. The write value should always be 0.
6	—	1	R	Reserved This bit is always read as 1. The write value should always be 1.
5 to 0	—	All 0	R	Reserved These bits are always read as 0. The write value should always be 0.

(1) AGC Acceptable Error Range Control

AGCPRECIS controls the acceptable error range of the output sync signal amplitude based on AGCLEVEL (target value).

If AGCLEVEL = 236 and AGCPRECIS = 10, AGC gain is fixed within the following range:

(236 − 10) < Output sync signal amplitude < (236 + 10)

In this case, the PGA gain can fall within a 2-step range. For video image with stabilized sync signal amplitude, AGCPRECIS = 4 is recommended, which enables the PGA gain to fall within a 1-step range, when the electric field is strong. For the above setting, the recommended value is 10 to avoid hunting in a weak electric field.

chanhvinh.com

30.4.32 Peak Limiter Control Register (PKLIMTCR)

Bit:	15	14	13	12	11	10	9	8	7	6	5	4	3	2	1	0
	PEAKLEVEL[1:0]		PEAKATTACK [1:0]		PEAKRELEASE [1:0]		PEAKRATIO [1:0]		MAXPEAKSAMPLES[7:0]							
Initial value:	0	0	1	0	0	0	0	0	0	0	0	0	0	0	0	0
R/W:	R/W	R/W	R/W	R/W	R/W	R/W	R/W	R/W	R/W	R/W	R/W	R/W	R/W	R/W	R/W	R/W

Bit	Bit Name	Initial Value	R/W	Description
15, 14	PEAKLEVEL [1:0]	00	R/W	Peak Luminance Value to Operate Peak Limiter (video signal level) 0: Limiter OFF 1: 1008 LSB 2: 992 LSB 3: 960 LSB Peak limiter is not operated if AGC is OFF irrespective of PEAKLEVEL value.
13, 12	PEAKATTACK [1:0]	10	R/W	Response Speed with Peak Limiter Gain Decreased The larger value makes the response faster.
11, 10	PEAKRELEASE [1:0]	00	R/W	Response Speed with Peak Limiter Gain Increased The larger value makes the response faster.
9, 8	PEAKRATIO[1:0]	00	R/W	Maximum Compression Rate of Peak Limiter 0: Compressed up to 50% 1: Compressed up to 25% 2: Compressed up to 12.5% 3: Compressed up to 0%
7 to 0	MAXPEAK SAMPLES[7:0]	00000000	R/W	Allowable Number of Overflowing Pixels Set a value by 1024 pixels. Exceeding this value will start peak limiter operation.

chanhvinh.com

(1) Peak Limiter Level Control

PEAKLEVEL controls the peak luminance limited by the peak limiter.

If the number of pixels counted exceeds the value set in PEAKLEVEL and there exist pixels more than the value set in MAXPEAKSAMPLES, the peak limiter function is activated to reduce the gain.

Table 30.29 Peak Limiter Level Control

PEAKLEVEL	Output Sync Signal Level
0	Limiter OFF
1	Peak limiter is activated at 1008 LSB
2	Peak limiter is activated at 992 LSB
3	Peak limiter is activated at 960 LSB

(2) Peak Limiter Response Speed Control

PEAKATTACK controls the response speed when the peak limiter gain is reduced.

The larger value makes the response faster.

(3) Peak Limiter Response Speed Control

PEAKRELEASE controls the response speed when the peak limiter gain is increased.

The larger value makes the response faster.

(4) Peak Limiter Gain Down Control

PEAKRATIO sets the maximum compression rate of the peak limiter.

Specifically, PEAKRATIO controls the amount of gain reduction (compression ratio) using the peak limiter function.

chanhvinh.com

Table 30.30 Peak Limiter Gain Down Control

PEAKRATIO	Output Sync Signal Level
0	Compressed up to 50%
1	Compressed up to 25%
2	Compressed up to 12.5%
3	Compressed up to 0%

(5) Peak Limiter Determination Control

MAXPEAKSAMPLES controls the number of overflowing pixels allowed.

If the number of pixels counted during the vertical active period exceeds the value set in PEAKLEVEL and there exist pixels more than the value set in MAXPEAKSAMPLES, the peak limiter function is activated to reduce the gain.

The maximum allowable value is obtained by MAXPEAKSAMPLES × 1024.

chanhvinh.com

30.4.33 Over-Range Control Register 1 (RGORCR1)

Bit:	15	14	13	12	11	10	9	8	7	6	5	4	3	2	1	0
	—	—	—	—	—	—	RADJ_O_LEVEL0[9:0]									
Initial value:	0	0	0	0	0	0	1	1	1	1	1	1	1	1	1	1
R/W:	R	R	R	R	R	R	R/W	R/W	R/W	R/W	R/W	R/W	R/W	R/W	R/W	R/W

Bit	Bit Name	Initial Value	R/W	Description
15 to 10	—	All 0	R	Reserved These bits are always read as 0. The write value should always be 0.
9 to 0	RADJ_O_LEVEL0 [9:0]	1111111111	R/W	A/D Over-Threshold Level (Between levels 0 and 1) Level 0 (normal) to level 3 (completely over the range) are available.

(1) A/D Over-Threshold Level (Between Levels 0 and 1) Control

RADJ_O_LEVEL0 controls the A/D over-threshold level (between levels 0 and 1).

Figure 30.23 shows the register values and threshold levels.

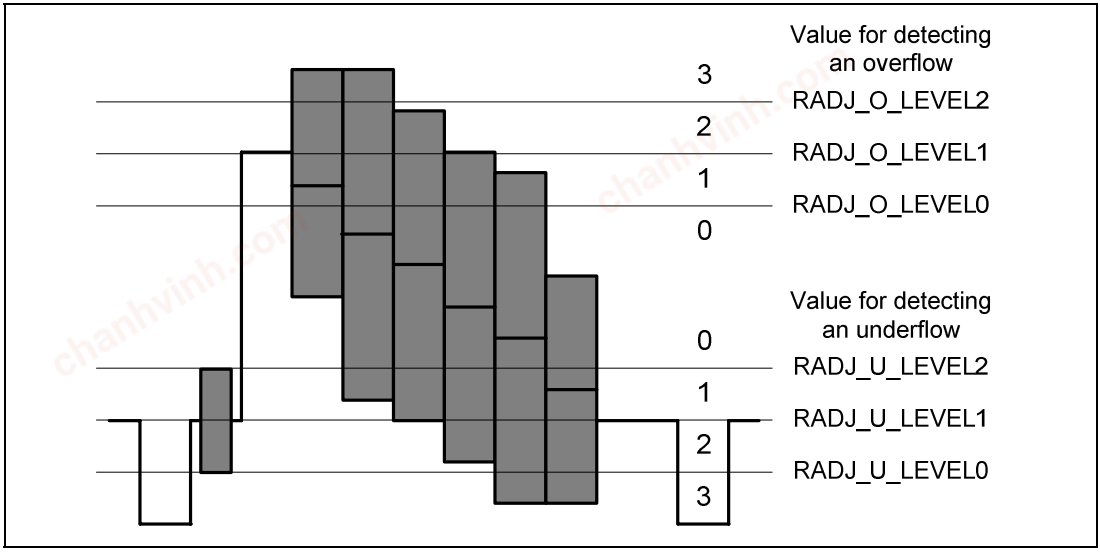

Figure 30.23 Over-Range Determination Areas

chanhvinh.com

30.4.34 Over-Range Control Register 2 (RGORCR2)

Bit:	15	14	13	12	11	10	9	8	7	6	5	4	3	2	1	0
	—	—	—	—	—	—	RADJ_U_LEVEL0[9:0]									
Initial value:	0	0	0	0	0	0	0	0	0	0	0	0	0	0	0	0
R/W:	R	R	R	R	R	R	R/W	R/W	R/W	R/W	R/W	R/W	R/W	R/W	R/W	R/W

Bit	Bit Name	Initial Value	R/W	Description
15 to 10	—	All 0	R	Reserved These bits are always read as 0. The write value should always be 0.
9 to 0	RADJ_U_LEVEL0[9:0]	0000000000	R/W	A/D Under-Threshold Level (Between levels 2 and 3) Level 0 (normal) to level 3 (completely under the range) are available.

(1) A/D Under-Threshold Level (Between Levels 2 and 3) Control

RADJ_U_LEVEL0 controls the A/D under-threshold level (between levels 2 and 3).

For the register values and threshold levels, see section 30.4.33, Over-Range Control Register 1 (RGORCR1).

chanhvinh.com

30.4.35 Over-Range Control Register 3 (RGORCR3)

Bit:	15	14	13	12	11	10	9	8	7	6	5	4	3	2	1	0
	—	—	—	—	—	—	RADJ_O_LEVEL1[9:0]									
Initial value:	0	0	0	0	0	0	1	1	1	1	1	1	1	1	1	1
R/W:	R	R	R	R	R	R	R/W	R/W	R/W	R/W	R/W	R/W	R/W	R/W	R/W	R/W

Bit	Bit Name	Initial Value	R/W	Description
15 to 10	—	All 0	R	Reserved These bits are always read as 0. The write value should always be 0.
9 to 0	RADJ_O_LEVEL1 [9:0]	1111111111	R/W	A/D Over-Threshold Level (Between levels 1 and 2) Level 0 (normal) to level 3 (completely over the range) are available.

(1) A/D Over-Threshold Level (Between Levels 1 and 2) Control

RADJ_O_LEVEL1 controls the A/D over-threshold level (between levels 1 and 2).

For the register values and threshold levels, see section 30.4.33, Over-Range Control Register 1 (RGORCR1).

chanhvinh.com

30.4.36 Over-Range Control Register 4 (RGORCR4)

Bit:	15	14	13	12	11	10	9	8	7	6	5	4	3	2	1	0
	—	—	—	—	—	—	RADJ_U_LEVEL1[9:0]									
Initial value:	0	0	0	0	0	0	0	0	0	0	0	0	0	0	0	0
R/W:	R	R	R	R	R	R	R/W	R/W	R/W	R/W	R/W	R/W	R/W	R/W	R/W	R/W

Bit	Bit Name	Initial Value	R/W	Description
15 to 10	—	All 0	R	Reserved These bits are always read as 0. The write value should always be 0.
9 to 0	RADJ_U_LEVEL1 [9:0]	0000000000	R/W	A/D Under-Threshold Level (Between levels 1 and 2) Level 0 (normal) to level 3 (completely under the range) are available.

(1) A/D Under -Threshold Level (Between Levels 1 and 2) Control

RADJ_U_LEVEL1 controls the A/D under-threshold level (between levels 1 and 2).

For the register values and threshold levels, see section 30.4.33, Over-Range Control Register 1 (RGORCR1).

chanhvinh.com

30.4.37 Over-Range Control Register 5 (RGORCR5)

Bit:	15	14	13	12	11	10	9	8	7	6	5	4	3	2	1	0
	—	—	—	—	—	—	RADJ_O_LEVEL2[9:0]									
Initial value:	0	0	0	0	0	0	1	1	1	1	1	1	1	1	1	1
R/W:	R	R	R	R	R	R	R/W	R/W	R/W	R/W	R/W	R/W	R/W	R/W	R/W	R/W

Bit	Bit Name	Initial Value	R/W	Description
15 to 10	—	All 0	R	Reserved These bits are always read as 0. The write value should always be 0.
9 to 0	RADJ_O_LEVEL2 [9:0]	1111111111	R/W	A/D Over-Threshold Level (Between levels 2 and 3) Level 0 (normal) to level 3 (completely over the range) are available.

(1) A/D Over-Threshold Level (Between Levels 2 and 3) Control

RADJ_O_LEVEL2 controls the A/D over-threshold level (between levels 2 and 3).

For the register values and threshold levels, see section 30.4.33, Over-Range Control Register 1 (RGORCR1).

chanhvinh.com

30.4.38 Over-Range Control Register 6 (RGORCR6)

Bit:	15	14	13	12	11	10	9	8	7	6	5	4	3	2	1	0
	—	—	—	—	—	—	RADJ_U_LEVEL2[9:0]									
Initial value:	0	0	0	0	0	0	0	0	0	0	0	0	0	0	0	0
R/W:	R	R	R	R	R	R	R/W	R/W	R/W	R/W	R/W	R/W	R/W	R/W	R/W	R/W

Bit	Bit Name	Initial Value	R/W	Description
15 to 10	—	All 0	R	Reserved These bits are always read as 0. The write value should always be 0.
9 to 0	RADJ_U_LEVEL2[9:0]	0000000000	R/W	A/D Under-Threshold Level (Between levels 0 and 1) Level 0 (normal) to level 3 (completely under the range) are available.

(1) A/D Under-Threshold Level (Between Levels 0 and 1) Control

RADJ_U_LEVEL2 controls the A/D under-threshold level (between levels 0 and 1).

For the register values and threshold levels, see section 30.4.33, Over-Range Control Register 1 (RGORCR1).

chanhvinh.com

30.4.39 Over-Range Control Register 7 (RGORCR7)

Bit:	15	14	13	12	11	10	9	8	7	6	5	4	3	2	1	0
	—	TEST_MONI[2:0]			RADJ_MIX_K_FIX[2:0]			—	—	—	—	—	—	UCMP_SW	DCMP_SW	HWIDE_SW
Initial value:	0	0	0	0	0	0	0	0	0	0	0	0	0	0	0	1
R/W:	R	R/W	R/W	R/W	R/W	R/W	R/W	R	R	R	R	R	R	R/W	R/W	R/W

Bit	Bit Name	Initial Value	R/W	Description
15	—	0	R	Reserved This bit is always read as 0. The write value should always be 0.
14 to 12	TEST_MONI[2:0]	000	R/W	Test Mode 0 to 3: Normal operation 4: Level 0 part is output as black. 5: Level 1 part is output as black. 6: Level 2 part is output as black. 7: Level 3 part is output as black.
11 to 9	RADJ_MIX_K_FIX[2:0]	000	R/W	Forced Range Over/Under Mode 0 to 3: Auto detection 4: Level 0 (normal state) 5: Fixed to level 1 (almost normal) 6: Fixed to level 2 (almost over the range) 7: Fixed to level 3 (completely over the range)
8 to 3	—	All 0	R	Reserved These bits are always read as 0. The write value should always be 0.
2	UCMP_SW	0	R/W	Over-Range Detection Enable 0: Disables over-range detection 1: Enables over-range detection
1	DCMP_SW	0	R/W	Under-Range Detection Enable 0: Disables under-range detection 1: Enables under-range detection
0	HWIDE_SW	1	R/W	Horizontal Enlargement of Over/Under-Range Level 0: Does not provide horizontal enlargement 1: Provides horizontal enlargement

chanhvinh.com

(1) Over-Range Test Control

TEST_MONI controls the over-range test.

(2) Forced Over/Under-Range Mode Control

RADJ_MIX_K_FIX controls the forced over-/under-range detection.

(3) Over-Range Detection Control

UCMP_SW enables the over-range detection.

(4) Under-Range Detection Control

DCMP_SW enables the under-range detection.

(5) Horizontal Enlargement at Over/Under-Range Level

HWIDE_SW controls the horizontal enlargement of the over/under-range level.

chanhvinh.com

30.4.40 Feedback Control Register for Horizontal AFC Phase Comparator (AFCPFCR)

Bit:	15	14	13	12	11	10	9	8	7	6	5	4	3	2	1	0
	—	—	—	—	—	—	—	—	—	—	—	PHDET_FIX	—	PHDET_DIV[2:0]		
Initial value:	0	0	0	0	0	0	0	0	0	0	0	0	0	1	0	1
R/W:	R	R	R	R	R	R	R	R	R	R	R	R/W	R	R/W	R/W	R/W

Bit	Bit Name	Initial Value	R/W	Description
15 to 5	—	All 0	R	Reserved These bits are always read as 0. The write value should always be 0.
4	PHDET_FIX	0	R/W	Forcible or LOWGAIN Control 0: LOWGAIN determination result used 1: Forcibly controlled (adjusted with PHDET_DIV)
3	—	0	R	Reserved This bit is always read as 0. The write value should always be 0.
2 to 0	PHDET_DIV [2:0]	101	R/W	Phase Comparator Feedback Adjust for Low Sync Signal Lock Stability 0: 1/1 1: 1/2 2: 1/4 3: 1/8 4: 1/16 5: 1/32 6 and 7: Setting prohibited

chanhvinh.com

(1) Phase Comparator Feedback Adjust

PHDET_DEV adjusts the feedback amount as the phase comparison result when the lock stability is low. The greater the denominator is, the slower the reaction speed to the signal is.

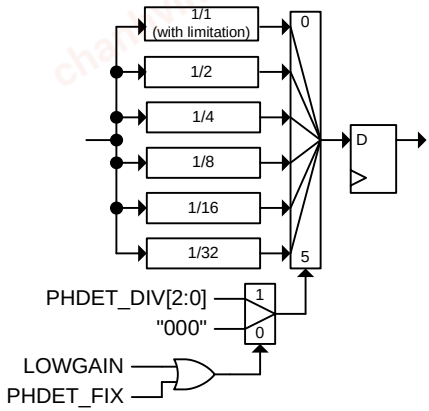

LOWGAIN	PHDET_FIX	PHDET_DIV [2:0]	Output
-	1	0	1/1
		1	1/2
		2	1/4
		3	1/8
		4	1/16
		5	1/32
0	0	-	1/1
1	-	0	1/1
		1	1/2
		2	1/4
		3	1/8
		4	1/16
		5	1/32

Figure 30.24 Phase Comparator Feedback Adjust

chanhvinh.com

30.4.41 Register Update Enable Register (RUPDCR)

Bit:	15	14	13	12	11	10	9	8	7	6	5	4	3	2	1	0
	NEWSETTING	—	—	—	—	—	—	—	—	—	—	—	—	—	—	—
Initial value:	0	0	0	0	0	0	0	0	0	0	0	0	0	0	0	0
R/W:	R/W	R	R	R	R	R	R	R	R	R	R	R	R	R	R	R

Bit	Bit Name	Initial Value	R/W	Description
15	NEWSETTING	0	R/W	V Update Enable for TGCR1 to TGCR3 1: Enables update. 0: Disables update.
14 to 0	—	All 0	R	Reserved These bits are always read as 0. The write value should always be 0.

(1) V Update Enable for TGCR1 to TGCR3

NEWSETTING enables/disables TGCR1 to TGCR3 to execute V update.

chanhvinh.com

30.4.42 Sync Separation Status/Vertical Cycle Read Register (VSYNCSR)

Bit:	15	14	13	12	11	10	9	8	7	6	5	4	3	2	1	0
	FHCOUNT[0]	FHLOCK	ISNOISY	FHMODE	NOSIGNAL	FVLOCK	FVMODE	INTERLACED	FVCOUNT[7:0]							
Initial value:	0	0	0	0	0	0	0	0	0	0	0	0	0	0	0	0
R/W:	R	R	R	R	R	R	R	R	R	R	R	R	R	R	R	R

Bit	Bit Name	Initial Value	R/W	Description
15	FHCOUNT[0]	0	R	Horizontal AFC Oscillation Cycle (bit 0) Set a value by 1/64 of 27-MHz clock.
14	FHLOCK	0	R	Horizontal AFC Lock Detection Result 0: Unlocked 1: Locked
13	ISNOISY	0	R	Detection Result of Low S/N Signal by Sync Separation 0: Not low S/N signal 1: Low S/N signal
12	FHMODE	0	R	Speed Detection Result 0: Normal speed (525i/625i, etc.) 1: Multiplied speed (525p/625p, etc.)
11	NOSIGNAL	0	R	No-Signal Detection Result 0: Vertical sync signal detected 1: No vertical sync signal detected
10	FVLOCK	0	R	Vertical Countdown Lock Detection Result 0: Unlocked 1: Locked
9	FVMODE	0	R	Vertical Countdown Oscillation Mode 0: 50Hz 1: 60Hz
8	INTERLACED	0	R	Interlace Detection Result 0: Progressive 1: Interlace
7 to 0	FVCOUNT[7:0]	00000000	R	Vertical Cycle Measurement Result (in 0.1-ms units)

chanhvinh.com

(1) Horizontal AFC Oscillation Cycle Read

FHCOUNT indicates bit 0 of the horizontal AFC oscillation cycle.

(2) Horizontal AFC Lock Detection Result Read

FHLOCK indicates the horizontal AFC lock detection result.

(3) Sync Separation Low S/N Signal Detection Result Read

ISNOISY indicates the detection result of low S/N signal by sync separation.

(4) Speed Detection Result Read

FHMODE indicates the speed detection result.

(5) No-Signal Detection Result Read

NOSIGNAL indicates the no-signal detection result.

(6) Vertical Countdown Lock Detection Result Read

FVLOCK indicates the vertical countdown lock detection result.

(7) Interlace Detection Result Read

INTERFACED indicates the interlace detection result.

(8) Vertical Cycle Measurement Result Read

FVCOUNT indicates the vertical cycle measurement result.

chanhvinh.com

30.4.43 Horizontal Cycle Read Register (HSYNCSR)

Bit:	15	14	13	12	11	10	9	8	7	6	5	4	3	2	1	0
	FHCOUNT[16:1]															
Initial value:	0	0	0	0	0	0	0	0	0	0	0	0	0	0	0	0
R/W:	R	R	R	R	R	R	R	R	R	R	R	R	R	R	R	R

Bit	Bit Name	Initial Value	R/W	Description
15 to 0	FHCOUNT [16:1]	H'0000	R	Horizontal AFC Oscillation Cycle (bit 16 to bit 1) Set a value by 1/64 of 27-MHz clock.

(1) Horizontal AFC Oscillation Cycle Read

FHCOUNT indicates the upper bits of the horizontal AFC oscillation cycle.

chanhvinh.com

30.4.44 Digital Clamp Read Register 1 (DCPSR1)

Bit:	15	14	13	12	11	10	9	8	7	6	5	4	3	2	1	0
	CLAMPLEVEL_CB[5:0]						CLAMPLEVEL_Y[9:0]									
Initial value:	0	0	0	0	0	0	0	0	0	0	0	0	0	0	0	0
R/W:	R	R	R	R	R	R	R	R	R	R	R	R	R	R	R	R

Bit	Bit Name	Initial Value	R/W	Description
15 to 10	CLAMPLEVEL_CB[5:0]	000000	R	Digital Clamp Subtraction Value (Cb signal) Offset from the reference black level Set a value in 1-LSB units. 2s complement
9 to 0	CLAMPLEVEL_Y[9:0]	0000000000	R	Digital Clamp Subtraction Value (Y signal) Offset from the reference black level Set a value in 1-LSB units. 2s complement

(1) Reading Digital Clamp Subtraction Value of Cb Signal

CLAMPLEVEL_CB indicates the digital clamp subtraction value of Cb signal.

(2) Reading Digital Clamp Subtraction Value of Y in Composite Signal

CLAMPLEVEL_Y indicates the digital clamp subtraction value of Y signal.

chanhvinh.com

30.4.45 Digital Clamp Read Register 2 (DCPSR2)

Bit:	15	14	13	12	11	10	9	8	7	6	5	4	3	2	1	0
	CLAMPLEVEL_CR[5:0]						—	—	—	—	—	—	—	—	—	—
Initial value:	0	0	0	0	0	0	0	0	0	0	0	0	0	0	0	0
R/W:	R	R	R	R	R	R	R	R	R	R	R	R	R	R	R	R

Bit	Bit Name	Initial Value	R/W	Description
15 to 10	CLAMPLEVEL_CR[5:0]	000000	R	Digital Clamp Subtraction Value (Cr signal) Offset from the reference black level Set a value in 1-LSB units. 2s complement
9 to 0	—	All 0	R	Reserved These bits are always read as 0. The write value should always be 0.

(1) Reading Digital Clamp Subtraction Value of Cr Signal

CLAMPLEVEL_CR indicates the digital clamp subtraction value of Cr signal.

chanhvinh.com

30.4.46 Noise Detection Read Register (NSDSR)

Bit:	15	14	13	12	11	10	9	8	7	6	5	4	3	2	1	0
	ACFSTRENGTH[15:0]															
Initial value:	0	0	0	0	0	0	0	0	0	0	0	0	0	0	0	0
R/W:	R	R	R	R	R	R	R	R	R	R	R	R	R	R	R	R

Bit	Bit Name	Initial Value	R/W	Description
15 to 0	ACFSTRENGTH[15:0]	H'0000	R	Noise Autocorrelation Strength at Digital Clamp Pulse Position (normal pedestal position) When ACFLAGTIME = 0, ACFSTRENGTH almost corresponds to the noise power. Square root and logarithm of detection result almost correspond to noise amplitude and S/N (relative value), respectively.

(1) Reading Noise Autocorrelation Strength at Digital Clamp Pulse Position

ACFSTRENGTH indicates the noise correlation strength at the digital clamp pulse position (normal pedestal position).

chanhvinh.com

30.4.47 Chroma Decoding Read Register 1 (CROMASR1)

Bit:	15	14	13	12	11	10	9	8	7	6	5	4	3	2	1	0
	COLORSYS[1:0]		FSC MODE	FSC LOCK	NO BURST	ACCSUBGAIN [1:0]		ACCMAINGAIN[8:0]								
Initial value:	0	0	0	0	0	0	0	0	0	0	0	0	0	0	0	0
R/W:	R	R	R	R	R	R	R	R	R	R	R	R	R	R	R	R

Bit	Bit Name	Initial Value	R/W	Description
15, 14	COLORSYS [1:0]	00	R	Color System Detection Result 0: NTSC 1: PAL 2: SECAM 3: Undetectable
13	FSCMODE	0	R	Color Sub-Carrier Frequency Detection Result 0: 3.58 MHz 1: 4.43 MHz
12	FSCLOCK	0	R	Burst Lock PLL Lock State Detection Result 0: Unlocked 1: Locked
11	NOBURST	0	R	Color Burst Detection Result 0: Color burst present 1: No color burst present
10, 9	ACCSUB GAIN[1:0]	00	R	Current ACC Gain Value (Sub) 0: 1 time 1: 2 times 2: 4 times 3: 8 times
8 to 0	ACCMAIN GAIN[8:0]	000000000	R	Current ACC gain value (Main) The value 256 corresponds to 1 time.

chanhvinh.com

(1) Color System Detection Result Read

COLORSYS indicates the color system detection result.

(2) Color Sub-Carrier Frequency Detection Result Read

FSCMODE indicates the color sub-carrier frequency detection result.

(3) Burst Lock PLL Lock State Detection Result Read

FSCLOCK indicates the lock state detection result of the burst lock PLL.

(4) Color Burst Detection Result Read

NOBURST indicates the color burst detection result.

(5) Current ACC Gain (Sub) Value Read

ACCSUBGAIN indicates the current ACC gain (sub) value.

(6) Current ACC Gain (Main) Value Read

ACCMAINGAIN indicates the current ACC gain (main) value.

chanhvinh.com

30.4.48 Chroma Decode Read Register 2 (CROMASR2)

Bit:	15	14	13	12	11	10	9	8	7	6	5	4	3	2	1	0
	—	—	—	ISSECAM	ISPAL	ISNTSC	—	—	LOCKLEVEL[7:0]							
Initial value:	0	0	0	0	0	0	0	0	0	0	0	0	0	0	0	0
R/W:	R	R	R	R	R	R	R	R	R	R	R	R	R	R	R	R

Bit	Bit Name	Initial Value	R/W	Description
15 to 13	—	All 0	R	Reserved These bits are always read as 0. The write value should always be 0.
12	ISSECAM	0	R	SECAM Detection Result 0: Not SECAM signal 1: SECAM signal
11	ISPAL	0	R	PAL Detection Result 0: Not PAL signal 1: PAL signal
10	ISNTSC	0	R	NTSC Detection Result 0: Not NTSC signal 1: NTSC signal
9, 8	—	All 0	R	Reserved These bits are always read as 0. The write value should always be 0.
7 to 0	LOCKLEVEL [7:0]	00000000	R	Low S/N Signal Detection Result by Burst Lock PLL The larger value corresponds to a higher S/N.

(1) SECAM Signal Detection Result Read

ISSECAM indicates the SECAM signal detection result.

(2) PAL Signal Detection Result Read

ISPAL indicates the PAL signal detection result.

(3) NTSC Signal Detection Result Read

ISNTSC indicates the NTSC signal detection result.

chanhvinh.com

(4) Read of Low S/N Signal Detection Result by Burst Lock PLL

LOCKLEVEL indicates the low S/N signal detection result by the burst lock PLL.

chanhvinh.com chanhvinh.com chanhvinh.com chanhvinh.com

chanhvinh.com

30.4.49 Sync Separation Read Register (SYNCSSR)

Bit:	15	14	13	12	11	10	9	8	7	6	5	4	3	2	1	0
	—	—	—	ISREDUCED	—	—	SYNCDEPTH[9:0]									
Initial value:	0	0	0	0	0	0	0	0	0	0	0	0	0	0	0	0
R/W:	R	R	R	R	R	R	R	R	R	R	R	R	R	R	R	R

Bit	Bit Name	Initial Value	R/W	Description
15 to 13	—	All 0	R	Reserved These bits are always read as 0. The write value should always be 0.
12	ISREDUCED	0	R	Sync Amplitude Detection Result during VBI Period 0: Amplitude is larger than that in image active period. 1: Amplitude is equal to that in image active period.
11, 10	—	All 0	R	Reserved These bits are always read as 0. The write value should always be 0.
9 to 0	SYNCDEPTH[9:0]	0000000000	R	Sync Pulse Amplitude Detection Result

(1) Reading Sync Amplitude Detection Result during VBI Period

ISREDUCED indicates the sync amplitude detection result during VBI period.

(2) Reading Sync Pulse Level Amplitude Detection Result

SYNCDEPTH indicates the sync pulse amplitude detection result.

chanhvinh.com

30.4.50 AGC Control Read Register 1 (AGCCSR1)

Bit:	15	14	13	12	11	10	9	8	7	6	5	4	3	2	1	0
	HIGHSAMPLES[7:0]								PEAKSAMPLES[7:0]							
Initial value:	0	0	0	0	0	0	0	0	0	0	0	0	0	0	0	0
R/W:	R	R	R	R	R	R	R	R	R	R	R	R	R	R	R	R

Bit	Bit Name	Initial Value	R/W	Description
15 to 8	HIGHSAMPLES[7:0]	00000000	R	Number of Pixels Which Have Larger Luminance Value Than Peak Luminance Limited by Peak Limiter Indicated by 1024 pixels
7 to 0	PEAKSAMPLES[7:0]	00000000	R	Number of Overflowing Pixels Indicated by 1024 pixels

(1) Reading Number of Pixels Which Have Larger Luminance Value Than Peak Luminance Limited by Peak Limiter

HIGHSAMPLES indicates the number of pixels which have larger luminance value than the peak luminance limited by the peak limiter.

(2) Number of Overflowing Pixels

PEAKSAMPLES indicates the number of overflowing pixels.

chanhvinh.com

30.4.51 AGC Control Read Register 2 (AGCCSR2)

Bit:	15	14	13	12	11	10	9	8	7	6	5	4	3	2	1	0
	—	—	—	—	—	—	—	AGCCONVERGE	AGCGAIN[7:0]							
Initial value:	0	0	0	0	0	0	0	0	0	1	0	0	0	0	0	0
R/W:	R	R	R	R	R	R	R	R	R	R	R	R	R	R	R	R

Bit	Bit Name	Initial Value	R/W	Description
15 to 9	—	All 0	R	Reserved These bits are always read as 0. The write value should always be 0.
8	AGCCONVERGE	0	R	AGC Convergence Detection Result 0: Not converged 1: Converged
7 to 0	AGCGAIN[7:0]	01000000	R	Current AGC Gain Value The value 64 corresponds to ×1.

(1) Reading AGC Convergence Detection Result

AGCCONVERGE indicates the AGC convergence detection result.

(2) Reading Current AGC Gain

AGCGAIN indicates the current AGC gain.

chanhvinh.com

30.4.52 Y/C Separation Control Register 3 (YCSCR3)

Bit:	15	14	13	12	11	10	9	8	7	6	5	4	3	2	1	0
	K15[3:0]				K13[5:0]						K11[5:0]					
Initial value:	0	0	1	0	0	0	1	0	0	0	0	0	0	1	0	0
R/W:	R/W	R/W	R/W	R/W	R/W	R/W	R/W	R/W	R/W	R/W	R/W	R/W	R/W	R/W	R/W	R/W

Bit	Bit Name	Initial Value	R/W	Description
15 to 12	K15[3:0]	0010	R/W	Two-Dimensional Y/C Separation Filter Select Coefficient As the value becomes larger, the horizontal BPF is applied to the narrower range.
11 to 6	K13[5:0]	001000	R/W	Two-Dimensional Y/C Separation Filter Select Coefficient As the value becomes larger, the horizontal BPF is applied to the narrower range.
5 to 0	K11[5:0]	000100	R/W	Two-Dimensional Y/C Separation Filter Select Coefficient As the value becomes larger, the horizontal BPF is applied to the narrower range.

(1) Two-Dimensional Y/C Separation Filter Select Coefficient Control

K15 controls the two-dimensional Y/C separation filter select coefficient.

For details, refer to section 30.5.5 (3), Horizontal and Vertical Correlation Detection Block.

(2) Two-Dimensional Y/C Separation Filter Select Coefficient Control

K13 controls the two-dimensional Y/C separation filter select coefficient.

For details, refer to section 30.5.5 (3), Horizontal and Vertical Correlation Detection Block.

(3) Two-Dimensional Y/C Separation Filter Select Coefficient Control

K11 controls the two-dimensional Y/C separation filter select coefficient.

For details, refer to section 30.5.5 (3), Horizontal and Vertical Correlation Detection Block.

chanhvinh.com

30.4.53 Y/C Separation Control Register 4 (YCSCR4)

Bit:	15	14	13	12	11	10	9	8	7	6	5	4	3	2	1	0
	K16[3:0]				K14[5:0]						K12[5:0]					
Initial value:	0	0	1	1	0	1	0	0	0	0	0	0	0	0	0	1
R/W:	R/W	R/W	R/W	R/W	R/W	R/W	R/W	R/W	R/W	R/W	R/W	R/W	R/W	R/W	R/W	R/W

Bit	Bit Name	Initial Value	R/W	Description
15 to 12	K16[3:0]	0011	R/W	Two-Dimensional Y/C Separation Filter Select Coefficient As the value becomes larger, the horizontal BPF is applied to the narrower range.
11 to 6	K14[5:0]	010000	R/W	Two-Dimensional Y/C Separation Filter Select Coefficient As the value becomes larger, the horizontal BPF is applied to the narrower range.
5 to 0	K12[5:0]	000001	R/W	Two-Dimensional Y/C Separation Filter Select Coefficient As the value becomes larger, the horizontal BPF is applied to the narrower range.

(1) Two-Dimensional Y/C Separation Filter Select Coefficient Control

K16 controls the two-dimensional Y/C separation filter select coefficient.

For details, refer to section 30.5.5 (3), Horizontal and Vertical Correlation Detection Block.

(2) Two-Dimensional Y/C Separation Filter Select Coefficient Control

K14 controls the two-dimensional Y/C separation filter select coefficient.

For details, refer to section 30.5.5 (3), Horizontal and Vertical Correlation Detection Block.

(3) Two-Dimensional Y/C Separation Filter Select Coefficient Control

K12 controls the two-dimensional Y/C separation filter select coefficient.

For details, refer to section 30.5.5 (3), Horizontal and Vertical Correlation Detection Block.

chanhvinh.com

30.4.54 Y/C Separation Control Register 5 (YCSCR5)

Bit:	15	14	13	12	11	10	9	8	7	6	5	4	3	2	1	0
	K22A[7:0]								—	—	K21A[5:0]					
Initial value:	0	1	0	0	0	0	0	0	0	0	0	0	0	1	1	0
R/W:	R/W	R/W	R/W	R/W	R/W	R/W	R/W	R/W	R	R	R/W	R/W	R/W	R/W	R/W	R/W

Bit	Bit Name	Initial Value	R/W	Description
15 to 8	K22A[7:0]	01000000	R/W	Two-Dimensional Y/C Separation Filter Select Coefficient As the value becomes larger, the vertical BPF is applied to the narrower range.
7, 6	—	All 0	R	Reserved These bits are always read as 0. The write value should always be 0.
5 to 0	K21A[5:0]	000110	R/W	Two-Dimensional Y/C Separation Filter Select Coefficient As the value becomes larger, the vertical BPF is applied to the narrower range.

(1) Two-Dimensional Y/C Separation Filter Select Coefficient Control

K22A controls the two-dimensional Y/C separation filter select coefficient.

For details, refer to section 30.5.5 (3), Horizontal and Vertical Correlation Detection Block.

(2) Two-Dimensional Y/C Separation Filter Select Coefficient Control

K21A controls the two-dimensional Y/C separation filter select coefficient.

For details, refer to section 30.5.5 (3), Horizontal and Vertical Correlation Detection Block.

chanhvinh.com

30.4.55 Y/C Separation Control Register 6 (YCSCR6)

Bit:	15	14	13	12	11	10	9	8	7	6	5	4	3	2	1	0
	K22B[7:0]								—	—	K21B[5:0]					
Initial value:	0	0	0	1	0	0	0	0	0	0	0	0	0	1	1	0
R/W:	R/W	R/W	R/W	R/W	R/W	R/W	R/W	R/W	R	R	R/W	R/W	R/W	R/W	R/W	R/W

Bit	Bit Name	Initial Value	R/W	Description
15 to 8	K22B[7:0]	00010000	R/W	Two-Dimensional Y/C Separation Filter Select Coefficient As the value becomes larger, the vertical BPF is applied to the narrower range.
7, 6	—	All 0	R	Reserved These bits are always read as 0. The write value should always be 0.
5 to 0	K21B[5:0]	000110	R/W	Two-Dimensional Y/C Separation Filter Select Coefficient As the value becomes larger, the vertical BPF is applied to the narrower range.

(1) Two-Dimensional Y/C Separation Filter Select Coefficient Control

K22B controls the two-dimensional Y/C separation filter select coefficient.

For details, refer to section 30.5.5 (3), Horizontal and Vertical Correlation Detection Block.

(2) Two-Dimensional Y/C Separation Filter Select Coefficient Control

K21B controls the two-dimensional Y/C separation filter select coefficient.

For details, refer to section 30.5.5 (3), Horizontal and Vertical Correlation Detection Block.

chanhvinh.com

30.4.56 Y/C Separation Control Register 7 (YCSCR7)

Bit:	15	14	13	12	11	10	9	8	7	6	5	4	3	2	1	0
	K23B[3:0]				K23A[3:0]				—	—	—	K24[4:0]				
Initial value:	0	1	1	0	0	0	1	1	0	0	1	0	0	1	0	1
R/W:	R/W	R/W	R/W	R/W	R/W	R/W	R/W	R/W	R	R	R	R/W	R/W	R/W	R/W	R/W

Bit	Bit Name	Initial Value	R/W	Description
15 to 12	K23B[3:0]	0110	R/W	Two-Dimensional Y/C Separation Filter Select Coefficient As the value becomes larger, the vertical BPF is applied to the narrower range.
11 to 8	K23A[3:0]	0011	R/W	Two-Dimensional Y/C Separation Filter Select Coefficient As the value becomes larger, the vertical BPF is applied to the narrower range.
7, 6	—	All 0	R	Reserved These bits are always read as 0. The write value should always be 0.
5	—	1	R	Reserved These bits are always read as 1. The write value should always be 1.
4 to 0	K24[4:0]	00101	R/W	Two-Dimensional Y/C Separation Filter Select Coefficient As the value becomes larger, the vertical BPF is applied to the wider range.

(1) Two-Dimensional Y/C Separation Filter Select Coefficient Control

K23B controls the two-dimensional Y/C separation filter select coefficient.

For details, refer to section 30.5.5 (3), Horizontal and Vertical Correlation Detection Block.

(2) Two-Dimensional Y/C Separation Filter Select Coefficient Control

K23A controls the two-dimensional Y/C separation filter select coefficient.

For details, refer to section 30.5.5 (3), Horizontal and Vertical Correlation Detection Block.

chanhvinh.com

(3) Two-Dimensional Y/C Separation Filter Select Coefficient Control

K24 controls the two-dimensional Y/C separation filter select coefficient.

For details, refer to section 30.5.5 (3), Horizontal and Vertical Correlation Detection Block.

chanhvinh.com

30.4.57 Y/C Separation Control Register 8 (YCSCR8)

In two-dimensional Y/C separation, horizontal BPF, vertical BPF, and horizontal/vertical BPF are adaptively switched. For the horizontal BPF and horizontal/vertical BPF, horizontal properties can be selected.

Bit:	15	14	13	12	11	10	9	8	7	6	5	4	3	2	1	0
	HBPF_NARROW	HVBPF_NARROW	HBPF1_9TAP_ON	HVBPF1_9TAP_ON	HFIL_TAP_SEL	—	—	—	—	—	—	—	—	—	—	—
Initial value:	1	1	0	0	0	0	0	0	0	0	0	0	0	0	0	0
R/W:	R/W	R/W	R/W	R/W	R/W	R	R	R	R	R	R	R	R	R	R	R

Bit	Bit Name	Initial Value	R/W	Description
15	HBPF_NARROW	1	R/W	Latter-Stage Horizontal BPF Select 0: Bypass 1: 17 TAP
14	HVBPF_NARROW	1	R/W	Latter-Stage Horizontal/Vertical BPF Select 0: Bypass 1: 17 TAP
13	HBPF1_9TAP_ON	0	R/W	Former-Stage Horizontal BPF Select (when adaptively selected) 0: 17 TAP 1: 9 TAP
12	HVBPF1_9TAP_ON	0	R/W	Former-Stage Horizontal/Vertical BPF Select 0: 17 TAP 1: 9 TAP
11	HFIL_TAP_SEL	0	R/W	Horizontal Filter and Horizontal/Vertical Filter Bandwidth Switch Signal 0: 17 TAP 1: 9 TAP
10 to 0	—	All 0	R	Reserved These bits are always read as 0. The write value should always be 0.

chanhvinh.com

(1) Horizontal BPF Select Control

HBPF_NARROW selects the latter-stage horizontal BPF.

For details, refer to section 30.5.5 (2), Horizontal and Vertical Filter Block.

(2) Horizontal/Vertical BPF Select Control

HVBPF_NARROW selects the latter-stage horizontal/vertical BPF.

For details, refer to section 30.5.5 (2), Horizontal and Vertical Filter Block.

(3) Horizontal BPF (Broadband) Select Control

HBPF1_9TAP_ON selects the former-stage horizontal BPF.

For details, refer to section 30.5.5 (2), Horizontal and Vertical Filter Block.

(4) Horizontal/Vertical BPF (Broadband) Select Control

HVBPF1_9TAP_ON selects the former-stage horizontal/vertical BPF.

For details, refer to section 30.5.5 (2), Horizontal and Vertical Filter Block.

(5) Horizontal BPF Bandwidth Switch Control

HFIL_TAP_SEL switches the horizontal BPF bandwidths used for mixing.

For details, refer to section 30.5.5 (5), Horizontal and Vertical Signal Mixing Block.

chanhvinh.com

30.4.58 Y/C Separation Control Register 9 (YCSCR9)

Bit:	15	14	13	12	11	10	9	8	7	6	5	4	3	2	1	0
	DET2_ON	—	—	—	HSEL_MIX_Y[3:0]				VSEL_MIX_Y[3:0]				HVSEL_MIX_Y[3:0]			
Initial value:	1	0	0	0	0	0	0	0	0	0	0	0	0	0	0	0
R/W:	R/W	R	R	R	R/W	R/W	R/W	R/W	R/W	R/W	R/W	R/W	R/W	R/W	R/W	R/W

Bit	Bit Name	Initial Value	R/W	Description
15	DET2_ON	1	R/W	Two-Dimensional Filter Mixing Select 0: Signals are not mixed after passing the correlation detection filter. 1: Signals are mixed after passing the correlation detection filter.
14 to 12	—	All 0	R	Reserved These bits are always read as 0. The write value should always be 0.
11 to 8	HSEL_MIX_Y[3:0]	0000	R/W	Mixing Ratio of Signal after Passing Horizontal Filter to Signal after Passing Former-Stage Horizontal Filter 0: Horizontal filter 100.0% 1: Horizontal filter 87.5% to former-stage horizontal filter 12.5% 2: Horizontal filter 75.0% to former-stage horizontal filter 25.0% 3: Horizontal filter 62.5% to former-stage horizontal filter 37.5% 4: Horizontal filter 50.0% to former-stage horizontal filter 50.0% 5: Horizontal filter 37.5% to former-stage horizontal filter 62.5% 6: Horizontal filter 25.0% to former-stage horizontal filter 75.0% 7: Horizontal filter 12.5% to former-stage horizontal filter 87.5% 8: Former-stage horizontal filter 100% 9 to 15: Setting prohibited

chanhvinh.com

Bit	Bit Name	Initial Value	R/W	Description
7 to 4	VSEL_MIX_Y[3:0]	0000	R/W	Mixing Ratio of Signal after Passing Vertical Filter to Signal after Passing Former-Stage Horizontal/Vertical Filter 0: Vertical filter 100.0% 1: Vertical filter 87.5% to former-stage horizontal/vertical filter 12.5% 2: Vertical filter 75.0% to former-stage horizontal/vertical filter 25.0% 3: Vertical filter 62.5% to former-stage horizontal/vertical filter 37.5% 4: Vertical filter 50.0% to former-stage horizontal/vertical filter 50.0% 5: Vertical filter 37.5% to former-stage horizontal/vertical filter 62.5% 6: Vertical filter 25.0% to former-stage horizontal/vertical filter 75.0% 7: Vertical filter 12.5% to former-stage horizontal/vertical filter 87.5% 8: Former-stage horizontal/vertical filter 100% 9 to 15: Setting prohibited

chanhvinh.com

Bit	Bit Name	Initial Value	R/W	Description
3 to 0	HVSEL_MIX_Y[3:0]	0000	R/W	Mixing Ratio of Signal after Passing Horizontal/Vertical Filter to Signal after Passing Former-Stage Horizontal/Vertical Filter 0: Horizontal/vertical filter 100.0% 1: Horizontal/vertical filter 87.5% to former-stage horizontal/vertical filter 12.5% 2: Horizontal/vertical filter 75.0% to former-stage horizontal/vertical filter 25.0% 3: Horizontal/vertical filter 62.5% to former-stage horizontal/vertical filter 37.5% 4: Horizontal/vertical filter 50.0% to former-stage horizontal/vertical filter 50.0% 5: Horizontal/vertical filter 37.5% to former-stage horizontal/vertical filter 62.5% 6: Horizontal/vertical filter 25.0% to former-stage horizontal/vertical filter 75.0% 7: Horizontal/vertical filter 12.5% to former-stage horizontal/vertical filter 87.5% 8: Former-stage horizontal/vertical filter 100% 9 to 15: Setting prohibited

(1) Two-Dimensional Filter Mixing Select Control

DET2_ON selects two-dimensional filter mixing.

For details, refer to section 30.5.5 (5), Horizontal and Vertical Signal Mixing Block.

(2) Control of Mixing Ratio of Signal after Passing Horizontal Filter to Signal after Passing Former-Stage Horizontal Filter

HSEL_MIX_Y controls the mixing ratio of the signal after passing a horizontal filter to the signal after passing the former-stage horizontal filter.

For details, refer to section 30.5.5 (5), Horizontal and Vertical Signal Mixing Block.

chanhvinh.com

(3) Control of Mixing Ratio of Signal after Passing Vertical Filter to Signal after Passing Former-Stage Horizontal/Vertical Filter

VSEL_MIX_Y controls the mixing ratio of the signal after passing a vertical filter to the signal after passing the former-stage horizontal/vertical filter.

For details, refer to section 30.5.5 (5), Horizontal and Vertical Signal Mixing Block.

(4) Control of Mixing Ratio of Signal after Passing Horizontal/Vertical Filter to Signal after Passing Former-Stage Horizontal/Vertical Filter

HVSEL_MIX_Y controls the mixing ratio of the signal after passing a horizontal/vertical filter to the signal after passing the former-stage horizontal/vertical filter.

For details, refer to section 30.5.5 (5), Horizontal and Vertical Signal Mixing Block.

chanhvinh.com

30.4.59 Y/C Separation Control Register 11 (YCSCR11)

Bit:	15	14	13	12	11	10	9	8	7	6	5	4	3	2	1	0
	—	—	—	—	—	—	—	V_Y_LEVEL[8:0]								
Initial value:	1	1	0	1	1	0	0	0	0	0	0	0	0	0	1	1
R/W:	R	R	R	R	R	R	R	R/W	R/W	R/W	R/W	R/W	R/W	R/W	R/W	R/W

Bit	Bit Name	Initial Value	R/W	Description
15, 14	—	All 1	R	Reserved These bits are always read as 1. The write value should always be 1.
13	—	0	R	Reserved This bit is always read as 0. The write value should always be 0.
12, 11	—	All 1	R	Reserved These bits are always read as 1. The write value should always be 1.
10, 9	—	All 0	R	Reserved These bits are always read as 0. The write value should always be 0.
8 to 0	V_Y_LEVEL [8:0]	000000011	R/W	Vertical Luminance Detection Level for Correlation Detection Filter The luminance is detected when lower than the set value.

(1) Vertical Luminance Detection Level for Correlation Detection Filter

V_Y_LEVEL[8:0] select the vertical luminance detection level for correlation detection filter.

Be sure to set 0 to all the bits in this field when this module is in use.

chanhvinh.com

30.4.60 Y/C Separation Control Register 12 (YCSCR12)

During two-dimensional Y/C separation, the horizontal bandwidth can be further narrowed using the cascade horizontal BPF after horizontal BPF, vertical BPF, and horizontal/vertical BPF are switched.

Bit:	15	14	13	12	11	10	9	8	7	6	5	4	3	2	1	0
	DET2_MIX_C[3:0]				DET2_MIX_Y[3:0]				—	—	—	—	FIL2_MODE_2D[1:0]		—	FIL2_NARROW_2D
Initial value:	0	0	0	0	0	1	1	0	0	0	0	0	0	1	0	1
R/W:	R/W	R/W	R/W	R/W	R/W	R/W	R/W	R/W	R	R	R	R	R/W	R/W	R	R/W

Bit	Bit Name	Initial Value	R/W	Description
15 to 12	DET2_MIX_C[3:0]	0000	R/W	Mixing Ratio of C Signal after Passing Horizontal/Vertical Adaptive Filter to Signal after Passing Correlation Detection Filter (set 0 when DET2_ON = 0) 0: Horizontal/vertical adaptive filter 100.0% 1: Horizontal/vertical adaptive filter 87.5% to correlation detection filter 12.5% 2: Horizontal/vertical adaptive filter 75.0% to correlation detection filter 25.0% 3: Horizontal/vertical adaptive filter 62.5% to correlation detection filter 37.5% 4: Horizontal/vertical adaptive filter 50.0% to correlation detection filter 50.0% 5: Horizontal/vertical adaptive filter 37.5% to correlation detection filter 62.5% 6: Horizontal/vertical adaptive filter 25.0% to correlation detection filter 75.0% 7: Horizontal/vertical adaptive filter 12.5% to correlation detection filter 87.5% 8: Correlation detection filter 100% 9 to 15: Setting prohibited

chanhvinh.com

Bit	Bit Name	Initial Value	R/W	Description
11 to 8	DET2_MIX_Y[3:0]	0110	R/W	Mixing Ratio of C Signal for Y Generation after Passing Horizontal/Vertical Adaptive Filter to Signal after Passing Correlation Detection Filter (set 0 when DET2_ON = 0) 0: Horizontal/vertical adaptive filter 100.0% 1: Horizontal/vertical adaptive filter 87.5% to correlation detection filter 12.5% 2: Horizontal/vertical adaptive filter 75.0% to correlation detection filter 25.0% 3: Horizontal/vertical adaptive filter 62.5% to correlation detection filter 37.5% 4: Horizontal/vertical adaptive filter 50.0% to correlation detection filter 50.0% 5: Horizontal/vertical adaptive filter 37.5% to correlation detection filter 62.5% 6: Horizontal/vertical adaptive filter 25.0% to correlation detection filter 75.0% 7: Horizontal/vertical adaptive filter 12.5% to correlation detection filter 87.5% 8: Correlation detection filter 100% 9 to 15: Setting prohibited
7 to 4	—	All 0	R	Reserved These bits are always read as 0. The write value should always be 0.
3, 2	FIL2_MODE_2D[1:0]	01	R/W	Two-Dimensional Cascade/TAKE-OFF Filter Mode Select 0: Bypass 1: Cascade filter 2: TAKE-OFF filter 3: Setting prohibited
1	—	0	R	Reserved This bit is always read as 0. The write value should always be 0.
0	FIL2_NARROW_2D	1	R/W	Two-Dimensional Cascade Filter Select 0: Bypass 1: 17 TAP

chanhvinh.com

(1) Mixing Ratio of C Signal after Passing Horizontal/Vertical Adaptive Filter to Signal after Passing Correlation Detection Filter

DET2_MIX_C controls the mixing ratio of the chroma signal (after adaptation) to the signal after passing the correlation detection filter.

For details, refer to section 30.5.5 (6), Correlation Detection Value Mixing Block.

(2) Mixing Ratio of C Signal for Y Generation after Passing Horizontal/Vertical Adaptive Filter to Signal after Passing Correlation Detection Filter

For details, refer to section 30.5.5 (6), Correlation Detection Value Mixing Block.

(3) Two-Dimensional Cascade/TAKE-OFF Filter Mode Select

FIL2_MODE_2D selects the two-dimensional cascade/TAKE-OFF filter mode.

For details, refer to section 30.5.5 (8), Cascade Filter Block.

(4) Two-Dimensional Cascade Filter Select

FIL2_NARROW_2D selects the two-dimensional cascade filter.

For details, refer to section 30.5.5 (8), Cascade Filter Block.

chanhvinh.com

30.4.61 Digital Clamp Control Register 9 (DCPCR9)

Bit:	15	14	13	12	11	10	9	8	7	6	5	4	3	2	1	0
	—	—	—	CLP_HOLD_ON_Y	CLP_HOLD_ON_CB	CLP_HOLD_ON_CR	—	—	—	—	—	—	—	—	—	—
Initial value:	1	1	1	1	1	1	0	0	0	0	0	0	0	0	0	0
R/W:	R	R	R	R/W	R/W	R/W	R	R	R	R	R	R	R	R	R	R

Bit	Bit Name	Initial Value	R/W	Description
15 to 13	—	All 1	R	Reserved These bits are always read as 1. The write value should always be 1.
12	CLP_HOLD_ON_Y	1	R/W	Clamp Data Hold Processing ON/OFF (Y) 0: Hold processing ON 1: Hold processing OFF
11	CLP_HOLD_ON_CB	1	R/W	Clamp Data Hold Processing ON/OFF (Cb) 0: Hold processing ON 1: Hold processing OFF
10	CLP_HOLD_ON_CR	1	R/W	Clamp Data Hold Processing ON/OFF (Cr) 0: Hold processing ON 1: Hold processing OFF
9 to 0	—	All 0	R	Reserved These bits are always read as 0. The write value should always be 0.

(1) Clamp Data Hold Processing ON/OFF Control (Y)

CLP_HOLD_ON_Y selects ON/OFF of hold processing for Y signal clamp data.

Be sure to set 0 to this bit when this module is in use.

(2) Clamp Data Hold Processing ON/OFF Control (Cb)

CLP_HOLD_ON_CB selects ON/OFF of hold processing for Cb signal clamp data.

Be sure to set 0 to this bit when this module is in use.

chanhvinh.com

(3) Clamp Data Hold Processing ON/OFF Control (Cr)

CLP_HOLD_ON_CR selects ON/OFF of hold processing for Cr signal clamp data.

Be sure to set 0 to this bit when this module is in use.

chanhvinh.com

30.4.62 Chroma Filter TAP Coefficient (WA_F0 to WA_F8) Registers for Y/C Separation (YCTWA_F0 to YCTWA_F8)

Bit:	15	14	13	12	11	10	9	8	7	6	5	4	3	2	1	0
	—	—	—	FIL2_2D_WA_F0 to FIL2_2D_WA_F8[12:0]												
Initial value:	0	0	0	*	*	*	*	*	*	*	*	*	*	*	*	*
R/W:	R	R	R	R/W	R/W	R/W	R/W	R/W	R/W	R/W	R/W	R/W	R/W	R/W	R/W	R/W

Bit	Bit Name	Initial Value	R/W	Description
15 to 13	—	All 0	R	Reserved These bits are always read as 0. The write value should always be 0.
12 to 0	FIL2_2D_WA_F0 to FIL2_2D_WA_F8 [12:0]	*	R/W	Two-Dimensional Cascade Broadband (3.58/4.43/SECAM-DR)/TAKE-OFF Filter TAP Coefficient 0 to 8 [12]: Sign [11:0]: Absolute value

Note: * Initial values:
FIL2_2D_WA_F0: H'0018
FIL2_2D_WA_F1: H'002C
FIL2_2D_WA_F2: H'0014
FIL2_2D_WA_F3: H'1034
FIL2_2D_WA_F4: H'1080
FIL2_2D_WA_F5: H'1080
FIL2_2D_WA_F6: H'100C
FIL2_2D_WA_F7: H'0084
FIL2_2D_WA_F8: H'00C8

chanhvinh.com

(1) Two-Dimensional Cascade Broadband (3.58/4.43/SECAM-DR)/TAKE-OFF Filter TAP Coefficient 0 to 8 Control

FIL2_2D_WA_F0 controls two-dimensional cascade broadband (3.58/4.43/SECAM-DR)/TAKE-OFF filter TAP coefficient 0 to 8.

The transfer function is defined as follows:

$$H(z) = \{F0(z^{-8} + z^{+8}) + F1(z^{-7} + z^{+7}) + F2(z^{-6} + z^{+6}) + F3(z^{-5} + z^{+5}) + F4(z^{-4} + z^{+4}) + F5(z^{-3} + z^{+3}) + F6(z^{-2} + z^{+2}) + F0(z^{-1} + z^{+1}) + F8(z^{0})\} /1024$$

The coefficient value is represented using the MSB for a sign and the other bits for the effective value in the absolute value.

Table 30.31 TAP Coefficient Settings

Most Significant Bit	Other Than MSB	Setting Value
0	0 to 4095	+0 to +4095
1	0 to 4095	–0 to –4095

For the recommended setting value for each filter, see section 30.5.5 (8), Cascade Filter Block.

chanhvinh.com

30.4.63 Chroma Filter TAP Coefficient (WB_F0 to WB_F8) Registers for Y/C Separation (YCTWB_F0 to YCTWB_F8)

Bit:	15	14	13	12	11	10	9	8	7	6	5	4	3	2	1	0
	—	—	—	FIL2_2D_WB_F0 to FIL2_2D_WB_F8[12:0]												
Initial value:	0	0	0	*	*	*	*	*	*	*	*	*	*	*	*	*
R/W:	R	R	R	R/W	R/W	R/W	R/W	R/W	R/W	R/W	R/W	R/W	R/W	R/W	R/W	R/W

Bit	Bit Name	Initial Value	R/W	Description
15 to 13	—	All 0	R	Reserved These bits are always read as 0. The write value should always be 0.
12 to 0	FIL2_2D_WB_F0 to FIL2_2D_WB_F8[12:0]	*	R/W	Two-Dimensional Cascade Broadband (SECAM-DB) Filter TAP Coefficient 0 to 8 [12]: Sign [11:0]: Absolute value

Note: * Initial values:
FIL2_2D_WB_F0: H'100C
FIL2_2D_WB_F1: H'0028
FIL2_2D_WB_F2: H'003C
FIL2_2D_WB_F3: H'000C
FIL2_2D_WB_F4: H'1068
FIL2_2D_WB_F5: H'109C
FIL2_2D_WB_F6: H'1040
FIL2_2D_WB_F7: H'0078
FIL2_2D_WB_F8: H'00D0

chanhvinh.com

(1) Two-Dimensional Cascade Broadband (SECAM-DB) Filter TAP Coefficient 0 to 8 Control

FIL2_2D_WB_F0 controls two-dimensional cascade broadband (SECAM-DB) filter TAP coefficient 0 to 8.

The transfer function is defined as follows:

$$H(z) = \{F0(z^{-8} + z^{+8}) + F1(z^{-7} + z^{+7}) + F2(z^{-6} + z^{+6}) + F3(z^{-5} + z^{+5}) + F4(z^{-4} + z^{+4}) + F5(z^{-3} + z^{+3}) + F6(z^{-2} + z^{+2}) + F0(z^{-1} + z^{+1}) + F8(z^{0})\} /1024$$

The coefficient value is represented using the MSB for a sign and the other bits for the effective value in the absolute value.

Table 30.32 TAP Coefficient Settings

Most Significant Bit	Other Than MSB	Setting Value
0	0 to 4095	+0 to +4095
1	0 to 4095	–0 to –4095

For the recommended setting value for each filter, see section 30.5.5 (8), Cascade Filter Block.

chanhvinh.com

30.4.64 Chroma Filter TAP Coefficient (NA_F0 to NA_F8) Registers for Y/C Separation (YCTNA_F0 to YCTNA_F8)

Bit:	15	14	13	12	11	10	9	8	7	6	5	4	3	2	1	0
	—	—	—	FIL2_2D_NA_F0 to FIL2_2D_NA_F8[12:0]												
Initial value:	0	0	0	*	*	*	*	*	*	*	*	*	*	*	*	*
R/W:	R	R	R	R/W	R/W	R/W	R/W	R/W	R/W	R/W	R/W	R/W	R/W	R/W	R/W	R/W

Bit	Bit Name	Initial Value	R/W	Description
15 to 13	—	All 0	R	Reserved These bits are always read as 0. The write value should always be 0.
12 to 0	FIL2_2D_NA_F0 to FIL2_2D_NA_F8[12:0]	*	R/W	Two-Dimensional Cascade Narrowband (3.58/4.43/SECAM-DR) Filter TAP Coefficient 0 to 8 [12]: Sign [11:0]: Absolute value

Note: * Initial values:
FIL2_2D_NA_F0: H'0018
FIL2_2D_NA_F1: H'002C
FIL2_2D_NA_F2: H'0014
FIL2_2D_NA_F3: H'1034
FIL2_2D_NA_F4: H'1080
FIL2_2D_NA_F5: H'1080
FIL2_2D_NA_F6: H'100C
FIL2_2D_NA_F7: H'0084
FIL2_2D_NA_F8: H'00C8

chanhvinh.com

(1) Two-Dimensional Cascade Narrowband (3.58/4.43/SECAM-DR) Filter TAP Coefficient 0 to 8 Control

FIL2_2D_NA_F0 controls two-dimensional cascade narrowband (3.58/4.43/SECAM-DR) filter TAP coefficient 0 to 8.

The transfer function is defined as follows:

$$H(z) = \{F0(z^{-8} + z^{+8}) + F1(z^{-7} + z^{+7}) + F2(z^{-6} + z^{+6}) + F3(z^{-5} + z^{+5}) + F4(z^{-4} + z^{+4}) + F5(z^{-3} + z^{+3}) + F6(z^{-2} + z^{+2}) + F0(z^{-1} + z^{+1}) + F8(z^{0})\} /1024$$

The coefficient value is represented using the MSB for a sign and the other bits for the effective value in the absolute value.

Table 30.33 TAP Coefficient Settings

Most Significant Bit	Other Than MSB	Setting Value
0	0 to 4095	+0 to +4095
1	0 to 4095	–0 to –4095

For the recommended setting value for each filter, see section 30.5.5 (8), Cascade Filter Block.

chanhvinh.com

30.4.65 Chroma Filter TAP Coefficient (NB_F0 to NB_F8) Registers for Y/C Separation (YCTNB_F0 to YCTNB_F8)

Bit:	15	14	13	12	11	10	9	8	7	6	5	4	3	2	1	0
	—	—	—	FIL2_2D_NB_F0 to FIL2_2D_NB_F8[12:0]												
Initial value:	0	0	0	*	*	*	*	*	*	*	*	*	*	*	*	*
R/W:	R	R	R	R/W	R/W	R/W	R/W	R/W	R/W	R/W	R/W	R/W	R/W	R/W	R/W	R/W

Bit	Bit Name	Initial Value	R/W	Description
15 to 13	—	All 0	R	Reserved These bits are always read as 0. The write value should always be 0.
12 to 0	FIL2_2D_NB_F0 to FIL2_2D_NB_F8[12:0]	*	R/W	Two-Dimensional Cascade Narrowband (SECAM-DB) Filter TAP Coefficient 0 to 8 [12]: Sign [11:0]: Absolute value

Note: * Initial values:
FIL2_2D_NB_F0: H'1438
FIL2_2D_NB_F1: H'0AF0
FIL2_2D_NB_F2: H'1CEC
FIL2_2D_NB_F3: H'065C
FIL2_2D_NB_F4: H'05A4
FIL2_2D_NB_F5: H'1CEC
FIL2_2D_NB_F6: H'085C
FIL2_2D_NB_F7: H'0178
FIL2_2D_NB_F8: H'1568

chanhvinh.com

(1) Two-Dimensional Cascade Narrowband (SECAM-DB) Filter TAP Coefficient 0 to 8 Control

FIL2_2D_NB_F0 controls two-dimensional cascade narrowband (SECAM-DB) filter TAP coefficient 0 to 8.

The transfer function is defined as follows:

$$H(z) = \{F0(z^{-8} + z^{+8}) + F1(z^{-7} + z^{+7}) + F2(z^{-6} + z^{+6}) + F3(z^{-5} + z^{+5}) + F4(z^{-4} + z^{+4}) + F5(z^{-3} + z^{+3}) + F6(z^{-2} + z^{+2}) + F0(z^{-1} + z^{+1}) + F8(z^{0})\} /1024$$

The coefficient value is represented using the MSB for a sign and the other bits for the effective value in the absolute value.

Table 30.34 TAP Coefficient Settings

Most Significant Bit	Other Than MSB	Setting Value
0	0 to 4095	+0 to +4095
1	0 to 4095	–0 to –4095

For the recommended setting value for each filter, see section 30.5.5 (8), Cascade Filter Block.

chanhvinh.com

30.4.66 Luminance (Y) Signal Gain Control Register (YGAINCR)

Bit:	15	14	13	12	11	10	9	8	7	6	5	4	3	2	1	0
	—	—	—	—	—	—	Y_GAIN2[9:0]									
Initial value:	0	0	0	0	0	0	1	0	0	0	0	0	0	0	0	0
R/W:	R	R	R	R	R	R	R/W	R/W	R/W	R/W	R/W	R/W	R/W	R/W	R/W	R/W

Bit	Bit Name	Initial Value	R/W	Description
15 to 10	—	All 0	R	Reserved These bits are always read as 0. The write value should always be 0.
9 to 0	Y_GAIN2 [9:0]	1000000000	R/W	Y Signal Gain Coefficient (0 = 0 times, 512 = 1.0 times, 1023 ≈ 2.0 times)

(1) Y Signal Output Gain Control

Y_GAIN2 controls the Y signal output gain.

Y signal output = Y signal after decoding × (Y_GAIN/512)

chanhvinh.com

30.4.67 Color Difference (Cb) Signal Gain Control Register (CBGAINCR)

Bit:	15	14	13	12	11	10	9	8	7	6	5	4	3	2	1	0
	—	—	—	—	—	—	CB_GAIN2[9:0]									
Initial value:	0	0	0	0	0	0	1	0	0	0	0	0	0	0	0	0
R/W:	R	R	R	R	R	R	R/W	R/W	R/W	R/W	R/W	R/W	R/W	R/W	R/W	R/W

Bit	Bit Name	Initial Value	R/W	Description
15 to 10	—	All 0	R	Reserved These bits are always read as 0. The write value should always be 0.
9 to 0	CB_GAIN2 [9:0]	1000000000	R/W	Cb Signal Gain Coefficient (0 = 0 times, 512 = 1.0 times, 1023 ≈ 2.0 times)

(1) Cb Signal Output Gain Control

CB_GAIN2 controls the Cb signal output gain.

Cb signal output = Cb signal after decoding × (CB_GAIN/512)

chanhvinh.com

30.4.68 Color Difference (Cr) Signal Gain Control Register (CRGAINCR)

Bit:	15	14	13	12	11	10	9	8	7	6	5	4	3	2	1	0
	—	—	—	—	—	—	CR_GAIN2[9:0]									
Initial value:	0	0	0	0	0	0	1	0	0	0	0	0	0	0	0	0
R/W:	R	R	R	R	R	R	R/W	R/W	R/W	R/W	R/W	R/W	R/W	R/W	R/W	R/W

Bit	Bit Name	Initial Value	R/W	Description
15 to 10	—	All 0	R	Reserved These bits are always read as 0. The write value should always be 0.
9 to 0	CR_GAIN2 [9:0]	1000000000	R/W	Cr Signal Gain Coefficient (0 = 0 times, 512 = 1.0 times, 1023 ≈ 2.0 times)

(1) Cr Signal Output Gain Control

CR_GAIN2 controls the Cr signal output gain.

Cr signal output = Cr signal after decoding × (CR_GAIN/512)

chanhvinh.com

30.4.69 PGA Register Update (PGA_UPDATE)

Bit:	15	14	13	12	11	10	9	8	7	6	5	4	3	2	1	0
	—	—	—	—	—	—	—	—	—	—	—	—	—	—	—	PGA_VEN
Initial value:	0	0	0	0	0	0	0	0	0	0	0	0	0	0	0	1
R/W:	R	R	R	R	R	R	R	R	R	R	R	R	R	R	R	R/W

Bit	Bit Name	Initial Value	R/W	Description
15 to 1	—	All 0	R	Reserved These bits are always read as 0. The write value should always be 0.
0	PGA_VEN	1	R/W	PGACR Register V Update Enable 1: Enable 0: Disable

(1) PGACR Register V Update Enable

PGA_VEN enables or disables V update of PGACR register.

chanhvinh.com

30.4.70 PGA Control Register (PGACR)

Bit:	15	14	13	12	11	10	9	8	7	6	5	4	3	2	1	0
	—	—	PGA_GAIN_SEL	PGA_GAIN[4:0]					—	—	—	—	—	—	—	—
Initial value:	0	0	0	0	1	0	0	0	0	0	0	0	1	0	0	0
R/W:	R	R	R/W	R/W	R/W	R/W	R/W	R/W	R	R	R	R	R	R	R	R

Bit	Bit Name	Initial Value	R/W	Description
15, 14	—	All 0	R	Reserved These bits are always read as 0. The write value should always be 0.
13	PGA_GAIN_SEL	0	R/W	PGA Switch 0: Automatic (AGC) 1: Manual (refer to the PGA_GAIN description below.)
12 to 8	PGA_GAIN[4:0]	01000	R/W	PGA Gain 0 (0.8 Vpp) to 31 (1.6 Vpp)
7 to 4	—	All 0	R	Reserved These bits are always read as 0. The write value should always be 0.
3	—	1	R	Reserved This bit is always read as 1. The write value should always be 1.
2 to 0	—	All 0	R	Reserved These bits are always read as 0. The write value should always be 0.

Note: All the bits in this register are updated when the vertical sync signal is asserted with PGA_VEN in PGA_UPDATE being 1.

(1) PGA Switch

When PGA_GAIN_SEL is 0 and ADCCR1.AGCMODE is 1, the AGC-controlled value is reflected on the PGA gain. When PGA_GAIN_SEL is 1, the PGA_GAIN value is directly reflected on the PGA gain. In this case, the ADCCR1.AGCMODE setting is invalid.

Setting ADCCR1.AGCMODE to 0 and PGA_GAIN_SEL to 0 simultaneously is prohibited.

chanhvinh.com

(2) PGA Gain

When PGA_GAIN_SEL is 1, the PGA_GAIN value is reflected on the PGA gain. One of 32 levels of gain values can be set for the PGA of this LSI.

chanhvinh.com

30.4.71 ADC Control Register 2 (ADCCR2)

Bit:	15	14	13	12	11	10	9	8	7	6	5	4	3	2	1	0
	—	—	—	—	—	—	—	—	—	—	—	—	—	—	—	ADC_VINSEL
Initial value:	0	0	0	0	0	0	0	1	0	0	0	0	0	0	0	0
R/W:	R	R	R	R	R	R	R	R	R	R	R	R	R	R	R	R/W

Bit	Bit Name	Initial Value	R/W	Description
15 to 9	—	All 0	R	Reserved These bits are always read as 0. The write value should always be 0.
8	—	1	R	Reserved This bit is always read as 1. The write value should always be 1.
7 to 1	—	All 0	R	Reserved These bits are always read as 0. The write value should always be 0.
0	ADC_VINSEL	0	R/W	Input Pin Control 0: VIN1 input 1: VIN2 input

(1) Input Pin Control

ADC_VINSEL selects the pin for inputting composite video signals.

chanhvinh.com

30.5 Operation

30.5.1 Overview

This module decodes composite video signals (CVBS) and separates them into horizontal/vertical sync signals, luminance signals (Y), and color difference signals (Cb/Cr). Supported color systems are NTSC, PAL, and SECAM. This module consists of an A/D converter for video signal input, sync separator circuit, burst controlled oscillator (BCO), a Y/C separator circuit, a chroma decoding circuit, a digital clamp circuit, and an output gain adjustment circuit. Figure 30.25 shows an overall block diagram.

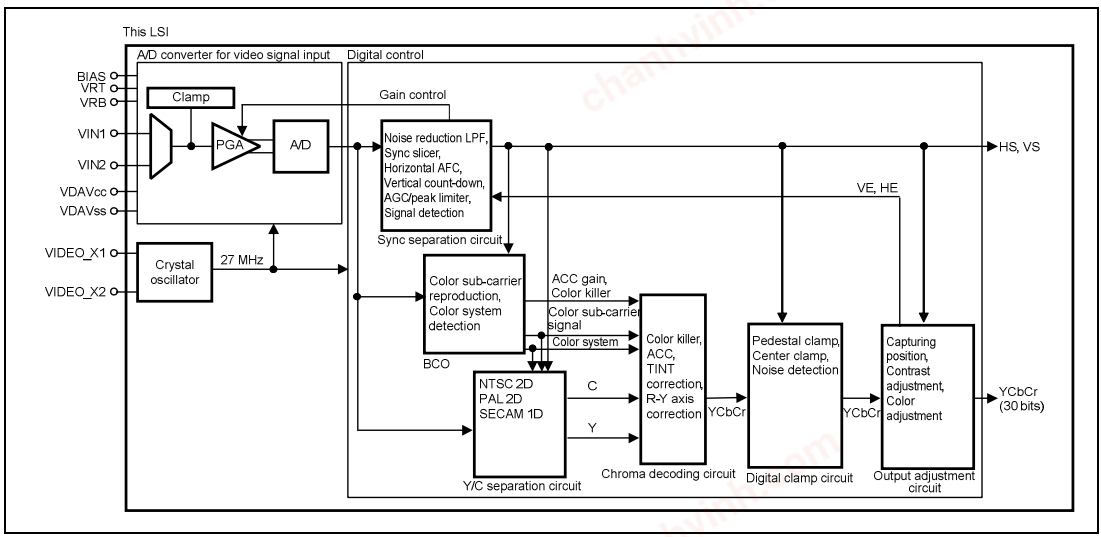

Figure 30.25 Overall Block Diagram

(1) A/D Converter for Video Signal Input

The A/D converter processes the composite video signal (CVBS) using the sync tip clamp block and the programmable gain amplifier (PGA) and A/D-converts the signal. The composite video signals from either VIN1 or VIN2 pin are selected.

(2) Sync Separator Circuit

The sync separator circuit extracts the horizontal and vertical sync signals from the composite video signal. This circuit also detects the amplitude of the sync signals and automatically adjusts the PGA gain (automatic gain control = AGC).

chanhvinh.com

(3) Burst Controlled Oscillator (BCO)

The BCO extracts the color burst signal from the composite video signal and reproduces the color sub-carrier signal required for color demodulation. The BCO also acquires phase and frequency information from the color burst signal and detects the color system used.

(4) Y/C Separator Circuit

The Y/C separator circuit separates the composite video signal of the NTSC, PAL, or SECAM format into the Y and C signals. Two-dimensional adaptive separation is used for NTSC and PAL and one-dimensional separation for SECAM.

(5) Chroma Decoding Circuit

The chroma decoding circuit demodulates the C signal extracted by the Y/C separator circuit into the Cb/Cr signal. This circuit has the automatic color control function (ACC), in which the amplitude of the color burst signal is detected to adjust the color gain automatically and also has the TINT/R-Y axis correction function, in which hue is adjusted at demodulation.

(6) Digital Clamp Circuit

The digital clamp circuit provides pedestal clamp for the Y signals and center clamp for the Cb/Cr signals at any position. This circuit also detects the amount of noise using the autocorrelation function.

(7) Output Adjustment Circuit

The output adjustment circuit sets the capturing position and adjusts the contrast and color.

chanhvinh.com

30.5.2 A/D Converter for Video Signal Input

The A/D converter processes the composite video signal (CVBS) using the sync tip clamp block and the programmable gain amplifier (PGA) and A/D-converts the signal.

Figure 30.26 shows the block diagram of the A/D converter for video signal input.

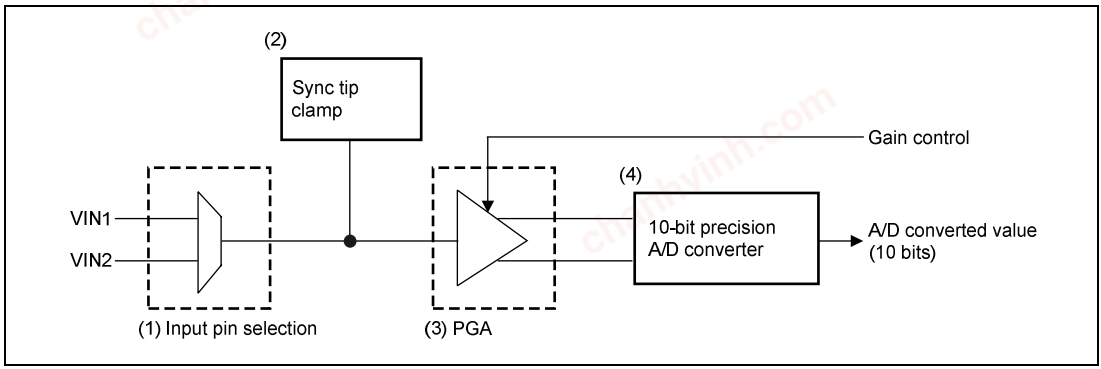

Figure 30.26 Block Diagram of A/D Converter for Video Signal Input

Figure 30.27 shows the waveforms when a video signal is A/D-converted.

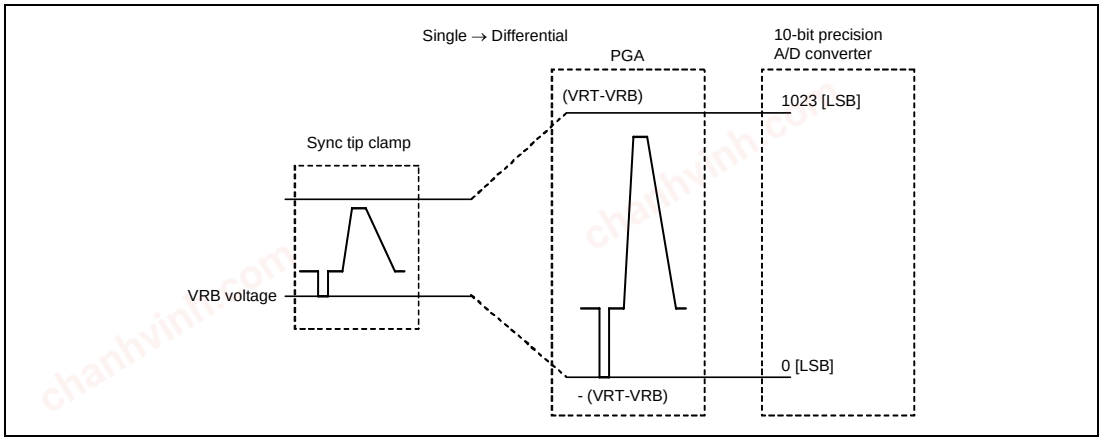

Figure 30.27 A/D Conversion Image

(1) Input Pin Selection Block

The input pin selection block selects either the VIN1 or VIN2 pin for inputting the signal according to the ADCCR2.ADC_VINSEL setting.

chanhvinh.com

(2) Sync Tip Clamp Block

The sync tip clamp block clamps the sync tip level to the VRB voltage (≈ 1.0 V).

(3) Programmable Gain Amplifier (PGA)

The PGA adjusts the gain so that the input video signal voltage (≈ 0.8 Vpp to 1.6 Vpp) should be the level to be input to the A/D converter (≈ 2.0 Vpp). One of 32 levels of gain values can be set. One level corresponds to gain of 0.2 dB (typ.). The minimum gain is 1.835 dB (typ.) and maximum gain is 8.023 dB (typ.).

Table 30.35 shows the PGA gain setting and gain values.

Table 30.35 PGA Gain Setting and Gain Values (dB)

PGA Gain Setting	Input Range (Vpp)	Gain Value (dB)
0	1.619	1.835
1	1.585	2.021
2	1.551	2.206
3	1.519	2.392
4	1.486	2.579
5	1.455	2.766
6	1.423	2.954
7	1.393	3.142
8	1.363	3.322
9	1.333	3.522
:	:	:
27	0.879	7.143
28	0.857	7.360
29	0.836	7.578
30	0.815	7.799
31	0.794	8.023

The PGA gain can be set using PGACR.PGA_GAIN[4:0] with PGACR.PGA_GAIN_SEL = 1. When the AGC function is on (ADCCR1.AGCMODE = 1), the gain is automatically set.

chanhvinh.com

(4) 10-Bit Precision A/D Converter

The 10-bit precision A/D converter receives the gain-adjusted video signal from the PGA and A/D-converts the signal. The converter has 10-bit resolution and performs sampling at 27 MHz, which is the frequency of the clock signal input via VIDEO_X1 or VIDEO_X2.

chanhvinh.com

30.5.3 Sync Separator Circuit

The sync separator circuit extracts the horizontal and vertical sync signals from the composite video signal. This circuit also detects the amplitude of the sync signals and automatically adjusts the PGA gain (automatic gain control = AGC).

Figure 30.28 shows the block diagram of the sync separator circuit.

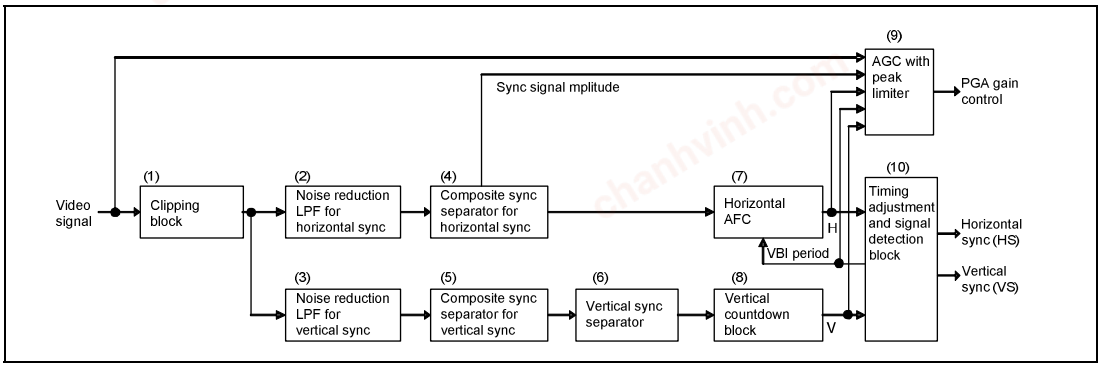

Figure 30.28 Block Diagram of Sync Separator Circuit

(1) Clipping Block

The clipping block clips the high tone component of the video signal to reduce amplitude-dependency of the video signal. The specific clipping level can be set using SYNSCR3.SSCLIPSEL[3:0].

The clipping level should be within the range so that the composite sync signal component should not be deteriorated (should be detectable).

(2) Noise Reduction Low-Pass Filter (LPF) for Horizontal Sync

The noise reduction LPF reduces the superimposed noise on the video signals before composite sync signal separation. The LPFs can be separately set for the horizontal sync and vertical sync. The cutoff frequency of the horizontal sync LPF can be set using SYNSCR1.LPFHSYNC[2:0]. The cutoff frequency should be within a range that assures that the composite sync signal components are not degraded (are detectable).

(3) Noise Reduction Low-Pass Filter (LPF) for Vertical Sync

The noise reduction LPF reduces the superimposed noise on the video signals before composite sync signal separation. The LPFs can be separately set for the horizontal sync and vertical sync. The cutoff frequency of the vertical sync LPF can be set using SYNCSCR1.LPFVSYNC[2:0]. The

chanhvinh.com

cutoff frequency should be within a range that assures that the composite sync signal components are not degraded (are detectable).

(4) Composite Sync Separator for Horizontal Sync

The composite sync separator separates the composite sync signal from the video signal according to the slice level. The composite sync slice levels can be separately set for the vertical and vertical sync signals. The slice level can be set either automatically or manually according to the SYNSCR1.SLICERMODE_H[1:0] setting.

When automatic setting is used, the slice level is automatically set according to the SYNSCR1.SLICERMODE_H[1:0], SYNSCR2.SYNCMAXDUTY_H[5:0], and SYNSCR2.SYNCMINDUTY_H[5:0] setting. The slice level detection speed can be set using SYNSCR1.VELOCITYSHIFT_H[3:0].

When manual setting is used, the slice level is determined by SYNSCR3.CSYNCSLICE_H[9:0].

(5) Composite Sync Separator for Vertical Sync

The composite sync separator separates the composite sync signal from the video signal according to the slice level. The composite sync slice levels can be separately set for the vertical and vertical sync signals. The slice level can be set either automatically or manually according to the SYNSCR1.SLICERMODE_V[1:0] setting.

When automatic setting is used, the slice level is automatically set according to the SYNSCR1.SLICERMODE_V[1:0], SYNSCR4.SYNCMAXDUTY_H[5:0], and SYNSCR4.SYNCMINDUTY_H[5:0] setting.

When manual setting is used, the slice level is determined by SYNSCR5.CSYNCSLICE_V[9:0].

(6) Vertical Sync Separator

The vertical sync separator extracts the vertical sync signal from the composite video signal separated using (5) above. The threshold value for separating the vertical sync signal can be set using SYNSCR5.VSYNCSLICE[4:0]. The value should be set depending on the serration pulse width of each video signal format.

chanhvinh.com

(7) Horizontal Automatic Frequency Control (AFC) Block

The horizontal AFC, which is a digital PLL, extracts the horizontal sync signal from the composite video signal separated using (4) above. The AFC removes the pseudo horizontal sync signal and interpolates the incomplete horizontal sync signal to generate a stable horizontal sync signal.

The center frequency and lock range of the horizontal AFC can be set using HAFCCR1.HAFCTYP[9:0], HAFCCR2.HAFCMAX[9:0], and HAFCCR3.HAFCMIN[9:0]. If the horizontal AFC is locked, VSYNCSR.FHLOCK becomes 1; and if the horizontal AFC is unlocked, VSYNCSR.FHLOCK becomes 0. The horizontal AFC oscillation cycle can be checked by reading HSYNCSR.FHCOUNT[16:1] and VSYNCSR.FHCOUNT[0].

The loop gain (response speed) of the horizontal AFC can be set using HAFCCR1.HAFCCGAIN[3:0]. As the speed is increased, the lockup time becomes shorter. However, the horizontal oscillation frequency will be more susceptible to noise. With HAFCCR3.HAFCMODE[1], AFCPFCR.PHDET_FIX, and AFCPFCR.PHDET_DIV[2:0], the loop gain can be reduced when S/N is low to prevent malfunction attributed to noise. Whether S/N is low or not can be checked with VSYNCSR.ISNOISY.

The loop gain during the vertical blanking period (VBI) can be set using HAFCCR2.HAFCSTART[3:0], HAFCCR3.HAFCEND[3:0], and HAFCCR3.HAFCMODE[0]. This is usually used to avoid malfunction in the VCR head switch.

(8) Vertical Countdown Block

The vertical countdown block removes the pseudo vertical sync signal from the vertical sync signal separated using (6) above and interpolates the incomplete vertical sync signal to generate a stable vertical sync signal.

The oscillation cycle of the vertical countdown block can be set using VCDWCR1.VCDDEFAULT[1:0]. When set to 0, the input vertical sync signal is detected and the oscillation cycle is automatically set appropriately. The detection result of the input vertical sync signal is indicated by VSYNCSR.FVMODE. When set to 1, 50.00-Hz oscillation mode is set. Here, it is recommended to set VCDWCR1.NOVCD60 to 1 (60-Hz oscillation off) to avoid unexpected malfunction. When set to 2 or 3, 59.94-/60.00-Hz oscillation mode is set. Here, it is recommended to set VCDWCR1.NOVCD50 to 1 (50-Hz oscillation off) to avoid unexpected malfunction.

The lock range of the vertical countdown block can be set using VCDWCR1.VCDWINDOW[5:0] and VCDWCR1.VCDOFFSET[4:0]. If the vertical countdown block is locked, VSYNCSR.FVLOCK becomes 1; and if the vertical countdown block is unlocked, VSYNCSR.FVLOCK becomes 0.

chanhvinh.com

The cycle of the input vertical sync signal can be checked by reading VSYNCSR.FVCOUNT[7:0]. When the vertical sync signal input cannot be detected, VSYNCSR.NOSIGNAL is set to 1.

(9) Automatic Gain Control (AGC) Block with Peak Limiter

The AGC block detects the amplitude of the sync signal and automatically controls the PGA gain to the target value. The AGC function is activated with ADCCR1.AGCMODE = 1.

- Gain Control according to Sync Amplitude

  The target sync signal amplitude can be set using AGCCR1.AGCLEVEL[8:0] and AGCCR2.AGCPRECIS[5:0]. For example, when NTSC signals are quantized by the 10-bit A/D converter, the sync signal amplitude for the full range of the A/D converter can be provided by:

  $$1023[\mathrm{LSB}] \times (40[\mathrm{IRE}] \div 173[\mathrm{IRE}]) = 236.53179[\mathrm{LSB}]$$

  Therefore, 236[LSB] should be set to AGCCR1.AGCLEVEL[8:0]. The gain is fixed when it falls within the following range.

  $$\text{Target value (= AGCCR1.AGCLEVEL[8:0])} \pm \text{AGCCR2.AGCPRECISE[5:0]}$$

  Whether the gain is fixed or not can be checked by reading AGCCR2.AGCCONVERGE. The detected sync signal amplitude can be checked using SYNCSSR.SYNCDEPTH[9:0]. The AGC response speed can be set using AGCCR1.AGCRESOPONSE[2:0]. As the speed is increased, the input signal is tracked more quickly; however, it will result in more susceptibleness to noise.

  The currently set gain value can be checked using AGCCSR2.AGCGAIN[7:0]. The actual PGA gain setting can be roughly calculated as follows:

  $$0.585776 \times (\text{AGCCSR2.AGCGAIN[7:0]} - 49)$$

  For example, when AGCCSR2.AGCGAIN[7:0] is 64 (corresponding to ×1),

  $$\text{PGA gain setting} = 0.585776 \times (64 - 49) \approx 8.78$$

  As a result, the PGA gain setting is 8 or 9. One of 0 to 31 can be set as the PGA gain value.

  The gain during vertical blanking period (VBI) can be set using AGCCR1.DOREDUCE and AGCCR1.NOREDUCE. The sync amplitude detection result during VBI can be read from SYNCSSR.ISREDUCED.

chanhvinh.com

- Peak Limiter

  The peak limiter works when the ratio of the video signal amplitude to the sync signal amplitude is inappropriate. If the ratio is smaller than expected, the PGA gain becomes smaller, and the video signal after gain adjustment becomes smaller than the full range of the A/D converter. Contrarily, if the ratio is larger than expected, the PGA gain becomes larger, and the video signal after gain adjustment becomes larger than the full range of the A/D converter.

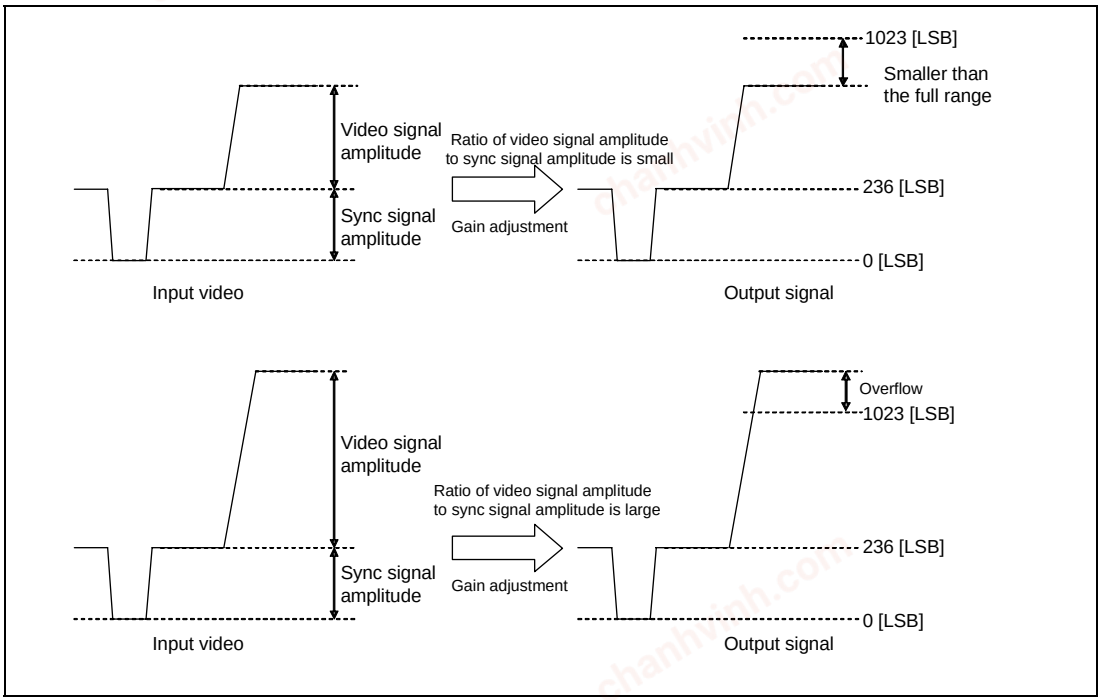

Figure 30.29 Cases in which Ratio of Video Signal Amplitude to Sync Signal Amplitude is Inappropriate

To deal with this problem, the peak limiter adjusts the PGA gain based on the sampled video signal peak value. The peak value used to control the gain can be set using PKLIMITCR.PEAKLEVEL[1:0]. When the peak value of the sampled video signal is smaller than the value set using PKLIMITCR.PEAKLEVEL[1:0], the gain is increased. Contrarily, when the peak value of the sampled video signal is larger than the value set using PKLIMITCR.PEAKLEVEL[1:0] exceeding the maximum allowable value set using PKLIMITCR.MAXPEAKSAMPLES[7:0], the gain is decreased.

chanhvinh.com

The gain increase/decrease response speed and maximum compression ratio can be set using PKLIMITCR.PEAKATTACK[1:0], PKLIMITCR.PEAKRELEASE[1:0], and PKLIMITCR.PEAKRATIO[1:0]. The number of pixels with the peak value larger than the value set using PKLIMITCR.PEAKLEVEL[1:0] can be checked with AGCCSR1.HIGHSAMPLES[7:0]; and the number of overflowing pixels (exceeding 1023[LSB]) can be checked with AGCCSR1.PEAKSAMPLES[7:0].

- Manual Setting

  Manual setting of the PGA gain can be enabled by setting PGACR.PGA_GAIN_SEL to 1. Here, the value set using PGACR.PGA_GAIN[4:0] is actually set as the PGA gain. When PGACR.PGA_GAIN_SEL is 1, ADCCR1.AGCMODE setting is invalid. Setting PGACR.PGA_GAIN_SEL to 0 (automatic setting) and ADCCR1.AGCMODE to 0 (AGC off) simultaneously is prohibited.

(10) Timing Adjustment and Signal Detection Block

The timing adjustment and signal detection block adjusts the output timing of the horizontal and vertical sync signals generated using (7) and (8) above. This block also detects the field; whether the interlaced or progressive system is used can be checked with VSYNCSR.INTERLACED. If the field detection function is unstable, setting SYNSCR5.VSYNCDELAY to 1 may improve the function.

30.5.4 Burst Controlled Oscillator (BCO)

The BCO extracts the color burst signal from the composite video signal and reproduces the color sub-carrier signal required for color demodulation. It also acquires the phase and frequency information from the color burst signal and detects the color system used.

Figure 30.30 shows the block diagram of the BCO.

chanhvinh.com

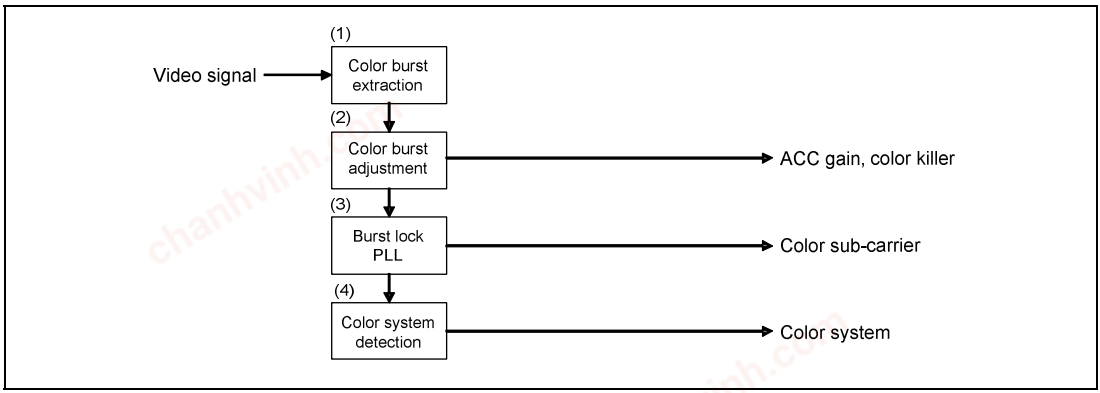

Figure 30.30 Block Diagram of Burst Controlled Oscillator

(1) Color Burst Extraction Block

The color burst extraction block extracts the color burst signal. The position of the color burst signal to be extracted can be adjusted using BTGPCR.BGPWIDTH[6:0] and BTGPCR.BGPSTART[7:0]. The extraction result of the color burst signal can be checked by reading CROMASR1.NOBURST.

(2) Color Burst Adjustment Block

The color burst adjustment block adjusts the amplitude of the extracted color burst signal. For details, refer to section 30.5.6 (1), Automatic Color Control (ACC) Block. This block also outputs the signal to turn on or off the color killer according to the amplitude of the input color burst signal. For details, refer to section 30.5.6 (2), Color Killer.

(3) Burst Lock PLL

The burst lock PLL is a digital PLL which reproduces the color sub-carrier signal from the adjusted color signal.

The lock range of the burst lock PLL can be set using BTLCR.LOCKRANGE[1:0]. If the burst lock PLL is locked, CROMASR1.FSCLOCK becomes 1; and if unlocked, CROMASR1.FSCLOCK becomes 0.

The loop gain of the burst lock PLL can be set using BTLCR.LOOPGAIN[1:0] and BTLCR.LOCKLIMIT[1:0]. As the response speed is increased and the frequency search is started earlier, the lockup time becomes shorter. However, the PLL becomes unstable and unlocked more easily due to noise.

The S/N of the color burst signal can be checked using CROMASR2.LOCKLEVEL[7:0].

chanhvinh.com

(4) Color System Detection Block

The color system detection block detects the color system of the input video signal based on the oscillation frequency of the burst lock PLL and phase information of the color burst signal. The color system can be detected using BTLCR.NONTSC358, BTLCR.NONTSC443, BTLCR.NOPALM, BTLCR.NOPALN, BTLCR.NOPAL443, and BTLCR.NOSECAM. Color system detection can be set to fully automatic, manual, or semi-automatic (detecting the specified color system only). If the detection result does not apply to any color system type, the color system selected with BTLCR.DEFAULTSYS[1:0] is assumed.

When an NTSC, PAL, or SECAM signal is detected, 1 is read from CROMASR2.ISNTSC, CROMASR2.ISPAL, or CROMASR2.ISSEAM, respectively. The currently used color system can be checked by reading CROMASR1.COLORSYS[1:0].

The color sub-carrier frequency can be checked by reading CROMASR1.FSCMODE.

30.5.5 Y/C Separator Circuit

The Y/C separator circuit separates the composite video signal of the NTSC, PAL, or SECAM format into the Y and C signals. Two-dimensional adaptive separation is used for NTSC and PAL and one-dimensional separation for SECAM. Figure 30.31 shows a block diagram of the Y/C separator circuit.

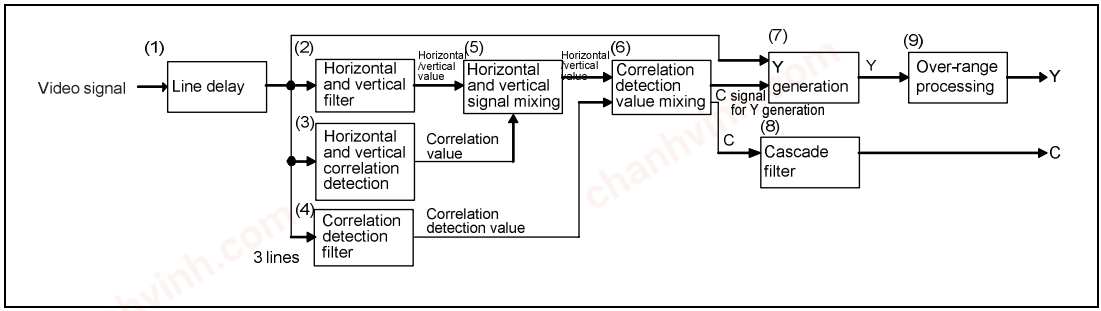

Figure 30.31 Block Diagram of Y/C Separator Circuit

chanhvinh.com

Table 30.36 shows the operation of the Y/C separator circuit for each color format.

Table 30.36 Y/C Separation Operation for Each Color Format

Color Format	YC Separation Operation
NTSC-3.58	Two dimensional
NTSC-4.43	Two dimensional
PAL-M	Two dimensional
PAL-N	Two dimensional
PAL-4.43	Two dimensional
SECAM	One dimensional

(1) Line Delay Block

In two-dimensional Y/C separation, three lines of data is required (directly adjacent three lines for NTSC and adjacent three lines on every second line for PAL). This block delays video signals to hold three lines of data.

(2) Horizontal and Vertical Filter Block

In two-dimensional adaptive Y/C separation, the horizontal band pass filter (BPF), vertical band pass filter (BPF), and horizontal/vertical band pass filter (BPF) are adaptively switched according to the correlation between the horizontally-/vertically-adjacent pixels. This block processes the input signals using the horizontal BPF, vertical BPF, or horizontal/vertical BPF. In one-dimensional Y/C separation, only the horizontal BPF is used. Figure 30.32 shows the filter configuration.

chanhvinh.com

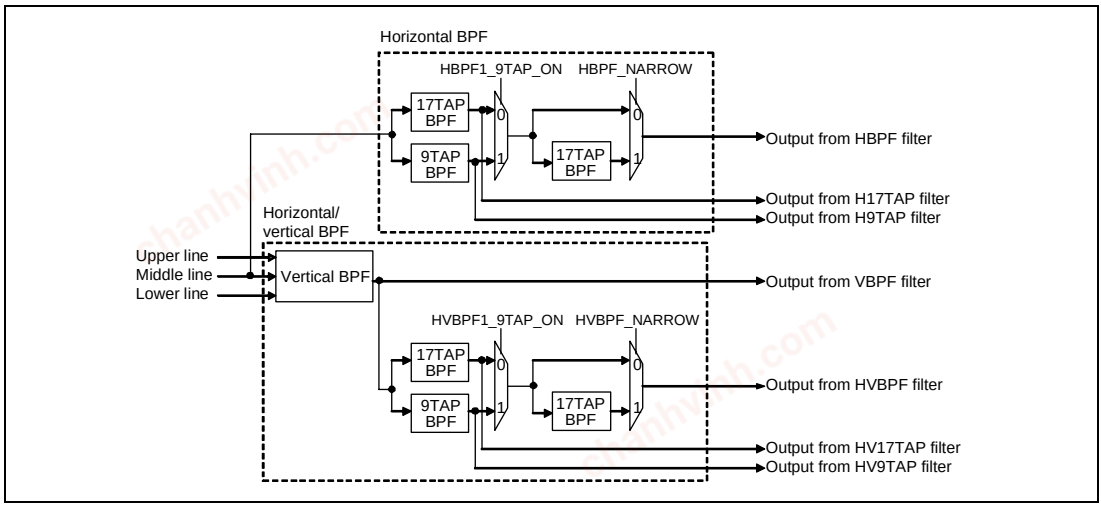

Figure 30.32 Horizontal and Vertical Filter Configuration

The horizontal BPF is composed of two stages. Either the 9-TAP or 17-TAP BPF is selected at the former stage. When YCSCR8.HBPF1_9TAP_ON/HVBPF1_9TAP_ON is 0, the 17-TAP BPF is selected; and when 1, the 9-TAP BPF is selected. Either bypass operation or the 9-TAP BPF is selected at the latter stage. When YCSCR8.HBPF_NARROW/HVBPF_ NARROW is 0, bypass operation is selected; and when 1, the 17-TAP BPF is selected.

(3) Horizontal and Vertical Correlation Detection Block

The horizontal and vertical correlation detection block detects the correlation value between the horizontal pixels, vertical pixels, and horizontal/vertical pixels. The value obtained by mixing the detected correlation value and the two-dimensional Y/C separation filter select coefficient is used for selecting the appropriate horizontal, vertical, or horizontal/vertical filter.

Table 30.37 shows the two-dimensional Y/C separation filter select coefficients.

chanhvinh.com

Table 30.37 Two-Dimensional Y/C Separation Filter Select Coefficients

Category	Bit Name	Description	Bit Correlation
Vertical Y/C separation select coefficients	YCSCR5. K21A[5:0]	As the value becomes larger, the vertical BPF is applied to the narrower range.	There is correlation between these bits. When horizontal dot crawl is conspicuous, make the bit field value smaller (make the K24 value larger). However, when the value is too small (K24 is too large), vertical dot crawl is produced.
	YCSCR5. K22A[7:0]	As the value becomes larger, the vertical BPF is applied to the narrower range.	
	YCSCR7. K23A[3:0]	As the value becomes larger, the vertical BPF is applied to the narrower range.	
	YCSCR7. K24[4:0]	As the value becomes larger, the vertical BPF is applied to the wider range.	
	YCSCR6. K21B[5:0]	As the value becomes larger, the vertical BPF is applied to the narrower range.	There is correlation between these bits. When horizontal dot crawl is conspicuous, make the bit field value smaller. However, when the value is too small, vertical dot crawl is produced.
	YCSCR6. K22B[7:0]	As the value becomes larger, the vertical BPF is applied to the narrower range.	
	YCSCR7. K23B[3:0]	As the value becomes larger, the vertical BPF is applied to the narrower range.	
Horizontal Y/C separation select coefficients	YCSCR3. K11[5:0]	As the value becomes larger, the horizontal BPF is applied to the narrower range.	There is correlation between these bits. When vertical dot crawl is conspicuous, make the bit field value smaller. However, when the value is too small, horizontal dot crawl is produced.
	YCSCR3. K13[5:0]	As the value becomes larger, the horizontal BPF is applied to the narrower range.	
	YCSCR3. K15[5:0]	As the value becomes larger, the horizontal BPF is applied to the narrower range.	
	YCSCR4. K12[5:0]	As the value becomes larger, the horizontal BPF is applied to the narrower range.	There is correlation between these bits. When vertical dot crawl is conspicuous, make the bit field value smaller. However, when the value is too small, horizontal dot crawl is produced.
	YCSCR4. K14[5:0]	As the value becomes larger, the horizontal BPF is applied to the narrower range.	
	YCSCR4. K16[5:0]	As the value becomes larger, the horizontal BPF is applied to the narrower range.	

chanhvinh.com

(4) Correlation Detection Filter Block

The correlation detection filter block, specific to this module, attaches greater importance to the correlation between lines to reduce dot crawl, especially at the intersection of a cross. By mixing the signals after correlation detection filter block, dot crawl can be reduced when dot crawl is not fully removed by the horizontal and vertical filter block.

(5) Horizontal and Vertical Signal Mixing Block

The horizontal and vertical signal mixing block mixes the signals output from the horizontal, vertical, and horizontal/vertical filter blocks with the signals output from the horizontal and horizontal/vertical filters of the former stage. After that, the appropriate signal is selected from among the signals output from the horizontal, vertical, and horizontal/vertical filters according to the correlation value obtained using (3). Figure 30.33 shows the configuration of the horizontal and vertical signal mixing block.

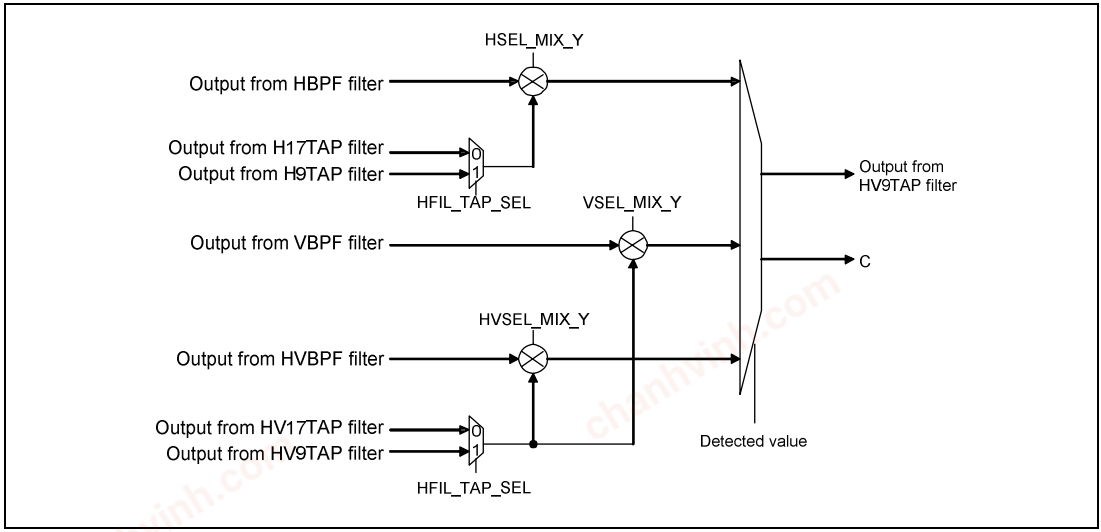

Figure 30.33 Configuration of Horizontal and Vertical Signal Mixing Block

The signal to be mixed, which is output from either the horizontal or horizontal/vertical filter of the former stage, can be selected with YCSCR8.HFIL_TAP_SEL. When YCSCR8. HFIL_TAP_SEL is 0, the signal output from the 17-TAP filter is selected; and when 1, the signal output from the 9-TAP filter is selected.

chanhvinh.com

This block mixes the signals output from the horizontal filter with the signals output from the above described horizontal filter of the former stage. The mixing ratio can be set with YCSCR9.HSEL_MIX_Y[3:0]. Similarly, this block mixes the signals output from the vertical or horizontal/vertical filter with the signals output from the above described horizontal/vertical filter of the former stage. The mixing ratio can be set with YCSCR9.VSEL_MIX_Y[3:0] and YCSCR9.HVSEL_MIX_Y[3:0].

This block selects the appropriate signal from among the signals output from the horizontal, vertical, and horizontal/vertical filters according to the correlation value obtained using (3).

(6) Correlation Detection Value Mixing Block

The correlation detection value mixing block mixes the C signal for Y generation, and the C signal generated using (5) with the signals after correlation detection filter block (4).

Figure 30.34 shows the configuration of the correlation detection value mixing block.

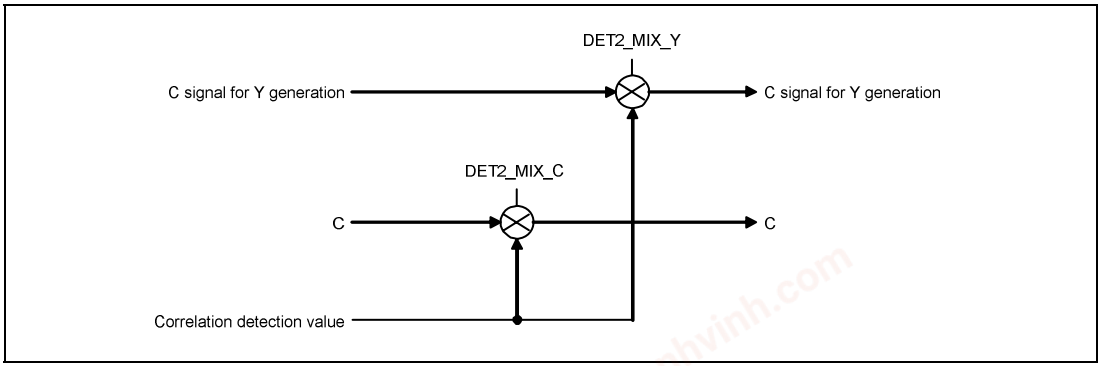

Figure 30.34 Configuration of Correlation Detection Value Mixing Block

When YCSCR9.DET2_ON is 1, this block mixes the signal after the correlation detection filter block. The mixing ratio of the C signal for Y generation to the signal after the correlation detection filter block can be set with YCSCR12.DET2_MIX_Y[3:0]. Similarly, the mixing ratio of the C signal to the signal after the correlation detection filter block can be set with YCSCR12.DET2_MIX_C[3:0].

When YCSCR9.DET2_ON is 0, this block outputs the signal after the horizontal and vertical filter block without mixing.

chanhvinh.com

(7) Y Generation Block

The Y generation block generates the Y signal by subtracting the C signal for Y generation from the video signal.

(8) Cascade Filter Block

The cascade filter block allows the C signal to pass through the cascade filter or TAKE-OFF filter to further narrow the bandwidth.

Figure 30.35 shows the configuration of the cascade filter block.

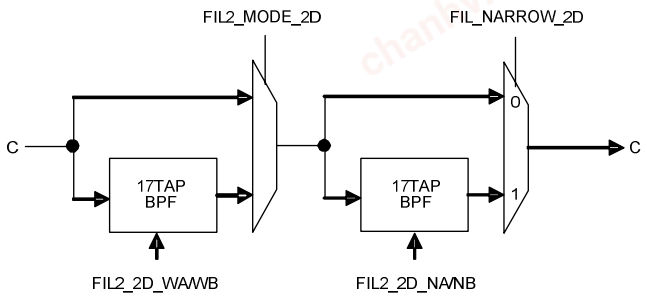

Figure 30.35 Configuration of Cascade Filter Block

The cascade filter block is composed of two stages. Either bypass operation or 17-TAP filter is selected at the former stage. Bypass operation, cascade, or TAKE-OFF filter can be selected at the former stage with YCSCR12.FIL2_MODE_2D[1:0].

Similarly, either bypass operation or 17-TAP filter can be selected at the latter stage with YCSCR12.FIL2_NARROW_2D.

Both of the former- and latter-stage filters are universal and can be set with YCTWA_F0 to YCTWA_F8, YCTWB_F0 to YCTWB_F8, YCTNA_F0 to YCTNA_F8, and YCTNB_F0 to YCTNB_F8.

Tables 30.38 to 30.40 show the recommended setting for each filter.

chanhvinh.com

Table 30.38 Recommended Settings for Two-Dimensional Y/C Filters (NTSC)

	NTSC						NTSC				
		Cascade Filter		TAKE-OFF Filter				Cascade Filter		TAKE-OFF Filter	
Bit Name	Bypass Operation	1 Stage	2 Stages	Broad-band	Narrow-band	Bit Name	Bypass Operation	1 Stage	2 Stages	Broad-band	Narrow-band
FIL2_MODE_2D	0	1		2		FIL2_MODE_2D	0	1		2	
FIL2_NARROW_2D	—	0	1	—	—	FIL2_NARROW_2D	—	0	1	—	—
FIL2_2D_WA_F0	—	24	24	0	0	FIL2_2D_NA_F0	—	—	24	—	—
FIL2_2D_WA_F1	—	44	44	0	-48	FIL2_2D_NA_F1	—	—	44	—	—
FIL2_2D_WA_F2	—	20	20	0	-20	FIL2_2D_NA_F2	—	—	20	—	—
FIL2_2D_WA_F3	—	-52	-52	-28	160	FIL2_2D_NA_F3	—	—	-52	—	—
FIL2_2D_WA_F4	—	-128	-128	96	232	FIL2_2D_NA_F4	—	—	-128	—	—
FIL2_2D_WA_F5	—	-128	-128	228	-116	FIL2_2D_NA_F5	—	—	-128	—	—
FIL2_2D_WA_F6	—	-12	-12	-916	-900	FIL2_2D_NA_F6	—	—	-12	—	—
FIL2_2D_WA_F7	—	132	132	-204	-4	FIL2_2D_NA_F7	—	—	132	—	—
FIL2_2D_WA_F8	—	200	200	1648	1392	FIL2_2D_NA_F8	—	—	200	—	—
FIL2_2D_WB_F0	—	—	—	—	—	FIL2_2D_NB_F0	—	—	—	—	—
FIL2_2D_WB_F1	—	—	—	—	—	FIL2_2D_NB_F1	—	—	—	—	—
FIL2_2D_WB_F2	—	—	—	—	—	FIL2_2D_NB_F2	—	—	—	—	—
FIL2_2D_WB_F3	—	—	—	—	—	FIL2_2D_NB_F3	—	—	—	—	—
FIL2_2D_WB_F4	—	—	—	—	—	FIL2_2D_NB_F4	—	—	—	—	—
FIL2_2D_WB_F5	—	—	—	—	—	FIL2_2D_NB_F5	—	—	—	—	—
FIL2_2D_WB_F6	—	—	—	—	—	FIL2_2D_NB_F6	—	—	—	—	—
FIL2_2D_WB_F7	—	—	—	—	—	FIL2_2D_NB_F7	—	—	—	—	—
FIL2_2D_WB_F8	—	—	—	—	—	FIL2_2D_NB_F8	—	—	—	—	—

chanhvinh.com

Table 30.39 Recommended Settings for Two-Dimensional Y/C Filters (PAL)

	PAL						PAL				
		Cascade Filter		TAKE-OFF Filter				Cascade Filter		TAKE-OFF Filter	
Bit Name	Bypass Operation	1 Stage	2 Stages	Broad-band	Narrow-band	Bit Name	Bypass Operation	1 Stage	2 Stages	Broad-band	Narrow-band
FIL2_MODE_2D	0	1		2		FIL2_MODE_2D	0	1		2	
FIL2_NARROW_2D	—	0	1	—	—	FIL2_NARROW_2D	—	0	1	—	—
FIL2_2D_WA_F0	—	-20	-20	0	0	FIL2_2D_NA_F0	—	—	-20	—	—
FIL2_2D_WA_F1	—	24	24	0	0	FIL2_2D_NA_F1	—	—	24	—	—
FIL2_2D_WA_F2	—	64	64	0	-23	FIL2_2D_NA_F2	—	—	64	—	—
FIL2_2D_WA_F3	—	40	40	16	-46	FIL2_2D_NA_F3	—	—	40	—	—
FIL2_2D_WA_F4	—	-76	-76	59	145	FIL2_2D_NA_F4	—	—	-76	—	—
FIL2_2D_WA_F5	—	-164	-164	85	409	FIL2_2D_NA_F5	—	—	-164	—	—
FIL2_2D_WA_F6	—	-84	-84	-498	-918	FIL2_2D_NA_F6	—	—	-84	—	—
FIL2_2D_WA_F7	—	108	108	-101	-363	FIL2_2D_NA_F7	—	—	108	—	—
FIL2_2D_WA_F8	—	216	216	878	1592	FIL2_2D_NA_F8	—	—	216	—	—
FIL2_2D_WB_F0	—	—	—	—	—	FIL2_2D_NB_F0	—	—	—	—	—
FIL2_2D_WB_F1	—	—	—	—	—	FIL2_2D_NB_F1	—	—	—	—	—
FIL2_2D_WB_F2	—	—	—	—	—	FIL2_2D_NB_F2	—	—	—	—	—
FIL2_2D_WB_F3	—	—	—	—	—	FIL2_2D_NB_F3	—	—	—	—	—
FIL2_2D_WB_F4	—	—	—	—	—	FIL2_2D_NB_F4	—	—	—	—	—
FIL2_2D_WB_F5	—	—	—	—	—	FIL2_2D_NB_F5	—	—	—	—	—
FIL2_2D_WB_F6	—	—	—	—	—	FIL2_2D_NB_F6	—	—	—	—	—
FIL2_2D_WB_F7	—	—	—	—	—	FIL2_2D_NB_F7	—	—	—	—	—
FIL2_2D_WB_F8	—	—	—	—	—	FIL2_2D_NB_F8	—	—	—	—	—

chanhvinh.com

Table 30.40 Recommended Settings for Two-Dimensional Y/C Filters (SECAM)

	SECAM					SECAM			
		Cascade Filter		TAKE-OFF Filter			Cascade Filter		TAKE-OFF Filter
Bit Name	Bypass Operation	1 Stage	2 Stages		Bit Name	Bypass Operation	1 Stage	2 Stages	
FIL2_MODE_2D	0	1		2	FIL2_MODE_2D	0	1		2
FIL2_NARROW_2D	—	0	1	—	FIL2_NARROW_2D	—	0	1	—
FIL2_2D_WA_F0	—	-20	-20	0	FIL2_2D_NA_F0	—	—	-1008	—
FIL2_2D_WA_F1	—	24	24	-12	FIL2_2D_NA_F1	—	—	1976	—
FIL2_2D_WA_F2	—	64	64	-18	FIL2_2D_NA_F2	—	—	-2024	—
FIL2_2D_WA_F3	—	40	40	38	FIL2_2D_NA_F3	—	—	444	—
FIL2_2D_WA_F4	—	-76	-76	100	FIL2_2D_NA_F4	—	—	1868	—
FIL2_2D_WA_F5	—	-164	-164	88	FIL2_2D_NA_F5	—	—	-2864	—
FIL2_2D_WA_F6	—	-84	-84	-508	FIL2_2D_NA_F6	—	—	1352	—
FIL2_2D_WA_F7	—	108	108	-114	FIL2_2D_NA_F7	—	—	1376	—
FIL2_2D_WA_F8	—	216	216	852	FIL2_2D_NA_F8	—	—	-2240	—
FIL2_2D_WB_F0	—	-12	-12	—	FIL2_2D_NB_F0	—	—	-1080	—
FIL2_2D_WB_F1	—	40	40	—	FIL2_2D_NB_F1	—	—	2800	—
FIL2_2D_WB_F2	—	60	60	—	FIL2_2D_NB_F2	—	—	-3308	—
FIL2_2D_WB_F3	—	12	12	—	FIL2_2D_NB_F3	—	—	1628	—
FIL2_2D_WB_F4	—	-104	-104	—	FIL2_2D_NB_F4	—	—	1444	—
FIL2_2D_WB_F5	—	-156	-156	—	FIL2_2D_NB_F5	—	—	-3308	—
FIL2_2D_WB_F6	—	-64	-64	—	FIL2_2D_NB_F6	—	—	2140	—
FIL2_2D_WB_F7	—	120	120	—	FIL2_2D_NB_F7	—	—	376	—
FIL2_2D_WB_F8	—	208	208	—	FIL2_2D_NB_F8	—	—	-1384	—

(9) Over-Range Control Block

If overflow or underflow occurs at the top or bottom of the color amplitude of video signals, Y/C separation may not be correctly performed thus causing vertical lines to appear as dot crawl. To reduce this phenomenon, the over-range control block automatically inserts the low-pass filter for Y signals (cuts off the frequency components of the vertical lines)

chanhvinh.com

Setting RGORCR7.UCMP_SW to 1 enables over-range control, and setting RGORCR7.DCMP_SW to 1 enables under-range control. One of four over-range levels can be set with RGORCR1.RADJ_O_LEVEL0[9:0], RGORCR3.RADJ_O_LEVEL1[9:0], and RGORCR5.RADJ_O_LEVEL2[9:0]. Similarly, one of four under-range levels can be set with RGORCR2.RADJ_U_LEVEL0[9:0], RGORCR4.RADJ_U_LEVEL1[9:0], and RGORCR6.RADJ_U_LEVEL2[9:0]. The filter to be inserted is appropriately selected according to the over-range and under-range levels.

Setting HWIDE_SW to 1 enables detection of the maximum (minimum) level of five pixels in the horizontal direction in addition to the currently processed pixel to detect over-range or under-range occurrence.

30.5.6 Chroma Decoding Circuit

The chroma decoding circuit demodulates the C signal extracted by the Y/C separator circuit into the Cb/Cr signal. This circuit has the automatic color control function (ACC), in which the amplitude of the color burst signal is detected to adjust the color gain automatically and also has the TINT/R-Y axis correction function, in which hue is adjusted at demodulation.

Figure 30.36 shows the block diagram of the chroma decoding circuit.

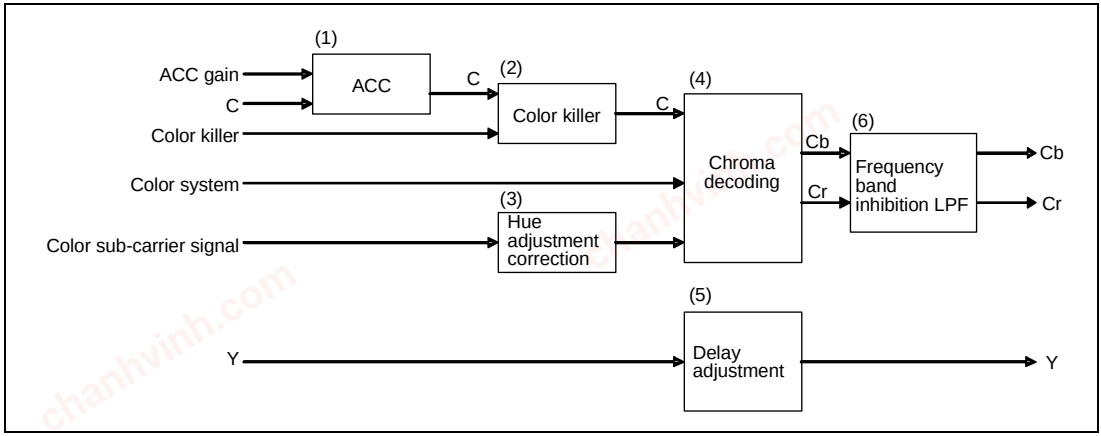

Figure 30.36 Block Diagram of Chroma Decoding Circuit

chanhvinh.com

(1) Automatic Color Control (ACC) Block

The ACC block detects the amplitude of the color burst signal and automatically controls the C signal gain so that the amplitude should be controlled to the target value. The ACC function is activated with ACCCR1.ACCMODE = 0. The target amplitude of the color burst signal can be set with ACCCR1.ACCLEVEL[8:0]. The gain is fixed when the amplitude falls within ACCCR1.ACCLEVEL[8:0] ± ACCCR3.ACCPRECIS[5:0]. The maximum ACC gain can be set with ACCCR1.ACCMAXGAIN[1:0]. The currently set gain value can be checked by reading CROMASR1.ACCMAINGAIN[8:0] (main) and CROMASR1.ACCSUBGAIN[1:0] (sub).

The C signal gain can also be set manually by setting ACCCR1.ACCMODE to 1. The specific gain value can be set with ACCCR2.CHROMAMAINGAIN[8:0] (main) and ACCCR2.CHROMASUBGAIN[1:0] (sub).

(2) Color Killer

The color killer deletes color information when the color bust signal amplitude is small in a weak electric field. The color killer is turned on or off based on the hysteresis; specifically, it is turned on when the amplitude reaches the value set with ACCCR3.KILLERLEVEL[5:0] and turned off when the amplitude reaches the value determined by ACCCR3.KILLERLEVEL[5:0] + ACCCR1.KILLEROFFSET[3:0].

The color killer can also be turned off forcibly by so setting ACCCR3.KILLERMODE.

(3) Hue Adjustment Correction Block

The hue adjustment correction block adjusts the color sub-carrier signal phase to adjust the Cb/Cr hue after chroma decoding. This function can be used only for the NTSC and PAL systems. The phase of the demodulation axis is controlled with TINTCR.TINTMAIN[9:0] and the phase of the R-Y axis is controlled with TINTCR.TINTSUB[5:0].

(4) Chroma Decoding Block

The chroma decoding block demodulates the Cb/Cr signal from the C signal. Line averaging can be carried out before demodulation according to YCDCR.DEMODMODE[1:0] setting. YCDCR.DEMODMODE[1:0] should usually be set to 2 (two-line demodulation for PAL only; one-line demodulation for NTSC).

chanhvinh.com

(5) Delay Adjustment Block

The delay adjustment block delays the Y signal to adjust the Y/C signal delay. The Y signal can be delayed by -16 to 15 clock pulses with YCDCR.LUMADELAY[4:0].

(6) Frequency Band Inhibition LPF

The frequency band inhibition LPF inhibits the frequency band of the Cb/Cr signal after chroma decoding. This LPF is turned on or off according to YCDCR.CHROMALPF setting.

30.5.7 Digital Clamp Circuit

The digital clamp circuit provides pedestal clamp for the Y signals and center clamp for the Cb/Cr signals at any position. This circuit also detects the amount of noise using the autocorrelation function.

Figure 30.37 shows the block diagram of the digital clamp circuit.

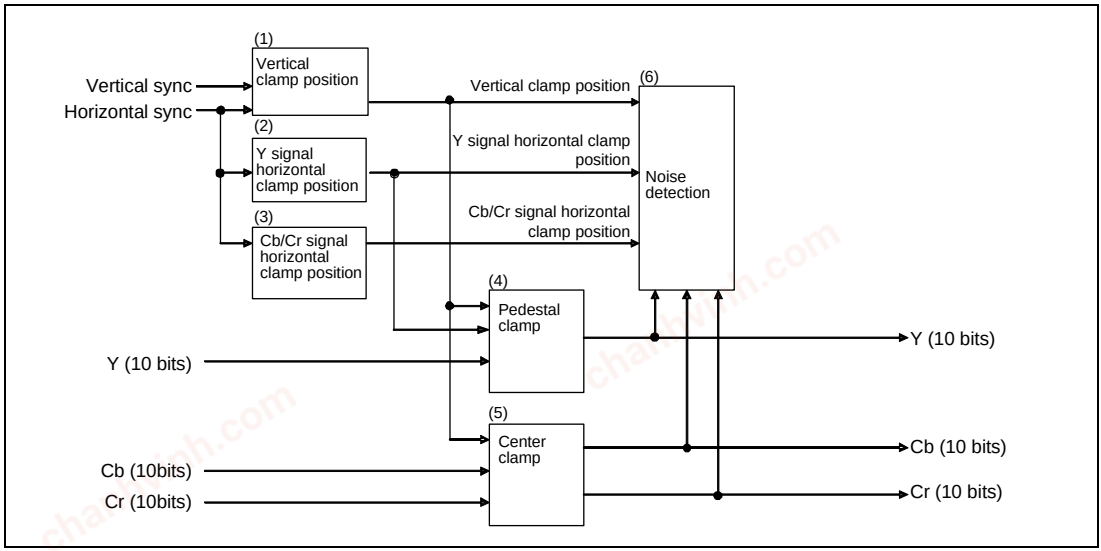

Figure 30.37 Block Diagram of Digital Clamp Circuit

(1) Vertical Clamp Position Control Block

The vertical clamp position can be set with DCPCR4.DCPSTART[5:0] and DCPCR5.DCPEND[5:0]. The setting is used in common to Y, Cb, and Cr signals.

chanhvinh.com

(2) Y Signal Horizontal Clamp Position Control Block

The horizontal clamp start position of the Y signal can be set with DCPCR7.DCPPOS_Y[7:0]. The horizontal clamp width can be set with DCPCR6.DCPWIDTH[6:0].

The horizontal clamp width setting is used in common to Y, Cb, and Cr signals.

(3) Cb/Cr Signal Horizontal Clamp Position Control Block

The horizontal clamp start position of the Cb/Cr signal can be set with DCPCR8.DCPPOS_C[7:0]. The horizontal clamp width can be set with DCPCR6.DCPWIDTH[6:0].

The horizontal clamp width setting is used in common to Y, Cb, and Cr signals.

(4) Pedestal Clamp Control Block

The pedestal clamp control block stabilizes the Y signal pedestal level.

When DCPCR1.DCPMODE_Y is 0, the value set with DCPCR1.BLANKLEVEL_Y[9:0] is subtracted from the Y signal, which is expressed as:

Y signal output = Y signal input – DCPCR1.BLANKLEVEL_Y[9:0]

When DCPCR1.DCPMODE_Y is 1, the Y signal level detected at the set clamp position and DCPCR1.BLANKLEVEL_Y[9:0] are added together and the resulting value is subtracted from the Y signal, which is expressed as:

Y signal output = Y signal input – (detected value + DCPCR1.BLANKLEVEL_Y[9:0])

The detected value can be used from DSPCR1.CLAMPLEVEL_Y[9:0].

The clamp response speed can be set with DCPCR3.DCPRESPONSE[2:0]. The setting is used in common to Y, Cb, and Cr signals.

(5) Center Clamp Control Block

The center clamp control block stabilizes the Cb/Cr signal center level.

When DCPCR2.DCPMODE_C is 0, the value set with DCPCR2.BLANKLEVEL_CB/DCPCR2.BLANKLEVEL_CR[5:0] is subtracted from the Cb/Cr signal, which is expressed as:

Cb signal output = Cb signal input – DCPCR2.BLANKLEVEL_CB[5:0]

Cr signal output = Cr signal input – DCPCR2.BLANKLEVEL_CR[5:0]

chanhvinh.com

When DCPCR2.DCPMODE_C is 1, the Cb/Cr signal level detected at the set clamp position and DCPCR2.BLANKLEVEL_CB/DCPCR2.BLANKLEVEL_CR[5:0] are added together and the resulting value is subtracted from the Cb/Cr signal, which is expressed as:

Cb signal output = Cb signal input – (detected value + DCPCR2.BLANKLEVEL_CB[5:0])

Cr signal output = Cr signal input – (detected value + DCPCR2.BLANKLEVEL_CR[5:0])

The detected value can be used from DSPCR1.CLAMPLEVEL_CB[5:0] and DSPCR2.CLAMPLEVEL_CR[5:0].

The clamp response speed can be set with DCPCR3.DCPRESPONSE[2:0]). The setting is used in common to Y, Cb, and Cr signals.

(6) Noise Detection Block

Using the autocorrelation function, the noise amount at the set clamp position can be detected. With NSDCR.ACFINPUT[1:0], either Y, Cb, or Cr signal can be selected for which to calculate the autocorrelation function. The delay time for autocorrelation function calculation can be set with NSDCR.ACFLAGTIME[4:0] and accumulated field amount of autocorrelation function can be set with NSDCR.ACFFILTER[1:0]. The autocorrelation function (correlation coefficient) can be read from NSDSR.ACFSTRENGTH[15:0].

30.5.8 Output Control Circuit

The output control circuit sets the signal capturing position and adjusts the contrast and color.

Figure 30.38 shows the block diagram of the output control circuit

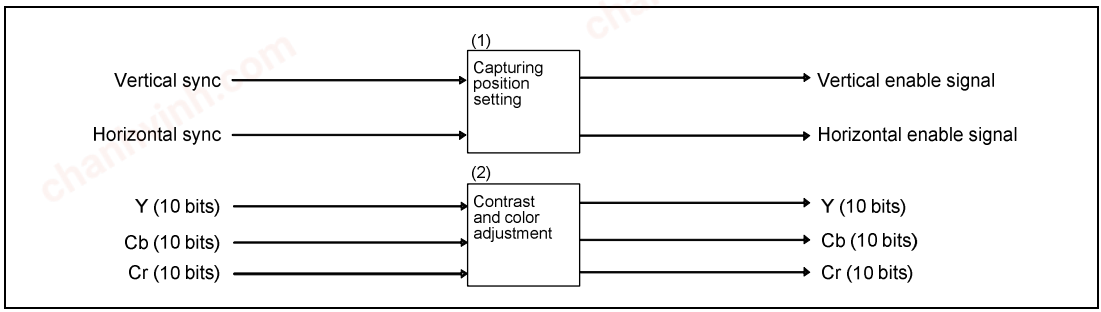

Figure 30.38 Block Diagram of Output Control Circuit

chanhvinh.com

(1) Capturing Position Setting Block

The capturing position setting block sets the position to capture the input video signals. The position can be set with TGCR1.SRCLEFT[8:0], TGCR2.SRCTOP[5:0], TGCR2.SRCHEIGHT[9:0], and TGCR3.SRCWIDTH[10:0]. These settings are applied only to this module. To set the display size of the input video signals, the vertical capture size register (SCL0_DS2) and horizontal capture size register (SCL0_DS3) of the scaler of video display controller 4 should be used.

(2) Contrast and Color Adjustment Block

The contrast and color adjustment block adjusts the gain of the output Y/Cb/Cr signals. The contrast (Y signal gain) can be adjusted with YGAINCR.Y_GAIN2[9:0] and the color (Cb/Cr signal gain) can be adjusted with CBGAINCR.CB_GAIN2[9:0] and CRGAINCR.CR_GAIN2[9:0].

chanhvinh.com

30.6 Recommended Setting

Tables 30.41 and 30.42 show the recommended setting for this module.

Table 30.41 Recommended Setting Common to Various Color Formats

Register	Bit	Initial Value (Decimal)	Recommended Value (Decimal)	Remarks
ADCCR1	AGCMODE	0	1	AGC on
SYNSCR1	LPFVSYNC	3	3	
	LPFHSYNC	3	5	
	VELOCITYSHIFT_H	0	2	
	SLICERMODE_H	2	2	Automatic slicing
	SLICERMODE_V	2	2	Automatic slicing
SYNSCR2	SYNCMAXDUTY_H	15	15	
	SYNCMINDUTY_H	10	10	
SYNSCR3	SSCLIPSEL	15	15	
	CSYNCSLICE_H	146	146	
SYNSCR4	SYNCMAXDUTY_V	15	15	
	SYNCMINDUTY_V	10	9	
SYNSCR5	VSYNCDELAY	0	0	
	VSYNCSLICE	11	10	
	CSYNCSLICE_V	146	146	
HAFCCR1	HAFCGAIN	6	12	
	HAFCFREERUN	0	0	
HAFCCR2	HAFCSTART	0	0	
	NOX2HOSC	0	1	
	DOX2HOSC	0	0	
HAFCCR3	HAFCEND	8	8	
	HAFCMODE	2	2	Comparison disabled during VBI period
VCDWCR1	VCDFREERUN	0	0	

chanhvinh.com

Register	Bit	Initial Value (Decimal)	Recommended Value (Decimal)	Remarks
DCPCR1	DCPMODE_Y	1	1	Automatic clamp setting
	DCPCHECK	0	0	
	BLANKLEVEL_Y	0	-40 (984)	
DCPCR2	DCPMODE_C	0	0	
	BLANKLEVEL_CB	0	0	
	BLANKLEVEL_CR	0	0	
DCPCR3	DCPRESPONSE	5	0	
DCPCR4	DCPSTART	16	16	
DCPCR5	DCPEND	16	16	
DCPCR6	DCPWIDTH	54	27	
DCPCR7	DCPPOS_Y	162	162	
DCPCR8	DCPPOS_C	27	54	
NSDCR	ACFINPUT	0	0	
	ACFLAGTIME	0	0	
	ACFFILTER	0	3	
BTLCR	LOCKRANGE	1	1	
	LOOPGAIN	1	3	
	LOCKLIMIT	2	1	
	BCOFREERUN	0	0	
BTGPCR	BGPCHECK	0	0	
	BGPWIDTH	36	54	
	BGPSTART	130	110	
ACCCR1	KILLEROFFSET	8	5	
	ACCMODE	0	0	ACC on
	ACCMAXGAIN	0	0	
ACCCR2	CHROMASUBGAIN	0	0	
	CHROMAMAINGAIN	256	210	

chanhvinh.com

Register	Bit	Initial Value (Decimal)	Recommended Value (Decimal)	Remarks
ACCCR3	ACCRESPONSE	1	1	
	ACCPRECIS	20	8	
	KILLERMODE	0	0	
	KILLERLEVEL	9	4	
TINTCR	TINTSUB	0	0	
	TINTMAIN	0	0	
YCDCR	LUMADELAY	0	0	
	CHROMALPF	0	0	
	DEMODMODE	2	2	
AGCCR1	DOREDUCE	0	0	
	NOREDUCE	0	0	
	AGCRESPONSE	5	4	
AGCCR2	AGCPRECIS	10	10	
PKLIMITCR	PEAKLEVEL	0	2	Peak limiter on
	PEAKATTACK	2	2	
	PEAKRELEASE	0	3	
	PEAKRATIO	0	0	
	MAXPEAKSAMPLES	0	20	
RGORCR1	RADJ_O_LEVEL0	1023	992	
RGORCR2	RADJ_U_LEVEL0	0	64	
RGORCR3	RADJ_O_LEVEL1	1023	960	
RGORCR4	RADJ_U_LEVEL1	0	48	
RGORCR5	RADJ_O_LEVEL2	1023	928	
RGORCR6	RADJ_U_LEVEL2	0	32	
RGORCR7	TEST_MONI	0	0	
	RADJ_MIX_K_FIX	0	0	
	UCMP_SW	0	1	Over-range detection enabled
	DCMP_SW	0	1	Under-range detection enabled
	HWIDE_SW	1	1	

chanhvinh.com

Register	Bit	Initial Value (Decimal)	Recommended Value (Decimal)	Remarks
AFCPFCR	PHDET_FIX	0	0	
	PHDET_DIV	5	5	
RUPDCR	NEWSETTING	0	1	
YCSCR8	HBPF_NARROW	1	0	
	HVBPF_NARROW	1	0	
	HBPF1_9TAP_ON	0	0	
	HVBPF1_9TAP_ON	0	0	
	HFIL_TAP_SEL	0	0	
YCSCR11	V_Y_LEVEL	3	0	
DCPCR9	CLP_HOLD_ON_Y	1	0	
	CLP_HOLD_ON_CB	1	0	
	CLP_HOLD_ON_CR	1	0	
YCTWA_F0 to YCTWA_F8	FIL2_2D_WA_F0 to FIL2_2D_WA_F8	Refer to 30.5.5 (8), Cascade Filter Block.		
YCTWB_F0 to YCTWA_F8	FIL2_2D_WB_F0 to FIL2_2D_WB_F8	Refer to 30.5.5 (8), Cascade Filter Block.		
YCTNA_F0 to YCTNA_F8	FIL2_2D_NA_F0 to FIL2_2D_NA_F8	Refer to 30.5.5 (8), Cascade Filter Block.		
YCTNB_F0 to YCTNB_F8	FIL2_2D_NB_F0 to FIL2_2D_NB_F8	Refer to 30.5.5 (8), Cascade Filter Block.		
YGAINCR	Y_GAIN2	512	816	
CBGAINCR	CB_GAIN2	512	663	
CRGAINCR	CR_GAIN2	512	663	
PGA_UPDATE	PGA_VEN	1	1	
PGACR	PGA_GAIN_SEL	0	0	
	PGA_GAIN	0	0	
ADCCR2	ADC_VINSEL	0	0	

chanhvinh.com

Table 30.42 Recommended Setting for Each Color Format

Register	Bit	NTSC-3.58	NTSC-4.43	PAL-4.43	PAL-M	PAL-N	SECAM
Capturing position setting							
TGCR1	SRCLEFT	256	256	256	256	256	256
TGCR2	SRCTOP	16	19	19	16	19	19
	SRCHEIGHT	241	288	288	241	288	288
TGCR3	SRCWIDTH	1428	1412	1412	1428	1412	1412
Horizontal AFC setting							
HAFCCR1	HAFCTYP	692	704	704	692	704	704
HAFCCR2	HAFCMAX	792	785	785	792	785	785
HAFCCR3	HAFCMIN	592	630	630	592	630	630
Vertical countdown setting							
VCDWCR1	NOVCD50	1	0	0	1	0	0
	NOVCD60	0	1	1	0	1	1
	VCDDEFAULT	2	1	1	2	1	1
	VCDWINDOW	30	30	30	30	30	30
	VCDOFFSET	15	15	15	15	15	15
BCO setting							
BTLCR	DEFAULTSYS	0	0	1	1	1	2
	NONTSC358	0	1	1	1	1	1
	NONTSC443	1	0	1	1	1	1
	NOPALM	1	1	1	0	1	1
	NOPALN	1	1	1	1	0	1
	NOPAL443	1	1	0	1	1	1
	NOSECAM	1	1	1	1	1	0
ACC level setting							
ACCCR1	ACCLEVEL	220	220	230	230	230	220
AGC level setting							
AGCCR1	AGCLEVEL	230	230	242	242	242	242

chanhvinh.com

Register	Bit	NTSC-3.58	NTSC-4.43	PAL-4.43	PAL-M	PAL-N	SECAM
Y/C separation setting							
YCSCR3	K15	2	2	2	2	2	2
	K13	8	8	8	8	8	8
	K11	4	4	3	3	3	4
YCSCR4	K16	3	3	4	4	4	3
	K14	16	16	63	63	63	16
	K12	8	8	2	2	2	1
YCSCR5	K22A	32	32	32	32	32	32
	K21A	6	6	10	10	10	10
YCSCR6	K22B	8	8	15	15	15	15
	K21B	6	6	10	10	10	6
YCSCR7	K23B	6	6	3	3	3	3
	K23A	3	3	3	3	3	3
	K24	5	5	8	8	8	8
YCSCR9	DET2_ON	1	1	0	0	0	1
	HSEL_MIX_Y	6	6	0	0	0	6
	VSEL_MIX_Y	6	6	0	0	0	6
	HVSEL_MIX_Y	0	0	0	0	0	0
YCSCR12	DET2_MIX_C	0	0	0	0	0	0
	DET2_MIX_Y	2	2	0	0	0	0
	FIL2_MODE_2D	1	1	0	0	0	1
	FIL2_NARROW_2D	1	1	1	1	1	1

chanhvinh.com

30.7 Connection Example

Figure 30.39 shows a pin connection example of this module.

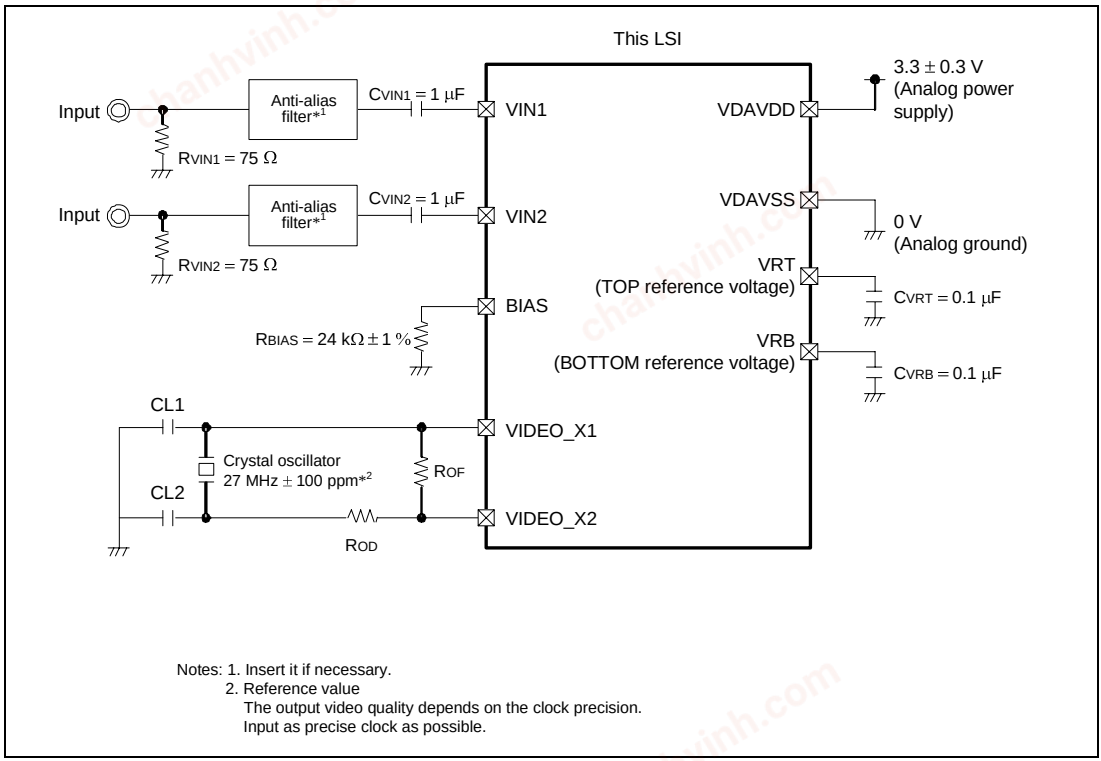

Notes: 1. Insert it if necessary.
2. Reference value
The output video quality depends on the clock precision.
Input as precise clock as possible.

Figure 30.39 Pin Connection Example

chanhvinh.com

chanhvinh.com
chanhvinh.com
chanhvinh.com

chanhvinh.com

Section 31 Video Display Controller 4 (1): Overview

31.1 Features

The video display controller 4 consists of the following six blocks. For the image synthesis, two graphics planes + video image or three graphics planes can be selected.

1. Input controller: Input video image selection, sync signal adjustment, horizontal noise reduction, and brightness adjustment, gain adjustment, and YCbCr↔GBR conversion using a color matrix
2. Scaler: Scale up, scale down, and rotation of input video images using the frame buffer, and repeated recording of the specified number of fields in the frame buffer
3. Image quality improver: Black stretch, LTI/sharpness, and YCbCr↔GBR conversion using a color matrix
4. Image synthesizer: Synthesis of two graphics planes + video image or three graphics planes
5. Output controller: Brightness/contrast adjustment, gamma correction, dither processing, output format conversion, control signal output for TFT-LCD panel
6. System controller: Interrupt control, panel clock control, CLUT table select signal status flag output

The functions of video display controller 4 are listed in table 31.1.

chanhvinh.com

Table 31.1 Features of Video Display Controller 4

Item	Function
Operating frequency	Video input clock: 27/54 MHz (for video image), 66.67 MHz or less (for RGB video image) Panel clock: 66.67 MHz or less (depends on the panel specifications)
Input video image specification	• 8-bit input conforming to ITU-R BT.656 standard (27 MHz) • 8-bit input conforming to ITU-R BT.601 standard (27 MHz, interlace signal) • 8-bit input conforming to ITU-R BT.601 standard (54 MHz, progressive signal) • Digital pin input: YCbCr444, RGB888, RGB666, and RGB565 video image • Digital pin input size: Maximum input video image size to be set*: 1024 pixels × 1024 lines (horizontal × vertical) Note: * Depends on the AC characteristics of the connected device. • Examples of input video image size: SVGA (800 × 600), WVGA (800 × 480), VGA (640 × 480), WAVGA (480 × 240), QVGA in landscape (320 × 240), QVGA in portrait (240 × 320)
Video image recording function	• Storing the video image in the YCbCr422/RGB565/RGB888 format at a rate of 1/1, 1/2, 1/4, or 1/8 field. • Maximum video image size to be stored: ×1 size of input video image
Video image quality adjustment function	Contrast adjustment, brightness adjustment, horizontal noise reduction, black stretch, LTI/sharpness
Video image scaling processing	Vertical: ×1/8 to ×8, linear/hold interpolation Horizontal: ×1/8 to ×8, linear/hold interpolation IP conversion can be performed by adjusting the initial phase.
Video image rotation function	0/90/180/270 degree rotation and horizontal mirroring (with image renderer, exclusive access control)

chanhvinh.com

Item	Function
Graphics	• Number of graphic planes: Three planes (graphics 1, graphics 2, and graphics 3) • Supported pixel formats: — RGB565 progressive format (α: none, R: 5 bits, G: 6 bits, B: 5 bits; 16 bits in total) — RGB888 progressive format (α: none, R: 8 bits, G: 8 bits, B: 8 bits; 24 bits in total) — α RGB1555 progressive format (α: 1 bit, R: 5 bits, G: 5 bits, B: 5 bits; 16 bits in total) — α RGB4444 progressive format (α: 4 bits, R: 4 bits, G: 4 bits, B: 4 bits; 16 bits in total) — α RGB8888 progressive format (α: 8 bits, R: 8 bits, G: 8 bits, B: 8 bits; 32 bits in total) — CLUT8 progressive format (CLUT: 8 bits) — CLUT4 progressive format (CLUT: 4 bits) — CLUT1 progressive format (CLUT: 1 bits) — YCbCr422 progressive format (Y: 8 bits, Cb/Cr: 8 bits; 16 bits in total) (only for graphics 1) • Maximum image size to be read: 1024 pixels × 1024 lines (horizontal × vertical)
Graphics function	Alpha blending in rectangular area: Mixes images according to transparency rate α in the specified area (fade-in and fade-out functions are available.) Chroma-key: Mixes images using the specified RGB color and CLUT value according to transparency rate α. Alpha blending in one pixel units: Mixes images according to transparency rate α when the target graphics image is in the αRGB1555, αRGB4444, αRGB8888, or CLUT8/4/1 format. For each dot, the priority among the α values of the above functions is as follows: Alpha blending in rectangular area > Chroma-key > Alpha blending in one pixel units
Output video image size	Maximum output video image size to be set*: 1999 pixels × 2035 lines (horizontal × vertical) Note: * Depends on the AC characteristics of the display panel. Examples of output video image size: • SVGA (800 × 600), WVGA (800 × 480), • VGA (640 × 480), WQVGA (480 × 240), • QVGA size in landscape (320 × 240) • QVGA size in portrait (240 × 320)

chanhvinh.com

Item	Function
Output video image format	• RGB888 progressive video output (24-bit parallel output) • RGB666 progressive video output (18-bit parallel output) • RGB565 progressive video output (16-bit parallel output) • RGB888 progressive video output (8-bit serial output)
Panel output adjustment	Panel brightness/contrast adjustment, RGB gamma correction, dither processing, output format conversion
Sync signal output	Control signal output for the TFT-LCD panel
Interrupt output	• Vsync signal for video image input/output • Line interrupt output (can be output on a desired line.) • Erroneous Vsync cycle detection signal for video input • Field write completion signal • Overflow/underflow signal for the internal buffer

chanhvinh.com

31.2 Block Diagram

Figures 31.1 and 31.2 show the entire block diagram of this module. For details, see the description of each block.

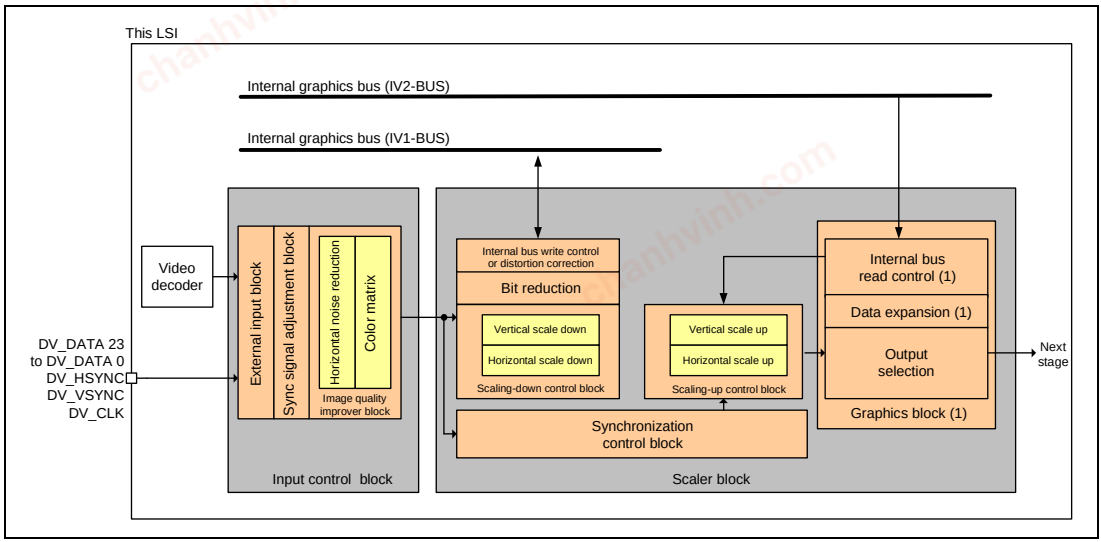

Figure 31.1 Video Display Controller 4 Former Stage Block Diagram

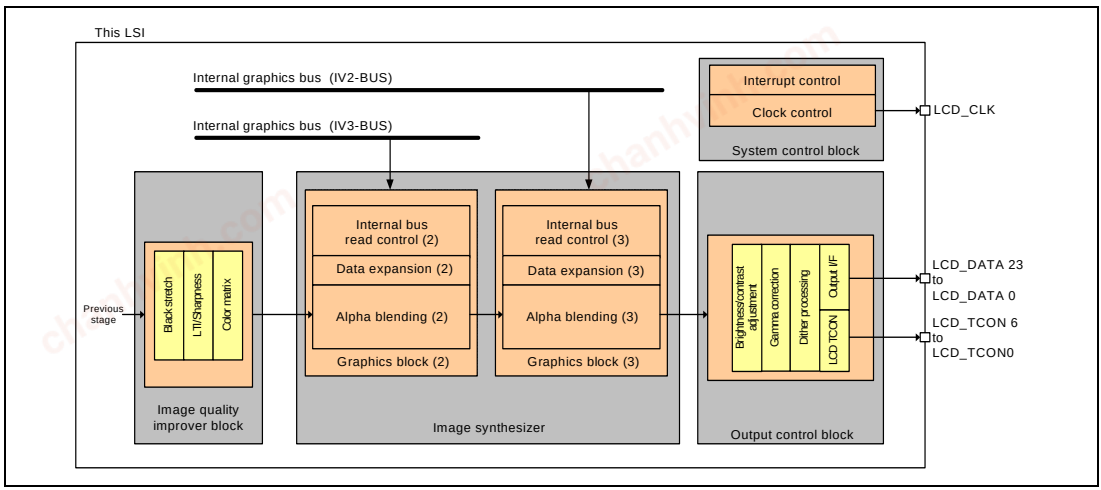

Figure 31.2 Video Display Controller 4 Latter Stage Block Diagram

chanhvinh.com

31.3 Input/Output Pins

Table 31.2 shows the pin configuration.

Table 31.2 Pin Configuration

Symbol	I/O	Pin Name	Function
DV_CLK	Input	External input clock	External input clock pin
DV_VSYNC	Input	External input Vsync	External input Vsync signal pin
DV_HSYNC	Input	External input Hsync	External input Hsync signal pin
DV_DATA 23 to DV_DATA 0	Input	External input video image data	External input video image data pin
LCD_CLK	Output	Panel clock	Panel output clock pin
LCD_DATA 23 to LCD_DATA 0	Output	Video image data for panel	Panel output video image data pin
LCD_TCON 6 to LCD_TCON 0	Output	Control signal for panel	Panel output timing control pin
LCD_EXTCLK	Input	Panel clock source	Panel clock source input pin

chanhvinh.com

31.4 Clocks

There are two clocks to be mainly used by the video display controller 4: the video image clock and pixel clock.

The video image clock is used while the video image is processed in the input controller, passed to the scale-down control block in the scaler, and then written to the buffer (internal bus write control). When the INP_SEL bit is 0 (video decoder output selected) in INP_SEL_CNT of the input controller, the VIDEO_X1 clock (27 MHz) is used as the video image clock. When INP_SEL is 1 (external input pin selected), the DV_CLK clock is used as the video image clock.

The pixel clock is used in graphics read-out processing by the scaler (internal bus read controller) through output controller processing. When the parallel RGB output is selected in the output controller, the frequencies of the pixel clock and panel clock (LCD_CLK) are the same. The panel clock can be selected from the video image clock, LCD_EXTCLK, and peripheral bus clock 1 (P1ϕ) with the PANEL_ICKSEL[1:0] bits in SYSCNT_PANEL_CLK of the system controller. When the serial RGB output (3/4 speed mode) is selected in the output controller, the pixel clock frequency is 1/3 or 1/4 the panel clock (LCD_CLK) frequency.

Note: Points to be aware of when using LCD_EXTCLK
The LCD_EXTCLK signal is multiplexed in three locations: pins PE0, PH5, and PG27. However, it is recommended that pins PE0 and PG27 be used when the digital video decoder is employed. Using pin PH5 can result in the generation of noise on the analog input screen.

chanhvinh.com

31.5 Hsync and Vsync Signals

Hsync and Vsync signals to be used in the logic stage following the scale-up control block of the scaler are generated by the synchronization control block of the scaler. Since the Hsync and Vsync signals are used as the reference signals for the LCD TCON, which generates various LCD panel driving timings, they are also the reference signals for the control signals (LCD_TCON6 to LCD_TCON0 pins) passed to the LCD panel.

The output Hsync signal always operates at a free-running frequency, and the horizontal period is set with SCL0_FRC4.RES_FH[10:0]. On the other hand, the output Vsync signal is selected from the external input (video decoder or digital pin input) and free-running Vsync signals with SCL0_FRC3.RES_VS_SEL of the scaler.

(1) External Input Vsync

In this mode, the output Vsync signal is generated according to an external input Vsync signal. For displaying video image input from the video decoder or a digital pin on the panel, always use this mode. However, the output Hsync signal is free running even in this mode. Figure 31.3 shows the timing of external input Vsync signal.

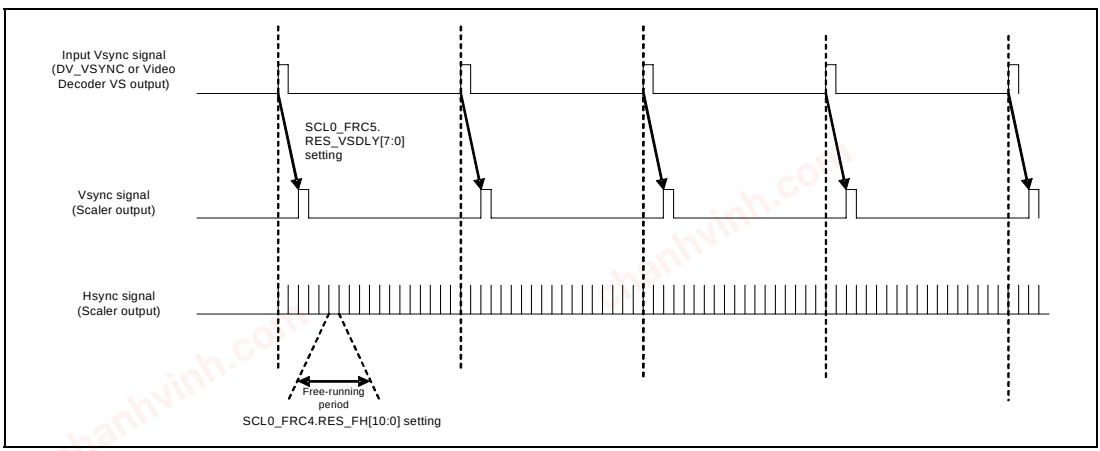

Figure 31.3 External Input Vsync Timing

chanhvinh.com

(2) Free-Running Vsync

In this mode, the Vsync signal is generated according to the pixel clock (free running). The vertical period is selected with SCL0_FRC4.RES_FV[10:0]. The output Hsync signal is also free running. Figure 31.4 shows the timing.

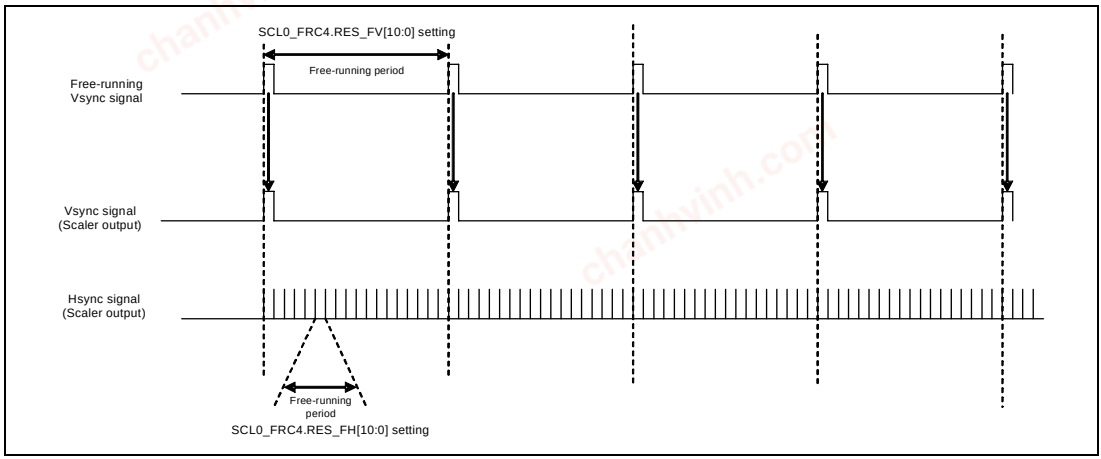

Figure 31.4 Free Running Vsync Timing

(3) Sync Signal Selection

Table 31.3 shows examples of sync signal selection.

Table 31.3 Sync Signal Selection

External Video Input	Graphics	Vsync Signal Selected
Not displayed	Not displayed	Not used
Not displayed	Displayed	Free-running Vsync
Displayed	Not displayed	External input Vsync
Displayed	Displayed	External input Vsync
Recorded	Not displayed	Not used
Recorded	Displayed	Free-running Vsync

(4) Usage Note on Changing Vsync Signal Selections

When the Vsync signal selection is changed, the output Vsync signal is discontinuous, resulting in disordered panel display. In this case, perform the mute processing according to the panel specification as necessary and change the Vsync signal selection.

chanhvinh.com

chanhvinh.com
chanhvinh.com
chanhvinh.com

chanhvinh.com

Section 32 Video Display Controller 4 (2): Input Controller

32.1 Input Controller Functions

32.1.1 Overview of Functions

The input controller selects either video decoder output signals or signals supplied via the external input pins, and subjects the signals to synchronization adjustment, horizontal noise reduction, and brightness adjustment, gain adjustment, and YCbCr ↔ GBR conversion using a color matrix.

The functional block diagram of the input controller is shown below.

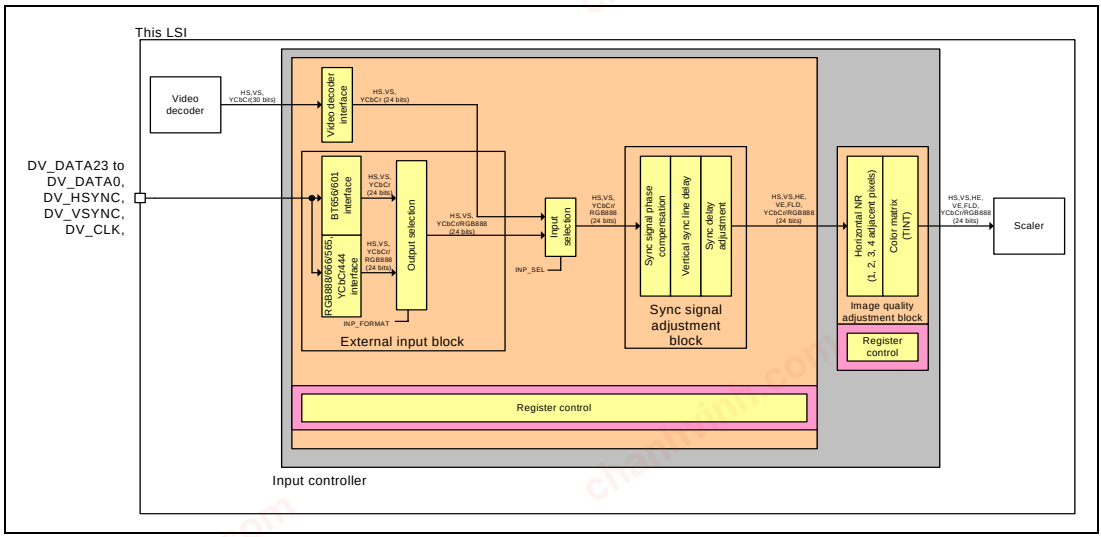

Figure 32.1 Functional Block Diagram of Input Controller

chanhvinh.com

32.1.2 Updating Registers of External Signal Input Block and Sync Signal Adjustment Block

The control registers of the external input block and sync signal adjustment block are updated by setting the relevant update control bit to 1.

For the control registers of the image quality adjustment block, the update timing is controlled using the Vsync signal.

After 1 is set to the bits in the update control register, the contents of the relevant registers are actually modified at the rising edge of the Vsync signal, when the update control register is automatically cleared to 0.

Table 32.1 Register Update Control

Register Name	Bit Name	Initial Value	Description
INP_UPDATE	INP_EXT_UPDATE	0	External Input Block Register Update 0: Registers are not updated. 1: Registers are updated.
INP_UPDATE	INP_IMG_UPDATE	0	Sync Signal Adjustment Block Register Update 0: Registers are not updated. 1: Registers are updated.
IMGCNT_UPDATE	IMGCNT_VEN	0	Image Quality Adjustment Block Register Update 0: Registers are not updated. 1: Registers are updated at the rising edge of the Vsync signal.

chanhvinh.com

32.1.3 Selecting Input Signals

The input controller selects either video decoder output signals or signals supplied via the external input pins.

Table 32.2 Input Signal Selection

Register Name	Bit Name	Initial Value	Description
INP_SEL_CNT	INP_SEL	0	Input Select 0: Video decoder output signals 1: Signals supplied via the external input pins

chanhvinh.com

32.1.4 Controlling Externally Input Video Signals

The externally input video image signals in the YCbCr444, RGB888, RGB666, RGB565, BT656, and BT601 formats can be handled.

The BT656 signals can be used for the 525-line and 59.94 Hz (27.0-MHz) and the 625-line and 50.00-Hz (27.0-MHz) interlace signals.

The BT601 signals can be used for the 8-bit data line 525-line and 59.94 Hz (27.0-MHz) and the 625-line and 50.00-Hz (27.0-MHz) interlace signals and the 525-line and 59.94 Hz (54.0-MHz) and the 625-line and 50.00-Hz (54.0-MHz) progressive signals.

The above signals can be selected by the INP_FORMAT[2:0] bits. Bit endian change and B/R signal swap are controlled by setting the INP_ENDIAN_ON and INP_SWAP_ON bits.

Table 32.3 Externally Input Video Signal Control

Register Name	Bit Name	Initial Value	Description
INP_SEL_CNT	INP_FORMAT[2:0]	000	External Input Format Select 0: YCbCr444, RGB888 1: RGB666 2: RGB565 3: BT656 4: BT601 5 to 7: Setting prohibited
INP_EXT_ SYNC_CNT	INP_ENDIAN_ON	0	External Input Bit Endian Change On/Off Control 0: Off 1: On
INP_EXT_ SYNC_CNT	INP_SWAP_ON	0	External Input B/R Signal Swap On/Off Control 0: Off 1: On

chanhvinh.com

32.1.5 Selecting Clock Edge for Externally Input Signals

The clock edge for receiving the video image signals, Vsync signals, and Hsync signals is individually selected with the INP_PXD_EDGE, INP_VS_EDGE, INP_HS_EDGE bits.

Table 32.4 Externally Input Clock Edge Selection

Register Name	Bit Name	Initial Value	Description
INP_SEL_CNT	INP_PXD_EDGE	0	Clock Edge Select for Capturing External Input Video Image Signals DV_DATA23 to DV_DATA0 0: Rising edge 1: Falling edge
INP_SEL_CNT	INP_VS_EDGE	0	Clock Edge Select for Capturing External Input Vsync Signal DV_VSYNC 0: Rising edge 1: Falling edge
INP_SEL_CNT	INP_HS_EDGE	0	Clock Edge Select for Capturing External Input Hsync Signal DV_HSYNC 0: Rising edge 1: Falling edge

Figure 32.2 shows the typical input timing of externally input signals.

The input signals can be received at the rising edge of the clock signal DV_CLK when the INP_PXD_EDGE, INP_VS_EDGE, and INP_ES_EDGE bits are 0.

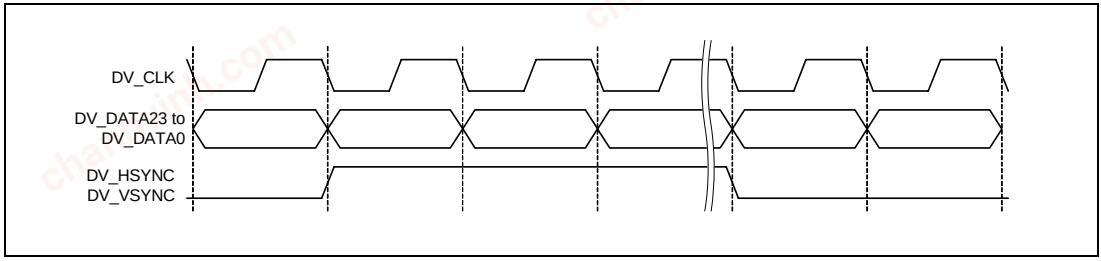

Figure 32.2 Typical Input Timing of Externally Input Signals (Clock Phase)

32.1.6 Externally Input Sync Signal Inversion Control

Inversion of polarity of the Vsync and Hsync signals can be controlled by the INP_VS_INV and INP_HS_INV bits.

chanhvinh.com

Table 32.5 Sync Signal Inversion Control

Register Name	Bit Name	Initial Value	Description
INP_EXT_ SYNC_CNT	INP_VS_INV	0	External Input Vsync Signal DV_VSYNC Inversion Control 0: Not inverted (positive polarity) 1: Inverted (negative polarity)
INP_EXT_ SYNC_CNT	INP_HS_INV	0	External Input Hsync Signal DV_HSYNC Inversion Control 0: Not inverted (positive polarity) 1: Inverted (negative polarity)

32.1.7 Bit Allocation of Externally Input Video Image Signals

Allocation of the externally input video image signal pins DV_DATA to the signals in each format is described below.

(1) YCbCr444/RGB888 Input

When the external input is of YCbCr444/RGB888 format, the video image signal pins DV_DATA are allocated to the internal signals Y/GOUT, Cb/BOUT, Cr/ROUT, as shown in table 32.6.

chanhvinh.com

Table 32.6 Bit Allocation of DV_DATA Pin Inputs when the External Input is of YCbCr444/RGB888

INP_FORMAT[2:0]	0	0	0	0
INP_ENDIAN_ON	0	0	1	1
INP_SWAP_ON	0	1	0	1
DV_DATA23	Cr/ROUT[7]	Cb/BOUT[7]	Cr/ROUT[0]	Cb/BOUT[0]
DV_DATA22	Cr/ROUT[6]	Cb/BOUT[6]	Cr/ROUT[1]	Cb/BOUT[1]
DV_DATA21	Cr/ROUT[5]	Cb/BOUT[5]	Cr/ROUT[2]	Cb/BOUT[2]
DV_DATA20	Cr/ROUT[4]	Cb/BOUT[4]	Cr/ROUT[3]	Cb/BOUT[3]
DV_DATA19	Cr/ROUT[3]	Cb/BOUT[3]	Cr/ROUT[4]	Cb/BOUT[4]
DV_DATA18	Cr/ROUT[2]	Cb/BOUT[2]	Cr/ROUT[5]	Cb/BOUT[5]
DV_DATA17	Cr/ROUT[1]	Cb/BOUT[1]	Cr/ROUT[6]	Cb/BOUT[6]
DV_DATA16	Cr/ROUT[0]	Cb/BOUT[0]	Cr/ROUT[7]	Cb/BOUT[7]
DV_DATA15	Y/GOUT[7]	Y/GOUT[7]	Y/GOUT[0]	Y/GOUT[0]
DV_DATA14	Y/GOUT[6]	Y/GOUT[6]	Y/GOUT[1]	Y/GOUT[1]
DV_DATA13	Y/GOUT[5]	Y/GOUT[5]	Y/GOUT[2]	Y/GOUT[2]
DV_DATA12	Y/GOUT[4]	Y/GOUT[4]	Y/GOUT[3]	Y/GOUT[3]
DV_DATA11	Y/GOUT[3]	Y/GOUT[3]	Y/GOUT[4]	Y/GOUT[4]
DV_DATA10	Y/GOUT[2]	Y/GOUT[2]	Y/GOUT[5]	Y/GOUT[5]
DV_DATA9	Y/GOUT[1]	Y/GOUT[1]	Y/GOUT[6]	Y/GOUT[6]
DV_DATA8	Y/GOUT[0]	Y/GOUT[0]	Y/GOUT[7]	Y/GOUT[7]
DV_DATA7	Cb/BOUT[7]	Cr/ROUT[7]	Cb/BOUT[0]	Cr/ROUT[0]
DV_DATA6	Cb/BOUT[6]	Cr/ROUT[6]	Cb/BOUT[1]	Cr/ROUT[1]
DV_DATA5	Cb/BOUT[5]	Cr/ROUT[5]	Cb/BOUT[2]	Cr/ROUT[2]
DV_DATA4	Cb/BOUT[4]	Cr/ROUT[4]	Cb/BOUT[3]	Cr/ROUT[3]
DV_DATA3	Cb/BOUT[3]	Cr/ROUT[3]	Cb/BOUT[4]	Cr/ROUT[4]
DV_DATA2	Cb/BOUT[2]	Cr/ROUT[2]	Cb/BOUT[5]	Cr/ROUT[5]
DV_DATA1	Cb/BOUT[1]	Cr/ROUT[1]	Cb/BOUT[6]	Cr/ROUT[6]
DV_DATA0	Cb/BOUT[0]	Cr/ROUT[0]	Cb/BOUT[7]	Cr/ROUT[7]

chanhvinh.com

(2) RGB666 Input

When the external input is of RGB666 format, the video image signal pins DV_DATA are allocated to the internal signals GOUT, BOUT, ROUT as shown in table 32.7.

The internal signals GOUT, BOUT, ROUT to which the video image signal pins DV_DATA are allocated are output as a 24-bit video image from the RGB666 interface with the following formulae.

G[7:0] = GOUT[7:2] × 255 ÷ 63

B[7:0] = BOUT[7:2] × 255 ÷ 63

R[7:0] = ROUT[7:2] × 255 ÷ 63

Table 32.7 Bit Allocation of DV_DATA Pin Inputs When the External Input is of RGB666

INP_FORMAT[2:0]	**1**	**1**	**1**	**1**
INP_ENDIAN_ON	**0**	**0**	**1**	**1**
INP_SWAP_ON	**0**	**1**	**0**	**1**
DV_DATA17	ROUT[7]	BOUT[7]	ROUT[2]	BOUT[2]
DV_DATA16	ROUT[6]	BOUT[6]	ROUT[3]	BOUT[3]
DV_DATA15	ROUT[5]	BOUT[5]	ROUT[4]	BOUT[4]
DV_DATA14	ROUT[4]	BOUT[4]	ROUT[5]	BOUT[5]
DV_DATA13	ROUT[3]	BOUT[3]	ROUT[6]	BOUT[6]
DV_DATA12	ROUT[2]	BOUT[2]	ROUT[7]	BOUT[7]
DV_DATA11	GOUT[7]	GOUT[7]	GOUT[2]	GOUT[2]
DV_DATA10	GOUT[6]	GOUT[6]	GOUT[3]	GOUT[3]
DV_DATA9	GOUT[5]	GOUT[5]	GOUT[4]	GOUT[4]
DV_DATA8	GOUT[4]	GOUT[4]	GOUT[5]	GOUT[5]
DV_DATA7	GOUT[3]	GOUT[3]	GOUT[6]	GOUT[6]
DV_DATA6	GOUT[2]	GOUT[2]	GOUT[7]	GOUT[7]
DV_DATA5	BOUT[7]	ROUT[7]	BOUT[2]	ROUT[2]
DV_DATA4	BOUT[6]	ROUT[6]	BOUT[3]	ROUT[3]
DV_DATA3	BOUT[5]	ROUT[5]	BOUT[4]	ROUT[4]
DV_DATA2	BOUT[4]	ROUT[4]	BOUT[5]	ROUT[5]
DV_DATA1	BOUT[3]	ROUT[3]	BOUT[6]	ROUT[6]
DV_DATA0	BOUT[2]	ROUT[2]	BOUT[7]	ROUT[7]

chanhvinh.com

(3) RGB565 Input

When the external input is of RGB565 format, the video image signal pins DV_DATA are allocated to the internal signals GOUT, BOUT, ROUT as shown in table 32.8.

The internal signals GOUT, BOUT, ROUT to which the video image signal pins DV_DATA are allocated are output as a 24-bit video image from the RGB565 interface with the following formulae.

G[7:0] = GOUT[7:2] × 255 ÷ 63

B[7:0] = BOUT[7:3] × 255 ÷ 31

R[7:0] = ROUT[7:3] × 255 ÷ 31

Table 32.8 Bit Allocation of DV_DATA Pin Inputs When the External Input is of RGB565

INP_FORMAT[2:0]	2	2	2	2
INP_ENDIAN_ON	0	0	1	1
INP_SWAP_ON	0	1	0	1
DV_DATA15	ROUT[7]	BOUT[7]	ROUT[3]	BOUT[3]
DV_DATA14	ROUT[6]	BOUT[6]	ROUT[4]	BOUT[4]
DV_DATA13	ROUT[5]	BOUT[5]	ROUT[5]	BOUT[5]
DV_DATA12	ROUT[4]	BOUT[4]	ROUT[6]	BOUT[6]
DV_DATA11	ROUT[3]	BOUT[3]	ROUT[7]	BOUT[7]
DV_DATA10	GOUT[7]	GOUT[7]	GOUT[2]	GOUT[2]
DV_DATA9	GOUT[6]	GOUT[6]	GOUT[3]	GOUT[3]
DV_DATA8	GOUT[5]	GOUT[5]	GOUT[4]	GOUT[4]
DV_DATA7	GOUT[4]	GOUT[4]	GOUT[5]	GOUT[5]
DV_DATA6	GOUT[3]	GOUT[3]	GOUT[6]	GOUT[6]
DV_DATA5	GOUT[2]	GOUT[2]	GOUT[7]	GOUT[7]
DV_DATA4	BOUT[7]	ROUT[7]	BOUT[3]	ROUT[3]
DV_DATA3	BOUT[6]	ROUT[6]	BOUT[4]	ROUT[4]
DV_DATA2	BOUT[5]	ROUT[5]	BOUT[5]	ROUT[5]
DV_DATA1	BOUT[4]	ROUT[4]	BOUT[6]	ROUT[6]
DV_DATA0	BOUT[3]	ROUT[3]	BOUT[7]	ROUT[7]

chanhvinh.com

(4) BT656/BT601 Input

When the external input is of BT656 or BT601 format, the video image signal pins DV_DATA are allocated to the internal signal BTOUT, as shown in table 32.9.

The internal signal BTOUT to which the video image signal pins DV_DATA are allocated is expanded to the YCbCr signal.

For expansion to the YCbCr signal, see section 32.1.11, BT656/BT601 Format Setting.

Table 32.9 Bit Allocation of DV_DATA Pin Inputs When the External Input is of BT656 or BT601

INP_FORMAT[2:0]	3 to 4	3 to 4
INP_ENDIAN_ON	**0**	**1**
INP_SWAP_ON	**0**	**0**
DV_DATA7	BTOUT[7]	BTOUT[0]
DV_DATA6	BTOUT[6]	BTOUT[1]
DV_DATA5	BTOUT[5]	BTOUT[2]
DV_DATA4	BTOUT[4]	BTOUT[3]
DV_DATA3	BTOUT[3]	BTOUT[4]
DV_DATA2	BTOUT[2]	BTOUT[5]
DV_DATA1	BTOUT[1]	BTOUT[6]
DV_DATA0	BTOUT[0]	BTOUT[7]

chanhvinh.com

32.1.8 Typical Signal Timing of BT601 Format

Figures 32.3 and 32.4 show the horizontal timings and figures 32.5 and 32.6 show the vertical timings of the BT601 format.

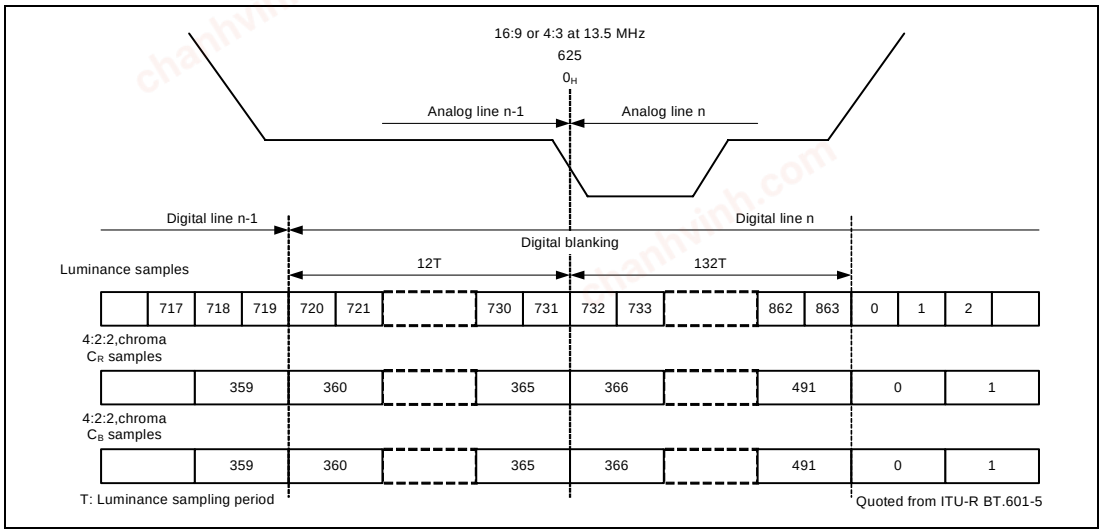

Figure 32.3 BT601 Horizontal Timing (625 Lines/50.00 Hz)

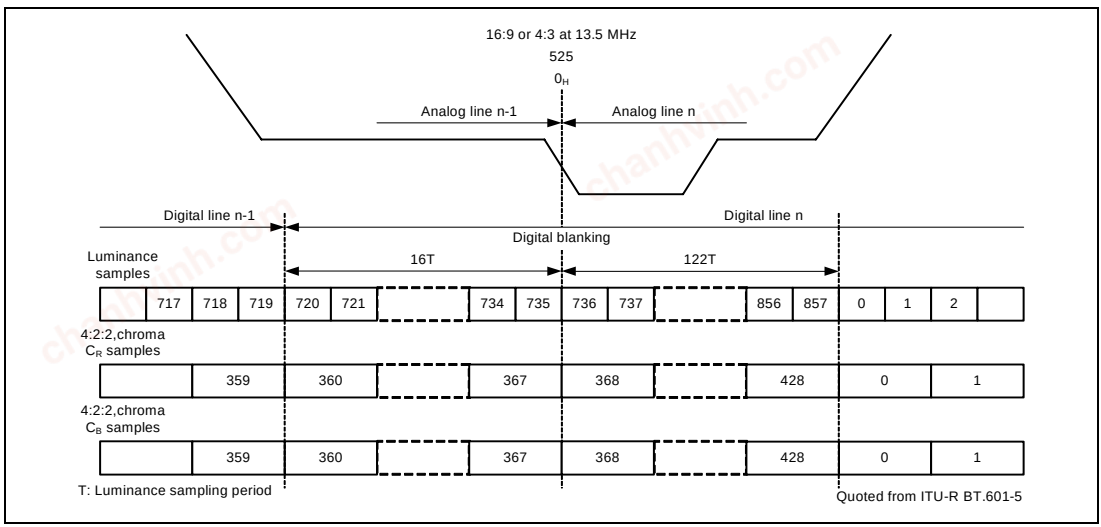

Figure 32.4 BT601 Horizontal Timing (525 Lines/59.94 Hz)

chanhvinh.com

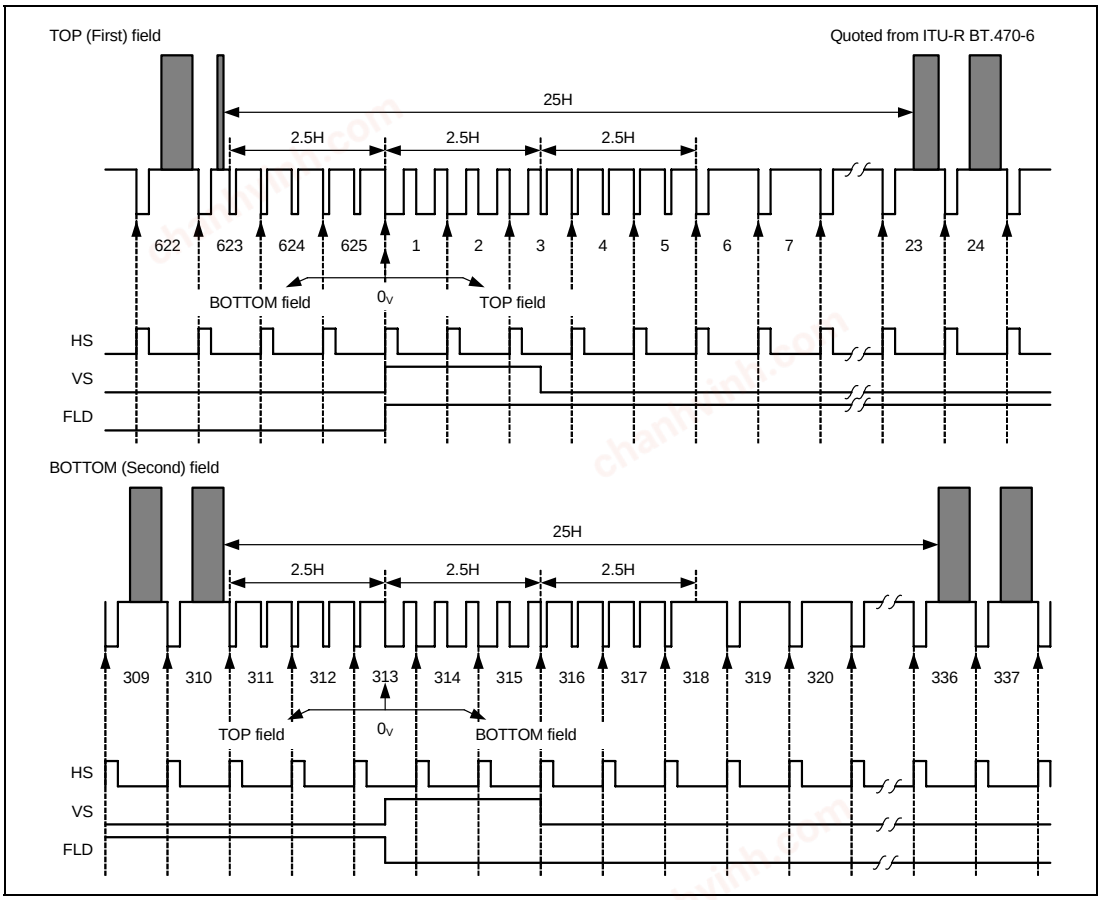

Figure 32.5 BT601 Vertical Timing (625 Lines/50.00 Hz)

chanhvinh.com

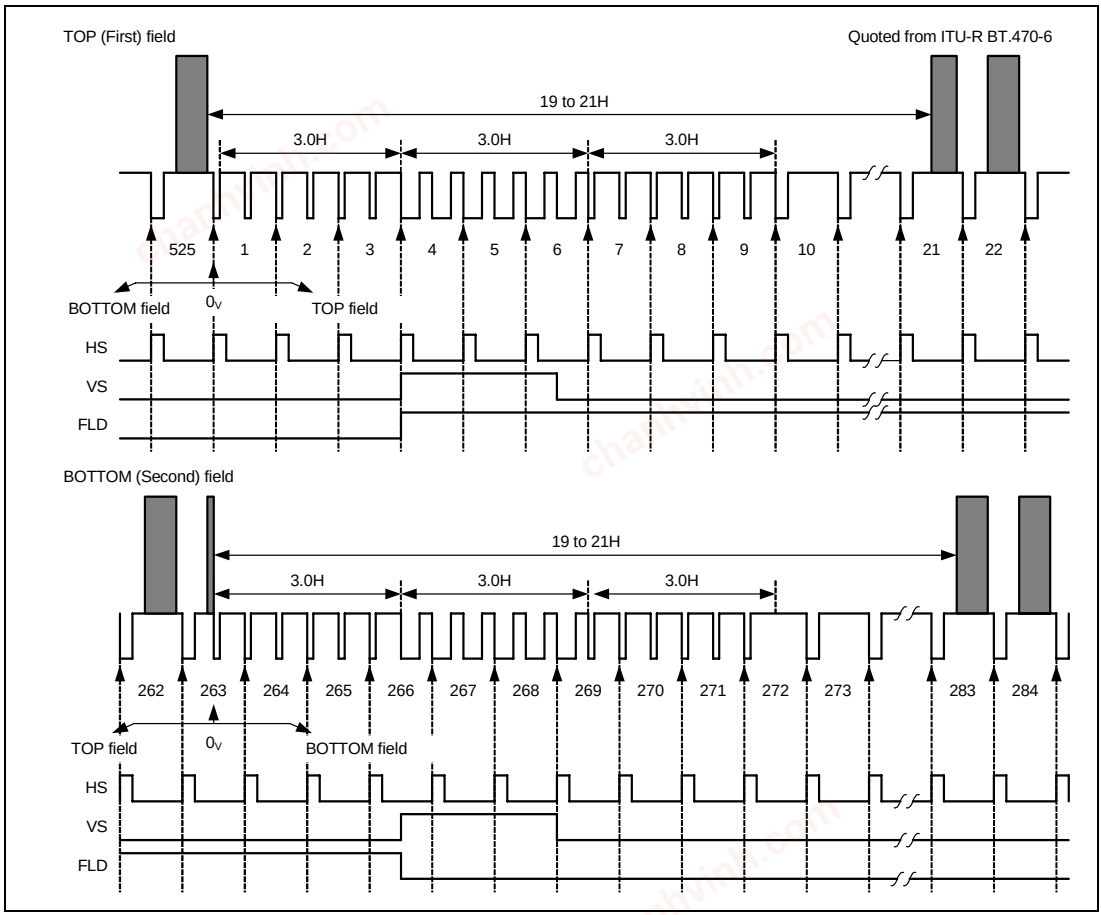

Figure 32.6 BT601 Vertical Timing (525 Lines/59.94 Hz)

chanhvinh.com

32.1.9 Typical Signal Timing of BT656 Format

Figures 32.7 and 32.8 show the horizontal timings of the BT601 format.

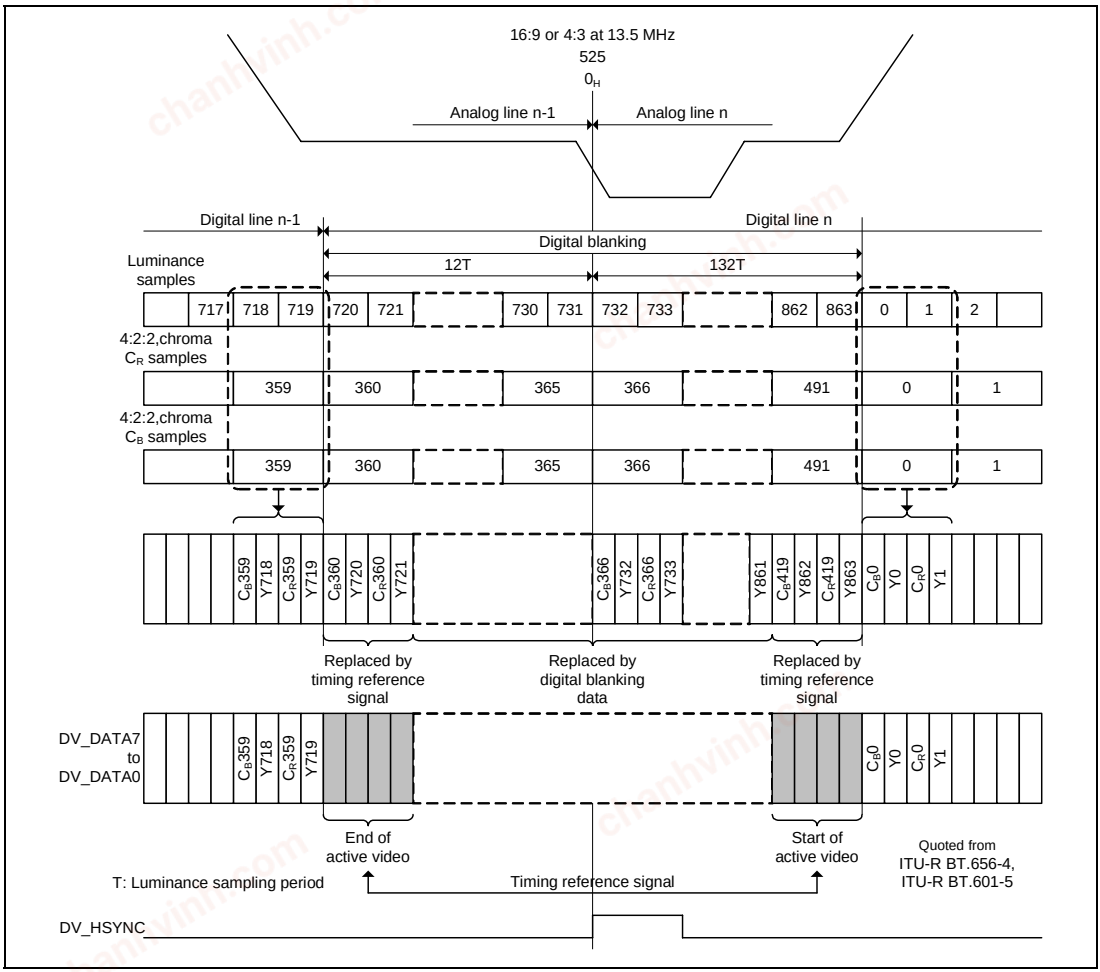

Figure 32.7 BT656 Horizontal Timing (625 Lines/50.00 Hz)

chanhvinh.com

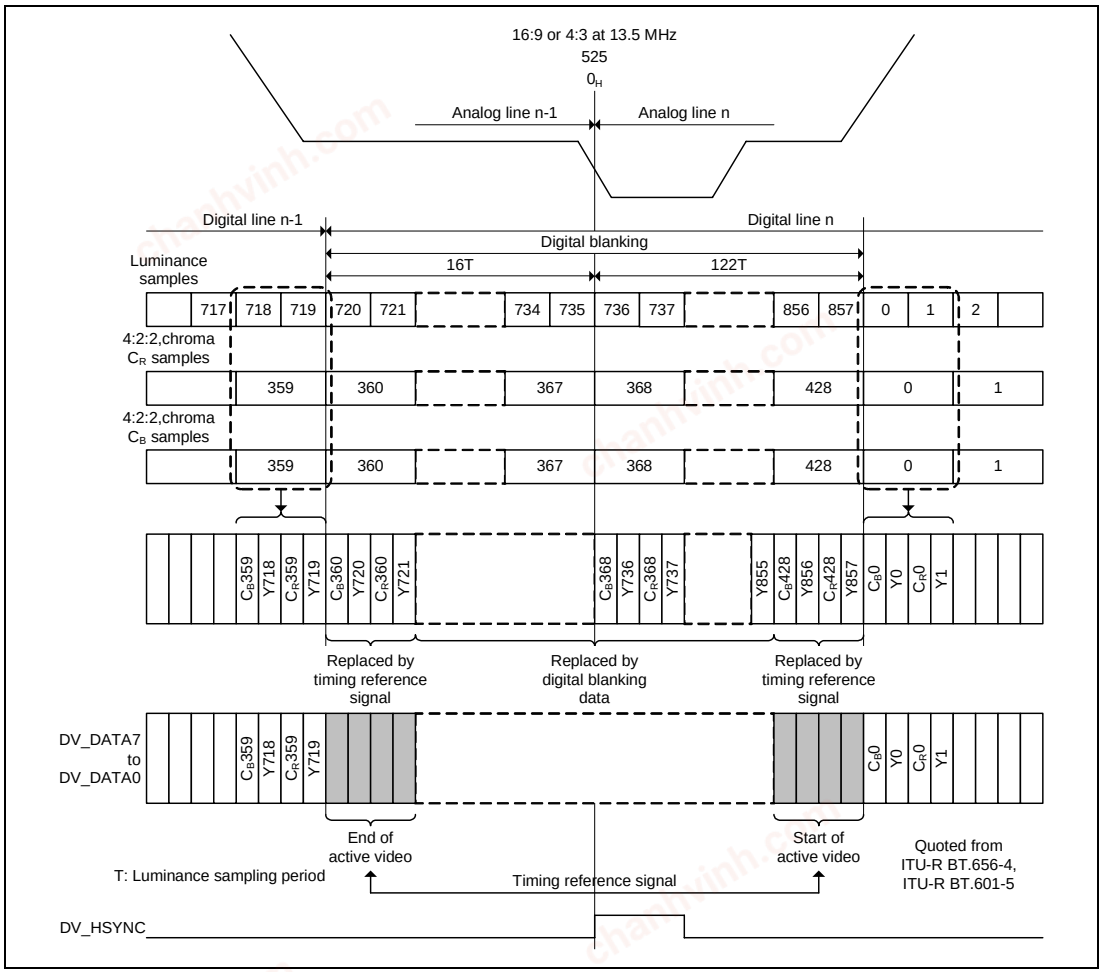

Figure 32.8 BT656 Horizontal Timing (525 Lines/59.94 Hz)

chanhvinh.com

32.1.10 SAV/EAV Code in BT656 Format

Table 32.10 shows the timing of inserting the SAV/EAV code in the BT656 format. Bit information is shown in tables 32.11 and 32.12. This module does not refer to the parity bits P3 to P0 shown in table 32.12.

Table 32.10 SAV/EAV Code Insertion Timing (Line)

		625	525
V-digital field blanking			
Field 1	Start (V = 1)	Line 624	Line 1
	Finish (V = 0)	Line 23	Line 20
Field 2	Start (V = 1)	Line 311	Line 264
	Finish (V = 0)	Line 336	Line 283
V-digital field blanking			
Field 1	F = 0	Line 1	Line 4
Field 2	F = 1	Line 313	Line 266

chanhvinh.com

Table 32.11 SAV/EAV Code Bit Information (1)

Data Bit Number	1st Word (FF)	2nd Word (00)	3rd Word (00)	4th Word (XY)
7 (MSB)	1	0	0	1
6	1	0	0	F
5	1	0	0	V
4	1	0	0	H
3	1	0	0	P3
2	1	0	0	P2
1	1	0	0	P1
0	1	0	0	P0

[Legend]
F = 0 during field 1
F = 1 during field 2
V = 0 elsewhere
V = 1 during field blanking
H = 0 is SAV
H = 1 is EAV

Table 32.12 SAV/EAV Code Bit Information (2)

F	V	H	P3	P2	P1	P0
0	0	0	0	0	0	0
0	0	1	1	1	0	1
0	1	0	1	0	1	1
0	1	1	0	1	1	0
1	0	0	0	1	1	1
1	0	1	1	0	1	0
1	1	0	1	1	0	0
1	1	1	0	0	0	1

chanhvinh.com

Figures 32.9 and 32.10 show the SAV/EAV code tables.

		One Horizontal Period																	
		EAV				H blank	SAV				Valid area								
		1	2	3	4		285	286	287	288	289	290	291	292	…	1725	1726	1727	1728
Field1 (top)	1	FF	00	00	B6		FF	00	00	AB	Digital Blanking Data								
	:	FF	00	00	B6		FF	00	00	AB									
	22	FF	00	00	B6		FF	00	00	AB									
	23	FF	00	00	9D		FF	00	00	80	Cb0	Y0	Cr0	Y1	…	Cb718	Y718	Cr718	Y719
	:	FF	00	00	9D		FF	00	00	80	:•								:
	:	FF	00	00	9D		FF	00	00	80	:								:
	:	FF	00	00	9D		FF	00	00	80	:	Valid pixel data area							:
	:	FF	00	00	9D		FF	00	00	80	:								:
	:	FF	00	00	9D		FF	00	00	80	:								:
	310	FF	00	00	9D		FF	00	00	80	Cb0	Y0	Cr0	Y1	…	Cb718	Y718	Cr718	Y719
	311	FF	00	00	B6		FF	00	00	AB	Digital Blanking Data								
	312	FF	00	00	B6		FF	00	00	AB									
Field2 (bottom)	313	FF	00	00	F1		FF	00	00	EC	Digital Blanking Data								
	:	FF	00	00	F1		FF	00	00	EC									
	335	FF	00	00	F1		FF	00	00	EC									
	336	FF	00	00	DA		FF	00	00	C7	Cb0	Y0	Cr0	Y1	…	Cb718	Y718	Cr718	Y719
	:	FF	00	00	DA		FF	00	00	C7	:								:
	:	FF	00	00	DA		FF	00	00	C7	:								:
	:	FF	00	00	DA		FF	00	00	C7	:	Valid pixel data area							:
	:	FF	00	00	DA		FF	00	00	C7	:								:
	:	FF	00	00	DA		FF	00	00	C7	:								:
	623	FF	00	00	DA		FF	00	00	C7	Cb0	Y0	Cr0	Y1	…	Cb718	Y718	Cr718	Y719
	624	FF	00	00	F1		FF	00	00	EC	Digital Blanking Data								
	625	FF	00	00	F1		FF	00	00	EC									

Figure 32.9 SAV/EAV Code in BT656 Format (625 Lines/50.00 Hz)

chanhvinh.com

		One Horizontal Period																
		EAV				H blank	SAV				Valid area							
		1	2	3	4		273	274	275	276	277	278	279	280	…	1713	1714	1715	1716
Field2	1	FF	00	00	F1		FF	00	00	EC	Digital Blanking Data								
	2	FF	00	00	F1		FF	00	00	EC									
	3	FF	00	00	F1		FF	00	00	EC									
Field1 (top)	4	FF	00	00	B6		FF	00	00	AB	Digital Blanking Data								
	:	FF	00	00	B6		FF	00	00	AB									
	19	FF	00	00	B6		FF	00	00	AB									
	20	FF	00	00	9D		FF	00	00	80	Cb0	Y0	Cr0	Y1	…	Cb718	Y718	Cr718	Y719
	:	FF	00	00	9D		FF	00	00	80	:								:
	:	FF	00	00	9D		FF	00	00	80	:								:
	:	FF	00	00	9D		FF	00	00	80	:	Valid pixel data area							:
	:	FF	00	00	9D		FF	00	00	80	:								:
	:	FF	00	00	9D		FF	00	00	80	:								:
	263	FF	00	00	9D		FF	00	00	80	Cb0	Y0	Cr0	Y1	…	Cb718	Y718	Cr718	Y719
	264	FF	00	00	B6		FF	00	00	AB	Digital Blanking Data								
	265	FF	00	00	B6		FF	00	00	AB									
Field2 (bottom)	266	FF	00	00	F1		FF	00	00	EC	Digital Blanking Data								
	:	FF	00	00	F1		FF	00	00	EC									
	282	FF	00	00	F1		FF	00	00	EC									
	283	FF	00	00	DA		FF	00	00	C7	Cb0	Y0	Cr0	Y1	…	Cb718	Y718	Cr718	Y719
	:	FF	00	00	DA		FF	00	00	C7	:								:
	:	FF	00	00	DA		FF	00	00	C7	:								:
	:	FF	00	00	DA		FF	00	00	C7	:	Valid pixel data area							:
	:	FF	00	00	DA		FF	00	00	C7	:								:
	:	FF	00	00	DA		FF	00	00	C7	:								:
	525	FF	00	00	DA		FF	00	00	C7	Cb0	Y0	Cr0	Y1	…	Cb718	Y718	Cr718	Y719

Figure 32.10 SAV/EAV Code in BT656 Format (525 Lines/59.94 Hz)

chanhvinh.com

32.1.11 BT656/BT601 Format Setting

The BT656 format can be used for the 525-line and 59.94-Hz and the 625-line and 50.00-Hz interlace signal format.

The BT601 format can be used for the 525-line and 59.94 Hz and the 625-line and 50.00-Hz interlace signal format and progressive signal format.

The Vsync signal timing for the 525-line BT656 format and 625-line BT656 format are different.

The operating mode is set by the INP_F525_625 bit.

Table 32.13 Operating Mode Setting for BT656 Format

Register Name	Bit Name	Initial Value	Description
INP_EXT_SYNC_CNT	INP_F525_625	0	Number of Lines for BT656 Input of External Input System 0: 525 lines 1: 625 lines

When the interlace signals are to be input in BT656/BT601 format, half of 2fH phase timings of the Vsync signal and the Hsync signal are set with the INP_FH50[9:0] bits.

The INP_FH50[9:0] bits are also used for the vertical synchronous phase adjustment block. Therefore, for bit description, see table 32.17.

When the external input is of BT656 format, the reference point of the Hsync signal is set with the INP_H_EDGE_SEL bit.

Table 32.14 Hsync Signal Reference Selection for BT656 Format

Register Name	Bit Name	Initial Value	Description
INP_EXT_SYNC_CNT	INP_H_EDGE_SEL	0	Hsync Signal Reference Select for BT656 Format of External Input System 0: EAV 1: SAV

chanhvinh.com

When the external input is of BT656/BT601 format, the internal signal BTOUT[7:0], which is input from the DV_DATA pins and allocated, is expanded to the 24-bit YCbCr signal.

Expansion timing with respect to the Hsync signal reference is set with the INP_H_POS[1:0] bits.

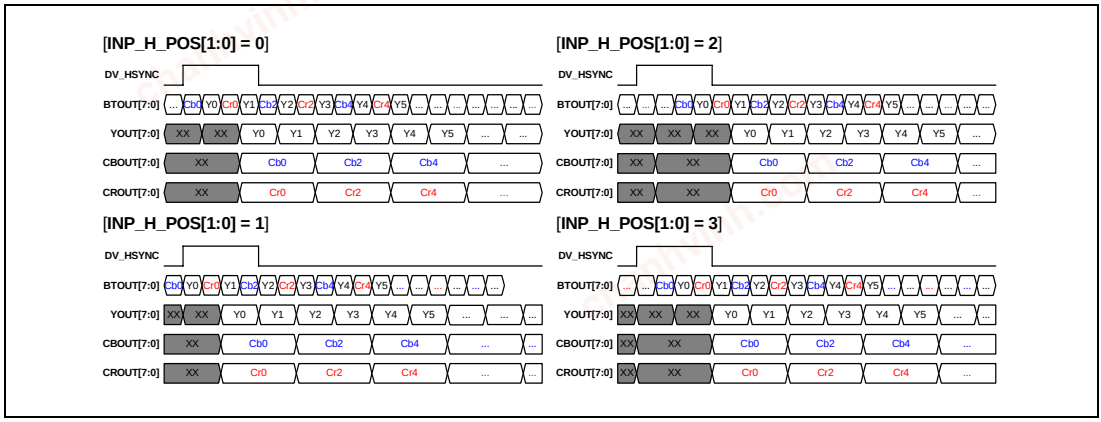

Figure 32.11 YCbCr Data Expansion for BT656/BT601 Input

Table 32.15 Data String Start Timing Selection

Register Name	Bit Name	Initial Value	Description
INP_EXT_SYNC_CNT	INP_H_POS[1:0]	0	Y/Cb/Y/Cr Data String Start Timing with respect to Hsync Reference 0: Cb/Y/Cr/Y 1: Y/Cr/Y/Cb 2: Cr/Y/Cb/Y 3: Y/Cb/Y/Cr

chanhvinh.com

32.1.12 YCbCr444/RBG888/666/565 Input Timing

The YCbCr444/RGB888/666/565 format can be used for the progressive YCbCr/RGB signal.

The sync signal width (H_SYNC, V_SYNC), sync signal polarity (H_POL, V_POL), valid period start position (H_BP, V_BP), valid period end position (H_FP, V_FP), and valid period video width (H_ACTIVE, V_ACTIVE) are shown in table 32.16.

Table 32.16 YCbCr/RGB Signal Reception Timing

Item	Description
External input clock	Maximum external input clock frequency: 66.67 MHz
Vsync signal width (V_SYNC)	Minimum Vsync signal width: 1 CLK
Vsync signal polarity (V_POL)	Positive or negative polarity is selected by the relevant registers.
Vertical valid period start position (V_BP)	From Vsync reference to the head of the video image: 4 lines or more
Vertical valid period video width (V_ACTIVE)	Maximum vertical valid period: 1024 lines
Vertical valid period end position (V_FP)	From the end of the video image to the Vsync reference: 4 lines or more
Hsync signal width (H_SYNC)	Minimum Hsync signal width: 1 CLK
Hsync signal polarity (H_POL)	Positive or negative polarity is selected by the relevant registers.
Horizontal valid period start position (H_BP)	From Hsync reference to the head of the video image: 16 CLK or more
Horizontal valid period video width (H_ACTIVE)	Maximum horizontal valid period: 1024 pixels
Horizontal valid period end position (H_FP)	From the end of the video image to the Hsync reference: 16 CLK or more

chanhvinh.com

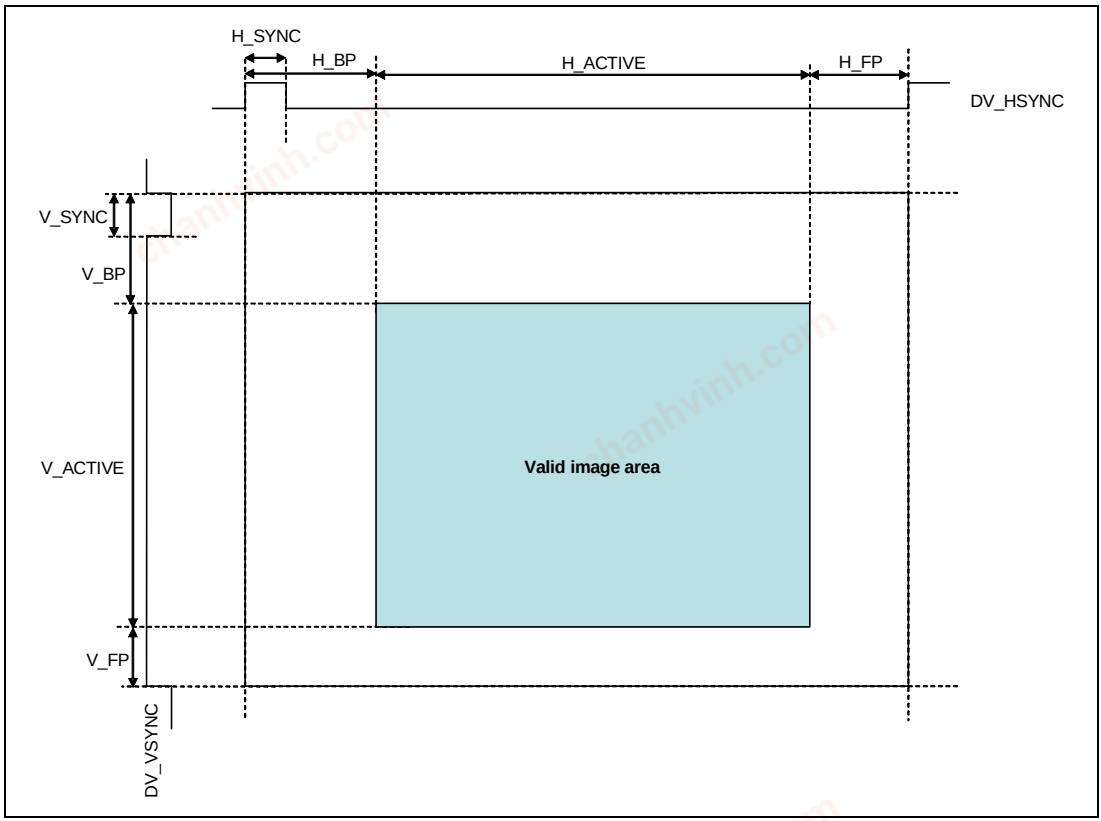

Figure 32.12 YCbCr/RGB Signal Reception Timing

chanhvinh.com

32.1.13 Field Differentiation and Vsync Signal Phase Adjustment

The phase of the input Vsync signal and Hsync signal is detected and the field of the interlace signal is determined. When the reference point of the Vsync signal is detected within ±0.5 horizontal period with respect to the Hsync signal, it is determined as the interlace top field. When the reference point of the Vsync signal is detected outside ±0.5 horizontal period with respect to the Hsync signal, it is determined as the interlace bottom field.

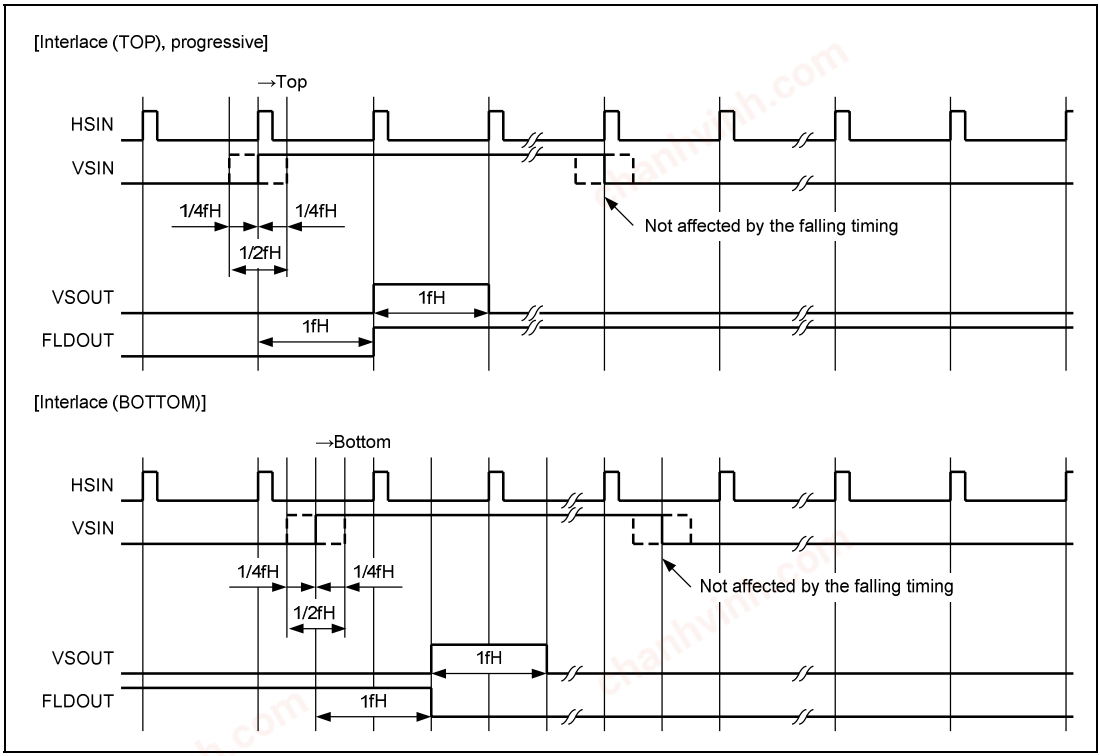

Figure 32.13 Vsync Signal Phase Adjustment

The timings of 1/2fH Vsync signal phase and 1/4fH Vsync signal phase are set with INP_FH50[9:0] and INP_FH25[9:0], respectively.

chanhvinh.com

Table 32.17 Vsync Signal Phase Timing Setting

Register Name	Bit Name	Initial Value	Description
INP_VSYNC_PH_ADJ	INP_HF50[9:0]	858	Vsync Signal 1/2fH Phase Timing Should be 1/2 the horizontal cycle.
INP_VSYNC_PH_ADJ	INP_FH25[9:0]	429	Vsync Signal 1/4fH Phase Timing Should be 1/4 the horizontal cycle.

32.1.14 Vsync Signal Delay Adjustment in Line Units

The Vsync signal line delay adjust block can delay the Vsync signal and the field differentiation signal in line units.

When a video signal with a short vertical front porch is input, the vertical front porch is adjusted.

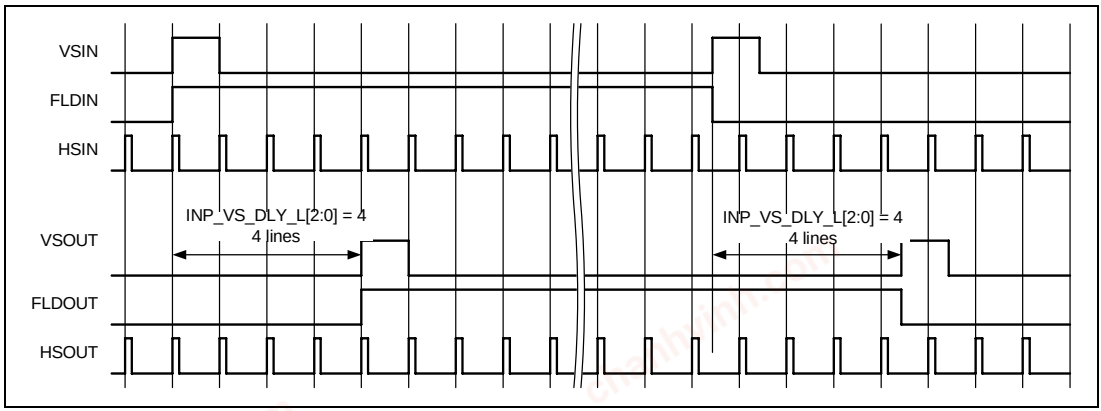

Figure 32.14 Timing of Vsync Signal Delay in Line Units

Table 32.18 Adjustment of Vsync Signal Delay in Line Units

Register Name	Bit Name	Initial Value	Description
INP_DLY_ADJ	INP_VS_DLY_L[2:0]	0	Number of Lines for Delaying Vsync Signal and Field Differentiation Signal Delay amount: 0 to 7 (lines)

chanhvinh.com

32.1.15 Sync Signal Delay Adjustment

Delay can be adjusted independently for the Vsync signal, Hsync signal, and field differentiation signal in the units of clock.

Lacking margin of the horizontal front porch is adjusted according to the input synchronization disturbance.

Table 32.19 Sync Signal Delay Adjustment

Register Name	Bit Name	Initial Value	Description
INP_DLY_ADJ	INP_VS_DLY[7:0]	0	Vsync Signal Delay Amount Delay amount: 0 to 254 (clock cycles)
INP_DLY_ADJ	INP_HS_DLY[7:0]	0	Hsync Signal Delay Amount Delay amount: 0 to 254 (clock cycles)
INP_DLY_ADJ	INP_FLD_DLY[7:0]	0	Field Differentiation Signal Delay Amount Delay amount: 0 to 254 (clock cycles)

32.1.16 Horizontal Noise Reduction

Noise can be reduced according to horizontal pixel reference.

Noise reduction is controlled through noise component frequency band (TAP), noise level (threshold), and noise reduction intensity (gain).

(1) Frequency Band (TAP) Setting for Noise Component

The noise frequency band can be selected independently from the following four types by using the NR1D_Y_TAP[1:0], NR1D_CB_TAP[1:0], and NR1D_CR_TAP[1:0] bits.

When the number of adjacent pixels is one (noise reduction NR1D_Y/CB/CR_TAP is 0):

$$BPF_{(1)} = \frac{1}{4}\left(-1\times Z_{(-1)}, 2\times Z_{(0)}, -1\times Z_{(+1)}\right)$$

When the number of adjacent pixels is two (noise reduction NR1D_Y/CB/CR_TAP is 1):

$$BPF_{(2)} = \frac{1}{4}\left(-1\times Z_{(-2)}, 2\times Z_{(0)}, -1\times Z_{(+2)}\right)$$

chanhvinh.com

When the number of adjacent pixels is three (noise reduction NR1D_Y/CB/CR_TAP is 2):

$$BPF_{(3)} = \frac{1}{4}\left(-1 \times Z_{(-3)}, 2 \times Z_{(0)}, -1 \times Z_{(+3)}\right)$$

When the number of adjacent pixels is four (noise reduction NR1D_Y/CB/CR_TAP is 3):

$$BPF_{(4)} = \frac{1}{4}\left(-1 \times Z_{(-4)}, 2 \times Z_{(0)}, -1 \times Z_{(+4)}\right)$$

Note: $Z_{(0)}$ indicates the target pixel for noise reduction and $Z_{(N)}$ indicates the pixel that is n pixels off from $Z_{(0)}$ In the horizontal direction.

(2) Setting Noise Level (Threshold)

The absolute value of the detected noise amount (BPF output value) is compared with the values of the NR1D_Y_TH[6:0], NR1D_CB_TH[6:0], and NR1D_CR_TH[6:0] bits. When the detected noise amount is greater than NR1D_Y/CB/CR_TH, the absolute value of the detected noise amount is considered as NR1D_Y/CB/CR_TH (fixed value).

ABS($BPF_{(n)}$) ≤ absolute value of detected noise amount when ABS($BPF_{(n)}$) ≤ NR1D_Y/CB/CR_TH: NOISE_ABS = ABS($BPF_{(n)}$)

ABS($BPF_{(n)}$) > absolute value of detected noise amount when ABS($BPF_{(n)}$) > NR1D_Y/CB/CR_TH: NOISE_ABS = NR1D_Y/CB/CR_TH

(3) Setting Noise Reduction Intensity (Gain)

The absolute value of the detected noise amount is multiplied by the value of gain specified by the NR1D_Y_GAIN[1:0], NR1D_CB_GAIN[1:0], and NR1D_CR_GAIN[1:0] bits, and the feedback is calculated for the original signal.

Computation when the amount of detected noise ($BPF_{(n)}$) is negative (–): DOUT = DIN + NOISE_ABS ÷ $2^{(NR1D_Y/CB/CR_GAIN+1)}$

Computation when the amount of detected noise ($BPF_{(n)}$ is positive (+): DOUT = DIN – NOISE_ABS ÷ $2^{(NR1D_Y/CB/CR_GAIN+1)}$

chanhvinh.com

Table 32.20 Horizontal Noise Reduction

Register Name	Bit Name	Initial Value	Description
IMGCNT_NR_CNT0	NR1D_MD	1	Horizontal Noise Reduction Operating Mode 0: R/G/B mode 1: Y/Cb/Cr mode
IMGCNT_NR_CNT0	NR1D_ON	0	Noise Reduction On/Off Control 0: Noise Reduction Off 1: Noise Reduction On
IMGCNT_NR_CNT0	NR1D_Y_TAP[1:0]	0	Y/G Signal TAP Select 0: Adjacent pixel 1: 2 adjacent pixels 2: 3 adjacent pixels 3: 4 adjacent pixels
IMGCNT_NR_CNT0	NR1D_Y_TH[6:0]	8	Maximum Value (Absolute Value) of Y/G Signal Coring Coring is implemented when detected noise amount value ≤ NR1D_Y_TH. Unsigned: 0 to 127 [LSB]
IMGCNT_NR_CNT0	NR1D_Y_GAIN[1:0]	3	Noise Reduction Gain Adjustment of Y/G Signal 0: 1/2 1: 1/4 2: 1/8 3: 1/16
IMGCNT_NR_CNT1	NR1D_CB_TAP[1:0]	0	Cb/B Signal TAP Select 0: Adjacent pixel 1: 2 adjacent pixels 2: 3 adjacent pixels 3: 4 adjacent pixels
IMGCNT_NR_CNT1	NR1D_CB_TH[6:0]	8	Maximum Value (Absolute Value) of Cb/B Signal Coring Coring is implemented when detected noise amount value ≤ NR1D_C_TH. Unsigned: 0 to 127 [LSB]

chanhvinh.com

Bit Name	Bit Name	Initial Value	Description
IMGCNT_NR_CNT1	NR1D_CB_GAIN[1:0]	3	Noise Reduction Gain Adjustment of Cb/B Signal 0: 1/2 1: 1/4 2: 1/8 3: 1/16
IMGCNT_NR_CNT1	NR1D_CR_TAP[1:0]	0	Cr/R Signal TAP Select 0: Adjacent pixel 1: 2 adjacent pixels 2: 3 adjacent pixels 3: 4 adjacent pixels
IMGCNT_NR_CNT1	NR1D_CR_TH[6:0]	8	Maximum Value (Absolute Value) of Cr/R Signal Coring Coring is implemented when detected noise amount value ≤ NR1D_C_TH. Unsigned: 0 to 127 [LSB]
IMGCNT_NR_CNT1	NR1D_CR_GAIN[1:0]	3	Noise Reduction Gain Adjustment of Cr/R Signal 0: 1/2 1: 1/4 2: 1/8 3: 1/16

chanhvinh.com

32.1.17 Color Matrix

By using a color matrix, input signal offsets and nine-axis gain can be adjusted. This enables brightness adjustment, gain adjustment, and YCbCr and GBR mutual conversion.

(1) GBR to GBR Conversion

YGIN_A = YGIN + IMGCNT_MTX_YG – 128

CBBIN_A = CBBIN + IMGCNT_MTX_B – 128

CRRIN_A = CRRIN + IMGCNT_MTX_R – 128

YGOUT = (IMGCNT_MTX_GG×YGIN_A + IMGCNT_MTX_GB×CBBIN_A + IMGCNT_MTX_GR×CRRIN_A) ÷ 256

CBBOUT = (IMGCNT_MTX_BG×YGIN_A + IMGCNT_MTX_BB×CBBIN_A + IMGCNT_MTX_BR×CRRIN_A) ÷ 256

CRROUT = (IMGCNT_MTX_RG×YGIN_A + IMGCNT_MTX_RB×CBBIN_A + IMGCNT_MTX_RR×CRRIN_A) ÷ 256

(2) GBR to YCbCr Conversion

YGIN_A = YGIN + IMGCNT_MTX_YG – 128

CBBIN_A = CBBIN + IMGCNT_MTX_B – 128

CRRIN_A = CRRIN + IMGCNT_MTX_R – 128

YGOUT = (IMGCNT_MTX_GG×YGIN_A + IMGCNT_MTX_GB×CBBIN_A + IMGCNT_MTX_GR×CRRIN_A) ÷ 256

CBBOUT = (IMGCNT_MTX_BG×YGIN_A + IMGCNT_MTX_BB×CBBIN_A + IMGCNT_MTX_BR×CRRIN_A) ÷ 256 + 128

CRROUT = (IMGCNT_MTX_RG×YGIN_A + IMGCNT_MTX_RB×CBBIN_A + IMGCNT_MTX_RR×CRRIN_A) ÷ 256 + 128

chanhvinh.com

Table 32.21 Matrix Coefficient (Typical Value) for SMPTE 293M

	YGIN		CBBIN		CRRIN	
	Coefficient	Set Value	Coefficient	Set Value	Coefficient	Set Value
YGOUT	0.587	IMGCNT_MTX_GG = 150	0.114	IMGCNT_MTX_GB = 29	0.299	IMGCNT_MTX_GR = 77
CBBOUT	–0.331	IMGCNT_MTX_BG = 1963	0.500	IMGCNT_MTX_BB = 128	–0.169	IMGCNT_MTX_BR = 2005
CRROUT	–0.419	IMGCNT_MTX_RG = 1941	–0.081	IMGCNT_MTX_RB = 2027	0.500	IMGCNT_MTX_RR = 128

(3) YCbCr to GBR Conversion

YGIN_A = YGIN + IMGCNT_MTX_YG – 128

CBBIN_A = CBBIN – 128

CRRIN_A = CRRIN – 128

YGOUT = (IMGCNT_MTX_GG×YGIN_A + IMGCNT_MTX_GB×CBBIN_A + IMGCNT_MTX_GR×CRRIN_A) ÷ 256

CBBOUT = (IMGCNT_MTX_BG×YGIN_A + IMGCNT_MTX_BB×CBBIN_A + IMGCNT_MTX_BR×CRRIN_A) ÷ 256

CRROUT = (IMGCNT_MTX_RG×YGIN_A + IMGCNT_MTX_RB×CBBIN_A + IMGCNT_MTX_RR×CRRIN_A) ÷ 256

chanhvinh.com

Table 32.22 Matrix Coefficient (Typical Value) for SMPTE 293M

	YGIN		CBBIN		CRRIN	
	Coefficient	Set Value	Coefficient	Set Value	Coefficient	Set Value
YGOUT	1.000	IMGCNT_MTX_GG = 256	–0.344	IMGCNT_MTX_GB = 1960	–0.714	IMGCNT_MTX_GR = 1865
CBBOUT	1.000	IMGCNT_MTX_BG = 256	1.772	IMGCNT_MTX_BB = 454	0.000	IMGCNT_MTX_BR = 0
CRROUT	1.000	IMGCNT_MTX_RG = 256	0.000	IMGCNT_MTX_RB = 0	1.402	IMGCNT_MTX_RR = 359

(4) YCbCr to YCbCr Conversion

YGIN_A = YGIN + IMGCNT_MTX_YG – 128

CBBIN_A = CBBIN – 128

CRRIN_A = CRRIN – 128

YGOUT = (IMGCNT_MTX_GG×YGIN_A + IMGCNT_MTX_GB×CBBIN_A + IMGCNT_MTX_GR×CRRIN_A) ÷ 256

CBBOUT = (IMGCNT_MTX_BG×YGIN_A + IMGCNT_MTX_BB×CBBIN_A + IMGCNT_MTX_BR×CRRIN_A) ÷ 256 + 128

CRROUT = (IMGCNT_MTX_RG×YGIN_A + IMGCNT_MTX_RB×CBBIN_A + IMGCNT_MTX_RR×CRRIN_A) ÷ 256 + 128

chanhvinh.com

Table 32.23 YCbCr to GBR Conversion

Register Name	Bit Name	Initial Value	Description
IMGCNT_MTX_MODE	IMGCNT_MTX_MD [1:0]	3	Operating Mode 0: GBR → GBR 1: GBR → YCbCr 2: YCbCr → GBR 3: YCbCr → YCbCr
IMGCNT_MTX_YG_ ADJ0	IMGCNT_MTX_YG [7:0]	128	Offset (DC) Adjustment of Y/G Signal Unsigned (0 (-128) to 128 (0) to 255 (+127) [LSB], 512 [LSB])
IMGCNT_MTX_CBB_ ADJ0	IMGCNT_MTX_B [7:0]	128	Offset (DC) Adjustment of B Signal Unsigned (0 (-128) to 128 (0) to 255 (+127) [LSB])
IMGCNT_MTX_CRR_ ADJ0	IMGCNT_MTX_R [7:0]	128	Offset (DC) Adjustment of R Signal Unsigned (0 (-128) to 128 (0) to 255 (+127) [LSB])
IMGCNT_MTX_YG_ ADJ0	IMGCNT_MTX_GG [10:0]	256	Y/G Signal Gain Adjustment for Y/G Signal Output Signed (two's complement) (-1024 to +1023 [LSB], 256 [LSB] = 1.0 [times])
IMGCNT_MTX_YG_ ADJ1	IMGCNT_MTX_GB [10:0]	0	Cb/B Signal Gain Adjustment for Y/G Signal Output Signed (two's complement) (-1024 to +1023 [LSB], 256 [LSB] = 1.0 [times])
IMGCNT_MTX_YG_ ADJ1	IMGCNT_MTX_GR [10:0]	0	Cr/R Signal Gain Adjustment for Y/G Signal Output Signed (two's complement) (-1024 to +1023 [LSB], 256 [LSB] = 1.0 [times])
IMGCNT_MTX_CBB_ ADJ0	IMGCNT_MTX_BG [10:0]	0	Y/G Signal Gain Adjustment for Cb/B Signal Output Signed (two's complement) (-1024 to +1023 [LSB], 256 [LSB] = 1.0 [times])
IMGCNT_MTX_CBB_ ADJ1	IMGCNT_MTX_BB [10:0]	256	Cb/B Signal Gain Adjustment for Cb/B Signal Output Signed (two's complement) (-1024 to +1023 [LSB], 256 [LSB] = 1.0 [times])

chanhvinh.com

Bit Name	Bit Name	Initial Value	Description
IMGCNT_MTX_CBB_ADJ1	IMGCNT_MTX_BR [10:0]	0	Cr/R Signal Gain Adjustment for Cb/B Signal Output Signed (two's complement) (-1024 to +1023 [LSB], 256 [LSB] = 1.0 [times])
IMGCNT_MTX_CRR_ADJ0	IMGCNT_MTX_RG [10:0]	0	Y/G Signal Gain Adjustment for Cr/R Signal Output Signed (two's complement) (-1024 to +1023 [LSB], 256 [LSB] = 1.0 [times])
IMGCNT_MTX_CRR_ADJ1	IMGCNT_MTX_RB [10:0]	0	Cb/B Signal Gain Adjustment for Cr/R Signal Output Signed (two's complement) (-1024 to +1023 [LSB], 256 [LSB] = 1.0 [times])
IMGCNT_MTX_CRR_ADJ1	IMGCNT_MTX_RR [10:0]	256	Cr/R Signal Gain Adjustment for Cr/R Signal Output Signed (two's complement) (-1024 to +1023 [LSB], 256 [LSB] = 1.0 [times])

chanhvinh.com

32.2 Register Descriptions

Tables 32.24 and 32.25 show register Configuration.

- Symbols used in Register Description:

  Initial value: Register value after a power-on reset
  —: Undefined value
  R/W: Readable/writable. The written value can be read.
  R/WC0: Readable/writable. Writing 0 initializes the bit. Writing 1 is ignored.
  R/WC1: Readable/writable. Writing 1 initializes the bit. Writing 0 is ignored.
  R: Read-only. The write value should always be 0.
  —/W: Write-only. The read value is undefined.

Table 32.24 Register Configuration of Input Controller

Name	Abbreviation	R/W	Initial Value	Address	Access Size
External input block register update control register	INP_UPDATE	R/WC1	H'0000 0000	H'FFFF 7400	32/16
Input select control register	INP_SEL_CNT	R/W	H'0000 0000	H'FFFF 7404	32/16
External input sync signal control register	INP_EXT_SYNC_CNT	R/W	H'0000 0000	H'FFFF 7408	32/16
Vsync signal phase adjustment register	INP_VSYNC_PH_ADJ	R/W	H'035A 01AD	H'FFFF 740C	32/16
Sync signal delay adjustment register	INP_DLY_ADJ	R/W	H'0000 0000	H'FFFF 7410	32/16

chanhvinh.com

Table 32.25 Register Configuration of Image Quality Adjustment Block

Name	Abbreviation	R/W	Initial Value	Address	Access Size
Image quality adjustment block register update control register	IMGCNT_UPDATE	R/WC1	H'0000 0000	H'FFFF 7480	32/16
NR control register 0	IMGCNT_NR_CNT0	R/W	H'0010 0803	H'FFFF 7484	32/16
NR control register 1	IMGCNT_NR_CNT1	R/W	H'0803 0803	H'FFFF 7488	32/16
Image quality adjustment block matrix mode register	IMGCNT_MTX_MODE	R/W	H'0000 0003	H'FFFF 74A0	32/16
Image quality adjustment block matrix YG adjustment register 0	IMGCNT_MTX_YG_ADJ0	R/W	H'0080 0100	H'FFFF 74A4	32/16
Image quality adjustment block matrix YG adjustment register 1	IMGCNT_MTX_YG_ADJ1	R/W	H'0000 0000	H'FFFF 74A8	32/16
Image quality adjustment block matrix CBB adjustment register 0	IMGCNT_MTX_CBB_ADJ0	R/W	H'0080 0000	H'FFFF 74AC	32/16
Image quality adjustment block matrix CBB adjustment register 1	IMGCNT_MTX_CBB_ADJ1	R/W	H'0100 0000	H'FFFF 74B0	32/16
Image quality adjustment block matrix CRR adjustment register 0	IMGCNT_MTX_CRR_ADJ0	R/W	H'0080 0000	H'FFFF 74B4	32/16
Image quality adjustment block matrix CRR adjustment register 1	IMGCNT_MTX_CRR_ADJ1	R/W	H'0000 0100	H'FFFF 74B8	32/16

chanhvinh.com

32.2.1 External Input Block Register Update Control Register (INP_UPDATE)

Bit:	31	30	29	28	27	26	25	24	23	22	21	20	19	18	17	16
	—	—	—	—	—	—	—	—	—	—	—	—	—	—	—	—
Initial Value:	0	0	0	0	0	0	0	0	0	0	0	0	0	0	0	0
R/W:	R	R	R	R	R	R	R	R	R	R	R	R	R	R	R	R

Bit:	15	14	13	12	11	10	9	8	7	6	5	4	3	2	1	0
	—	—	—	—	—	—	—	—	—	—	—	INP_EXT_UPDATE	—	—	—	INP_IMG_UPDATE
Initial Value:	0	0	0	0	0	0	0	0	0	0	0	0	0	0	0	0
R/W:	R	R	R	R	R	R	R	R	R	R	R	R/WC1	R	R	R	R/WC1

Bit	Bit Name	Initial Value	R/W	Description
31 to 5	—	All 0	R	Reserved These bits are always read as 0. The write value should always be 0.
4	INP_EXT_UPDATE	0	R/WC1	External Input Block Register Update 0: Registers are not updated. 1: Registers are updated.
3 to 1	—	All 0	R	Reserved These bits are always read as 0. The write value should always be 0.
0	INP_IMG_UPDATE	0	R/WC1	Sync Signal Adjustment Block Register Update 0: Registers are not updated. 1: Registers are updated.

32.2.2 Input Select Control Register (INP_SEL_CNT)

Bit:	31	30	29	28	27	26	25	24	23	22	21	20	19	18	17	16
	—	—	—	—	—	—	—	—	—	—	—	INP_SEL	—	—	—	—
Initial Value:	0	0	0	0	0	0	0	0	0	0	0	0	0	0	0	0
R/W:	R	R	R	R	R	R	R	R	R	R	R	R/W	R	R	R	R

Bit:	15	14	13	12	11	10	9	8	7	6	5	4	3	2	1	0
	—	INP_FORMAT[2:0]			—	—	—	INP_PXD_EDGE	—	—	—	INP_VS_EDGE	—	—	—	INP_HS_EDGE
Initial Value:	0	0	0	0	0	0	0	0	0	0	0	0	0	0	0	0
R/W:	R	R/W	R/W	R/W	R	R	R	R/W	R	R	R	R/W	R	R	R	R/W

chanhvinh.com

Bit	Bit Name	Initial Value	R/W	Description
31 to 21	—	All 0	R	Reserved These bits are always read as 0. The write value should always be 0.
20	INP_SEL	0	R/W	Input Select 0: Video decoder output signals 1: Signals supplied via the external input pins
19 to 15	—	All 0	R	Reserved These bits are always read as 0. The write value should always be 0.
14 to 12	INP_FORMAT [2:0]	0	R/W	External Input Format Select 0: YcbCr444, RGB888 1: RGB666 2: RGB565 3: BT656 4: BT601 5 to 7: Setting prohibited
11 to 9	—	All 0	R	Reserved These bits are always read as 0. The write value should always be 0.
8	INP_PXD_EDGE	0	R/W	Clock Edge Select for Capturing External Input Video Image Signals DV_DATA23 to DV_DATA0 0: Rising edge 1: Falling edge
7 to 5	—	All 0	R	Reserved These bits are always read as 0. The write value should always be 0.
4	INP_VS_EDGE	0	R/W	Clock Edge Select for Capturing External Input Vsync Signals DV_VSYNC 0: Rising edge 1: Falling edge
3 to 1	—	All 0	R	Reserved These bits are always read as 0. The write value should always be 0.

chanhvinh.com

Bit	Bit Name	Initial Value	R/W	Description
0	INP_HS_EDGE	0	R/W	Clock Edge Select for Capturing External Input Hsync Signals DV_HSYNC 0: Rising edge 1: Falling edge

Note: INP_FORMAT, INP_PXD_EDGE, INP_VS_EDGE, and INP_HS_EDGE are updated when the INP_EXT_UPDATE bit in INP_UPDATE is 1. INP_SEL is updated when set.

chanhvinh.com

32.2.3 External Input Sync Signal Control Register (INP_EXT_SYNC_CNT)

Bit:	31	30	29	28	27	26	25	24	23	22	21	20	19	18	17	16
	—	—	—	INP_ENDIAN_ON	—	—	—	INP_SWAP_ON	—	—	—	INP_VS_INV	—	—	—	INP_HS_INV
Initial Value:	0	0	0	0	0	0	0	0	0	0	0	0	0	0	0	0
R/W:	R	R	R	R/W	R	R	R	R/W	R	R	R	R/W	R	R	R	R/W

Bit:	15	14	13	12	11	10	9	8	7	6	5	4	3	2	1	0
	—	—	—	—	—	—	—	INP_H_EDGE_SEL	—	—	—	INP_F525_625	—	—	INP_H_POS[1:0]	
Initial Value:	0	0	0	0	0	0	0	0	0	0	0	0	0	0	0	0
R/W:	R	R	R	R	R	R	R	R/W	R	R	R	R/W	R	R	R/W	R/W

Bit	Bit Name	Initial Value	R/W	Description
31 to 29	—	All 0	R	Reserved These bits are always read as 0. The write value should always be 0.
28	INP_ENDIAN_ON	0	R/W	External Input Bit Endian Change On/Off Control 0: Off 1: On
27 to 25	—	All 0	R	Reserved These bits are always read as 0. The write value should always be 0.
24	INP_SWAP_ON	0	R/W	External Input B/R Signal Swap On/Off Control 0: Off 1: On
23 to 21	—	All 0	R	Reserved These bits are always read as 0. The write value should always be 0.
20	INP_VS_INV	0	R/W	External Input Vsync Signal DV_VSYNC Inversion Control 0: Not inverted (positive polarity) 1: Inverted (negative polarity)
19 to 17	—	All 0	R	Reserved These bits are always read as 0. The write value should always be 0.

chanhvinh.com

Bit	Bit Name	Initial Value	R/W	Description
16	INP_HS_INV	0	R/W	External Input Hsync Signal DV_HSYNC Inversion Control 0: Not inverted (positive polarity) 1: Inverted (negative polarity)
15 to 9	—	All 0	R	Reserved These bits are always read as 0. The write value should always be 0.
8	INP_H_EDGE_SEL	0	R/W	Reference Select for External Input BT656 Hsync Signal 0: EAV 1: SAV
7 to 5	—	All 0	R	Reserved These bits are always read as 0. The write value should always be 0.
4	INP_F525_625	0	R/W	Number of Lines for BT656 External Input 0: 525 lines 1: 625 lines
3, 2	—	All 0	R	Reserved These bits are always read as 0. The write value should always be 0.
1, 0	INP_H_POS[1:0]	0	R/W	Y/Cb/Y/Cr Data String Start Timing to Hsync Reference for BT656/601 External Input 0: Cb/Y/Cr/Y 1: Y/Cr/Y/Cb 2: Cr/Y/Cb/Y 3: Y/Cb/Y/Cr

Note: This register is updated when the INP_EXT_UPDATE bit in INP_UPDATE is 1.

chanhvinh.com

32.2.4 Vsync Signal Phase Adjustment Register (INP_VSYNC_PH_ADJ)

Bit:	31	30	29	28	27	26	25	24	23	22	21	20	19	18	17	16
	—	—	—	—	—	—	INP_FH50[9:0]									
Initial Value:	0	0	0	0	0	0	1	1	0	1	0	1	1	0	1	0
R/W:	R	R	R	R	R	R	R/W	R/W	R/W	R/W	R/W	R/W	R/W	R/W	R/W	R/W

Bit:	15	14	13	12	11	10	9	8	7	6	5	4	3	2	1	0
	—	—	—	—	—	—	INP_FH25[9:0]									
Initial Value:	0	0	0	0	0	0	0	1	1	0	1	0	1	1	0	1
R/W:	R	R	R	R	R	R	R/W	R/W	R/W	R/W	R/W	R/W	R/W	R/W	R/W	R/W

Bit	Bit Name	Initial Value	R/W	Description
31 to 26	—	All 0	R	Reserved These bits are always read as 0. The write value should always be 0.
25 to 16	INP_FH50 [9:0]	858	R/W	Vsync Signal 1/2fH Phase Timing 1/2 clock cycle of the horizontal cycle should be set.
15 to 10	—	All 0	R	Reserved These bits are always read as 0. The write value should always be 0.
9 to 0	INP_FH25 [9:0]	429	R/W	Vsync Signal 1/4fH Phase Timing 1/4 clock cycle of the horizontal cycle should be set.

Note: The INP_FH50[9:0] bits are updated when the INP_EXT_UPDATE and INP_IMG_UPDATE bits in INP_UPDATE are 1. The IMP_FH25[9:0] bits are updated when the INP_IMG_UPDATE bit is 1.

32.2.5 Sync Signal Delay Adjustment Register (INP_DLY_ADJ)

Bit:	31	30	29	28	27	26	25	24	23	22	21	20	19	18	17	16
	—	—	—	—	—	INP_VS_DLY_L[2:0]			INP_FLD_DLY[7:0]							
Initial Value:	0	0	0	0	0	0	0	0	0	0	0	0	0	0	0	0
R/W:	R	R	R	R	R	R/W	R/W	R/W	R/W	R/W	R/W	R/W	R/W	R/W	R/W	R/W

Bit:	15	14	13	12	11	10	9	8	7	6	5	4	3	2	1	0
	INP_VS_DLY[7:0]								INP_HS_DLY[7:0]							
Initial Value:	0	0	0	0	0	0	0	0	0	0	0	0	0	0	0	0
R/W:	R/W	R/W	R/W	R/W	R/W	R/W	R/W	R/W	R/W	R/W	R/W	R/W	R/W	R/W	R/W	R/W

chanhvinh.com

Bit	Bit Name	Initial Value	R/W	Description
31 to 27	—	All 0	R	Reserved These bits are always read as 0. The write value should always be 0.
26 to 24	INP_VS_DLY_L[2:0]	0	R/W	Number of lines for Delaying Vsync signal and Field Differentiation Signal Delay amount: 0 to 7 (lines)
23 to 16	INP_FLD_DLY[7:0]	0	R/W	Field Differentiation Signal Delay Amount Delay amount: 0 to 254 (clock cycles)
15 to 8	INP_VS_DLY[7:0]	0	R/W	Vsync Signal Delay Amount Delay amount: 0 to 254 (clock cycles)
7 to 0	INP_HS_DLY[7:0]	0	R/W	Hsync Signal Delay Amount Delay amount: 0 to 254 (clock cycles)

Note: This register is updated when the INP_IMG_UPDATE bit in INP_UPDATE is 1.

chanhvinh.com

32.2.6 Image Quality Adjustment Block Register Update Control Register (IMGCNT_UPDATE)

Bit:	31	30	29	28	27	26	25	24	23	22	21	20	19	18	17	16
	—	—	—	—	—	—	—	—	—	—	—	—	—	—	—	—
Initial Value:	0	0	0	0	0	0	0	0	0	0	0	0	0	0	0	0
R/W:	R	R	R	R	R	R	R	R	R	R	R	R	R	R	R	R

Bit:	15	14	13	12	11	10	9	8	7	6	5	4	3	2	1	0
	—	—	—	—	—	—	—	—	—	—	—	—	—	—	—	IMGCNT_VEN
Initial Value:	0	0	0	0	0	0	0	0	0	0	0	0	0	0	0	0
R/W:	R	R	R	R	R	R	R	R	R	R	R	R	R	R	R	R/WC1

Bit	Bit Name	Initial Value	R/W	Description
31 to 1	—	All 0	R	Reserved These bits are always read as 0. The write value should always be 0.
0	IMGCNT_VEN	0	R/WC1	Image Quality Adjustment Block Register Update 0: Registers are not updated. 1: Registers are updated at the rising edge of the Vsync signal.

chanhvinh.com

32.2.7 NR Control Register 0 (IMGCNT_NR_CNT0)

Bit:	31	30	29	28	27	26	25	24	23	22	21	20	19	18	17	16
	—	—	—	—	—	—	—	—	—	—	—	NR1D_MD	—	—	—	NR1D_ON
Initial Value:	0	0	0	0	0	0	0	0	0	0	0	1	0	0	0	0
R/W:	R	R	R	R	R	R	R	R	R	R	R	R/W	R	R	R	R/W

Bit:	15	14	13	12	11	10	9	8	7	6	5	4	3	2	1	0
	—	NR1D_Y_TH[6:0]							—	—	NR1D_Y_TAP[1:0]		—	—	NR1D_Y_GAIN[1:0]	
Initial Value:	0	0	0	0	1	0	0	0	0	0	0	0	0	0	1	1
R/W:	R	R/W	R/W	R/W	R/W	R/W	R/W	R/W	R	R	R/W	R/W	R	R	R/W	R/W

Bit	Bit Name	Initial Value	R/W	Description
31 to 21	—	All 0	R	Reserved These bits are always read as 0. The write value should always be 0.
20	NR1D_MD	1	R/W	Horizontal Noise Reduction Operating Mode 0: G/B/R mode 1: Y/Cb/Cr mode
19 to 17	—	All 0	R	Reserved These bits are always read as 0. The write value should always be 0.
16	NR1D_ON	0	R/W	Noise Reduction On/Off Control 0: Noise reduction Off 1: Noise reduction On
15	—	0	R	Reserved This bit is always read as 0. The write value should always be 0.
14 to 8	NR1D_Y_TH[6:0]	8	R/W	Maximum Value (Absolute Value) of Y/G Signal Coring Coring is implemented when detected noise amount value ≤ NR1D_Y_TH. Unsigned: 0 to 127 [LSB]
7, 6	—	All 0	R	Reserved These bits are always read as 0. The write value should always be 0.

chanhvinh.com

Bit	Bit Name	Initial Value	R/W	Description
5, 4	NR1D_Y_TAP[1:0]	0	R/W	Y/G Signal TAP Select 0: Adjacent pixel 1: 2 adjacent pixels 2: 3 adjacent pixels 3: 4 adjacent pixels
3, 2	—	All 0	R	Reserved These bits are always read as 0. The write value should always be 0.
1, 0	NR1D_Y_GAIN[1:0]	3	R/W	Noise Reduction Gain Adjustment of Y/G Signal 0: 1/2 1: 1/4 2: 1/8 3: 1/16

Note: This register is updated when the IMGCNT_VEN bit in IMGCNT_UPDATE is 1.

chanhvinh.com

32.2.8 NR Control Register 1 (IMGCNT_NR_CNT1)

Bit:	31	30	29	28	27	26	25	24	23	22	21	20	19	18	17	16
	—	NR1D_CB_TH[6:0]							—	—	NR1D_CB_TAP[1:0]		—	—	NR1D_CB_GAIN[1:0]	
Initial Value:	0	0	0	0	1	0	0	0	0	0	0	0	0	0	1	1
R/W:	R	R/W	R/W	R/W	R/W	R/W	R/W	R/W	R	R	R/W	R/W	R	R	R/W	R/W

Bit:	15	14	13	12	11	10	9	8	7	6	5	4	3	2	1	0
	—	NR1D_CR_TH[6:0]							—	—	NR1D_CR_TAP[1:0]		—	—	NR1D_CR_GAIN[1:0]	
Initial Value:	0	0	0	0	1	0	0	0	0	0	0	0	0	0	1	1
R/W:	R	R/W	R/W	R/W	R/W	R/W	R/W	R/W	R	R	R/W	R/W	R	R	R/W	R/W

Bit	Bit Name	Initial Value	R/W	Description
31	—	0	R	Reserved This bit is always read as 0. The write value should always be 0.
30 to 24	NR1D_CB_TH[6:0]	8	R/W	Maximum Value (Absolute Value) of Cb/B Signal Coring Coring is implemented when detected noise amount value ≤ NR1D_CB_TH. Unsigned: 0 to 127 [LSB]
23, 22	—	All 0	R	Reserved These bits are always read as 0. The write value should always be 0.
21, 20	NR1D_CB_TAP[1:0]	0	R/W	Cb/B Signal TAP Select 0: Adjacent pixel 1: 2 adjacent pixels 2: 3 adjacent pixels 3: 4 adjacent pixels
19, 18	—	All 0	R	Reserved These bits are always read as 0. The write value should always be 0.
17, 16	NR1D_CB_GAIN[1:0]	3	R/W	Noise Reduction Gain Adjustment of Cb/B Signal 0: 1/2 1: 1/4 2: 1/8 3: 1/16

chanhvinh.com

Bit	Bit Name	Initial Value	R/W	Description
15	—	0	R	Reserved This bit is always read as 0. The write value should always be 0.
14 to 8	NR1D_CR_TH[6:0]	8	R/W	Maximum Value (Absolute Value) of Cr/R Signal Coring Coring is implemented when detected noise amount value ≤ NR1D_CR_TH. Unsigned: 0 to 127 [LSB]
7, 6	—	All 0	R	Reserved These bits are always read as 0. The write value should always be 0.
5, 4	NR1D_CR_TAP[1:0]	0	R/W	Cr/R Signal TAP Select 0: Adjacent pixel 1: 2 adjacent pixels 2: 3 adjacent pixels 3: 4 adjacent pixels
3, 2	—	All 0	R	Reserved These bits are always read as 0. The write value should always be 0.
1, 0	NR1D_CR_GAIN[1:0]	3	R/W	Noise Reduction Gain Adjustment of Cr/R Signal 0: 1/2 1: 1/4 2: 1/8 3: 1/16

Note: This register is updated when the IMGCNT_VEN bit in IMGCNT_UPDATE is 1.

chanhvinh.com

32.2.9 Image Quality Adjustment Block Matrix Mode Register (IMGCNT_MTX_MODE)

Bit:	31	30	29	28	27	26	25	24	23	22	21	20	19	18	17	16
	—	—	—	—	—	—	—	—	—	—	—	—	—	—	—	—
Initial Value:	0	0	0	0	0	0	0	0	0	0	0	0	0	0	0	0
R/W:	R	R	R	R	R	R	R	R	R	R	R	R	R	R	R	R

Bit:	15	14	13	12	11	10	9	8	7	6	5	4	3	2	1	0
	—	—	—	—	—	—	—	—	—	—	—	—	—	—	IMGCNT_MTX_MD[1:0]	
Initial Value:	0	0	0	0	0	0	0	0	0	0	0	0	0	0	1	1
R/W:	R	R	R	R	R	R	R	R	R	R	R	R	R	R	R/W	R/W

Bit	Bit Name	Initial Value	R/W	Description
31 to 2	—	All 0	R	Reserved These bits are always read as 0. The write value should always be 0.
1, 0	IMGCNT_MTX_MD[1:0]	3	R/W	Operating Mode 0: GBR → GBR 1: GBR → YCbCr 2: YCbCr → GBR 3: YCbCr → YCbCr

Note: This register is updated when the IMGCNT_VEN bit in IMGCNT_UPDATE is 1.

chanhvinh.com

32.2.10 Image Quality Adjustment Block Matrix YG Adjustment Register 0 (IMGCNT_MTX_YG_ADJ0)

Bit:	31	30	29	28	27	26	25	24	23	22	21	20	19	18	17	16
	—	—	—	—	—	—	—	—	IMGCNT_MTX_YG[7:0]							
Initial Value:	0	0	0	0	0	0	0	0	1	0	0	0	0	0	0	0
R/W:	R	R	R	R	R	R	R	R	R/W	R/W	R/W	R/W	R/W	R/W	R/W	R/W

Bit:	15	14	13	12	11	10	9	8	7	6	5	4	3	2	1	0
	—	—	—	—	—	IMGCNT_MTX_GG[10:0]										
Initial Value:	0	0	0	0	0	0	0	1	0	0	0	0	0	0	0	0
R/W:	R	R	R	R	R	R/W	R/W	R/W	R/W	R/W	R/W	R/W	R/W	R/W	R/W	R/W

Bit	Bit Name	Initial Value	R/W	Description
31 to 24	—	All 0	R	Reserved These bits are always read as 0. The write value should always be 0.
23 to 16	IMGCNT_MTX_YG [7:0]	128	R/W	Offset (DC) Adjustment of Y/G Signal Unsigned (0 (-128) to 128 (0) to 255 (+127) [LSB])
15 to 11	—	All 0	R	Reserved These bits are always read as 0. The write value should always be 0.
10 to 0	IMGCNT_MTX_GG [10:0]	256	R/W	Y/G Signal Gain Adjustment for Y/G Signal Output Signed (two's complement) (-1024 to +1023 [LSB], 256 [LSB] = 1.0 [times])

Note: This register is updated when the IMGCNT_VEN bit in IMGCNT_UPDATE is 1.

chanhvinh.com

32.2.11 Image Quality Adjustment Block Matrix YG Adjustment Register 1 (IMGCNT_MTX_YG_ADJ1)

Bit:	31	30	29	28	27	26	25	24	23	22	21	20	19	18	17	16
	—	—	—	—	—	IMGCNT_MTX_GB[10:0]										
Initial Value:	0	0	0	0	0	0	0	0	0	0	0	0	0	0	0	0
R/W:	R	R	R	R	R	R/W	R/W	R/W	R/W	R/W	R/W	R/W	R/W	R/W	R/W	R/W

Bit:	15	14	13	12	11	10	9	8	7	6	5	4	3	2	1	0
	—	—	—	—	—	IMGCNT_MTX_GR[10:0]										
Initial Value:	0	0	0	0	0	0	0	0	0	0	0	0	0	0	0	0
R/W:	R	R	R	R	R	R/W	R/W	R/W	R/W	R/W	R/W	R/W	R/W	R/W	R/W	R/W

Bit	Bit Name	Initial Value	R/W	Description
31 to 27	—	All 0	R	Reserved These bits are always read as 0. The write value should always be 0.
26 to 16	IMGCNT_MTX_GB[10:0]	0	R/W	Cb/B Signal Gain Adjustment for Y/G Signal Output Signed (two's complement) (-1024 to +1023 [LSB], 256 [LSB] = 1.0 [times])
15 to 11	—	All 0	R	Reserved These bits are always read as 0. The write value should always be 0.
10 to 0	IMGCNT_MTX_GR[10:0]	0	R/W	Cr/R Signal Gain Adjustment for Y/G Signal Output Signed (two's complement) (-1024 to +1023 [LSB], 256 [LSB] = 1.0 [times])

Note: This register is updated when the IMGCNT_VEN bit in IMGCNT_UPDATE is 1.

chanhvinh.com

32.2.12 Image Quality Adjustment Block Matrix CBB Adjustment Register 0 (IMGCNT_MTX_CBB_ADJ0)

Bit:	31	30	29	28	27	26	25	24	23	22	21	20	19	18	17	16
	—	—	—	—	—	—	—	—	IMGCNT_MTX_B[7:0]							
Initial Value:	0	0	0	0	0	0	0	0	1	0	0	0	0	0	0	0
R/W:	R	R	R	R	R	R	R	R	R/W	R/W	R/W	R/W	R/W	R/W	R/W	R/W

Bit:	15	14	13	12	11	10	9	8	7	6	5	4	3	2	1	0
	—	—	—	—	—	IMGCNT_MTX_BG[10:0]										
Initial Value:	0	0	0	0	0	0	0	0	0	0	0	0	0	0	0	0
R/W:	R	R	R	R	R	R/W	R/W	R/W	R/W	R/W	R/W	R/W	R/W	R/W	R/W	R/W

Bit	Bit Name	Initial Value	R/W	Description
31 to 24	—	All 0	R	Reserved These bits are always read as 0. The write value should always be 0.
23 to 16	IMGCNT_ MTX_B[7:0]	128	R/W	Offset (DC) Adjustment of Cb/B Signal Unsigned (0 (-128) to 128 (0) to 255 (+127) [LSB])
15 to 11	—	All 0	R	Reserved These bits are always read as 0. The write value should always be 0.
10 to 0	IMGCNT_ MTX_BG [10:0]	0	R/W	Y/G Signal Gain Adjustment for Cb/B Signal Output Signed (two's complement) (-1024 to +1023 [LSB], 256 [LSB] = 1.0 [times])

Note: This register is updated when the IMGCNT_VEN bit in IMGCNT_UPDATE is 1.

chanhvinh.com

32.2.13 Image Quality Adjustment Block Matrix CBB Adjustment Register 1 (IMGCNT_MTX_CBB_ADJ1)

Bit:	31	30	29	28	27	26	25	24	23	22	21	20	19	18	17	16
	—	—	—	—	—	IMGCNT_MTX_BB[10:0]										
Initial Value:	0	0	0	0	0	0	0	1	0	0	0	0	0	0	0	0
R/W:	R	R	R	R	R	R/W	R/W	R/W	R/W	R/W	R/W	R/W	R/W	R/W	R/W	R/W

Bit:	15	14	13	12	11	10	9	8	7	6	5	4	3	2	1	0
	—	—	—	—	—	IMGCNT_MTX_BR[10:0]										
Initial Value:	0	0	0	0	0	0	0	0	0	0	0	0	0	0	0	0
R/W:	R	R	R	R	R	R/W	R/W	R/W	R/W	R/W	R/W	R/W	R/W	R/W	R/W	R/W

Bit	Bit Name	Initial Value	R/W	Description
31 to 27	—	All 0	R	Reserved These bits are always read as 0. The write value should always be 0.
26 to 16	IMGCNT_MTX_BB[10:0]	256	R/W	Cb/B Signal Gain Adjustment for Cb/B Signal Output Signed (two's complement) (-1024 to +1023 [LSB], 256 [LSB] = 1.0 [times])
15 to 11	—	All 0	R	Reserved These bits are always read as 0. The write value should always be 0.
10 to 0	IMGCNT_MTX_BR[10:0]	0	R/W	Cr/R Signal Gain Adjustment for Cb/B Signal Output Signed (two's complement) (-1024 to +1023 [LSB], 256 [LSB] = 1.0 [times])

Note: This register is updated when the IMGCNT_VEN bit in IMGCNT_UPDATE is 1.

chanhvinh.com

32.2.14 Image Quality Adjustment Block Matrix CRR Adjustment Register 0 (IMGCNT_MTX_CRR_ADJ0)

Bit:	31	30	29	28	27	26	25	24	23	22	21	20	19	18	17	16
	—	—	—	—	—	—	—	—	IMGCNT_MTX_R[7:0]							
Initial Value:	0	0	0	0	0	0	0	0	1	0	0	0	0	0	0	0
R/W:	R	R	R	R	R	R	R	R	R/W	R/W	R/W	R/W	R/W	R/W	R/W	R/W

Bit:	15	14	13	12	11	10	9	8	7	6	5	4	3	2	1	0
	—	—	—	—	—	IMGCNT_MTX_RG[10:0]										
Initial Value:	0	0	0	0	0	0	0	0	0	0	0	0	0	0	0	0
R/W:	R	R	R	R	R	R/W	R/W	R/W	R/W	R/W	R/W	R/W	R/W	R/W	R/W	R/W

Bit	Bit Name	Initial Value	R/W	Description
31 to 24	—	All 0	R	Reserved These bits are always read as 0. The write value should always be 0.
23 to 16	IMGCNT_MTX_R[7:0]	128	R/W	Offset (DC) Adjustment of Cr/R Signal Unsigned (0 (-128) to 128 (0) to 255 (+127) [LSB])
15 to 11	—	All 0	R	Reserved These bits are always read as 0. The write value should always be 0.
10 to 0	IMGCNT_MTX_RG[10:0]	0	R/W	Y/G Signal Gain Adjustment for Cr/R Signal Output Signed (two's complement) (-1024 to +1023 [LSB], 256 [LSB] = 1.0 [times])

Note: This register is updated when the IMGCNT_VEN bit in IMGCNT_UPDATE is 1.

chanhvinh.com

32.2.15 Image Quality Adjustment Block Matrix CRR Adjustment Register 1 (IMGCNT_MTX_CRR_ADJ1)

Bit:	31	30	29	28	27	26	25	24	23	22	21	20	19	18	17	16
	—	—	—	—	—	IMGCNT_MTX_RB[10:0]										
Initial Value:	0	0	0	0	0	0	0	0	0	0	0	0	0	0	0	0
R/W:	R	R	R	R	R	R/W	R/W	R/W	R/W	R/W	R/W	R/W	R/W	R/W	R/W	R/W

Bit:	15	14	13	12	11	10	9	8	7	6	5	4	3	2	1	0
	—	—	—	—	—	IMGCNT_MTX_RR[10:0]										
Initial Value:	0	0	0	0	0	0	0	1	0	0	0	0	0	0	0	0
R/W:	R	R	R	R	R	R/W	R/W	R/W	R/W	R/W	R/W	R/W	R/W	R/W	R/W	R/W

Bit	Bit Name	Initial Value	R/W	Description
31 to 27	—	All 0	R	Reserved These bits are always read as 0. The write value should always be 0.
26 to 16	IMGCNT_MTX_RB[10:0]	0	R/W	Cb/B Signal Gain Adjustment for Cr/R Signal Output Signed (two's complement) (-1024 to +1023 [LSB], 256 [LSB] = 1.0 [times])
15 to 11	—	All 0	R	Reserved These bits are always read as 0. The write value should always be 0.
10 to 0	IMGCNT_MTX_RR[10:0]	256	R/W	Cr/R Signal Gain Adjustment for Cr/R Signal Output Signed (two's complement) (-1024 to +1023 [LSB], 256 [LSB] = 1.0 [times])

Note: This register is updated when the IMGCNT_VEN bit in IMGCNT_UPDATE is 1.

chanhvinh.com

32.3 Usage Methods

32.3.1 Input Format Adjustment Method

Setting examples of each input format are shown below.

Table 32.26 Video Decoder (NTSC) Input Setting Example

Register Name	Bit Name	Description	Setting Value
INP_SEL_CNT	INP_SEL	Selects the input signal.	0
INP_SEL_CNT	INP_FORMAT[2:0]	Selects the externally input format.	Control not necessary
INP_SEL_CNT	INP_PXD_EDGE	Selects the clock edge for capturing the externally input video signals.	Control not necessary
INP_SEL_CNT	INP_VS_EDGE	Selects the clock edge for capturing the externally input Vsync signals.	Control not necessary
INP_SEL_CNT	INP_HS_EDGE	Selects the clock edge for capturing the externally input Hsync signals.	Control not necessary
INP_EXT_SYNC_CNT	INP_ENDIAN_ON	Changes the bit endian of the external input.	Control not necessary
INP_EXT_SYNC_CNT	INP_SWAP_ON	Enables or disables the B/R signal swap of the external input.	Control not necessary
INP_EXT_SYNC_CNT	INP_HS_INV	Enables or disables the Hsync signal inversion of the external input.	Control not necessary
INP_EXT_SYNC_CNT	INP_VS_INV	Enables or disables the Hsync signal inversion of the external input.	Control not necessary
INP_EXT_SYNC_CNT	INP_H_EDGE_SEL	Selects the Hsync reference for BT656 input.	Control not necessary
INP_EXT_SYNC_CNT	INP_F525_625	Sets the number of lines for BT656 input.	Control not necessary
INP_EXT_SYNC_CNT	INP_H_POS[1:0]	Sets the data start timing with respect to the Hsync in the BT656/601 format.	Control not necessary
INP_VSYNC_PH_ADJ	INP_FH50[9:0]	Sets the 1/2fH phase in clock cycle units.	858
INP_VSYNC_PH_ADJ	INP_FH25[9:0]	Sets the 1/4fH phase in clock cycle units.	429

chanhvinh.com

Register Name	Bit Name	Description	Setting Value
INP_DLY_ADJ	INP_VS_DLY_L[2:0]	Sets the number of lines for delaying the Vsync signal and field differentiation signal.	0
INP_DLY_ADJ	INP_VS_DLY[7:0]	Sets the amount of delay of the Vsync signal in clock cycle units.	0
INP_DLY_ADJ	INP_HS_DLY[7:0]	Sets the amount of delay of the Hsync signal in clock cycle units.	0
INP_DLY_ADJ	INP_FLD_DLY[7:0]	Sets the amount of delay of the field differentiation signal in clock units.	0

Note: Some registers require, after they are set, that the INP_EXT_UPDATE and INP_IMG_UPDATE bits in INP_UPDATE should be set to 1.

Table 32.27 External Input (BT656, 525i) Setting Example

Register Name	Bit Name	Description	Setting Value
INP_SEL_CNT	INP_SEL	Selects the input signal.	1
INP_SEL_CNT	INP_FORMAT[2:0]	Selects the externally input format.	3
INP_SEL_CNT	INP_PXD_EDGE	Selects the clock edge for capturing the externally input video signals.	0
INP_SEL_CNT	INP_VS_EDGE	Selects the clock edge for capturing the externally input Vsync signals.	0
INP_SEL_CNT	INP_HS_EDGE	Selects the clock edge for capturing the externally input Hsync signals.	0
INP_EXT_SYNC_CNT	INP_ENDIAN_ON	Changes the bit endian of the external input.	0
INP_EXT_SYNC_CNT	INP_SWAP_ON	Enables or disables the B/R signal swap of the external input.	0
INP_EXT_SYNC_CNT	INP_HS_INV	Enables or disables the Hsync signal inversion of the external input.	1
INP_EXT_SYNC_CNT	INP_VS_INV	Enables or disables the Hsync signal inversion of the external input.	1
INP_EXT_SYNC_CNT	INP_H_EDGE_SEL	Selects the Hsync reference for BT656 input.	0
INP_EXT_SYNC_CNT	INP_F525_625	Sets the number of lines for BT656 input.	0
INP_EXT_SYNC_CNT	INP_H_POS[1:0]	Sets the data start timing with respect to the Hsync in the BT656/601 format.	0

chanhvinh.com

Register Name	Bit Name	Description	Setting Value
INP_VSYNC_PH_ADJ	INP_FH50[9:0]	Sets the 1/2fH phase in clock cycle units.	858
INP_VSYNC_PH_ADJ	INP_FH25[9:0]	Sets the 1/4fH phase in clock cycle units.	429
INP_DLY_ADJ	INP_VS_DLY_L[2:0]	Sets the number of lines for delaying the Vsync signal and field differentiation signal.	0
INP_DLY_ADJ	INP_VS_DLY[7:0]	Sets the amount of delay of the Vsync signal in clock cycle units.	0
INP_DLY_ADJ	INP_HS_DLY[7:0]	Sets the amount of delay of the Hsync signal in clock cycle units.	0
INP_DLY_ADJ	INP_FLD_DLY[7:0]	Sets the amount of delay of the field differentiation signal in clock units.	0

Note: Some registers require, after they are set, that the INP_EXT_UPDATE and INP_IMG_UPDATE bits in IMP_UPDATE should be set to 1.

chanhvinh.com

Table 32.28 External Input (BT601, 525i) Setting Example

Register Name	Bit Name	Description	Setting Value
INP_SEL_CNT	INP_SEL	Selects the input signal.	1
INP_SEL_CNT	INP_FORMAT[2:0]	Selects the externally input format.	4
INP_SEL_CNT	INP_PXD_EDGE	Selects the clock edge for capturing the externally input video signals.	0
INP_SEL_CNT	INP_VS_EDGE	Selects the clock edge for capturing the externally input Vsync signals.	0
INP_SEL_CNT	INP_HS_EDGE	Selects the clock edge for capturing the externally input Hsync signals.	0
INP_EXT_SYNC_CNT	INP_ENDIAN_ON	Changes the bit endian of the external input.	0
INP_EXT_SYNC_CNT	INP_SWAP_ON	Enables or disables the B/R signal swap of the external input.	0
INP_EXT_SYNC_CNT	INP_HS_INV	Enables or disables the Hsync signal inversion of the external input.	1
INP_EXT_SYNC_CNT	INP_VS_INV	Enables or disables the Hsync signal inversion of the external input.	1
INP_EXT_SYNC_CNT	INP_H_EDGE_SEL	Selects the Hsync reference for BT656 input.	0
INP_EXT_SYNC_CNT	INP_F525_625	Sets the number of lines for BT656 input.	0
INP_EXT_SYNC_CNT	INP_H_POS[1:0]	Sets the data start timing with respect to the Hsync in the BT656/601 format.	0
INP_VSYNC_PH_ADJ	INP_FH50[9:0]	Sets the 1/2fH phase in clock cycle units.	858
INP_VSYNC_PH_ADJ	INP_FH25[9:0]	Sets the 1/4fH phase in clock cycle units.	429
INP_DLY_ADJ	INP_VS_DLY_L[2:0]	Sets the number of lines for delaying the Vsync signal and field differentiation signal.	0
INP_DLY_ADJ	INP_VS_DLY[7:0]	Sets the amount of delay of the Vsync signal in clock cycle units.	0
INP_DLY_ADJ	INP_HS_DLY[7:0]	Sets the amount of delay of the Hsync signal in clock cycle units.	0
INP_DLY_ADJ	INP_FLD_DLY[7:0]	Sets the amount of delay of the field differentiation signal in clock units.	0

Note: Some registers require, after they are set, that the INP_EXT_UPDATE and INP_IMG_UPDATE bits in INT_UPDATE should be set to 1.

chanhvinh.com

32.3.2 Usage Method of Conversion Color Matrix

Typical data conversion setting examples are shown below.

Table 32.29 Conversion Color Matrix

Register Name	Bit Name	GBR to GBR	GBR to YCbCr	YCbCr to GBR	YCbCr to YCbCr
IMGCNT_MTX_MODE	IMGCNT_MTX_MD[1:0]	0	1	2	3
IMGCNT_MTX_YG_ADJ0	IMGCNT_MTX_YG[7:0]	128	128	128	128
IMGCNT_MTX_YG_ADJ0	IMGCNT_MTX_GG[10:0]	256	150	256	256
IMGCNT_MTX_YG_ADJ1	IMGCNT_MTX_GB[10:0]	0	29	1960	0
IMGCNT_MTX_YG_ADJ1	IMGCNT_MTX_GR[10:0]	0	77	1865	0
IMGCNT_MTX_CBB_ADJ0	IMGCNT_MTX_B[7:0]	128	128	128	128
IMGCNT_MTX_CBB_ADJ0	IMGCNT_MTX_BG[10:0]	0	1963	256	0
IMGCNT_MTX_CBB_ADJ1	IMGCNT_MTX_BB[10:0]	256	128	454	256
IMGCNT_MTX_CBB_ADJ1	IMGCNT_MTX_BR[10:0]	0	2005	0	0
IMGCNT_MTX_CRR_ADJ0	IMGCNT_MTX_R[7:0]	128	128	128	128
IMGCNT_MTX_CRR_ADJ0	IMGCNT_MTX_RG[10:0]	0	1941	256	0
IMGCNT_MTX_CRR_ADJ1	IMGCNT_MTX_RB[10:0]	0	2027	0	0
IMGCNT_MTX_CRR_ADJ1	IMGCNT_MTX_RR[10:0]	256	128	359	256

Note: The registers require, after they are set, that the IMGCNT_VEN bit in IMGCNT_UPDATE should be set to 1.

chanhvinh.com

Section 33 Video Display Controller 4 (3): Scaler

33.1 Scaler

33.1.1 Overview of Functions

The scaler subjects the YCbCr and RGB signals output from the input controller, to sync signal generation; and reduction, enlargement, and rotation of the images.

The scaler also records video image in the frame buffer.

In the scaler, either enlargement process or graphics 1 process can be used at a time.

The functional block diagram of the scaler is shown below.

chanhvinh.com

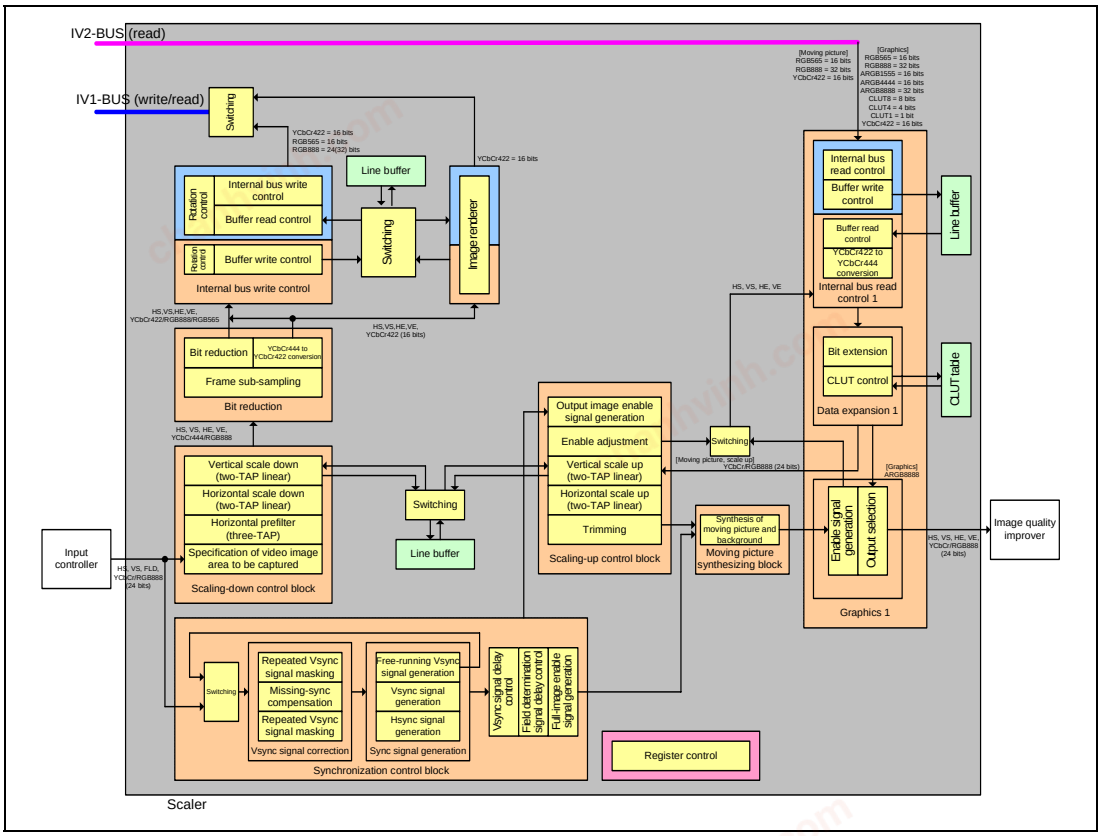

Figure 33.1 Functional Block Diagram of Scaler

33.1.2 Register Control

(1) Updating Registers

The Vsync signal is used to control the update timing of all the registers of the scaling and graphics blocks except some registers of the sync control block.

After 1 is set to the bits in the update control register, the contents of the relevant registers are modified at the rising edge of the Vsync signal. The update control register is automatically cleared to 0 after the modification.

chanhvinh.com

Table 33.1 Register Update Control

Register Name	Bit Name	Initial Value	Description
SCL0_UPDATE	SCL0_UPDATE	0	SYNC Control Register Update 0: Registers are not updated. 1: Registers are updated.
SCL0_UPDATE	SCL0_VEN_D	0	Scaling-Up Control and Frame Buffer Read Control Register Update 0: Registers are not updated. 1: Registers are updated at the rising edge of the Vsync.
SCL0_UPDATE	SCL0_VEN_C	0	Scaling-Down Control and Frame Buffer Read Control Register Update 0: Registers are not updated. 1: Registers are updated at the rising edge of the Vsync.
SCL0_UPDATE	SCL0_VEN_B	0	Synchronization Control and Scaling-up Control Register Update 0: Registers are not updated. 1: Registers are updated at the rising edge of the Vsync.
SCL0_UPDATE	SCL0_VEN_A	0	Scaling-Down Control Register Update 0: Registers are not updated. 1: Registers are updated at the rising edge of the Vsync.
SCL1_UPDATE	SCL1_VEN_B	0	Frame Buffer Write Control Register Update 0: Registers are not updated. 1: Registers are updated at the rising edge of the Vsync.
SCL1_UPDATE	SCL1_VEN_A	0	Frame Buffer Write Control Register Update 0: Registers are not updated. 1: Registers are updated at the rising edge of the Vsync.
GR1_UPDATE	GR1_P_VEN	0	Graphics Display Register Update 0: Registers are not updated. 1: Registers are updated at the rising edge of the Vsync.

chanhvinh.com

Register Name	Bit Name	Initial Value	Description
GR1_UPDATE	GR1_IBUS_VEN	0	Frame Buffer Read Control Register Update 0: Registers are not updated. 1: Registers are updated at the rising edge of the Vsync.

The registers controlled by SCL0_VEN_A, SCL_0_VEN_C, SCL1_VEN_A, and SCL1_VEN_B are modified at the rising edge of the input Vsync signal.

The registers controlled by SCL0_VEN_B, SCL0_VEN_D, GR1_P_VEN, and GR1_IBUS_VEN are modified at the rising edge of the output Vsync signal.

33.1.3 Synchronization Control

(1) Selecting Vsync Signal

The Vsync signal to be output from the scaler can be selected.

When an external input signal is to be displayed, an external input Vsync signal should be selected to be output.

When an external input signal is not provided, a free-running Vsync signal should be selected to be output.

Table 33.2 Vsync Signal Selection Control

Register Name	Bit Name	Initial Value	Description
SCL0_FRC3	RES_VS_SEL	1	Vsync Signal Output Select 0: External input Vsync signal 1: Internally generated free-running Vsync signal

chanhvinh.com

(2) Masking Repeated Vsync Signals

It is possible to prevent receiving the Vsync signal with a period shorter than the standard period. This is achieved by setting the start timing to receive the next Vsync signal after receiving an input Vsync signal.

The Vsync signal reception masking period is set with the RES_VMASK[15:0] bits.

Masking period [usec] = RES_VMASK × 128 ÷ pixel clock frequency [MHz]

This function is enabled or disabled by the RES_VMASK_ON bit.

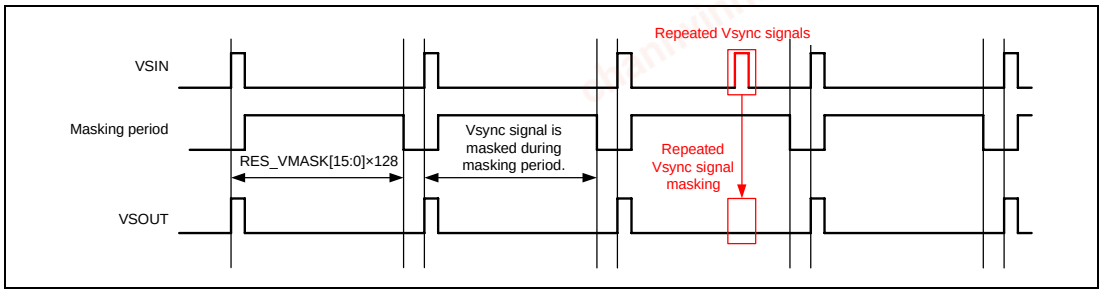

Figure 33.2 Timing for Masking Repeated Vsync Signals

Table 33.3 Repeated Vsync Signal Mask Control

Register Name	Bit Name	Initial Value	Description
SCL0_FRC1	RES_VMASK_ON	1	Repeated Vsync Signal Masking Control 0: Repeated Vsync signal masking control is disabled. 1: Repeated Vsync signal masking control is enabled.
SCL0_FRC1	RES_VMASK[15:0]	2800	Repeated Vsync Signal Masking Period Sets the repeated Vsync signal masking period beginning at a Vsync signal in terms of 128 pixel-clock periods. Masking period [usec] = RES_VMASK × 128 ÷ pixel clock frequency [MHz]

chanhvinh.com

(3) Compensating for Missing Vsync Signals

It is possible to prevent output of the Vsync signal with a period longer than the standard period. This is achieved by setting the wait time after reception of an input Vsync signal until reception of the next Vsync signal.

If no Vsync signals are received during the wait time, an internally generated sync signal is inserted.

The wait time can be set using the RES_VLACK[15:0] bits.

$$\text{Wait time [usec]} = \text{RES_VLACK} \times 128 \div \text{pixel clock frequency [MHz]}$$

This function is enabled or disabled by the RES_VLACK_ON bit.

If no Vsync signals are input during the Vsync signal reception time, the RES_QVLACK bit is set to the high level.

If Vsync signals are continuously detected four or more times during the Vsync signal reception time, the RES_QVLOCK bit is set to the high level.

The RES_QVLOCK bit is valid even when both the RES_VMASK_ON and RES_VLACK_ON bits are set to turn off the corresponding functions.

Note that, however, the RES_VMASK and RES_VLACK bits must be set correctly.

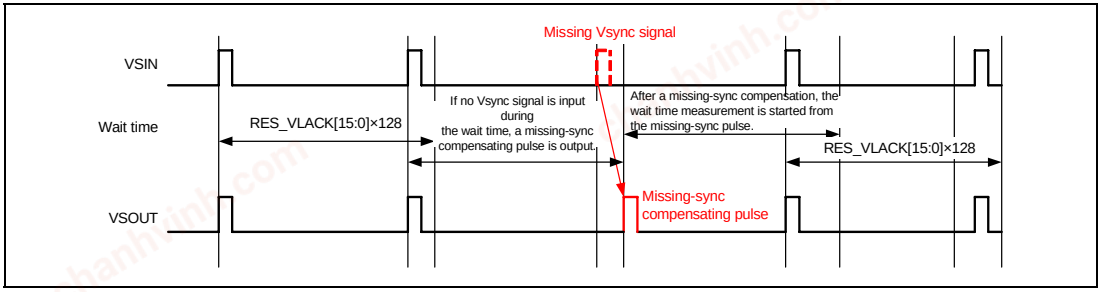

Figure 33.3 Compensation of Missing Vsync Signals

chanhvinh.com

Table 33.4 Missing Vsync Compensation Control

Register Name	Bit Name	Initial Value	Description
SCL0_FRC2	RES_VLACK_ON	1	Missing Vsync Signal Compensation 0: Compensation of missing Vsync signals is disabled. 1: Compensation of missing Vsync signals is enabled.
SCL0_FRC2	RES_VLACK[15:0]	3600	Missing-Sync Compensating Pulse Output Wait Time Sets the wait time before outputting a missing-sync compensating pulse after a Vsync signal. Wait time [usec] = RES_VLACK × 128 ÷ pixel clock frequency [MHz]
SCL0_FRC9	RES_QVLACK	—	Missing Vsync Signal Detection Flag 1: Missing Vsync signal input has been detected. 0: No missing Vsync signal input has been detected.
SCL0_FRC9	RES_QVLOCK	—	Locked Vsync Signal Detection Flag 1: No repeated or missing Vsync signal input has been detected for four or more vertical periods. 0: Repeated or missing Vsync signal input has been detected.

For the Vsync signal, repeated-signal masking is first carried out and then missing-signal compensation is carried out, followed by another repeated-signal masking.

Repetition masking is inserted after missing-Vsync compensation to prevent output of the Vsync signal even in cases such as the input of a Vsync signal immediately after the input of a pulse to compensate for a missing Vsync signal.

On/off control of the missing-Vsync compensation also applies to the second repeated-Vsync masking; and masking period setting of the first repeated-Vsync masking also applies to the second repeated-Vsync masking.

chanhvinh.com

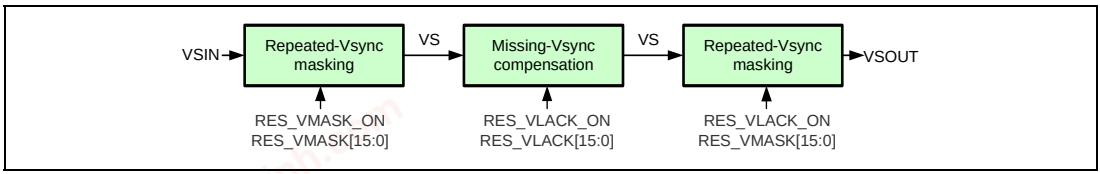

Figure 33.4 Repeated-Vsync Masking and Missing-Vsync Compensation

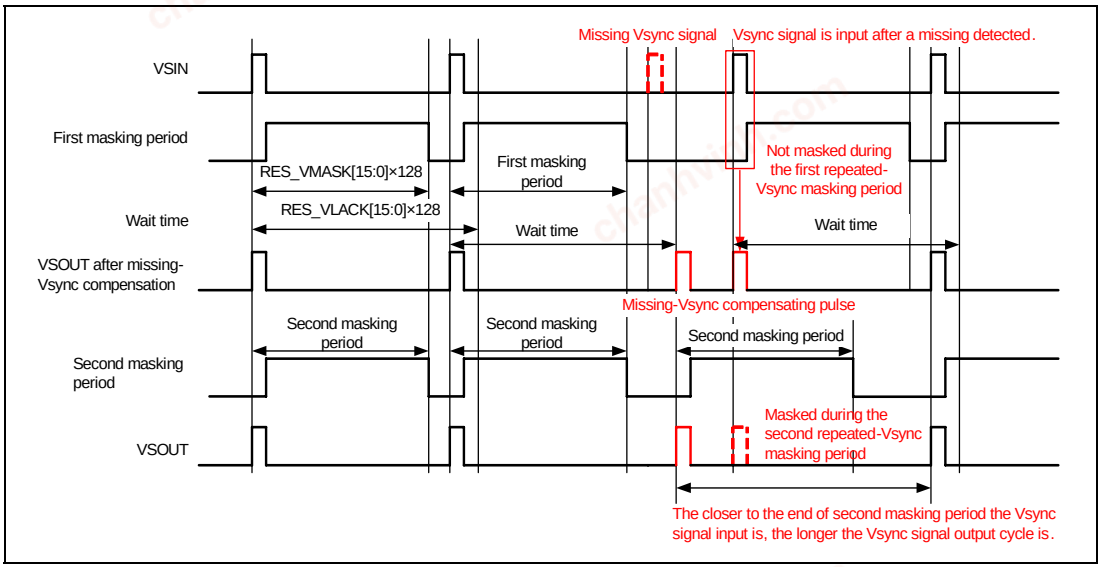

Figure 33.5 Timing for Masking Repeated Vsync Signals and Missing Vsync Signal Compensation

chanhvinh.com

(4) Free-Running Period

Free-running Vsync and Hsync periods can be set.

Hsync period [usec] = (RES_FH + 1) ÷ pixel clock frequency [MHz]

Vsync period [usec] = horizontal period [usec] × (RES_FV + 1)

Table 33.5 Free-Running Period Control

Register Name	Bit Name	Initial Value	Description
SCL0_FRC4	RES_FV[10:0]	524	Free-Running Vsync Period Setting Free-running Vsync period = (RES_FV + 1) × horizontal period [usec]
SCL0_FRC4	RES_FH[10:0]	799	Hsync Period Setting Hsync period [usec] = (RES_FH +1) ÷ pixel clock frequency [MHz]

When selecting an external input Vsync signal, set the RES_VS_SEL bit to 0. At this time, the internally generated free-running Vsync signal is not output.

In the meantime, the Hsync signal is always generated according to the free-running signal setting and output from the scaler.

(5) Vsync Signal Delay Control

Delay of Vsync signal output from the scaler can be controlled.

The delay is used to adjust the frame buffer read timing.

Table 33.6 Vsync Output Delay Control

Register Name	Bit Name	Initial Value	Description
SCL0_FRC5	RES_VSDLY[7:0]	1	Vsync Signal Delay Control Adjusts the Vsync signal delay in the output Hsync period units. Vsync signal delay [usec]: RES_VSDLY × output Hsync period [usec]

chanhvinh.com

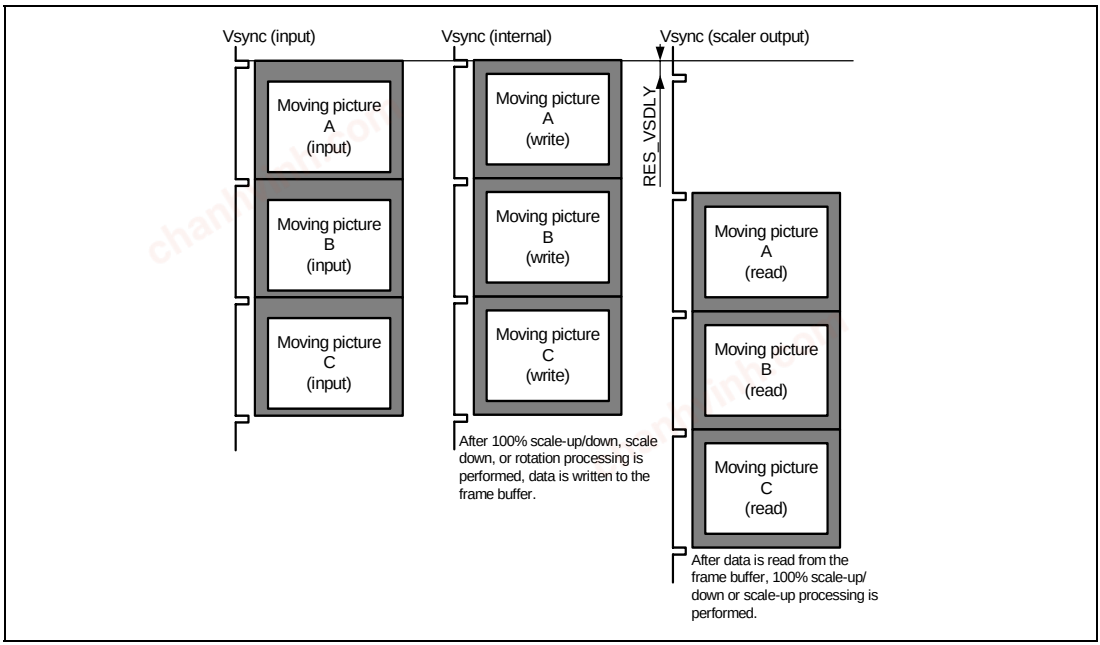

Figure 33.6 Vsync Signal Phases (Two Frame-Buffer Planes Used)

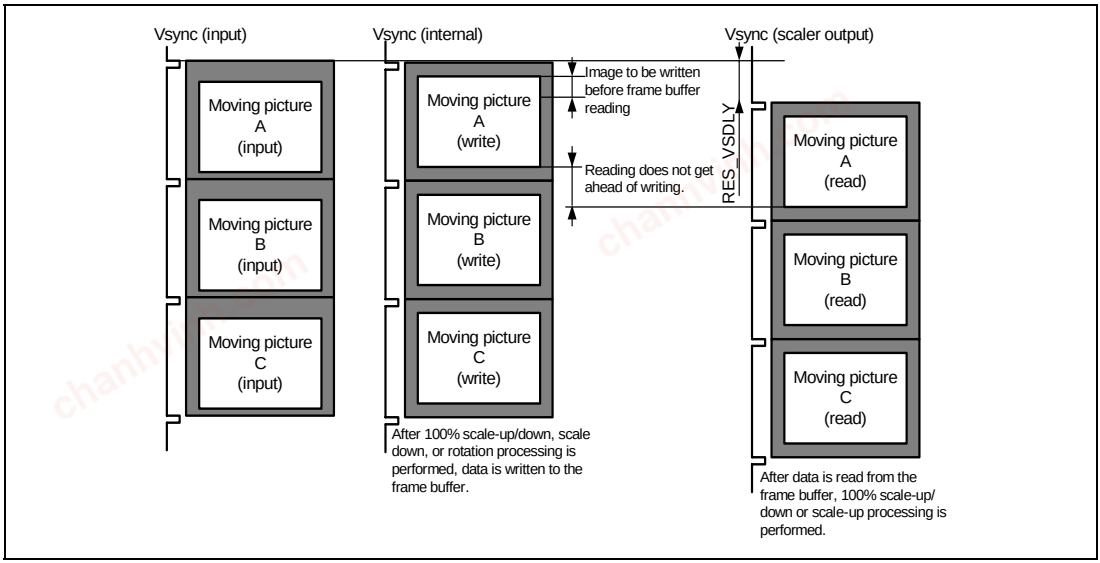

Figure 33.7 Vsync Signal Phases (One Frame-Buffer Plane Used)

chanhvinh.com

33.1.4 Setting Angle of View

(1) Setting Image Area to be Captured

The image area to be captured can be set for reduction or enlargement.

The area is defined by specifying its start position and width based on the input Hsync and Vsync signals.

Table 33.7 Control of Image Area to be Captured

Register Name	Bit Name	Initial Value	Description
SCL0_DS2	RES_VS[10:0]	18	Vertical Position Setting for Video Signal Capturing (VSYNC + V backporch lines) Note: The set value should be four or more (lines). RES_VS + RES_VW should be equal to or less than 2039 (lines).
SCL0_DS2	RES_VW[10:0]	240	Vertical Width of Video Signal to be Captured (lines) Note: RES_VS + RES_VW should be equal to or less than 2039 (lines).
SCL0_DS3	RES_HS[10:0]	244	Horizontal Position Setting for Video Signal Capturing (HSYNC + H backporch video-image clock cycles) Note: The set value should be 16 or more (clock cycles). RES_HS + RES_HW should be equal to or less than 2015 (clock cycles).
SCL0_DS3	RES_HW[10:0]	1440	Horizontal Width of Video Signal to be Captured (video-image clock cycles) Note: RES_HS + RES_HW should be equal to or less than 2015 (clock cycles).

chanhvinh.com

(2) Generating a Full-Screen Enable Signal

The valid period of the full screen to be output from the scaler can be set.

The valid period is defined by specifying its start position and width based on the Hsync and Vsync signals output from the scaler.

Table 33.8 Full-Screen Enable Control

Register Name	Bit Name	Initial Value	Description
SCL0_FRC6	RES_F_VS[10:0]	35	Vertical Enable Signal Start Position for Full Screen. (VSYNC + V backporch lines) Note: The set value should be four or more (lines). RES_F_VS + RES_F_VW should be equal to or less than 2039 (lines).
SCL0_FRC6	RES_F_VW[10:0]	480	Vertical Enable Signal Width for Full Screen (lines) Note: RES_F_VS + RES_F_VW should be equal to or less than 2039 (lines).
SCL0_FRC7	RES_F_HS[10:0]	144	Horizontal Enable Signal Start Position for Full Screen. (HSYNC + H backporch pixel-clock cycles) Note: The set value should be 16 or more (clock cycles). RES_F_HS + RES_F_HW should be equal to or less than 2015 (clock cycles).
SCL0_FRC7	RES_F_HW[10:0]	640	Horizontal Enable Signal Width for Full Screen (pixel-clock cycles) Note: RES_F_HS + RES_F_HW should be equal to or less than 2015 (clock cycles).

chanhvinh.com

(3) Generating an Image Output Enable Signal

The valid period of the image to be output can be set.

The valid period is defined by specifying its start position and width based on the Hsync and Vsync signals output from the scaler.

Table 33.9 Image Output Enable Control

Register Name	Bit Name	Initial Value	Description
SCL0_US2	RES_P_VS[10:0]	35	Vertical Enable Signal Start Position for Output Image. (VSYNC + V backporch lines) Note: The set value should be four or more (lines). RES_P_VS + RES_P_VW should be equal to or less than 2039 (lines).
SCL0_US2	RES_P_VW[10:0]	480	Vertical Enable Signal Width for Output Image (lines) Note: RES_P_VS + RES_P_VW should be equal to or less than 2039 (lines).
SCL0_US3	RES_P_HS[10:0]	144	Horizontal Enable Signal Start Position for Output Image. (HSYNC + H backporch pixel-clock cycles) Note: The set value should be 16 or more (clock cycles). RES_P_HS + RES_P_HW should be equal to or less than 2015 (clock cycles).
SCL0_US3	RES_P_HW[10:0]	640	Horizontal Enable Signal Width for Output Image (pixel-clock cycles) Note: RES_P_HS + RES_P_HW should be equal to or less than 2015 (clock cycles).

chanhvinh.com

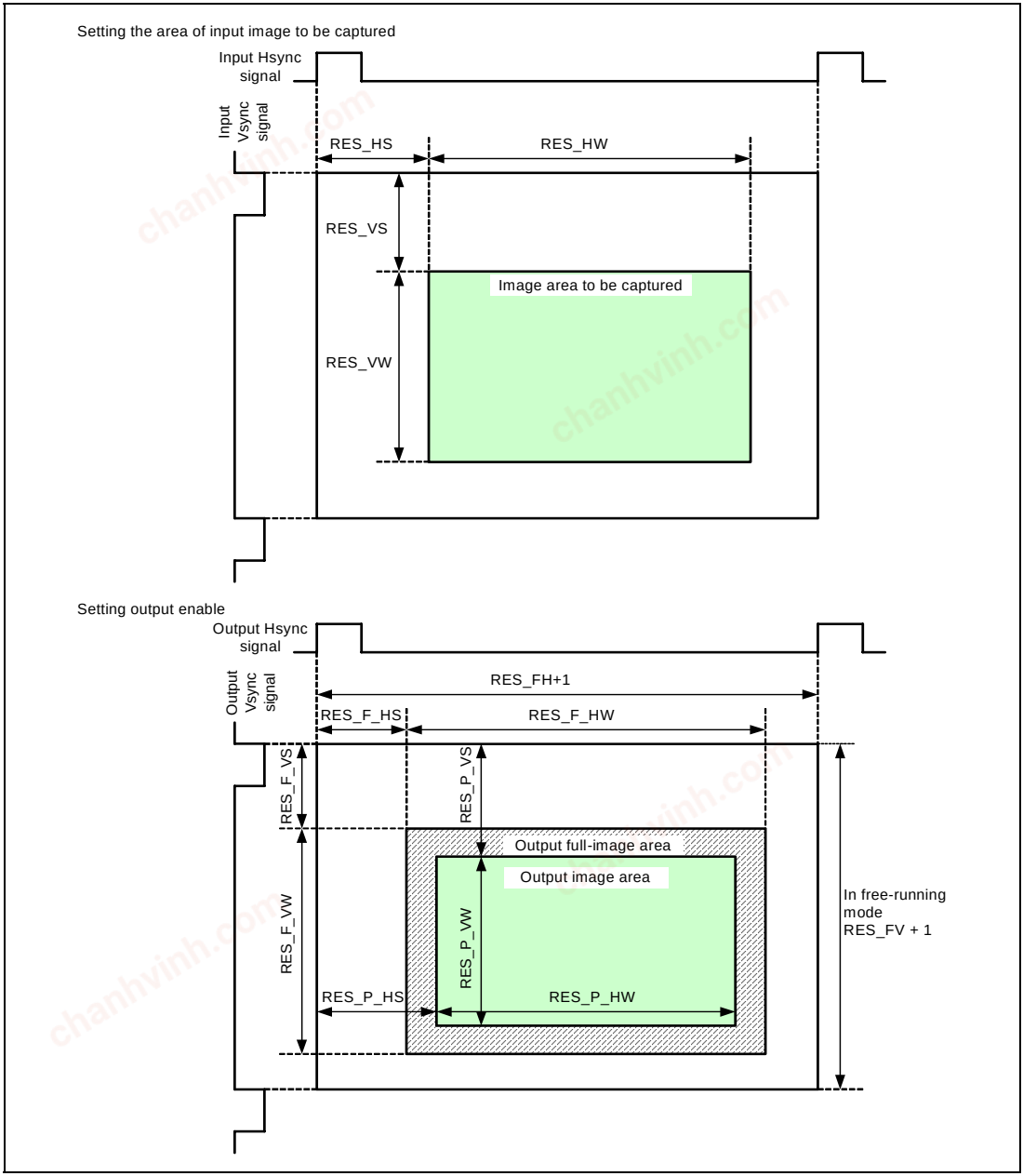

Figure 33.8 Enable Settings

chanhvinh.com

33.1.5 Scaling Settings

(1) Scaling Processing Block

The scaling-down control block scales down the input image from the input controller.

When rotation is required, the scaling-down control block first scales down the image and then rotates it before writing it into the frame buffer.

The scaling-up control block reads the rotated image from the frame buffer and scales it up.

Table 33.10 Rotation and Scaling Process

Rotation	Horizontal Scaling	Vertical Scaling	Scaling-Down Control Block	Scaling-Up Control Block
Normal	Horizontal scale down	Vertical scale down	Horizontal scale down/ vertical scale down	Horizontal 100% scale up/ vertical 100% scale up
	Horizontal scale down	Vertical scale up	Horizontal scale down/ vertical 100% scale up	Horizontal 100% scale up/ vertical scale up
	Horizontal scale up	Vertical scale down	Horizontal 100% scale up/ vertical scale down	Horizontal scale up/ vertical 100% scale up
	Horizontal scale up	Vertical scale up	Horizontal 100% scale up/ vertical 100% scale up	Horizontal scale up/ vertical scale up
Horizontal mirroring	Horizontal scale down	Vertical scale down	Horizontal scale down/ vertical scale down	Horizontal 100% scale up/ vertical 100% scale up
	Horizontal scale down	Vertical scale up	Horizontal scale down/ vertical 100% scale up	Horizontal 100% scale up/ vertical scale-up
	Horizontal scale up	Vertical scale down	Horizontal 100% scale up/ vertical scale down	Horizontal scale up/ vertical 100% scale up
	Horizontal scale up	Vertical scale up	Horizontal 100% scale up/ vertical 100% scale up	Horizontal scale up/ vertical scale up

chanhvinh.com

Rotation	Horizontal Scaling	Vertical Scaling	Scaling-Down Control Block	Scaling-Up Control Block
90° rotation	(Horizontal input → vertical output) scale down	(Vertical input → horizontal output) scale down	Horizontal scale down/ vertical scale down	Horizontal 100% scale up/ vertical 100% scale up
	(Horizontal input → vertical output) scale down	(Vertical input → horizontal output) scale up	Horizontal scale down/ vertical 100% scale up	Horizontal scale up/ vertical 100% scale up
	(Horizontal input → vertical output) scale up	(Vertical input → horizontal output) scale up	Horizontal 100% scale up/ vertical 100% scale up	Horizontal scale up/ vertical scale up
180° rotation	Horizontal scale down	Vertical scale down	Horizontal scale down/ vertical scale down	Horizontal 100% scale up/ vertical 100% scale up
	Horizontal scale down	Vertical scale up	Horizontal scale down/ vertical 100% scale up	Horizontal 100% scale up/ vertical scale up
	Horizontal scale up	Vertical scale down	Horizontal 100% scale up/ vertical scale down	Horizontal scale up/ vertical 100% scale up
	Horizontal scale up	Vertical scale up	Horizontal 100% scale up/ vertical 100% scale up	Horizontal scale up/ vertical scale up
270° rotation	(Horizontal input→vertical output) scale down	(Vertical input→horizontal output) scale down	Horizontal scale down/ vertical scale down	Horizontal 100% scale up/ vertical 100% scale up
	(Horizontal input → vertical output) scale down	(Vertical input → horizontal output) scale up	Horizontal scale down/ vertical 100% scale up	Horizontal scale up/ vertical 100% scale up
	(Horizontal input → vertical output) scale up	(Vertical input → horizontal output) scale up	Horizontal 100% scale up/ vertical 100% scale up	Horizontal scale up/ vertical scale up

chanhvinh.com

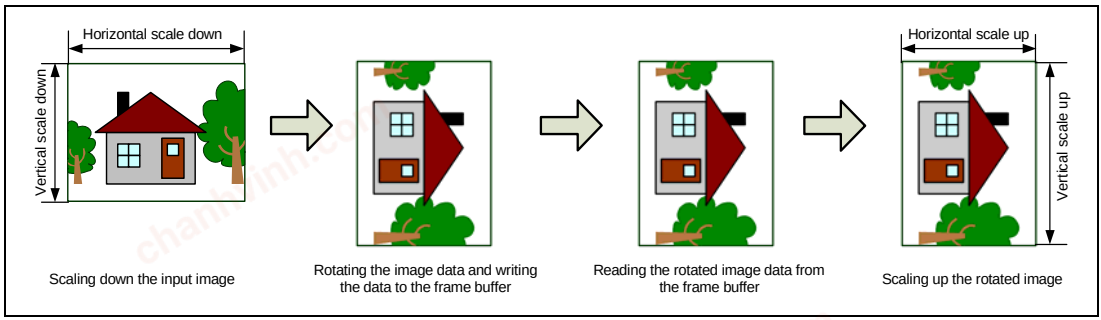

Figure 33.9 Rotation and Scaling Process

It is impossible to use vertical reduction by the scaling-down control block and vertical enlargement by the scaling-up control block simultaneously because they are mutually exclusive. Thus, the following scaling processes cannot be performed with 90° rotation or 270° rotation.

Table 33.11 Impossible Scaling Process

Rotation	Horizontal Scaling	Vertical Scaling	Scaling-Down Control Block	Scaling-Up Control Block
90° rotation 270° rotation	(Horizontal input → vertical output) scale up	(Vertical input → horizontal output) scale down	Horizontal 100% scale up/ vertical scale down	Horizontal 100% scale up/ vertical scale up

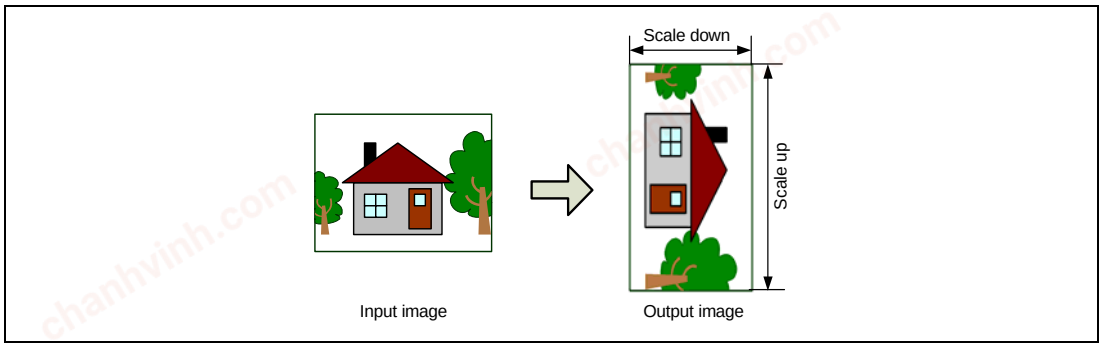

Figure 33.10 Impossible Scaling Process

chanhvinh.com

33.1.6 Horizontal Prefilter

The horizontal prefilter can be turned on or off for brightness (Y) and RGB signals to suppress the frequency band of the signals during horizontal size reduction. The input format depends on the RES_MD[1:0] bit setting in the writing mode register (SCL1_WR1).

When the horizontal reduction ratio is high and there is too much folding frequency component to ignore, the horizontal prefilter should be turned on.

Table 33.12 Horizontal Prefilter Settings

Input Format	RES_PFIL_SEL	Operation
YCbCr input	1	Turns on the horizontal prefilter for Y signal and turns off the horizontal prefilter for Cb/Cr signal.
	0	Turns off the horizontal prefilter.
RGB input	1	Turns on the horizontal prefilter for RGB signal.
	0	Turns off the horizontal prefilter.

Table 33.13 Horizontal Prefilter Control

Register Name	Bit Name	Initial Value	Description
SCL0_DS4	RES_PFIL_SEL	0	Prefilter Mode Select for Brightness Signals 0: The prefilter is turned off. 1: The prefilter is turned on. (1/4 + 1/2 + 1/4)

33.1.7 Horizontal Scale-Down

The number of horizontally arranged pixels can be decreased at a desired ratio in the range of 1/1 to 1/8 using pixel conversion.

For the scaling filter, either hold or linear interpolation mode can be selected.

(1) One-TAP Hold Interpolation

When the interpolation position is between input pixels X_n and X_{n+1}, the $X_{interpo}$ interpolation value is defined as follows.

$$X_{interpo} = X_n$$

chanhvinh.com

(2) Two-TAP Linear Interpolation

When the interpolation position is between input pixels X_n and X_{n+1}, the $X_{interpo}$ interpolation value is defined as follows based on the interpolation position "phase".

$$X_{interpo} = (X_n \times (4096 - phase) + X_{n+1} \times phase) / 4096$$

(3) Calculation of Horizontal Scale Down Ratio

The value to be set to the horizontal scale-down ratio RES_DS_H_RATIO can be obtained using the following equation based on the number of input pixels RES_HW and number of output pixels RES_OUT_HW, where the decimals are rounded off.

$$RES_DS_H_RATIO = round\ (RES_HW \div RES_OUT_HW \times 4096)$$

Note that, for 100% horizontal scale-up, the RES_HW and RES_OUT_HW values should be identical and the RES_DS_H_RATIO bits should be set to 4096.

(4) Handling for Lack of Last-Input Pixel

Interpolation is carried out between the second-last-input and last-input pixels to produce the last-output pixel at the right end of a screen. The interpolation position of the last-output pixel may be close to the second-last-input pixel depending on the horizontal scale-down ratio; in this case, it may appear that the last-input pixel is lacking.

The undesirable influence by lack of last-input pixel can be decreased by appropriately adjusting the horizontal scale-down ratio using the following equations.

Pre-adjustment horizontal scale-down ratio RATIO_org should be calculated first to find adjustment value σ, and then scale-down ratio RES_DS_H_RATIO should be determined.

$$RATIO_org = round\ (RES_HW \div RES_OUT_HW \times 4096)$$

$$\sigma = (RATIO_org \times (RES_OUT_HW - 1) - (RES_HW - 1) \times 4096) \div (RES_OUT_HW - 1)$$

$$RES_DS_H_RATIO = roundup\ (RATIO_org - \sigma)$$

chanhvinh.com

Table 33.14 Horizontal Scale Down Control

Register Name	Bit Name	Initial Value	Description
SCL0_DS1	RES_DS_H_ON	1	Horizontal Scale Down On/Off 0: Off 1: On
SCL0_DS7	RES_OUT_HW [10:0]	640	Number of Valid Horizontal Pixels Output by Scaling-down Control Block (Video-image clock cycles)
SCL0_DS4	RES_DS_H_ INTERPOTYP	1	Horizontal Interpolation Mode Select 0: Hold interpolation 1: Linear interpolation
SCL0_DS4	RES_DS_H_RATIO [15:0]	9224	Horizontal Scale Down Ratio ([15:12]: Integer part, [11:0]: Decimal part) round(RES_HW ÷ RES_OUT_HW × 4096) RES_DS_H_RATIO < 4096: Setting prohibited RES_DS_H_RATIO = 4096: 100% scale up RES_DS_H_RATIO > 4096: Scale down

Note: The RES_OUT_HW value should be aligned in 4-pixel units and equal to or smaller than the RES_HW value.

33.1.8 Vertical Scale-Down

The number of lines can be decreased in the vertical direction at a desired ratio in the range of 1/1 to 1/8 using pixel conversion.

For the scaling filter, either hold or linear interpolation mode can be selected.

(1) One-TAP Hold Interpolation

When the interpolation position is between input lines X_n and X_{n+1}, the $X_{interpo}$ interpolation value is defined as follows.

$$X_{interpo} = X_n$$

chanhvinh.com

(2) Two-TAP Linear Interpolation

When the interpolation position is between input lines X_n and X_{n+1}, the $X_{interpo}$ interpolation value is defined as follows based on the interpolation position "phase".

$$X_{interpo} = (X_n \times (4096 - phase) + X_{n+1} \times phase) / 4096$$

(3) Calculation of Vertical Scale Down Ratio

The value to be set to the vertical scale-down ratio RES_V_RATIO can be obtained using the following equation based on the number of input lines RES_VW and number of output lines RES_OUT_VW, where the decimals are rounded off.

$$RES_V_RATIO = round\ (RES_VW \div RES_OUT_VW \times 4096)$$

Note that the RES_VW and RES_OUT_VW values should be identical for vertical enlargement or 100% vertical enlargement.

For 100% vertical enlargement, reduction is carried out assuming RES_V_RATIO as 4096.

(4) Handling for Lack of Last-Input Line

Interpolation is carried out between the second-last-input and last-input lines to produce the last-output line at the lower end of a screen. The interpolation position of the last-output line may be close to the second-last-input line depending on the vertical scale-down ratio; in this case, it may appear that the last-input line is lacking.

The undesirable influence by the lack of last-input line can be decreased by appropriately adjusting the vertical scale-down ratio using the following equations.

Pre-adjustment vertical scale-down ratio RATIO_org should be calculated first to find adjustment value σ, and then scale-down ratio RES_V_RATIO should be determined.

$$RATIO_org = round\ (RES_VW \div RES_OUT_VW \times 4096)$$

$$\sigma = (RATIO_org \times (RES_OUT_VW - 1) - (RES_VW - 1) \times 4096) \div (RES_OUT_VW - 1)$$

$$RES_V_RATIO = round\ (RATIO_org - \sigma)$$

chanhvinh.com

Table 33.15 Vertical Scale Down Control

Register Name	Bit Name	Initial Value	Description
SCL0_DS1	RES_DS_V_ON	1	Vertical Scale Down On/Off 0: Off 1: On
SCL0_DS7	RES_OUT_VW[10:0]	240	Number of Valid Lines in Vertical Direction Output by Scaling-Down Control Block (lines) This bit setting is used for the number of lines to be written to the frame buffer. When SCL1_WR1.GR1_FLM_LOOP is 0 (frame write mode), these bits specify the number of lines for one frame. When GR1_FLM5.GR1_FLM_LOOP is 1 (line write mode), these bits specify the number of lines for writing in a ring configuration.
SCL0_DS5	RES_V_INTERPOTYP	1	Vertical Interpolation Mode Select 0: Hold interpolation 1: Linear interpolation
SCL0_DS6	RES_V_RATIO[15:0]	2044	Vertical Scale UP/Down Ratio ([15:12]: Integer part, [11:0]: Decimal part) For scale down: round(RES_VW ÷ RES_OUT_VW × 4096) For scale up: round(RES_IN_VW ÷ RES_P_VW × 4096) RES_V_RATIO < 4096: Scale up RES_V_RATIO = 4096: 100% scale up RES_V_RATIO > 4096: Scale down

Note: RES_V_RATIO and RES_V_INTERPOTYP are both shared by vertical reduction and vertical enlargement.

It is impossible to use vertical reduction and vertical enlargement simultaneously because they are mutually exclusive.

The RES_OUT_VW value should be aligned in 4-line units and equal to or smaller than the RES_VW value.

chanhvinh.com

33.1.9 Horizontal Scale Up

The number of horizontally arranged pixels can be increased at a desired ratio in the range of 1/1 to 8/1 using pixel conversion.

For the scaling filter, either hold or linear interpolation mode can be selected.

(1) One-TAP Hold Interpolation

When the interpolation position is between input pixels X_n and X_{n+1}, the $X_{interpo}$ interpolation value is defined as follows.

$$X_{interpo} = X_n$$

(2) Two-TAP Linear Interpolation

When the interpolation position is between input pixels X_n and X_{n+1}, the $X_{interpo}$ interpolation value is defined as follows based on the interpolation position "phase".

$$X_{interpo} = (X_n \times (4096 - phase) + X_{n+1} \times phase) / 4096$$

(3) Calculation of Horizontal Scale Up Ratio

The value to be set to the horizontal scale-up ratio RES_US_H_RATIO can be obtained using the following equation based on the number of input pixels RES_IN_HW and number of output pixels RES_P_HW, where the decimals are rounded off.

$$RES_US_H_RATIO = round\ (RES_IN_HW \div RES_P_HW \times 4096)$$

Note that, for 100% horizontal scale-up, the RES_IN_HW and RES_P_HW values should be identical and the RES_US_H_RATIO bits should be set to 4096.

chanhvinh.com

(4) Folding Handling

Since interpolation is carried out between the last-input pixel and second-last-input folding pixel to produce the last-output pixel at the right end of a screen, folding may undesirably stand out depending on the horizontal scale up ratio.

The undesirable influence by folding pixels can be decreased by appropriately adjusting the horizontal scale-up ratio using the following equations.

Pre-adjustment horizontal scale-up ratio RATIO_org should be calculated first to find adjustment value σ, and then scale-up ratio RES_US_H_RATIO should be determined.

$$RATIO_org = round\ (RES_IN_HW \div RES_P_HW \times 4096)$$

$$\sigma = (RATIO_org \times (RES_P_HW - 1) - (RES_IN_HW - 1) \times 4096 \div (RES_P_HW - 1)$$

$$RES_US_H_RATIO = round\ (RATIO_org - \sigma)$$

Table 33.16 Horizontal Scale Up Control

Register Name	Bit Name	Initial Value	Description
SCL0_US1	RES_US_H_ON	1	Horizontal Scale Up On/Off 0: Off 1: On
SCL0_US4	RES_IN_HW[10:0]	640	Number of Valid Horizontal Pixels Input to Scaling-down Control Block (Pixel-clock cycles)
SCL0_US6	RES_US_H_ INTERPOTYP	1	Horizontal Interpolation Mode Select 0: Hold interpolation 1: Linear interpolation
SCL0_US5	RES_US_H_RATIO [15:0]	9224	Horizontal Scale Up Ratio ([15:12]: Integer part, [11:0]: Decimal part) round(RES_IN_HW ÷ RES_P_HW × 4096) RES_US_H_RATIO < 4096: Scale up RES_US_H_RATIO = 4096: 100% scale-up RES_US_H_RATIO > 4096: Setting prohibited

chanhvinh.com

33.1.10 Vertical Scale-Up

The number of lines can be increased in the vertical direction at a desired ratio in the range of 1/1 to 8/1 using pixel conversion.

For the scaling filter, either hold or linear interpolation mode can be selected.

(1) One-TAP Hold Interpolation

When the interpolation position is between input lines X_n and X_{n+1}, the $X_{interpo}$ interpolation value is defined as follows.

$$X_{interpo} = X_n$$

(2) Two-TAP Linear Interpolation

When the interpolation position is between input lines X_n and X_{n+1}, the $X_{interpo}$ interpolation value is defined as follows based on the interpolation position "phase".

$$X_{interpo} = (X_n \times (4096 - phase) + X_{n+1} \times phase) / 4096$$

(3) Calculation of Vertical Scale Up Ratio

The value to be set to the vertical scale-up ratio RES_V_RATIO can be obtained using the following equation based on the number of input lines RES_IN_VW and number of output lines RES_P_VW, where the decimals are rounded off.

$$RES_V_RATIO = round\ (RES_IN_VW \div RES_P_VW \times 4096)$$

Note that, for 100% vertical enlargement or vertical reduction, the RES_IN_VW and RES_P_VW values should be identical.

(4) Folding Handling

The last line to be output at the bottom of the screen is produced by interpolation between the last line and line for folding (second-last line to be input). According to the vertical scale-up rate, this may cause folding to stand out.

The undesirable influence by folding lines can be decreased by appropriately adjusting the vertical scale-up ratio using the following equations.

Pre-adjustment vertical scale-up ratio RATIO_org should be calculated first to find adjustment value σ, and then scale-up ratio RES_V_RATIO should be determined.

chanhvinh.com

RATIO_org = round (RES_IN_VW ÷ RES_P_VW × 4096)

σ = (RATIO_org × (RES_P_VW – 1) – (RES_IN_VW – 1) × 4096) ÷ (RES_P_VW – 1)

RES_V_RATIO = round (RATIO_org – σ)

Table 33.17 Vertical Scale Up Control

Register Name	Bit Name	Initial Value	Description
SCL0_US1	RES_US_V_ON	1	Vertical Scale Up On/Off 0: Off 1: On
SCL0_US4	RES_IN_VW[10:0]	240	Number of Valid Lines in Vertical Direction Input to Scaling-down Control Block (Lines)
SCL0_DS5	RES_V_INTERPOTYP	1	Vertical Interpolation Mode Select 0: Hold interpolation 1: Linear interpolation
SCL0_DS6	RES_V_RATIO[15:0]	2044	Vertical Scale Up Ratio ([15:12]: Integer part, [11:0]: Decimal part) For scale down: round(RES_VW ÷ RES_OUT_VW × 4096) For scale up: round(RES_IN_VW ÷ RES_P_VW × 4096) RES_V_RATIO < 4096: Scale up RES_V_RATIO = 4096: 100% scale up RES_V_RATIO > 4096: Scale down

Note: RES_V_RATIO and RES_V_INTERPOTYP are both shared by vertical reduction and vertical enlargement.
It is impossible to use vertical reduction and vertical enlargement simultaneously because they are mutually exclusive.

chanhvinh.com

33.1.11 IP Conversion

(1) Initial Phase Control

When interlace signals are input, line flickering caused by the line offset between the top and bottom fields can be decreased before being displayed by independently adjusting the initial scaling phases of the fields.

For various operations, appropriate settings should be made referring to the relevant registers as listed in table 33.18.

Table 33.18 Initial Scaling Phase Settings (Standard Values) for IP Conversion

Rotation	Horizontal Scaling	Vertical Scaling	Reference Bit (Setting)
Normal	Horizontal scale down	Vertical scale down	RES_TOP_INIPHASE = 2048
	Horizontal scale down	Vertical scale up	RES_TOP_INIPHASE = 2048
	Horizontal scale up	Vertical scale down	RES_TOP_INIPHASE = 2048
	Horizontal scale up	Vertical scale up	RES_TOP_INIPHASE = 2048
Horizontal mirroring	Horizontal scale down	Vertical scale down	RES_TOP_INIPHASE = 2048
	Horizontal scale down	Vertical scale up	RES_TOP_INIPHASE = 2048
	Horizontal scale up	Vertical scale down	RES_TOP_INIPHASE = 2048
	Horizontal scale up	Vertical scale up	RES_TOP_INIPHASE = 2048
90° rotation	(Horizontal input → vertical output) scale down	(Vertical input → horizontal output) scale down	RES_TOP_INIPHASE = 2048
	(Horizontal input → vertical output) scale down	(Vertical input → horizontal output) scale up	RES_TOP_INIPHASE = 2048
	(Horizontal input → vertical output) scale up	(Vertical input → horizontal output) scale up	RES_US_HB_INIPHASE = 2048

chanhvinh.com

Rotation	Horizontal Scaling	Vertical Scaling	Reference Bit (Setting)
180° rotation	Horizontal scale down	Vertical scale down	RES_TOP_INIPHASE = 2048
	Horizontal scale down	Vertical scale up	RES_BTM_INIPHASE = 2048
	Horizontal scale up	Vertical scale down	RES_TOP_INIPHASE = 2048
	Horizontal scale up	Vertical scale up	RES_BTM_INIPHASE = 2048
270° rotation	(Horizontal input → vertical output) scale down	(Vertical input → horizontal output) scale down	RES_TOP_INIPHASE = 2048
	(Horizontal input → vertical output) scale down	(Vertical input → horizontal output) scale up	RES_TOP_INIPHASE = 2048
	(Horizontal input → vertical output) scale up	(Vertical input → horizontal output) scale up	RES_US_HT_INIPHASE = 2048

Note: Set 0 to the initial phase control registers where the specific value is not shown in the table.
Set 0 to all the initial phase control registers when progressive signals are input.

Table 33.19 Initial Scaling Phase Control

Register Name	Bit Name	Initial Value	Description
SCL0_DS5	RES_BTM_INIPHASE [11:0]	0	Vertical Interpolation Start Phase for Bottom Field 0 to 4095 (0 to approx.1.0)
SCL0_DS5	RES_TOP_INIPHASE [11:0]	2048	Vertical Interpolation Start Phase for Top Field 0 to 4095 (0 to approx.1.0)
SCL0_US6	RES_US_HB_INIPHASE [11:0]	0	Horizontal Interpolation Start Phase for Bottom Field 0 to 4095 (0 to approx.1.0)
SCL0_US6	RES_US_HT_INIPHASE [11:0]	0	Horizontal Interpolation Start Phase for Top Field 0 to 4095 (0 to approx.1.0)

chanhvinh.com

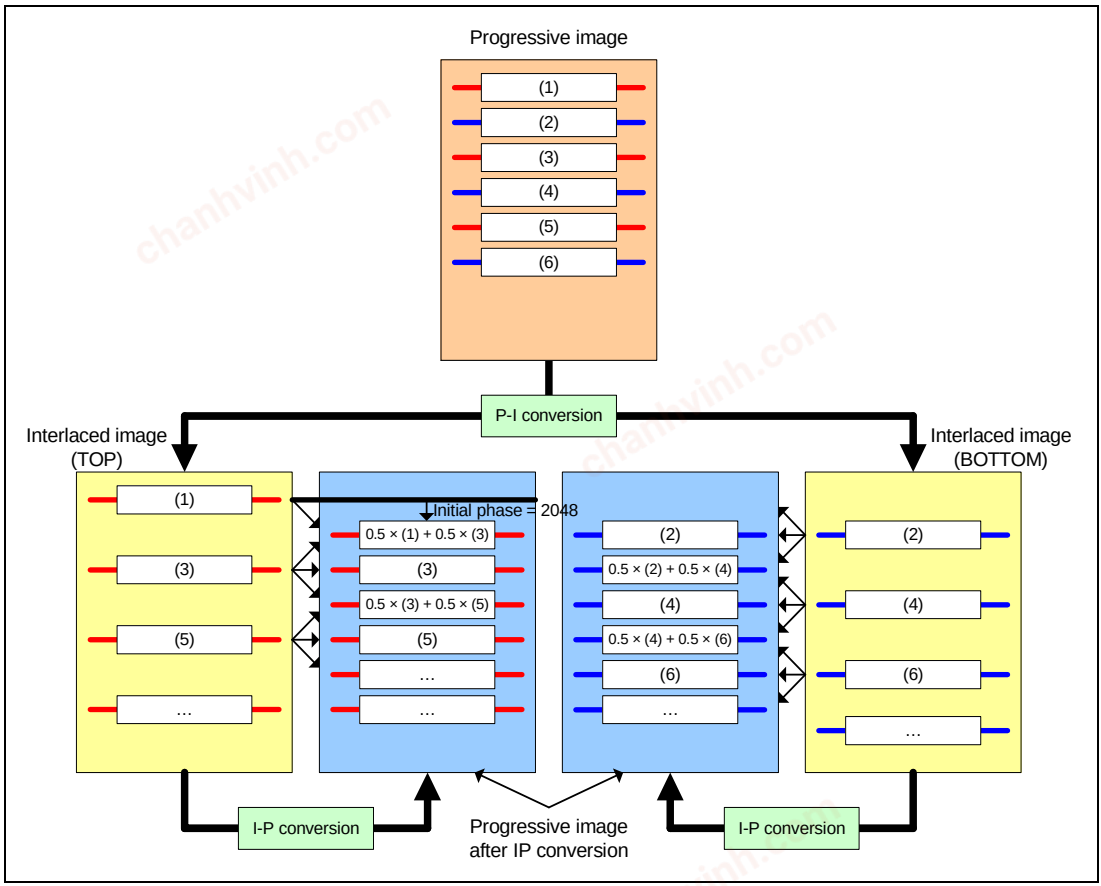

Figure 33.11 IP Conversion Processing Schematic Diagram

chanhvinh.com

(2) Field Determination Signal Control

When interlace signals are input, the field determination signal can be controlled, which is output to the scaling-up control block during vertical scaling.

When progressive signals are input or vertical scaling is carried out by the scaling-down control block, the field determination signal output to the scaling-up control block is fixed to the specific level, and thus either 0 or 1 can be set to the RES_FLD_DLY_SEL bit.

Table 33.20 Settings for Field Determination Signal Control

Input Signal	Rotation	Vertical Processing	Frame Buffer	RES_FLD_DLY_SEL
Progressive	—	—	—	—
Interlace	Normal Horizontal mirroring 180° rotation	Vertical scale down	—	—
		Vertical scale up	One plane or less	0
			Two planes or more	1
	90° rotation	(Horizontal input → vertical output) scale down	—	—
	270° rotation	(Horizontal input → vertical output) scale up	One plane or less	0
			Two planes or more	1

Table 33.21 Field Determination Signal Control

Register Name	Bit Name	Initial Value	Description
SCL0_FRC5	RES_FLD_DLY_SEL	1	Field Determination Signal Delay Control 0: No delay 1: Delay of one vertical cycle

chanhvinh.com

33.1.12 Trimming

The upper, lower, right, and left parts of a post-scaling image can be trimmed off as specified by the RES_VCUT and RES_HCUT bits before being output.

The frame lines of the post-scaling image can also be displayed by setting the RES_DISP_ON bit to 1.

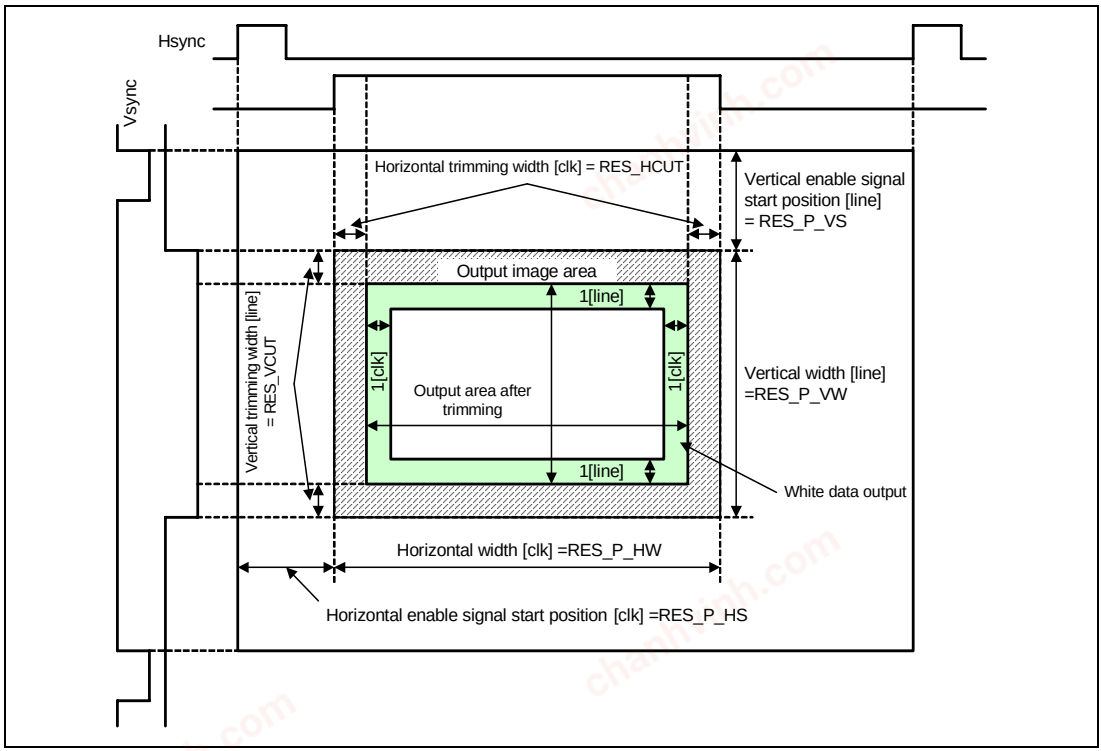

Figure 33.12 Area Relationship for Trimming (Frame Lines Displayed)

chanhvinh.com

Table 33.22 Trimming Control

Register Name	Bit Name	Initial Value	Description
SCL0_US7	RES_HCUT[7:0]	0	Horizontal Amount of Cut-off Post-Scaling Image (Right and Left Parts) Sets the number of pixel-clock cycles.
SCL0_US7	RES_VCUT[7:0]	0	Vertical Amount of Cut-off Post-Scaling Image (Upper and Lower Parts) Sets the number of lines.
SCL0_US8	RES_DISP_ON	0	Post-Scaling Image Frame Display On/Off 0: Frame display on 1: Frame display off

33.1.13 Screen Synthesis

During the valid full-screen period, the image area can be overlayed before being output. If the image area to be output is smaller than a full-screen, the background color specified by the RES_BK_COL_R, RES_BK_COL_G, and RES_BK_COL_B bits are displayed to fill the background.

Table 33.23 Screen Synthesis Control

Register Name	Bit Name	Initial Value	Description
SCL0_OVR1	RES_BK_COL_R[7:0]	128	Background Color Setting R/Cr Signal R: 8 bits; unsigned (0 to 255 [LSB]) Cr: 8 bits; 128 offset binary; unsigned (0 to 255 [LSB])
SCL0_OVR1	RES_BK_COL_B[7:0]	128	Background Color Setting B/Cb Signal B: 8 bits; unsigned (0 to 255 [LSB]) Cb: 8 bits; 128 offset binary; unsigned (0 to 255 [LSB])
SCL0_OVR1	RES_BK_COL_G[7:0]	0	Background Color Setting G/Y Signal G/Y: 8 bits; unsigned (0 to 255 [LSB])

chanhvinh.com

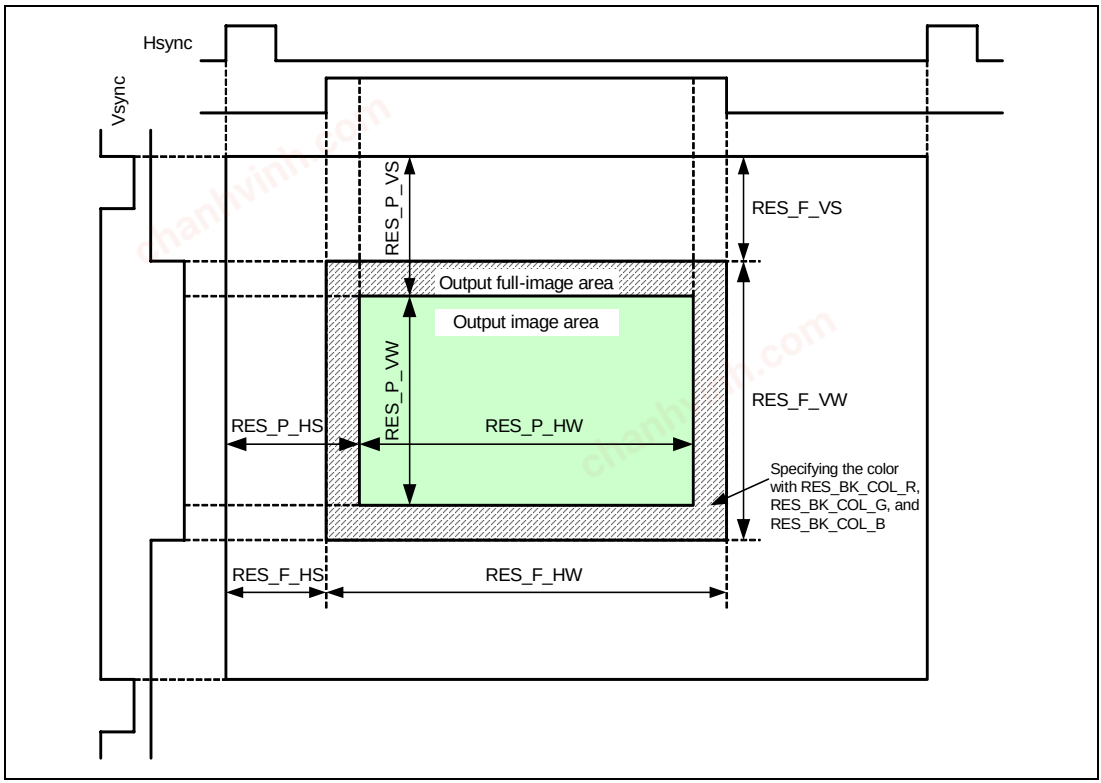

Figure 33.13 Area Relationship with Output Image Size Smaller than a Full Screen

chanhvinh.com

33.1.14 Selecting Format for Writing Video Image Signals to Frame Buffer

A format can be selected for writing video image signals to the frame buffer.

Although 24-bit YCbCr signals or 24-bit RGB signals are input to the scaling control block, they are converted into 16-bit YCbCr422 signals, 16-bit RGB565 signals, or 32-bit RGB888 signals before being written to the frame buffer.

As bit reduction processing of RGB565, rounding off or 2 × 2 pattern dither can be selected with the RES_DTH_ON bit. For details on pattern dither, see section 36.1.7, Dither Process in section 36, Video Display Controller 4 (6): Output Controller.

Input YCbCr signals are converted into YCbCr422 signals and output to the image renderer.

For distortion correction, refer to section 38, Image Renderer (IMR-LS).

Table 33.24 Frame Buffer Writing Mode Setting

RES_BITDEC_ON	RES_MD[1:0]	Writing Mode
0	2	RGB888 (normal, horizontal mirroring)
1	1	RGB565 (normal, horizontal mirroring, rotation)
0	0	YCbCr422 (normal, horizontal mirroring, rotation)
1	0	YCbCr422 (distortion correction)

Table 33.25 Video Signal Writing Format Selection Control

Register Name	Bit Name	Initial Value	Description
SCL1_WR1	RES_MD[1:0]	0	Frame Buffer Video-Signal Writing Format 0: YCbCr422 (16 bits) 1: RGB565 (16 bits) 2: RGB888 (24 (32) bits) 3: Setting prohibited
SCL1_WR6	RES_BITDEC_ON	0	Bit Reduction On/Off 0: Off 1: On
SCL1_WR6	RES_DTH_ON	0	Dither Correction On/Off 0: Off (rounded off) 1: On (2 × 2 pattern dither)

chanhvinh.com

33.1.15 Horizontal Mirroring and Rotation

Horizontal mirroring and rotation can be carried out for scaled-down images before being written to the frame buffer.

Tables 33.26 and 33.27 show the relationship between various writing modes for image processing and video signals.

Table 33.26 Relationship between Writing Modes and Video Signals

RES_DS_WR_MD[2:0]	Writing Modes	YCbCr422	RGB565	RGB888
0	Normal writing	Enabled	Enabled	Enabled
1	Horizontal mirroring	Enabled	Enabled	Enabled
2	90° rotation	Enabled	Enabled	Disabled
3	180° rotation	Enabled	Enabled	Disabled
4	270° rotation	Enabled	Enabled	Disabled
5 to 7	Setting prohibited	—	—	—

Table 33.27 Horizontal Mirroring and Rotation Control

Register Name	Bit Name	Initial Value	Description
SCL1_WR1	RES_DS_WR_MD[2:0]	0	Frame Buffer Writing Mode for Image Processing 0: Normal 1: Horizontal mirroring 2: 90° rotation 3: 180° rotation 4: 270° rotation 5 to 7: Setting prohibited

chanhvinh.com

33.1.16 Writing to Frame Buffer

(1) Frame Buffer Transfer Mode

Either 32-byte or 128-byte transfer mode can be selected for accessing the frame buffer in which video image data and graphics data are stored.

Table 33.28 Frame Buffer Transfer Mode

Register Name	Bit Name	Initial Value	Description
SCL1_WR1	RES_BST_MD	0	Transfer Burst Length for Frame Buffer Writing 0: 32-byte transfer (4 bursts) 1: 128-byte transfer (16 bursts)

(2) Frame Buffer Write Control

Frame buffer writing is enabled or disabled.

Table 33.29 Frame Buffer Writing Control

Register Name	Bit Name	Initial Value	Description
SCL1_WR5	RES_WENB	0	Frame Buffer Write Enable 0: Frame buffer writing is disabled. 1: Frame buffer writing is enabled.

chanhvinh.com

(3) Frame Buffer Writing Rate Selection

A frame buffer writing rate can be selected from among 1/1, 1/2, 1/4, and 1/8 the vertical frequency of the input signal.

When 1/2, 1/4, or 1/8 is selected, either the top or bottom field can be selected for writing.

Table 33.30 Frame Buffer Write Control

Register Name	Bit Name	Initial Value	Description
SCL1_WR5	RES_FS_RATE[1:0]	0	Writing Rate Sets the frame buffer writing rate to the vertical frequency of the input signal. 0: 1/1 an input signal (The RES_FLD_SEL setting is invalid.) 1: 1/2 an input signal 2: 1/4 an input signal 3: 1/8 an input signal
SCL1_WR5	RES_FLD_SEL	0	Write Field Select 0: Top field 1: Bottom field
SCL1_WR5	RES_INTER	1	Field Operating Mode Select 0: Progressive 1: Interlace

(4) Frame Buffer Write Addresses

Frame buffer addresses are specified using the base address, line offset address, frame offset address, data size of a line, and the number of lines in a frame.

The RES_BASE[31:0], RES_LN_OFF[14:0], and RES_FLM_OFF[22:0] bits should be set in 32-byte units (the lower five bits should be fixed to 0).

For 128-byte transfer, bits [6:5] in the address control registers should be fixed to 0 since addresses should be specified in 128-byte units.

For the data size of a line and the number of lines in a frame, the relevant register values set for the scaling-down control block are used.

chanhvinh.com

Table 33.31 Frame Buffer Write Address Control

Register Name	Bit Name	Initial Value	Description
SCL1_WR2	RES_BASE[31:0]	0	Frame Buffer Base Address Sets the start address of the frame buffer where frame data is to be stored. For 32-byte transfer: The lower five bits should be fixed to 0_0000. For 128-byte transfer: The lower seven bits should be fixed to 000_0000.
SCL1_WR3	RES_LN_OFF[14:0]	2048	Frame Buffer Line Offset Address Sets the line offset address for calculating the start address of each line. Line 0: RES_BASE Line 1: RES_BASE + RES_LN_OFF × 1 : Line n: RES_BASE + RES_LN_OFF × n For 32-byte transfer: The lower five bits should be fixed to 0_0000. For 128-byte transfer: The lower seven bits should be fixed to 000_0000.
SCL1_WR4	RES_FLM_OFF[22:0]	524288	Frame Buffer Frame Offset Address Sets the frame offset address for calculating the start address of each frame. Buffer 0: RES_BASE Buffer 1: RES_BASE + RES_FLM_OFF × 1 : Buffer n: RES_BASE + RES_FLM_OFF × n For 32-byte transfer: The lower five bits should be fixed to 0_0000. For 128-byte transfer: The lower seven bits should be fixed to 000_0000.

chanhvinh.com

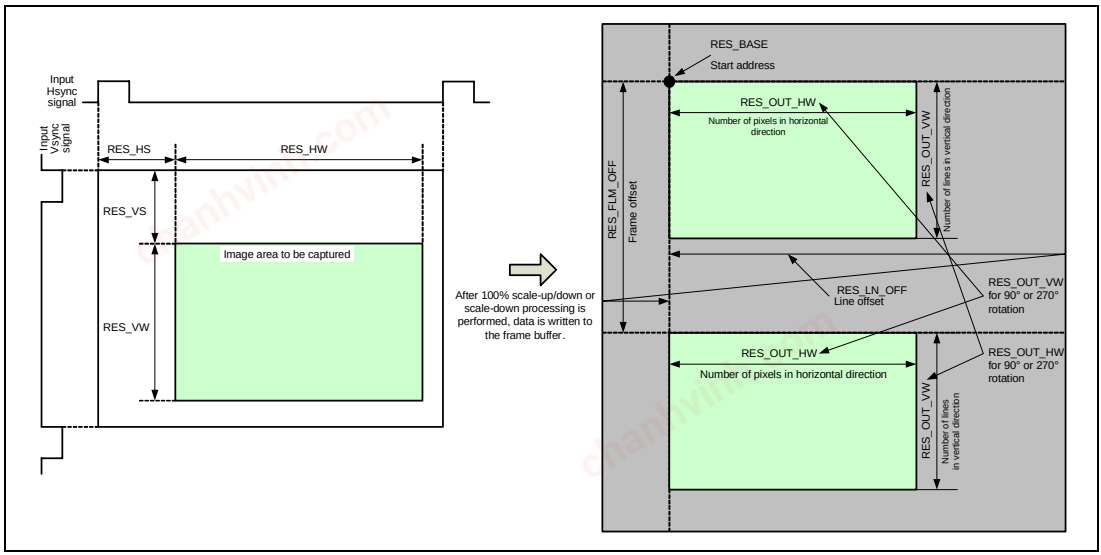

Figure 33.14 Data Arrangement in Frame Buffer

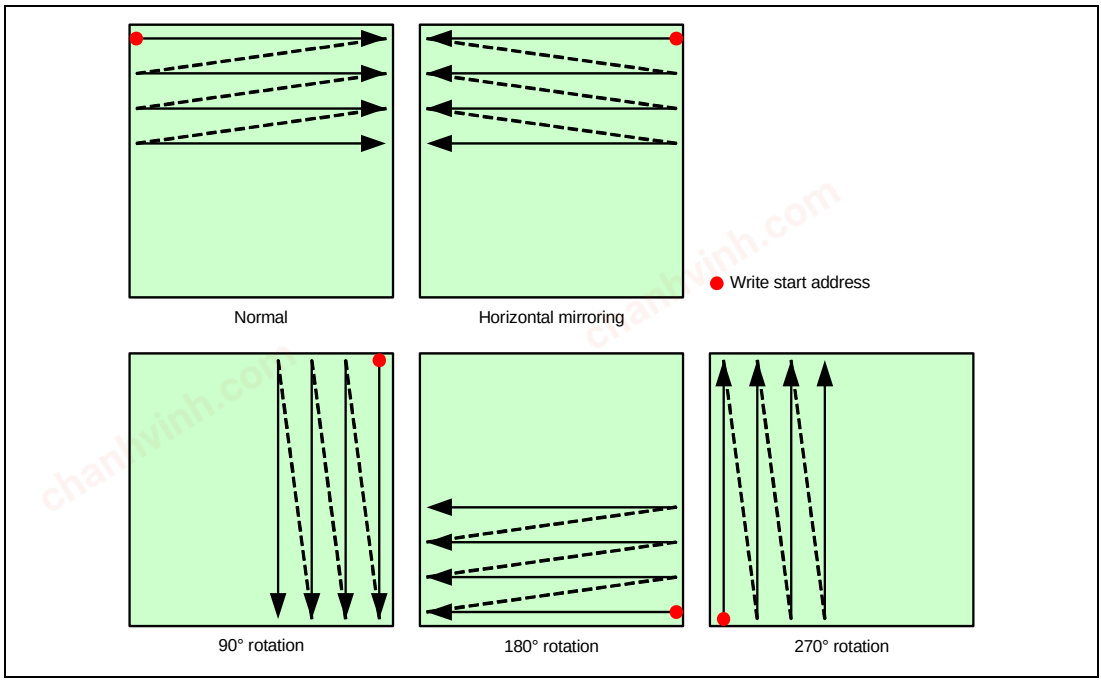

Figure 33.15 Data Arrangement in Frame Buffer in Various Writing Modes

chanhvinh.com

(5) Frame Buffer Management

The scaling control block can handle multiple frames as the frame buffer.

Data is written to the buffer in cyclic mode according to the number of frames specified by the RES_FLM_NUM bits.

For rotation, the RES_FLM_NUM bits should be set to 1 (2 frames).

To use the frame buffer as the ring buffer in line mode, the RES_FLM_NUM bits should be set to 0 (1 frame) and the RES_LOOP bit to 1.

Table 33.32 Frame Buffer Write Control

Register Name	Bit Name	Initial Value	Description
SCL1_WR3	RES_FLM_NUM [9:0]	1	Number of Frames of Buffer to be Written to Number of frames defined by RES_FLM_NUM + 1 are used. For normal image display: 0 or 1(one or two planes) For horizontal mirror image display: 0 or 1 (one or two planes) For rotated image display: 1 (2 planes) For video recording: the number of frames to be stored − 1
SCL1_WR1	RES_LOOP	0	Frame Buffer Write Mode Select 0: Frame mode 1: Line mode (read as ring buffer)
SCL1_WR7	RES_FLM_CNT [9:0]	—	Frame Number of Frame Being Accessed

chanhvinh.com

(6) Buffer Overflow Handling

If writing to the frame buffer cannot be completed due to bus-traffic related problems, an overflow interrupt can be output to the interrupt controller.

Table 33.33 Buffer Overflow Detection

Register Name	Bit Name	Initial Value	Description
SCL1_WR7	RES_OVERFLOW	—	Line Buffer Overflow Detect 1: Line buffer has overflowed. 0: Line buffer has not overflowed.

(7) Frame Buffer Write End Flag

When writing one frame of data to the frame buffer is completed, a frame buffer write end interrupt can be output to the interrupt controller.

33.1.17 Selecting a Scaling-up Process or Graphics 1 Process

Scaling-up process and graphics 1 process are mutually exclusive and thus frame buffer cannot be read out simultaneously for the processes.

When displaying input video image signals or displaying enlarged graphics, data is read from the frame buffer via the scaling-up control block.

However, graphics can be enlarged and displayed by the scaling-up control block only when the RGB565, RGB888, or YCbCr422 format is used.

When displaying graphics without enlargement, the data is read from the frame buffer via the graphics 1 processing block.

With the RES_IBUS_SYNC_SEL bit, sync signals for reading out the frame buffer and read size setting bits are selected.

chanhvinh.com

Table 33.34 Selection of Scaling-Up Process and Graphics 1 Process

Type of Output Scaling Display	RES_IBUS_ SYNC_SEL	Sync Signals for Frame Buffer Read	Frame Buffer Read Size Setting Bits	Display Enabling Bits
Input video signal display Enlarged graphics display	0	Output from scaling-up control block	RES_IN_VW RES_IN_HW	RES_P_VS RES_P_VW RES_P_HS RES_P_HW
Graphics display	1	Output from graphics 1 processing block	GR1_FLM_LNUM* GR1_HW*	GR1_GRC_VS GR1_GRC_VW GR1_GRC_HS GR1_GRC_HW

Note: * The value set to the register + 1 is the actual read size.

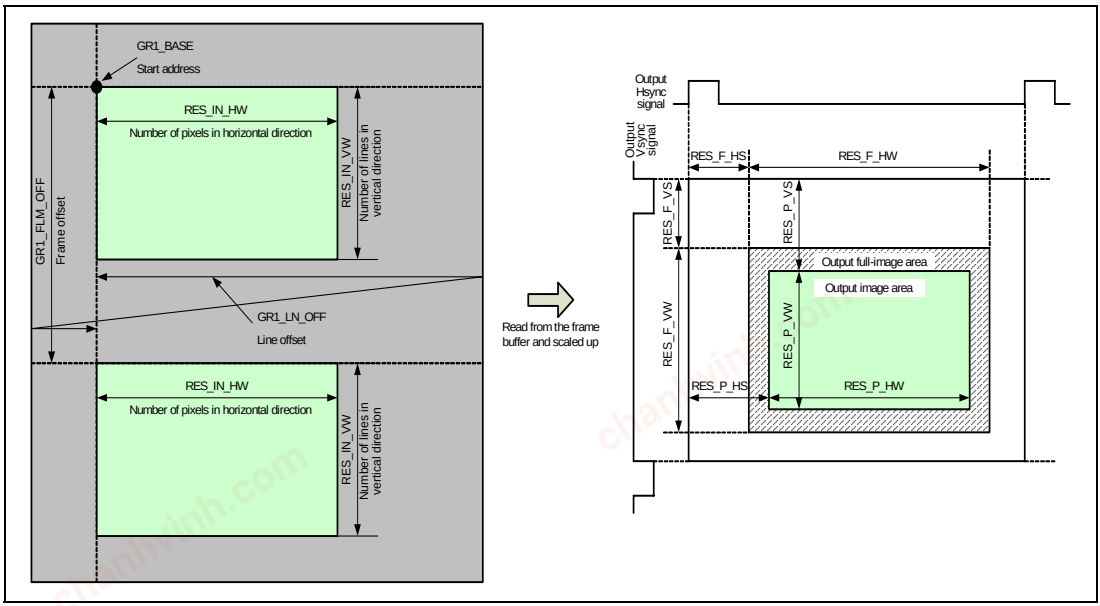

Figure 33.16 Area Setting for Input Video Image Signal Display and Enlarged Graphics Display

chanhvinh.com

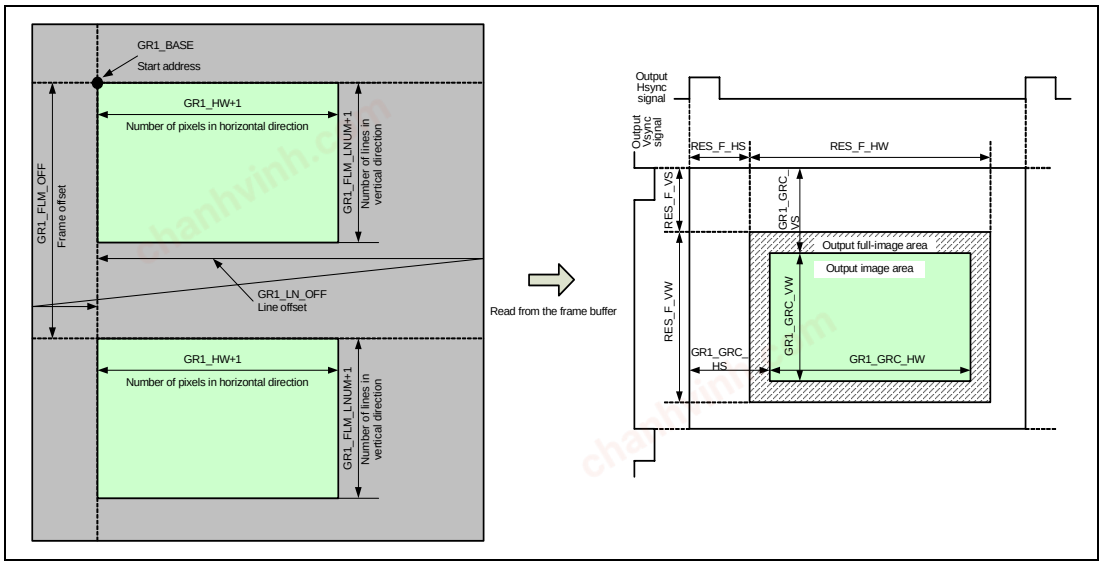

Figure 33.17 Area Setting for Graphics Display

Table 33.35 Scaling-Up Process or Graphics 1 Process Selection

Register Name	Bit Name	Initial Value	Description
SCL0_US8	RES_IBUS_SYNC_SEL	0	Sync Signal Select for Frame Buffer Read Block 0: Sync signals from the scaling-up control block 1: Sync signals from the graphics processing block

The GR1_DISP_SEL bits are used to select a display by the scaling-up control block (video image display or enlarged graphics display) or graphics display.

For details on the graphics processing, refer to the section "Image Synthesizer" described below.

33.1.18 Reading from Frame Buffer

For frame buffer read operation and graphics processing, refer to the section "Image Synthesizer" to be described.

chanhvinh.com

33.2 Register Descriptions

Table 33.36 shows the register configuration.

- Symbols used in Register Description:
  Initial value: Register value after a reset
  —: Undefined value
  R/W: Readable/writable. The written value can be read.
  R/WC0: Readable/writable. Writing 0 initializes the bit. Writing 1 is ignored.
  R/WC1: Readable/writable. Writing 1 initializes the bit. Writing 0 is ignored.
  R: Read-only. The write value should always be 0.
  —/W: Write-only. The read value is undefined.

Table 33.36 Register Configuration of the Scaler

Name	Abbreviation	R/W	Initial Value	Address	Access Size
SCL0 register update control register	SCL0_UPDATE	R/WC1	H'0000 0000	H'FFFF 7500	32/16
Mask control register	SCL0_FRC1	R/W	H'0AF0 0001	H'FFFF 7504	32/16
Missing Vsync compensation control register	SCL0_FRC2	R/W	H'0E10 0001	H'FFFF 7508	32/16
Output sync select register	SCL0_FRC3	R/W	H'0000 0001	H'FFFF 750C	32/16
Free-running period control register	SCL0_FRC4	R/W	H'020C 031F	H'FFFF 7510	32/16
Output delay control register	SCL0_FRC5	R/W	H'0000 0101	H'FFFF 7514	32/16
Full-screen vertical size register	SCL0_FRC6	R/W	H'0023 01E0	H'FFFF 7518	32/16
Full-screen horizontal size register	SCL0_FRC7	R/W	H'0090 0280	H'FFFF 751C	32/16
Vsync detection register	SCL0_FRC9	R	H'0000 0000	H'FFFF 7524	32/16
Scaling-down control register	SCL0_DS1	R/W	H'0000 0011	H'FFFF 752C	32/16
Vertical capture size register	SCL0_DS2	R/W	H'0012 00F0	H'FFFF 7530	32/16
Horizontal capture size register	SCL0_DS3	R/W	H'00F4 05A0	H'FFFF 7534	32/16
Horizontal scale down register	SCL0_DS4	R/W	H'1000 2408	H'FFFF 7538	32/16
Initial vertical phase register	SCL0_DS5	R/W	H'1800 0000	H'FFFF 753C	32/16
Vertical scaling register	SCL0_DS6	R/W	H'0000 07FC	H'FFFF 7540	32/16
Scaling-down control block output size register	SCL0_DS7	R/W	H'00F0 0280	H'FFFF 7544	32/16

chanhvinh.com

Name	Abbreviation	R/W	Initial Value	Address	Access Size
Scaling-up control register	SCL0_US1	R/W	H'0000 0011	H'FFFF 7548	32/16
Output image vertical size register	SCL0_US2	R/W	H'0023 01E0	H'FFFF 754C	32/16
Output image horizontal size register	SCL0_US3	R/W	H'0090 0280	H'FFFF 7550	32/16
Scaling-up control block input size register	SCL0_US4	R/W	H'00F0 0280	H'FFFF 7554	32/16
Horizontal scale up register	SCL0_US5	R/W	H'0000 2408	H'FFFF 7558	32/16
Horizontal scale up initial phase register	SCL0_US6	R/W	H'1000 0000	H'FFFF 755C	32/16
Trimming register	SCL0_US7	R/W	H'0000 0000	H'FFFF 7560	32/16
Frame buffer read select register	SCL0_US8	R/W	H'0000 0000	H'FFFF 7564	32/16
Background color register	SCL0_OVR1	R/W	H'0080 0080	H'FFFF 756C	32/16
SCL1 register update control register	SCL1_UPDATE	R/WC1	H'0000 0000	H'FFFF 7580	32/16
Writing mode register	SCL1_WR1	R/W	H'0000 0000	H'FFFF 7588	32/16
Write address register 1	SCL1_WR2	R/W	H'0000 0000	H'FFFF 758C	32/16
Write address register 2	SCL1_WR3	R/W	H'0800 0001	H'FFFF 7590	32/16
Write address register 3	SCL1_WR4	R/W	H'0008 0000	H'FFFF 7594	32/16
Frame sub-sampling register	SCL1_WR5	R/W	H'0000 1000	H'FFFF 759C	32/16
Bit reduction register	SCL1_WR6	R/W	H'0000 0000	H'FFFF 75A0	32/16
Write detection register	SCL1_WR7	R	H'0000 0000	H'FFFF 75A4	32/16
Graphics 1 register update control register	GR1_UPDATE	R/WC1	H'0000 0000	H'FFFF 7600	32/16
Frame buffer read control register (Graphics 1)	GR1_FLM_RD	R/W	H'0000 0000	H'FFFF 7604	32/16
Frame buffer control register 1 (Graphics 1)	GR1_FLM1	R/W	H'0000 0000	H'FFFF 7608	32/16
Frame buffer control register 2 (Graphics 1)	GR1_FLM2	R/W	H'0000 0000	H'FFFF 760C	32/16
Frame buffer control register 3 (Graphics 1)	GR1_FLM3	R/W	H'0800 0001	H'FFFF 7610	32/16
Frame buffer control register 4 (Graphics 1)	GR1_FLM4	R/W	H'0008 0000	H'FFFF 7614	32/16
Frame buffer control register 5 (Graphics 1)	GR1_FLM5	R/W	H'0000 03FF	H'FFFF 7618	32/16

chanhvinh.com

Name	Abbreviation	R/W	Initial Value	Address	Access Size
Frame buffer control register 6 (Graphics 1)	GR1_FLM6	R/W	H'8000 0000	H'FFFF 761C	32/16
Alpha blending control register 1 (Graphics 1)	GR1_AB1	R/W	H'0000 0000	H'FFFF 7620	32/16
Alpha blending control register 2 (Graphics 1)	GR1_AB2	R/W	H'0000 0000	H'FFFF 7624	32/16
Alpha blending control register 3 (Graphics 1)	GR1_AB3	R/W	H'0000 0000	H'FFFF 7628	32/16
Alpha blending control register 7 (Graphics 1)	GR1_AB7	R/W	H'00FF 0000	H'FFFF 7638	32/16
Alpha blending control register 8 (Graphics 1)	GR1_AB8	R/W	H'0000 0000	H'FFFF 763C	32/16
Alpha blending control register 9 (Graphics 1)	GR1_AB9	R/W	H'0000 0000	H'FFFF 7640	32/16
Alpha blending control register 10 (Graphics 1)	GR1_AB10	R/W	H'0000 0000	H'FFFF 7644	32/16
Alpha blending control register 11 (Graphics 1)	GR1_AB11	R/W	H'0000 0000	H'FFFF 7648	32/16
Background color control register (Graphics 1)	GR1_BASE	R/W	H'0000 8080	H'FFFF 764C	32/16
CLUT table control register (Graphics 1)	GR1_CLUT	R/W	H'0000 0000	H'FFFF 7650	32/16

chanhvinh.com

33.2.1 SCL0 Register Update Control Register (SCL0_UPDATE)

Bit:	31	30	29	28	27	26	25	24	23	22	21	20	19	18	17	16
	—	—	—	—	—	—	—	—	—	—	—	—	—	—	—	—
Initial value:	0	0	0	0	0	0	0	0	0	0	0	0	0	0	0	0
R/W:	R	R	R	R	R	R	R	R	R	R	R	R	R	R	R	R

Bit:	15	14	13	12	11	10	9	8	7	6	5	4	3	2	1	0
	—	—	SCL0_VEN_D	SCL0_VEN_C	—	—	—	SCL0_UPDATE	—	—	—	SCL0_VEN_B	—	—	—	SCL0_VEN_A
Initial value:	0	0	0	0	0	0	0	0	0	0	0	0	0	0	0	0
R/W:	R	R	R/WC1	R/WC1	R	R	R	R/WC1	R	R	R	R/WC1	R	R	R	R/WC1

Bit	Bit Name	Initial Value	R/W	Description
31 to 14	—	All 0	R	Reserved These bits are always read as 0. The write value should always be 0.
13	SCL0_VEN_D	0	R/WC1	Scaling-Up Control and Frame Buffer Read Control Register Update 0: Registers are not updated. 1: Registers are updated at the rising edge of the Vsync.
12	SCL0_VEN_C	0	R/WC1	Scaling-Down Control and Frame Buffer Read Control Register Update 0: Registers are not updated. 1: Registers are updated at the rising edge of the Vsync.
11 to 9	—	All 0	R	Reserved These bits are always read as 0. The write value should always be 0.
8	SCL0_UPDATE	0	R/WC1	SYNC Control Register Update 0: Registers are not updated. 1: Registers are updated.

chanhvinh.com

Bit	Bit Name	Initial Value	R/W	Description
7 to 5	—	All 0	R	Reserved These bits are always read as 0. The write value should always be 0.
4	SCL0_ VEN_B	0	R/WC1	Synchronization Control and Scaling-up Control Register Update 0: Registers are not updated. 1: Registers are updated at the rising edge of the Vsync.
3 to 1	—	All 0	R	Reserved These bits are always read as 0. The write value should always be 0.
0	SCL0_ VEN_A	0	R/WC1	Scaling-Down Control Register Update 0: Registers are not updated. 1: Registers are updated at the rising edge of the Vsync.

chanhvinh.com

33.2.2 Mask Control Register (SCL0_FRC1)

Bit:	31	30	29	28	27	26	25	24	23	22	21	20	19	18	17	16
	RES_VMASK[15:0]															
Initial value:	0	0	0	0	1	0	1	0	1	1	1	1	0	0	0	0
R/W:	R/W	R/W	R/W	R/W	R/W	R/W	R/W	R/W	R/W	R/W	R/W	R/W	R/W	R/W	R/W	R/W

Bit:	15	14	13	12	11	10	9	8	7	6	5	4	3	2	1	0
	—	—	—	—	—	—	—	—	—	—	—	—	—	—	—	RES_VMASK_ON
Initial value:	0	0	0	0	0	0	0	0	0	0	0	0	0	0	0	1
R/W:	R	R	R	R	R	R	R	R	R	R	R	R	R	R	R	R/W

Bit	Bit Name	Initial Value	R/W	Description
31 to 16	RES_VMASK [15:0]	2800	R/W	Repeated Vsync Signal Masking Period Sets the repeated Vsync signal masking period beginning at a Vsync signal in terms of 128 pixel-clock periods. Masking period [usec] = RES_VMASK × 128 ÷ pixel clock frequency [MHz]
15 to 1	—	All 0	R	Reserved These bits are always read as 0. The write value should always be 0.
0	RES_ VMASK_ON	1	R/W	Repeated Vsync Signal Masking Control 0: Repeated Vsync signal masking control is disabled. 1: Repeated Vsync signal masking control is enabled.

Note: This register is updated when the SCL0_UPDATE bit in the SCL0 register update control register (SCL0_UPDATE) is 1.

chanhvinh.com

33.2.3 Missing Vsync Compensation Control Register (SCL0_FRC2)

Bit:	31	30	29	28	27	26	25	24	23	22	21	20	19	18	17	16
	RES_VLACK[15:0]															
Initial value:	0	0	0	0	1	1	1	0	0	0	0	1	0	0	0	0
R/W:	R/W	R/W	R/W	R/W	R/W	R/W	R/W	R/W	R/W	R/W	R/W	R/W	R/W	R/W	R/W	R/W

Bit:	15	14	13	12	11	10	9	8	7	6	5	4	3	2	1	0
	—	—	—	—	—	—	—	—	—	—	—	—	—	—	—	RES_VLACK_ON
Initial value:	0	0	0	0	0	0	0	0	0	0	0	0	0	0	0	1
R/W:	R	R	R	R	R	R	R	R	R	R	R	R	R	R	R	R/W

Bit	Bit Name	Initial Value	R/W	Description
31 to 16	RES_VLACK [15:0]	3600	R/W	Missing-Sync Compensating Pulse Output Wait Time Sets the wait time before outputting a missing-sync compensating pulse after a Vsync signal. Wait time [usec] = RES_VLACK × 128 ÷ pixel clock frequency[MHz]
15 to 1	—	All 0	R	Reserved These bits are always read as 0. The write value should always be 0.
0	RES_VLACK_ON	1	R/W	Missing Vsync Signal Compensation 0: Compensation of missing Vsync signals is disabled. 1: Compensation of missing Vsync signals is enabled.

Note: This register is updated when the SCL0_UPDATE bit in the SCL0 register update control register (SCL0_UPDATE) is 1.

chanhvinh.com

33.2.4 Output Sync Select Register (SCL0_FRC3)

Bit:	31	30	29	28	27	26	25	24	23	22	21	20	19	18	17	16
	—	—	—	—	—	—	—	—	—	—	—	—	—	—	—	—
Initial value:	0	0	0	0	0	0	0	0	0	0	0	0	0	0	0	0
R/W:	R	R	R	R	R	R	R	R	R	R	R	R	R	R	R	R

Bit:	15	14	13	12	11	10	9	8	7	6	5	4	3	2	1	0
	—	—	—	—	—	—	—	—	—	—	—	—	—	—	—	RES_VS_SEL
Initial value:	0	0	0	0	0	0	0	0	0	0	0	0	0	0	0	1
R/W:	R	R	R	R	R	R	R	R	R	R	R	R	R	R	R	R/W

Bit	Bit Name	Initial Value	R/W	Description
31 to 1	—	All 0	R	Reserved These bits are always read as 0. The write value should always be 0.
0	RES_VS_SEL	1	R/W	Vsync Signal Output Select 0: Externally input Vsync signal 1: Internally generated free-running Vsync signal

Note: This register is updated when the SCL0_UPDATE bit in the SCL0 register update control register (SCL0_UPDATE) is 1.

chanhvinh.com

33.2.5 Free-Running Period Control Register (SCL0_FRC4)

Bit:	31	30	29	28	27	26	25	24	23	22	21	20	19	18	17	16
	—	—	—	—	—	RES_FV[10:0]										
Initial value:	0	0	0	0	0	0	1	0	0	0	0	0	1	1	0	0
R/W:	R	R	R	R	R	R/W	R/W	R/W	R/W	R/W	R/W	R/W	R/W	R/W	R/W	R/W

Bit:	15	14	13	12	11	10	9	8	7	6	5	4	3	2	1	0
	—	—	—	—	—	RES_FH[10:0]										
Initial value:	0	0	0	0	0	0	1	1	0	0	0	1	1	1	1	1
R/W:	R	R	R	R	R	R/W	R/W	R/W	R/W	R/W	R/W	R/W	R/W	R/W	R/W	R/W

Bit	Bit Name	Initial Value	R/W	Description
31 to 27	—	All 0	R	Reserved These bits are always read as 0. The write value should always be 0.
26 to 16	RES_FV [10:0]	524	R/W	Free-Running Vsync Period Setting Free-running Vsync period = (RES_FV + 1) × horizontal period [usec]
15 to 11	—	All 0	R	Reserved These bits are always read as 0. The write value should always be 0.
10 to 0	RES_FH [10:0]	799	R/W	Hsync Period Setting Hsync period [usec] = (RES_FH +1) ÷ pixel clock frequency [MHz]

Note: This register is updated when the SCL0_UPDATE bit in the SCL0 register update control register (SCL0_UPDATE) is 1.

chanhvinh.com

33.2.6 Output Delay Control Register (SCL0_FRC5)

Bit:	31	30	29	28	27	26	25	24	23	22	21	20	19	18	17	16
	—	—	—	—	—	—	—	—	—	—	—	—	—	—	—	—
Initial value:	0	0	0	0	0	0	0	0	0	0	0	0	0	0	0	0
R/W:	R	R	R	R	R	R	R	R	R	R	R	R	R	R	R	R

Bit:	15	14	13	12	11	10	9	8	7	6	5	4	3	2	1	0
	—	—	—	—	—	—	—	RES_FLD_DLY_SEL	RES_VSDLY[7:0]							
Initial value:	0	0	0	0	0	0	0	1	0	0	0	0	0	0	0	1
R/W:	R	R	R	R	R	R	R	R/W	R/W	R/W	R/W	R/W	R/W	R/W	R/W	R/W

Bit	Bit Name	Initial Value	R/W	Description
31 to 9	—	All 0	R	Reserved These bits are always read as 0. The write value should always be 0.
8	RES_FLD_DLY_SEL	1	R/W	Field Determination Signal Delay Control 0: No delay 1: Delay of one vertical cycle
7 to 0	RES_VSDLY[7:0]	1	R/W	Vsync Signal Delay Control Adjusts the Vsync signal delay in the output Hsync period units. Vsync signal delay [usec]: RES_VSDLY × output Hsync period [usec]

Note: This register is updated when the SCL0_VEN_B bit in the SCL0 register update control register (SCL0_UPDATE) is 1.

chanhvinh.com

33.2.7 Full-Screen Vertical Size Register (SCL0_FRC6)

Bit:	31	30	29	28	27	26	25	24	23	22	21	20	19	18	17	16
	—	—	—	—	—	RES_F_VS[10:0]										
Initial value:	0	0	0	0	0	0	0	0	0	0	1	0	0	0	1	1
R/W:	R	R	R	R	R	R/W	R/W	R/W	R/W	R/W	R/W	R/W	R/W	R/W	R/W	R/W

Bit:	15	14	13	12	11	10	9	8	7	6	5	4	3	2	1	0
	—	—	—	—	—	RES_F_VW[10:0]										
Initial value:	0	0	0	0	0	0	0	1	1	1	1	0	0	0	0	0
R/W:	R	R	R	R	R	R/W	R/W	R/W	R/W	R/W	R/W	R/W	R/W	R/W	R/W	R/W

Bit	Bit Name	Initial Value	R/W	Description
31 to 27	—	All 0	R	Reserved These bits are always read as 0. The write value should always be 0.
26 to 16	RES_F_VS [10:0]	35	R/W	Vertical Enable Signal Start Position for Full Screen. (VSYNC + V backporch lines) Note: The set value should be four or more (lines). RES_F_VS + RES_F_VW should be equal to or less than 2039 (lines).
15 to 11	—	All 0	R	Reserved These bits are always read as 0. The write value should always be 0.
10 to 0	RES_F_VW [10:0]	480	R/W	Vertical Enable Signal Width for Full Screen (lines) Note: RES_F_VS + RES_F_VW should be equal to or less than 2039 (lines).

Note: This register is updated when the SCL0_VEN_B bit in the SCL0 register update control register (SCL0_UPDATE) is 1.

chanhvinh.com

33.2.8 Full-Screen Horizontal Size Register (SCL0_FRC7)

Bit:	31	30	29	28	27	26	25	24	23	22	21	20	19	18	17	16
	—	—	—	—	—	RES_F_HS[10:0]										
Initial value:	0	0	0	0	0	0	0	0	1	0	0	1	0	0	0	0
R/W:	R	R	R	R	R	R/W	R/W	R/W	R/W	R/W	R/W	R/W	R/W	R/W	R/W	R/W

Bit:	15	14	13	12	11	10	9	8	7	6	5	4	3	2	1	0
	—	—	—	—	—	RES_F_HW[10:0]										
Initial value:	0	0	0	0	0	0	1	0	1	0	0	0	0	0	0	0
R/W:	R	R	R	R	R	R/W	R/W	R/W	R/W	R/W	R/W	R/W	R/W	R/W	R/W	R/W

Bit	Bit Name	Initial Value	R/W	Description
31 to 27	—	All 0	R	Reserved These bits are always read as 0. The write value should always be 0.
26 to 16	RES_F_HS [10:0]	144	R/W	Horizontal Enable Signal Start Position for Full Screen. (HSYNC+H backporch pixel-clock cycles) Note: The set value should be 16 or more (clock cycles). RES_F_HS + RES_F_HW should be equal to or less than 2015 (clock cycles).
15 to 11	—	All 0	R	Reserved These bits are always read as 0. The write value should always be 0.
10 to 0	RES_F_HW [10:0]	640	R/W	Horizontal Enable Signal Width for Full Screen (pixel-clock cycles) Note: RES_F_HS + RES_F_HW should be equal to or less than 2015 (clock cycles).

Note: This register is updated when the SCL0_VEN_B bit in the SCL0 register update control register (SCL0_UPDATE) is 1.

chanhvinh.com

33.2.9 Vsync Detection Register (SCL0_FRC9)

Bit:	31	30	29	28	27	26	25	24	23	22	21	20	19	18	17	16
	—	—	—	—	—	—	—	—	—	—	—	—	—	—	—	—
Initial value:	0	0	0	0	0	0	0	0	0	0	0	0	0	0	0	0
R/W:	R	R	R	R	R	R	R	R	R	R	R	R	R	R	R	R

Bit:	15	14	13	12	11	10	9	8	7	6	5	4	3	2	1	0
	—	—	—	—	—	—	—	—	—	—	—	RES_QVLOCK	—	—	—	RES_QVLACK
Initial value:	0	0	0	0	0	0	0	0	0	0	0	0	0	0	0	0
R/W:	R	R	R	R	R	R	R	R	R	R	R	R	R	R	R	R

Bit	Bit Name	Initial Value	R/W	Description
31 to 5	—	All 0	R	Reserved These bits are always read as 0. The write value should always be 0.
4	RES_QVLOCK	0	R	Locked Vsync Signal Detection Flag 1: No repeated or missing Vsync signal input has been detected for four or more vertical periods. 0: Repeated or missing Vsync signal input has been detected.
3 to 1	—	All 0	R	Reserved These bits are always read as 0. The write value should always be 0.
0	RES_QVLACK	0	R	Missing Vsync Signal Detection Flag 1: Missing Vsync signal input has been detected. 0: No missing Vsync signal input has been detected.

chanhvinh.com

33.2.10 Scaling-Down Control Register (SCL0_DS1)

Bit:	31	30	29	28	27	26	25	24	23	22	21	20	19	18	17	16
	—	—	—	—	—	—	—	—	—	—	—	—	—	—	—	—
Initial value:	0	0	0	0	0	0	0	0	0	0	0	0	0	0	0	0
R/W:	R	R	R	R	R	R	R	R	R	R	R	R	R	R	R	R

Bit:	15	14	13	12	11	10	9	8	7	6	5	4	3	2	1	0
	—	—	—	—	—	—	—	—	—	—	—	RES_DS_V_ON	—	—	—	RES_DS_H_ON
Initial value:	0	0	0	0	0	0	0	0	0	0	0	1	0	0	0	1
R/W:	R	R	R	R	R	R	R	R	R	R	R	R/W	R	R	R	R/W

Bit	Bit Name	Initial Value	R/W	Description
31 to 5	—	All 0	R	Reserved These bits are always read as 0. The write value should always be 0.
4	RES_DS_V_ON	1	R/W	Vertical Scale Down On/Off 0: Off 1: On
3 to 1	—	All 0	R	Reserved These bits are always read as 0. The write value should always be 0.
0	RES_DS_H_ON	1	R/W	Horizontal Scale Down On/Off 0: Off 1: On

Note: This register is updated when the SCL0_VEN_A bit in the SCL0 register update control register (SCL0_UPDATE) is 1.

chanhvinh.com

33.2.11 Vertical Capture Size Register (SCL0_DS2)

Bit:	31	30	29	28	27	26	25	24	23	22	21	20	19	18	17	16
	—	—	—	—	—	RES_VS[10:0]										
Initial value:	0	0	0	0	0	0	0	0	0	0	0	1	0	0	1	0
R/W:	R	R	R	R	R	R/W	R/W	R/W	R/W	R/W	R/W	R/W	R/W	R/W	R/W	R/W

Bit:	15	14	13	12	11	10	9	8	7	6	5	4	3	2	1	0
	—	—	—	—	—	RES_VW[10:0]										
Initial value:	0	0	0	0	0	0	0	0	1	1	1	1	0	0	0	0
R/W:	R	R	R	R	R	R/W	R/W	R/W	R/W	R/W	R/W	R/W	R/W	R/W	R/W	R/W

Bit	Bit Name	Initial Value	R/W	Description
31 to 27	—	All 0	R	Reserved These bits are always read as 0. The write value should always be 0.
26 to 16	RES_VS [10:0]	18	R/W	Vertical Position Setting for Video Signal Capturing (VSYNC + V backporch lines) Note: The set value should be four or more (lines). RES_VS + RES_VW should be equal to or less than 2039 (lines).
15 to 11	—	All 0	R	Reserved These bits are always read as 0. The write value should always be 0.
10 to 0	RES_VW [10:0]	240	R/W	Vertical Width of Video Signal to be Captured (Lines) Note: RES_VS + RES_VW should be equal to or less than 2039 (lines).

Note: This register is updated when the SCL0_VEN_A bit in the SCL0 register update control register (SCL0_UPDATE) is 1.

chanhvinh.com

33.2.12 Horizontal Capture Size Register (SCL0_DS3)

Bit:	31	30	29	28	27	26	25	24	23	22	21	20	19	18	17	16
	—	—	—	—	—	RES_HS[10:0]										
Initial value:	0	0	0	0	0	0	0	0	1	1	1	1	0	1	0	0
R/W:	R	R	R	R	R	R/W	R/W	R/W	R/W	R/W	R/W	R/W	R/W	R/W	R/W	R/W

Bit:	15	14	13	12	11	10	9	8	7	6	5	4	3	2	1	0
	—	—	—	—	—	RES_HW[10:0]										
Initial value:	0	0	0	0	0	1	0	1	1	0	1	0	0	0	0	0
R/W:	R	R	R	R	R	R/W	R/W	R/W	R/W	R/W	R/W	R/W	R/W	R/W	R/W	R/W

Bit	Bit Name	Initial Value	R/W	Description
31 to 27	—	All 0	R	Reserved These bits are always read as 0. The write value should always be 0.
26 to 16	RES_HS [10:0]	244	R/W	Horizontal Position Setting for Video Signal Capturing (HSYNC + H backporch video-image clock cycles) Note: The set value should be 16 or more (clock cycles). RES_HS + RES_HW should be equal to or less than 2015 (clock cycles).
15 to 11	—	All 0	R	Reserved These bits are always read as 0. The write value should always be 0.
10 to 0	RES_HW [10:0]	1440	R/W	Horizontal Width of Video Signal to be Captured (Video-image clock cycles) Note: RES_HS + RES_HW should be equal to or less than 2015 (clock cycles).

Note: This register is updated when the SCL0_VEN_A bit in the SCL0 register update control register (SCL0_UPDATE) is 1.

chanhvinh.com

33.2.13 Horizontal Scale Down Register (SCL0_DS4)

Bit:	31	30	29	28	27	26	25	24	23	22	21	20	19	18	17	16
	—	—	RES_PFIL_SEL	RES_DS_H_INTERPOTYP	—	—	—	—	—	—	—	—	—	—	—	—
Initial value:	0	0	0	1	0	0	0	0	0	0	0	0	0	0	0	0
R/W:	R	R	R/W	R/W	R	R	R	R	R	R	R	R	R	R	R	R

Bit:	15	14	13	12	11	10	9	8	7	6	5	4	3	2	1	0
	RES_DS_H_RATIO[15:0]															
Initial value:	0	0	1	0	0	1	0	0	0	0	0	0	1	0	0	0
R/W:	R/W	R/W	R/W	R/W	R/W	R/W	R/W	R/W	R/W	R/W	R/W	R/W	R/W	R/W	R/W	R/W

Bit	Bit Name	Initial Value	R/W	Description
31, 30	—	All 0	R	Reserved These bits are always read as 0. The write value should always be 0.
29	RES_PFIL_SEL	0	R/W	Prefilter Mode Select for Brightness Signals 0: The prefilter is turned off. 1: The prefilter is turned on. (1/4 + 1/2 + 1/4)
28	RES_DS_H_INTERPOTYP	1	R/W	Horizontal Interpolation Mode Select 0: Hold interpolation 1: Linear interpolation
27 to 16	—	All 0	R	Reserved These bits are always read as 0. The write value should always be 0.
15 to 0	RES_DS_H_RATIO [15:0]	9224	R/W	Horizontal Scale Down Ratio ([15:12]: Integer part, [11:0]: Decimal part) round(RES_HW ÷ RES_OUT_HW × 4096) RES_DS_H_RATIO < 4096: Setting prohibited RES_DS_H_RATIO = 4096: 100% scale up RES_DS_H_RATIO > 4096: Scale down

Note: This register is updated when the SCL0_VEN_A bit in the SCL0 register update control register (SCL0_UPDATE) is 1.

chanhvinh.com

33.2.14 Initial Vertical Phase Register (SCL0_DS5)

Bit:	31	30	29	28	27	26	25	24	23	22	21	20	19	18	17	16
	—	—	—	RES_V_INTERPOTYP	RES_TOP_INIPHASE[11:0]											
Initial value:	0	0	0	1	1	0	0	0	0	0	0	0	0	0	0	0
R/W:	R	R	R	R/W	R/W	R/W	R/W	R/W	R/W	R/W	R/W	R/W	R/W	R/W	R/W	R/W

Bit:	15	14	13	12	11	10	9	8	7	6	5	4	3	2	1	0
	—	—	—	—	RES_BTM_INIPHASE[11:0]											
Initial value:	0	0	0	0	0	0	0	0	0	0	0	0	0	0	0	0
R/W:	R	R	R	R	R/W	R/W	R/W	R/W	R/W	R/W	R/W	R/W	R/W	R/W	R/W	R/W

Bit	Bit Name	Initial Value	R/W	Description
31 to 29	—	All 0	R	Reserved These bits are always read as 0. The write value should always be 0.
28	RES_V_INTERPOTYP	1	R/W	Vertical Interpolation Mode Select 0: Hold interpolation 1: Linear interpolation
27 to 16	RES_TOP_INIPHASE [11:0]	2048	R/W	Vertical Interpolation Start Phase for Top Field 0 to 4095 (0 to approx.1.0)
15 to 12	—	All 0	R	Reserved These bits are always read as 0. The write value should always be 0.
11 to 0	RES_BTM_INIPHASE [11:0]	0	R/W	Vertical Interpolation Start Phase for Bottom Field 0 to 4095 (0 to approx.1.0)

Note: This register is updated when the SCL0_VEN_A and SCL0_VEN_B bits in the SCL0 register update control register (SCL0_UPDATE) are 1.

chanhvinh.com

33.2.15 Vertical Scaling Register (SCL0_DS6)

Bit:	31	30	29	28	27	26	25	24	23	22	21	20	19	18	17	16
	—	—	—	—	—	—	—	—	—	—	—	—	—	—	—	—
Initial value:	0	0	0	0	0	0	0	0	0	0	0	0	0	0	0	0
R/W:	R	R	R	R	R	R	R	R	R	R	R	R	R	R	R	R

Bit:	15	14	13	12	11	10	9	8	7	6	5	4	3	2	1	0
	RES_V_RATIO[15:0]															
Initial value:	0	0	0	0	0	1	1	1	1	1	1	1	1	1	0	0
R/W:	R/W	R/W	R/W	R/W	R/W	R/W	R/W	R/W	R/W	R/W	R/W	R/W	R/W	R/W	R/W	R/W

Bit	Bit Name	Initial Value	R/W	Description
31 to 16	—	All 0	R	Reserved These bits are always read as 0. The write value should always be 0.
15 to 0	RES_V_RATIO[15:0]	2044	R/W	Vertical Scale Up/Down Ratio ([15:12]: Integer part, [11:0]: Decimal part) For scale down: round (RES_VW ÷ RES_OUT_VW × 4096) For scale up: round (RES_IN_VW ÷ RES_P_VW × 4096) RES_V_RATIO < 4096: Scale up RES_V_RATIO = 4096: 100% scale up RES_V_RATIO > 4096: Scale down

Note: These bits updated when the SCL0_VEN_A and SCL0_VEN_B bits in the SCL0 register update control register (SCL0_UPDATE) are 1.

chanhvinh.com

33.2.16 Scaling-Down Control Block Output Size Register (SCL0_DS7)

Bit:	31	30	29	28	27	26	25	24	23	22	21	20	19	18	17	16
	—	—	—	—	—	RES_OUT_VW[10:0]										
Initial value:	0	0	0	0	0	0	0	0	1	1	1	1	0	0	0	0
R/W:	R	R	R	R	R	R/W	R/W	R/W	R/W	R/W	R/W	R/W	R/W	R/W	R/W	R/W

Bit:	15	14	13	12	11	10	9	8	7	6	5	4	3	2	1	0
	—	—	—	—	—	RES_OUT_HW[10:0]										
Initial value:	0	0	0	0	0	0	1	0	1	0	0	0	0	0	0	0
R/W:	R	R	R	R	R	R/W	R/W	R/W	R/W	R/W	R/W	R/W	R/W	R/W	R/W	R/W

Bit	Bit Name	Initial Value	R/W	Description
31 to 27	—	All 0	R	Reserved These bits are always read as 0. The write value should always be 0.
26 to 16	RES_OUT_VW[10:0]	240	R/W	Number of Valid Lines in Vertical Direction Output by Scaling-down Control Block (lines) This bit setting is used for the number of lines to be written to the frame buffer. When SCL1_WR1.GR1_FLM_LOOP is 0 (frame write mode), specify the number of lines for one frame. When GR1_FLM5.GR1_FLM_LOOP is 1 (line write mode), specify the number of lines for repeated write. Note: The RES_OUT_VW value should be aligned in 4-line units and equal to or smaller than the RES_VW value.
15 to 11	—	All 0	R	Reserved These bits are always read as 0. The write value should always be 0.
10 to 0	RES_OUT_HW[10:0]	640	R/W	Number of Valid Horizontal Pixels Output by Scaling-Down Control Block (video-image clock cycles) Note: The RES_OUT_HW value should be aligned in 4-pixel units and equal to or smaller than the RES_HW value.

Note: This register is updated when the SCL0_VEN_A and SCL0_VEN_C bits in the SCL0 register update control register (SCL0_UPDATE) are 1.

chanhvinh.com

33.2.17 Scaling-Up Control Register (SCL0_US1)

Bit:	31	30	29	28	27	26	25	24	23	22	21	20	19	18	17	16
	—	—	—	—	—	—	—	—	—	—	—	—	—	—	—	—
Initial value:	0	0	0	0	0	0	0	0	0	0	0	0	0	0	0	0
R/W:	R	R	R	R	R	R	R	R	R	R	R	R	R	R	R	R

Bit:	15	14	13	12	11	10	9	8	7	6	5	4	3	2	1	0
	—	—	—	—	—	—	—	—	—	—	—	RES_US_V_ON	—	—	—	RES_US_H_ON
Initial value:	0	0	0	0	0	0	0	0	0	0	0	1	0	0	0	1
R/W:	R	R	R	R	R	R	R	R	R	R	R	R/W	R	R	R	R/W

Bit	Bit Name	Initial Value	R/W	Description
31 to 5	—	All 0	R	Reserved These bits are always read as 0. The write value should always be 0.
4	RES_US_V_ON	1	R/W	Vertical Scale Up On/Off 0: Off 1: On
3 to 1	—	All 0	R	Reserved These bits are always read as 0. The write value should always be 0.
0	RES_US_H_ON	1	R/W	Horizontal Scale Up On/Off 0: Off 1: On

Note: This register is updated when the SCL0_VEN_B bit in the SCL0 register update control register (SCL0_UPDATE) is 1.

chanhvinh.com

33.2.18 Output Image Vertical Size Register (SCL0_US2)

Bit:	31	30	29	28	27	26	25	24	23	22	21	20	19	18	17	16
	—	—	—	—	—	RES_P_VS[10:0]										
Initial value:	0	0	0	0	0	0	0	0	0	0	1	0	0	0	1	1
R/W:	R	R	R	R	R	R/W	R/W	R/W	R/W	R/W	R/W	R/W	R/W	R/W	R/W	R/W

Bit:	15	14	13	12	11	10	9	8	7	6	5	4	3	2	1	0
	—	—	—	—	—	RES_P_VW[10:0]										
Initial value:	0	0	0	0	0	0	0	1	1	1	1	0	0	0	0	0
R/W:	R	R	R	R	R	R/W	R/W	R/W	R/W	R/W	R/W	R/W	R/W	R/W	R/W	R/W

Bit	Bit Name	Initial Value	R/W	Description
31 to 27	—	All 0	R	Reserved These bits are always read as 0. The write value should always be 0.
26 to 16	RES_P_VS [10:0]	35	R/W	Vertical Enable Signal Start Position for Output Image (VSYNC + V backporch lines) Note: The set value should be four or more (lines). RES_P_VS + RES_P_VW should be equal to or less than 2039 (lines).
15 to 11	—	All 0	R	Reserved These bits are always read as 0. The write value should always be 0.
10 to 0	RES_P_VW [10:0]	480	R/W	Vertical Enable Signal Width for Output Image (lines) Note: RES_P_VS + RES_P_VW should be equal to or less than 2039 (lines).

Note: This register is updated when the SCL0_VEN_B bit in the SCL0 register update control register (SCL0_UPDATE) is 1.

chanhvinh.com

33.2.19 Output Image Horizontal Size Register (SCL0_US3)

Bit:	31	30	29	28	27	26	25	24	23	22	21	20	19	18	17	16
	—	—	—	—	—	RES_P_HS[10:0]										
Initial value:	0	0	0	0	0	0	0	0	1	0	0	1	0	0	0	0
R/W:	R	R	R	R	R	R/W	R/W	R/W	R/W	R/W	R/W	R/W	R/W	R/W	R/W	R/W

Bit:	15	14	13	12	11	10	9	8	7	6	5	4	3	2	1	0
	—	—	—	—	—	RES_P_HW[10:0]										
Initial value:	0	0	0	0	0	0	1	0	1	0	0	0	0	0	0	0
R/W:	R	R	R	R	R	R/W	R/W	R/W	R/W	R/W	R/W	R/W	R/W	R/W	R/W	R/W

Bit	Bit Name	Initial Value	R/W	Description
31 to 27	—	All 0	R	Reserved These bits are always read as 0. The write value should always be 0.
26 to 16	RES_P_HS [10:0]	144	R/W	Horizontal Enable Signal Start Position for Output Image (HSYNC+H backporch pixel-clock cycles) Note: The set value should be 16 or more (clock cycles). RES_P_HS + RES_P_HW should be equal to or less than 2015 (clock cycles).
15 to 11	—	All 0	R	Reserved These bits are always read as 0. The write value should always be 0.
10 to 0	RES_P_HW [10:0]	640	R/W	Horizontal Enable Signal Width for Output Image (pixel-clock cycles) Note: RES_P_HS + RES_P_HW should be equal to or less than 2015 (clock cycles).

Note: This register is updated when the SCL0_VEN_B bit in the SCL0 register update control register (SCL0_UPDATE) is 1.

chanhvinh.com

33.2.20 Scaling-Up Control Block Input Size Register (SCL0_US4)

Bit:	31	30	29	28	27	26	25	24	23	22	21	20	19	18	17	16
	—	—	—	—	—	RES_IN_VW[10:0]										
Initial value:	0	0	0	0	0	0	0	0	1	1	1	1	0	0	0	0
R/W:	R	R	R	R	R	R/W	R/W	R/W	R/W	R/W	R/W	R/W	R/W	R/W	R/W	R/W

Bit:	15	14	13	12	11	10	9	8	7	6	5	4	3	2	1	0
	—	—	—	—	—	RES_IN_HW[10:0]										
Initial value:	0	0	0	0	0	0	1	0	1	0	0	0	0	0	0	0
R/W:	R	R	R	R	R	R/W	R/W	R/W	R/W	R/W	R/W	R/W	R/W	R/W	R/W	R/W

Bit	Bit Name	Initial Value	R/W	Description
31 to 27	—	All 0	R	Reserved These bits are always read as 0. The write value should always be 0.
26 to 16	RES_IN_VW[10:0]	240	R/W	Number of Valid Lines in Vertical Direction Input to Scaling-down Control Block (lines)
15 to 11	—	All 0	R	Reserved These bits are always read as 0. The write value should always be 0.
10 to 0	RES_IN_HW[10:0]	640	R/W	Number of Valid Horizontal Pixels Input to Scaling-down Control Block (pixel-clock cycles)

Note: This register is updated when the SCL0_VEN_B and SCL0_VEN_D bits in the SCL0 register update control register (SCL0_UPDATE) are 1.

chanhvinh.com

33.2.21 Horizontal Scale Up Register (L0_US5)

Bit:	31	30	29	28	27	26	25	24	23	22	21	20	19	18	17	16
	—	—	—	—	—	—	—	—	—	—	—	—	—	—	—	—
Initial value:	0	0	0	0	0	0	0	0	0	0	0	0	0	0	0	0
R/W:	R	R	R	R	R	R	R	R	R	R	R	R	R	R	R	R

Bit:	15	14	13	12	11	10	9	8	7	6	5	4	3	2	1	0
	RES_US_H_RATIO[15:0]															
Initial value:	0	0	1	0	0	1	0	0	0	0	0	0	1	0	0	0
R/W:	R/W	R/W	R/W	R/W	R/W	R/W	R/W	R/W	R/W	R/W	R/W	R/W	R/W	R/W	R/W	R/W

Bit	Bit Name	Initial Value	R/W	Description
31 to 16	—	All 0	R	Reserved These bits are always read as 0. The write value should always be 0.
15 to 0	RES_US_H_RATIO [15:0]	9224	R/W	Horizontal Scale Up Ratio ([15:12]: Integer part, [11:0]: Decimal part) round (RES_IN_HW ÷ RES_P_HW × 4096) RES_US_H_RATIO < 4096: Scale up RES_US_H_RATIO = 4096: 100% scale up RES_US_H_RATIO > 4096: Setting prohibited

Note: This register is updated when the SCL0_VEN_B bit in the SCL0 register update control register (SCL0_UPDATE) is 1.

chanhvinh.com

33.2.22 Horizontal Scale Up Initial Phase Register (SCL0_US6)

Bit:	31	30	29	28	27	26	25	24	23	22	21	20	19	18	17	16
	—	—	—	RES_US_H_INTERPOTYP	RES_US_HT_INIPHASE[11:0]											
Initial value:	0	0	0	1	0	0	0	0	0	0	0	0	0	0	0	0
R/W:	R	R	R	R/W	R/W	R/W	R/W	R/W	R/W	R/W	R/W	R/W	R/W	R/W	R/W	R/W

Bit:	15	14	13	12	11	10	9	8	7	6	5	4	3	2	1	0
	—	—	—	—	RES_US_HB_INIPHASE[11:0]											
Initial value:	0	0	0	0	0	0	0	0	0	0	0	0	0	0	0	0
R/W:	R	R	R	R	R/W	R/W	R/W	R/W	R/W	R/W	R/W	R/W	R/W	R/W	R/W	R/W

Bit	Bit Name	Initial Value	R/W	Description
31 to 29	—	All 0	R	Reserved These bits are always read as 0. The write value should always be 0.
28	RES_US_H_INTERPOTYP	1	R/W	Horizontal Interpolation Mode Select 0: Hold interpolation 1: Linear interpolation
27 to 16	RES_US_HT_INIPHASE[11:0]	0	R/W	Horizontal Interpolation Start Phase for Top Field 0 to 4095 (0 to approx.1.0)
15 to 12	—	All 0	R	Reserved These bits are always read as 0. The write value should always be 0.
11 to 0	RES_US_HB_INIPHASE[11:0]	0	R/W	Horizontal Interpolation Start Phase for Bottom Field 0 to 4095 (0 to approx.1.0)

Note: This register is updated when the SCL0_VEN_B bit in the SCL0 register update control register (SCL0_UPDATE) is 1.

chanhvinh.com

33.2.23 Trimming Register (SCL0_US7)

Bit:	31	30	29	28	27	26	25	24	23	22	21	20	19	18	17	16
	—	—	—	—	—	—	—	—	—	—	—	—	—	—	—	—
Initial value:	0	0	0	0	0	0	0	0	0	0	0	0	0	0	0	0
R/W:	R	R	R	R	R	R	R	R	R	R	R	R	R	R	R	R

Bit:	15	14	13	12	11	10	9	8	7	6	5	4	3	2	1	0
	RES_HCUT[7:0]								RES_VCUT[7:0]							
Initial value:	0	0	0	0	0	0	0	0	0	0	0	0	0	0	0	0
R/W:	R/W	R/W	R/W	R/W	R/W	R/W	R/W	R/W	R/W	R/W	R/W	R/W	R/W	R/W	R/W	R/W

Bit	Bit Name	Initial Value	R/W	Description
31 to 16	—	All 0	R	Reserved These bits are always read as 0. The write value should always be 0.
15 to 8	RES_HCUT [7:0]	0	R/W	Horizontal Amount of Cut-off Post-Scaling Image (Right and Left Parts) Sets the number of pixel-clock cycles.
7 to 0	RES_VCUT [7:0]	0	R/W	Vertical Amount of Cut-off Post-Scaling Image (Upper and Lower Parts) Sets the number of lines.

Note: This register is updated when the SCL0_VEN_B bit in the SCL0 register update control register (SCL0_UPDATE) is 1.

chanhvinh.com

33.2.24 Frame Buffer Read Select Register (SCL0_US8)

Bit:	31	30	29	28	27	26	25	24	23	22	21	20	19	18	17	16
	—	—	—	—	—	—	—	—	—	—	—	—	—	—	—	—
Initial value:	0	0	0	0	0	0	0	0	0	0	0	0	0	0	0	0
R/W:	R	R	R	R	R	R	R	R	R	R	R	R	R	R	R	R

Bit:	15	14	13	12	11	10	9	8	7	6	5	4	3	2	1	0
	—	—	—	—	—	—	—	—	—	—	—	RES_IBUS_SYNC_SEL	—	—	—	RES_DISP_ON
Initial value:	0	0	0	0	0	0	0	0	0	0	0	0	0	0	0	0
R/W:	R	R	R	R	R	R	R	R	R	R	R	R/W	R	R	R	R/W

Bit	Bit Name	Initial Value	R/W	Description
31 to 5	—	All 0	R	Reserved These bits are always read as 0. The write value should always be 0.
4	RES_IBUS_SYNC_SEL	0	R/W	Sync Signal Select for Frame Buffer Read Block 0: Sync signals from the scaling-up control block 1: Sync signals from the graphics processing block
3 to 1	—	All 0	R	Reserved These bits are always read as 0. The write value should always be 0.
0	RES_DISP_ON	0	R/W	Post-Scaling Image Frame Display On/Off 0: Frame display on 1: Frame display off

Note: RES_IBUS_SYNC_SEL is updated when the values of the SCL0_VEN_B and SCL0_VEN_D bits in the SCL0 register update control register (SCL0_UPDATE) are both 1. RES_DISP_ON is updated when the value of the SCL0_VEN_D bit in the SCL0 register update control register (SCL0_UPDATE) is 1.

chanhvinh.com

33.2.25 Background Color Register (SCL0_OVR1)

Bit:	31	30	29	28	27	26	25	24	23	22	21	20	19	18	17	16
	—	—	—	—	—	—	—	—	RES_BK_COL_R[7:0]							
Initial value:	0	0	0	0	0	0	0	0	1	0	0	0	0	0	0	0
R/W:	R	R	R	R	R	R	R	R	R/W	R/W	R/W	R/W	R/W	R/W	R/W	R/W

Bit:	15	14	13	12	11	10	9	8	7	6	5	4	3	2	1	0
	RES_BK_COL_G[7:0]								RES_BK_COL_B[7:0]							
Initial value:	0	0	0	0	0	0	0	0	1	0	0	0	0	0	0	0
R/W:	R/W	R/W	R/W	R/W	R/W	R/W	R/W	R/W	R/W	R/W	R/W	R/W	R/W	R/W	R/W	R/W

Bit	Bit Name	Initial Value	R/W	Description
31 to 24	—	All 0	R	Reserved These bits are always read as 0. The write value should always be 0.
23 to 16	RES_BK_ CLO_R[7:0]	128	R/W	Background Color Setting R/Cr Signal R: 8 bits; unsigned (0 to 255 [LSB]) Cr: 8 bits; 128 offset binary; unsigned (0 to 255 [LSB])
15 to 8	RES_BK_ COL_G[7:0]	0	R/W	Background Color Setting G/Y Signal G/Y: 8 bits; unsigned (0 to 255 [LSB])
7 to 0	RES_BK_ COL_B[7:0]	128	R/W	Background Color Setting B/Cb Signal B: 8 bits; unsigned (0 to 255 [LSB]) Cb: 8 bits; 128 offset binary; unsigned (0 to 255 [LSB])

Note: This register is updated when the SCL0_VEN_B bit in the SCL0 register update control register (SCL0_UPDATE) is 1.

chanhvinh.com

33.2.26 SCL1 Register Update Control Register (SCL1_UPDATE)

Bit:	31	30	29	28	27	26	25	24	23	22	21	20	19	18	17	16
	—	—	—	—	—	—	—	—	—	—	—	—	—	—	—	—
Initial value:	0	0	0	0	0	0	0	0	0	0	0	0	0	0	0	0
R/W:	R	R	R	R	R	R	R	R	R	R	R	R	R	R	R	R

Bit:	15	14	13	12	11	10	9	8	7	6	5	4	3	2	1	0
	—	—	—	—	—	—	—	—	—	—	—	SCL1_VEN_B	—	—	—	SCL1_VEN_A
Initial value:	0	0	0	0	0	0	0	0	0	0	0	0	0	0	0	0
R/W:	R	R	R	R	R	R	R	R	R	R	R	R/WC1	R	R	R	R/WC1

Bit	Bit Name	Initial Value	R/W	Description
31 to 5	—	All 0	R	Reserved These bits are always read as 0. The write value should always be 0.
4	SCL1_VEN_B	0	R/WC1	Frame Buffer Write Control Register Update 0: Registers are not updated. 1: Registers are updated at the rising edge of the Vsync.
3 to 1	—	All 0	R	Reserved These bits are always read as 0. The write value should always be 0.
0	SCL1_VEN_A	0	R/WC1	Frame Buffer Write Control Register Update 0: Registers are not updated. 1: Registers are updated at the rising edge of the Vsync.

chanhvinh.com

33.2.27 Writing Mode Register (SCL1_WR1)

Bit:	31	30	29	28	27	26	25	24	23	22	21	20	19	18	17	16
	—	—	—	—	—	—	—	—	—	—	—	—	—	—	—	—
Initial value:	0	0	0	0	0	0	0	0	0	0	0	0	0	0	0	0
R/W:	R	R	R	R	R	R	R	R	R	R	R	R	R	R	R	R

Bit:	15	14	13	12	11	10	9	8	7	6	5	4	3	2	1	0
	—	—	—	—	—	—	—	—	—	RES_DS_WR_MD[2:0]			RES_MD[1:0]		RES_LOOP	RES_BST_MD
Initial value:	0	0	0	0	0	0	0	0	0	0	0	0	0	0	0	0
R/W:	R	R	R	R	R	R	R	R	R	R/W	R/W	R/W	R/W	R/W	R/W	R/W

Bit	Bit Name	Initial Value	R/W	Description
31 to 7	—	All 0	R	Reserved These bits are always read as 0. The write value should always be 0.
6 to 4	RES_DS_WR_MD [2:0]	0	R/W	Frame Buffer Writing Mode for Image Processing 0: Normal 1: Horizontal mirroring 2: 90° rotation 3: 180° rotation 4: 270° rotation 5 to 7: Setting prohibited
3, 2	RES_MD [1:0]	0	R/W	Frame Buffer Video-Signal Writing Format 0: YCbCr422 (16 bits) 1: RGB565 (16 bits) 2: RGB888 (24 (32) bits) 3: Setting prohibited
1	RES_LOOP	0	R/W	Frame Buffer Write Mode Select 0: Frame mode 1: Line mode (read as ring buffer)
0	RES_BST_MD	0	R/W	Transfer Burst Length for Frame Buffer Writing 0: 32-byte transfer (4 bursts) 1: 128-byte transfer (16 bursts)

Note: RES_LOOP and RES_BST_MD are updated when the SCL1_VEN_B bit in the SCL1 register update control register (SCL1_UPDATE) is 1.

RES_DS_WR_MD and RES_MD are updated when the SCL1_VEN_A and SCL1_VEN_B bits in the SCL1 register update control register (SCL1_UPDATE) are 1.

chanhvinh.com

33.2.28 Write Address Register 1 (SCL1_WR2)

Bit:	31	30	29	28	27	26	25	24	23	22	21	20	19	18	17	16
	RES_BASE[31:16]															
Initial value:	0	0	0	0	0	0	0	0	0	0	0	0	0	0	0	0
R/W:	R/W	R/W	R/W	R/W	R/W	R/W	R/W	R/W	R/W	R/W	R/W	R/W	R/W	R/W	R/W	R/W

Bit:	15	14	13	12	11	10	9	8	7	6	5	4	3	2	1	0
	RES_BASE[15:0]															
Initial value:	0	0	0	0	0	0	0	0	0	0	0	0	0	0	0	0
R/W:	R/W	R/W	R/W	R/W	R/W	R/W	R/W	R/W	R/W	R/W	R/W	R/W	R/W	R/W	R/W	R/W

Bit	Bit Name	Initial Value	R/W	Description
31 to 0	RES_BASE [31:0]	0	R/W	Frame Buffer Base Address Sets the start address of the frame buffer where frame data is to be stored. For 32-byte transfer: The lower five bits should be fixed to 0 0000. For 128-byte transfer: The lower seven bits should be fixed to 000 0000.

Note: This register is updated when the SCL1_VEN_B bit in the SCL1 register update control register (SCL1_UPDATE) is 1.

chanhvinh.com

33.2.29 Write Address Register 2 (SCL1_WR3)

Bit:	31	30	29	28	27	26	25	24	23	22	21	20	19	18	17	16
	—	RES_LN_OFF[14:0]														
Initial value:	0	0	0	0	1	0	0	0	0	0	0	0	0	0	0	0
R/W:	R	R/W	R/W	R/W	R/W	R/W	R/W	R/W	R/W	R/W	R/W	R/W	R/W	R/W	R/W	R/W

Bit:	15	14	13	12	11	10	9	8	7	6	5	4	3	2	1	0
	—	—	—	—	—	—	RES_FLM_NUM[9:0]									
Initial value:	0	0	0	0	0	0	0	0	0	0	0	0	0	0	0	1
R/W:	R	R	R	R	R	R	R/W	R/W	R/W	R/W	R/W	R/W	R/W	R/W	R/W	R/W

Bit	Bit Name	Initial Value	R/W	Description
31	—	0	R	Reserved This bit is always read as 0. The write value should always be 0.
30 to 16	RES_LN_OFF[14:0]	2048	R/W	Frame Buffer Line Offset Address Sets the line offset address for calculating the start address of each line. Line 0: RES_BASE Line 1: RES_BASE + RES_LN_OFF × 1 : Line n: RES_BASE + RES_LN_OFF × n For 32-byte transfer: The lower five bits should be fixed to 0 0000. For 128-byte transfer: The lower seven bits should be fixed to 000 0000.
15 to 10	—	All 0	R	Reserved These bits are always read as 0. The write value should always be 0.
9 to 0	RES_FLM_NUM[9:0]	1	R/W	Number of Frames of Buffer to be Written to Number of frames defined by RES_FLM_NUM + 1 are used. For normal image display: 0 or 1 (one or two planes) For horizontal mirror image display: 0 or 1 (one or two planes) For rotated image display: 1 (2 planes) For video recording: the number of frames to be stored − 1

chanhvinh.com

Note: This register is updated when the SCL1_VEN_B bit in the SCL1 register update control register (SCL1_UPDATE) is 1.

chanhvinh.com
chanhvinh.com
chanhvinh.com
chanhvinh.com

chanhvinh.com

33.2.30 Write Address Register 3 (SCL1_WR4)

Bit:	31	30	29	28	27	26	25	24	23	22	21	20	19	18	17	16
	—	—	—	—	—	—	—	—	—	RES_FLM_OFF[22:16]						
Initial value:	0	0	0	0	0	0	0	0	0	0	0	0	1	0	0	0
R/W:	R	R	R	R	R	R	R	R	R	R/W	R/W	R/W	R/W	R/W	R/W	R/W

Bit:	15	14	13	12	11	10	9	8	7	6	5	4	3	2	1	0
	RES_FLM_OFF[15:0]															
Initial value:	0	0	0	0	0	0	0	0	0	0	0	0	0	0	0	0
R/W:	R/W	R/W	R/W	R/W	R/W	R/W	R/W	R/W	R/W	R/W	R/W	R/W	R/W	R/W	R/W	R/W

Bit	Bit Name	Initial Value	R/W	Description
31 to 23	—	All 0	R	Reserved These bits are always read as 0. The write value should always be 0.
22 to 0	RES_FLM_OFF[22:0]	524288	R/W	Frame Buffer Frame Offset Address Sets the frame offset address for calculating the start address of each frame. Buffer 0: RES_BASE Buffer 1: RES_BASE + RES_FLM_OFF × 1 : Buffer n: RES_BASE + RES_FLM_OFF × n For 32-byte transfer: The lower five bits should be fixed to 0 0000. For 128-byte transfer: The lower seven bits should be fixed to 000 0000.

Note: This register is updated when the SCL1_VEN_B bit in the SCL1 register update control register (SCL1_UPDATE) is 1.

chanhvinh.com

33.2.31 Frame Sub-Sampling Register (SCL1_WR5)

Bit:	31	30	29	28	27	26	25	24	23	22	21	20	19	18	17	16
	—	—	—	—	—	—	—	—	—	—	—	—	—	—	—	—
Initial value:	0	0	0	0	0	0	0	0	0	0	0	0	0	0	0	0
R/W:	R	R	R	R	R	R	R	R	R	R	R	R	R	R	R	R

Bit:	15	14	13	12	11	10	9	8	7	6	5	4	3	2	1	0
	—	—	—	RES_ INTER	—	—	RES_FS_ RATE[1:0]		—	—	—	RES_ FLD_SEL	—	—	—	RES_ WENB
Initial value:	0	0	0	1	0	0	0	0	0	0	0	0	0	0	0	0
R/W:	R	R	R	R/W	R	R	R/W	R/W	R	R	R	R/W	R	R	R	R/W

Bit	Bit Name	Initial Value	R/W	Description
31 to 13	—	All 0	R	Reserved These bits are always read as 0. The write value should always be 0.
12	RES_ INTER	1	R/W	Field Operating Mode Select 0: Progressive 1: Interlace
11, 10	—	All 0	R	Reserved These bits are always read as 0. The write value should always be 0.
9, 8	RES_FS_ RATE[1:0]	0	R/W	Writing Rate Sets the frame buffer writing rate to the vertical frequency of the input signal. 0: 1/1 an input signal (The RES_FLD_SEL setting is invalid.) 1: 1/2 an input signal 2: 1/4 an input signal 3: 1/8 an input signal
7 to 5	—	All 0	R	Reserved These bits are always read as 0. The write value should always be 0.

chanhvinh.com

Bit	Bit Name	Initial Value	R/W	Description
4	RES_FLD_SEL	0	R/W	Write Field Select 0: Top field 1: Bottom field
3 to 1	—	All 0	R	Reserved These bits are always read as 0. The write value should always be 0.
0	RES_WENB	0	R/W	Frame Buffer Write Enable 0: Frame buffer writing is disabled. 1: Frame buffer writing is enabled.

Note: This register is updated when the SCL1_VEN_A bit in the SCL1 register update control register (SCL1_UPDATE) is 1.

chanhvinh.com

33.2.32 Bit Reduction Register (SCL1_WR6)

Bit:	31	30	29	28	27	26	25	24	23	22	21	20	19	18	17	16
	—	—	—	—	—	—	—	—	—	—	—	—	—	—	—	—
Initial value:	0	0	0	0	0	0	0	0	0	0	0	0	0	0	0	0
R/W:	R	R	R	R	R	R	R	R	R	R	R	R	R	R	R	R

Bit:	15	14	13	12	11	10	9	8	7	6	5	4	3	2	1	0
	—	—	—	—	—	—	—	—	—	—	—	RES_DTH_ON	—	—	—	RES_BITDEC_ON
Initial value:	0	0	0	0	0	0	0	0	0	0	0	0	0	0	0	0
R/W:	R	R	R	R	R	R	R	R	R	R	R	R/W	R	R	R	R/W

Bit	Bit Name	Initial Value	R/W	Description
31 to 5	—	All 0	R	Reserved These bits are always read as 0. The write value should always be 0.
4	RES_DTH_ON	0	R/W	Dither Correction On/Off 0: Off (rounded off) 1: On (2 × 2 dither pattern)
3 to 1	—	All 0	R	Reserved These bits are always read as 0. The write value should always be 0.
0	RES_BITDEC_ON	0	R/W	Bit Reduction On/Off 0: Off 1: On

Note: This register is updated when the SCL1_VEN_A bit in the SCL1 register update control register (SCL1_UPDATE) is 1.

chanhvinh.com

33.2.33 Write Detection Register (SCL1_WR7)

Bit:	31	30	29	28	27	26	25	24	23	22	21	20	19	18	17	16
	—	—	—	—	—	—	—	—	—	—	—	—	—	—	—	RES_OVERFLOW
Initial value:	0	0	0	0	0	0	0	0	0	0	0	0	0	0	0	0
R/W:	R	R	R	R	R	R	R	R	R	R	R	R	R	R	R	R

Bit:	15	14	13	12	11	10	9	8	7	6	5	4	3	2	1	0
	—	—	—	—	—	—	RES_FLM_CNT[9:0]									
Initial value:	0	0	0	0	0	0	0	0	0	0	0	0	0	0	0	0
R/W:	R	R	R	R	R	R	R	R	R	R	R	R	R	R	R	R

Bit	Bit Name	Initial Value	R/W	Description
31 to 17	—	All 0	R	Reserved These bits are always read as 0. The write value should always be 0.
16	RES_OVERFLOW	0	R	Line Buffer Overflow Detect 1: Line buffer has overflowed. 0: Line buffer has not overflowed.
15 to 10	—	All 0	R	Reserved These bits are always read as 0. The write value should always be 0.
9 to 0	RES_FLM_CNT[9:0]	0	R	Frame Number of Frame Being Accessed

chanhvinh.com

33.2.34 Graphics 1 Register Update Control Register (GR1_UPDATE)

Bit:	31	30	29	28	27	26	25	24	23	22	21	20	19	18	17	16
	—	—	—	—	—	—	—	—	—	—	—	—	—	—	—	—
Initial value:	0	0	0	0	0	0	0	0	0	0	0	0	0	0	0	0
R/W:	R	R	R	R	R	R	R	R	R	R	R	R	R	R	R	R

Bit:	15	14	13	12	11	10	9	8	7	6	5	4	3	2	1	0
	—	—	—	—	—	—	—	—	—	—	—	GR1_P_VEN	—	—	—	GR1_IBUS_VEN
Initial value:	0	0	0	0	0	0	0	0	0	0	0	0	0	0	0	0
R/W:	R	R	R	R	R	R	R	R	R	R	R	R/WC1	R	R	R	R/WC1

Bit	Bit Name	Initial Value	R/W	Description
31 to 5	—	All 0	R	Reserved These bits are always read as 0. The write value should always be 0.
4	GR1_P_VEN	0	R/WC1	Graphics Display Register Update 0: Registers are not updated. 1: Registers are updated at the rising edge of the Vsync.
3 to 1	—	All 0	R	Reserved These bits are always read as 0. The write value should always be 0.
0	GR1_IBUS_VEN	0	R/WC1	Frame Buffer Read Control Register Update 0: Registers are not updated. 1: Registers are updated at the rising edge of the Vsync.

chanhvinh.com

33.2.35 Frame Buffer Read Control Register (Graphics 1) (GR1_FLM_RD)

Bit:	31	30	29	28	27	26	25	24	23	22	21	20	19	18	17	16
	—	—	—	—	—	—	—	—	—	—	—	—	—	—	—	—
Initial value:	0	0	0	0	0	0	0	0	0	0	0	0	0	0	0	0
R/W:	R	R	R	R	R	R	R	R	R	R	R	R	R	R	R	R

Bit:	15	14	13	12	11	10	9	8	7	6	5	4	3	2	1	0
	—	—	—	—	—	—	—	—	—	—	—	—	—	—	—	GR1_R_ENB
Initial value:	0	0	0	0	0	0	0	0	0	0	0	0	0	0	0	0
R/W:	R	R	R	R	R	R	R	R	R	R	R	R	R	R	R	R/W

Bit	Bit Name	Initial Value	R/W	Description
31 to 1	—	All 0	R	Reserved These bits are always read as 0. The write value should always be 0.
0	GR1_R_ENB	0	R/W	Frame Buffer Read Enable 0: Frame buffer reading is disabled. 1: Frame buffer reading is enabled.

Note: This register is updated when the GR1_IBUS_VEN bit in the graphics 1 register update control register (GR1_UPDATE) is 1.

chanhvinh.com

33.2.36 Frame Buffer Control Register 1 (Graphics 1) (GR1_FLM1)

Bit:	31	30	29	28	27	26	25	24	23	22	21	20	19	18	17	16
	—	—	—	—	—	—	—	—	—	—	—	—	—	—	—	GR1_LN_OFF_DIR
Initial value:	0	0	0	0	0	0	0	0	0	0	0	0	0	0	0	0
R/W:	R	R	R	R	R	R	R	R	R	R	R	R	R	R	R	R/W

Bit:	15	14	13	12	11	10	9	8	7	6	5	4	3	2	1	0
	—	—	—	—	—	—	GR1_FLM_SEL[1:0]		—	—	—	GR1_IMR_FLM_INV	—	—	—	GR1_BST_MD
Initial value:	0	0	0	0	0	0	0	0	0	0	0	0	0	0	0	0
R/W:	R	R	R	R	R	R	R/W	R/W	R	R	R	R/W	R	R	R	R/W

Bit	Bit Name	Initial Value	R/W	Description
31 to 17	—	All 0	R	Reserved These bits are always read as 0. The write value should always be 0.
16	GR1_LN_OFF_DIR	0	R/W	Selects the line offset address direction of the frame buffer. 0: Increments the address by the line offset address. 1: Decrements the address by the line offset address.
15 to 10	—	All 0	R	Reserved These bits are always read as 0. The write value should always be 0.
9, 8	GR1_FLM_SEL[1:0]	0	R/W	Selects a frame buffer address setting signal. 0: Links to scaling-down process. 1: Selects GR1_FLM_NUM. 2: Links to distortion correction. 3: Setting prohibited
7 to 5	—	All 0	R	Reserved These bits are always read as 0. The write value should always be 0.
4	GR1_IMR_FLM_INV	0	R/W	Sets the frame buffer number for distortion correction. 0: Does not replace the numbers of the frames to be read. 1: Replaces the numbers of the frames to be read.

chanhvinh.com

Bit	Bit Name	Initial Value	R/W	Description
3 to 1	—	All 0	R	Reserved These bits are always read as 0. The write value should always be 0.
0	GR1_BST_MD	0	R/W	Frame Buffer Burst Transfer Mode 0: 32-byte transfer 1: 128- byte transfer

Note: GR1_LN_OFF_DIR, GR1_FLM_SEL, and GR1_IMR_FLM_INV are updated when the GR1_IBUS_VEN bit in the graphics 1 register update control register (GR1_UPDATE) is 1.

GR1_BST_MD is updated when the GR1_IBUS_VEN and GR1_P_VEN bits in the graphics 1 register update control register (GR1_UPDATE) are 1.

chanhvinh.com

33.2.37 Frame Buffer Control Register 2 (Graphics 1) (GR1_FLM2)

Bit:	31	30	29	28	27	26	25	24	23	22	21	20	19	18	17	16
	GR1_BASE[31:16]															
Initial value:	0	0	0	0	0	0	0	0	0	0	0	0	0	0	0	0
R/W:	R/W	R/W	R/W	R/W	R/W	R/W	R/W	R/W	R/W	R/W	R/W	R/W	R/W	R/W	R/W	R/W

Bit:	15	14	13	12	11	10	9	8	7	6	5	4	3	2	1	0
	GR1_BASE[15:0]															
Initial value:	0	0	0	0	0	0	0	0	0	0	0	0	0	0	0	0
R/W:	R/W	R/W	R/W	R/W	R/W	R/W	R/W	R/W	R/W	R/W	R/W	R/W	R/W	R/W	R/W	R/W

Bit	Bit Name	Initial Value	R/W	Description
31 to 0	GR1_BASE [31:0]	0	R/W	Frame Buffer Base Address Sets the start address of the frame buffer where frame data is to be stored. GR_BASE[4:3] and GR_BASE[6:3] are referred to during 32-byte burst transfer and 128-byte burst transfer, respectively, to skip the start line data. The lower three bits should be fixed to 000.

Note: This register is updated when the GR1_IBUS_VEN and GR1_P_VEN bits in the graphics 1 register update control register (GR1_UPDATE) are 1.

chanhvinh.com

33.2.38 Frame Buffer Control Register 3 (Graphics 1) (GR1_FLM3)

Bit:	31	30	29	28	27	26	25	24	23	22	21	20	19	18	17	16
	—	GR1_LN_OFF[14:0]														
Initial value:	0	0	0	0	1	0	0	0	0	0	0	0	0	0	0	0
R/W:	R	R/W	R/W	R/W	R/W	R/W	R/W	R/W	R/W	R/W	R/W	R/W	R/W	R/W	R/W	R/W

Bit:	15	14	13	12	11	10	9	8	7	6	5	4	3	2	1	0
	—	—	—	—	—	—	GR1_FLM_NUM[9:0]									
Initial value:	0	0	0	0	0	0	0	0	0	0	0	0	0	0	0	1
R/W:	R	R	R	R	R	R	R/W	R/W	R/W	R/W	R/W	R/W	R/W	R/W	R/W	R/W

Bit	Bit Name	Initial Value	R/W	Description
31	—	0	R	Reserved This bit is always read as 0. The write value should always be 0.
30 to 16	GR1_LN_OFF[14:0]	2048	R/W	Frame Buffer Line Offset Address Sets the line offset address for calculating the start address of each line. Line 0:GR1_BASE Line 1:GR1_BASE + GR1_LN_OFF × 1 : Line n: GR1_BASE + GR1_LN_OFF × n For 32-byte transfer: The lower five bits should be fixed to 0 0000. For 128-byte transfer: The lower seven bits should be fixed to 000 0000.
15 to 10	—	All 0	R	Reserved These bits are always read as 0. The write value should always be 0.
9 to 0	GR1_FLM_NUM[9:0]	1	R/W	Frame Number of Frame Buffer Manually set the frame number when GR1_FLM_SEL = 1.

Note: This register is updated when the GR1_IBUS_VEN bit in the graphics 1 register update control register (GR1_UPDATE) is 1.

chanhvinh.com

33.2.39 Frame Buffer Control Register 4 (Graphics 1) (GR1_FLM4)

Bit:	31	30	29	28	27	26	25	24	23	22	21	20	19	18	17	16
	—	—	—	—	—	—	—	—	—	GR1_FLM_OFF[22:16]						
Initial value:	0	0	0	0	0	0	0	0	0	0	0	0	1	0	0	0
R/W:	R	R	R	R	R	R	R	R	R	R/W	R/W	R/W	R/W	R/W	R/W	R/W

Bit:	15	14	13	12	11	10	9	8	7	6	5	4	3	2	1	0
	GR1_FLM_OFF[15:0]															
Initial value:	0	0	0	0	0	0	0	0	0	0	0	0	0	0	0	0
R/W:	R/W	R/W	R/W	R/W	R/W	R/W	R/W	R/W	R/W	R/W	R/W	R/W	R/W	R/W	R/W	R/W

Bit	Bit Name	Initial Value	R/W	Description
31 to 23	—	All 0	R	Reserved These bits are always read as 0. The write value should always be 0.
22 to 0	GR1_FLM_OFF[22:0]	524288	R/W	Frame Buffer Frame Offset Address Specifies the frame offset address used for calculating the start address of each frame buffer when more than one buffer is used. Buffer 0: GR1_BASE Buffer 1: GR1_BASE + GR1_FLM_OFF × 1 : Buffer n: GR1_BASE + GR1_FLM_OFF × n For 32-byte transfer: The lower five bits should be fixed to 0 0000. For 128-byte transfer: The lower seven bits should be fixed to 000 0000.

Note: This register is updated when the GR1_IBUS_VEN bit in the graphics 1 register update control register (GR1_UPDATE) is 1.

chanhvinh.com

33.2.40 Frame Buffer Control Register 5 (Graphics 1) (GR1_FLM5)

Bit:	31	30	29	28	27	26	25	24	23	22	21	20	19	18	17	16
	—	—	—	—	—	—	GR1_FLM_LNUM[9:0]									
Initial value:	0	0	0	0	0	0	0	0	0	0	0	0	0	0	0	0
R/W:	R	R	R	R	R	R	R/W	R/W	R/W	R/W	R/W	R/W	R/W	R/W	R/W	R/W

Bit:	15	14	13	12	11	10	9	8	7	6	5	4	3	2	1	0
	—	—	—	—	—	—	GR1_FLM_LOOP[9:0]									
Initial value:	0	0	0	0	0	0	1	1	1	1	1	1	1	1	1	1
R/W:	R	R	R	R	R	R	R/W	R/W	R/W	R/W	R/W	R/W	R/W	R/W	R/W	R/W

Bit	Bit Name	Initial Value	R/W	Description
31 to 26	—	All 0	R	Reserved These bits are always read as 0. The write value should always be 0.
25 to 16	GR1_FLM_LNUM[9:0]	0	R/W	Sets number of lines in a frame Number of lines is (GR1_FLM_LNUM + 1).
15 to 10	—	All 0	R	Reserved These bits are always read as 0. The write value should always be 0.
9 to 0	GR1_FLM_LOOP[9:0]	1023	R/W	Number of lines when reading the addresses repeatedly by returning to the start address after reaching the end address. (GR1_FLM_LOOP + 1) lines are read.

Note: This register is updated when the GR1_IBUS_VEN bit in the graphics 1 register update control register (GR1_UPDATE) is 1.

chanhvinh.com

33.2.41 Frame Buffer Control Register 6 (Graphics 1) (GR1_FLM6)

Bit:	31	30	29	28	27	26	25	24	23	22	21	20	19	18	17	16
	GR1_FORMAT[3:0]				—	—	GR1_HW[9:0]									
Initial value:	1	0	0	0	0	0	0	0	0	0	0	0	0	0	0	0
R/W:	R/W	R/W	R/W	R/W	R	R	R/W	R/W	R/W	R/W	R/W	R/W	R/W	R/W	R/W	R/W

Bit:	15	14	13	12	11	10	9	8	7	6	5	4	3	2	1	0
	GR1_YCC_SWAP[2:0]			GR1_ENDIAN_ON	—	—	—	GR1_CNV444_MD	—	—	GR1_STA_POS[5:0]					
Initial value:	0	0	0	0	0	0	0	0	0	0	0	0	0	0	0	0
R/W:	R/W	R/W	R/W	R/W	R	R	R	R/W	R	R	R/W	R/W	R/W	R/W	R/W	R/W

Bit	Bit Name	Initial Value	R/W	Description
31 to 28	GR1_FORMAT [3:0]	8	R/W	Sets the format of the frame buffer read signal. 0: RGB565 1: RGB888 2: αRGB1555 3: αRGB4444 4: αRGB8888 5: CLUT8 6: CLUT4 7: CLUT1 8: YCbCr422 9 to 15: Setting prohibited
27, 26	—	All 0	R	Reserved These bits are always read as 0. The write value should always be 0.
25 to 16	GR1_HW [9:0]	0	R/W	Sets the width of the horizontal valid period. The width is (GR1_HW + 1) pixels. Note: The set value should be equal to or more than two.

chanhvinh.com

Bit	Bit Name	Initial Value	R/W	Description
15 to 13	GR1_YCC_SWAP[2:0]	0	R/W	Controls swapping of data read from buffer in the YCbCr422 format. Valid only when GR1_ENDIAN_ON = 1. 0: Cb/Y0/Cr/Y1 1: Y0/Cb/Y1/Cr 2: Cr/Y0/Cb/Y1 3: Y0/Cr/Y1/Cb 4: Y1/Cr/Y0/Cb 5: Cr/Y1/Cb/Y0 6: Y1/Cb/Y0/Cr 7: Cb/Y1/Cr/Y0
12	GR1_ENDIAN_ON	0	R/W	Turns on/off the endian control of data read from buffer. 0: Off 1: On
11 to 9	—	All 0	R	Reserved These bits are always read as 0. The write value should always be 0.
8	GR1_CNV444_MD	0	R/W	Sets the interpolation mode for YCbCr422 to YCbCr444 conversion. 0: Hold interpolation 1: Average interpolation
7, 6	—	All 0	R	Reserved These bits are always read as 0. The write value should always be 0.
5 to 0	GR1_STA_POS[5:0]	0	R/W	Sets the amount of data to be skipped through. Specifically data amount equal to the amount indicated by GR1_STA_POS is skipped from the start of the line.

Note: GR1_YCC_SWAP, GR1_ENDIAN_ON, GR1_CNV444, and GR1_STA_POS are updated when GR1_P_VEN bit in the graphics 1 register update control register (GR1_UPDATE) is 1.

GR1_FORMAT and GR1_HW are updated when GR1_IBUS_VEN and GR1_P_VEN bits in the graphics 1 register update control register (GR1_UPDATE) are 1.

chanhvinh.com

33.2.42 Alpha Blending Control Register 1 (Graphics 1) (GR1_AB1)

Bit:	31	30	29	28	27	26	25	24	23	22	21	20	19	18	17	16
	—	—	—	—	—	—	—	—	—	—	—	—	—	—	—	—
Initial value:	0	0	0	0	0	0	0	0	0	0	0	0	0	0	0	0
R/W:	R	R	R	R	R	R	R	R	R	R	R	R	R	R	R	R

Bit:	15	14	13	12	11	10	9	8	7	6	5	4	3	2	1	0
	—	—	—	—	—	—	—	—	—	—	—	GR1_GRC_DISP_ON	—	—	GR1_DISP_SEL[1:0]	
Initial value:	0	0	0	0	0	0	0	0	0	0	0	0	0	0	0	0
R/W:	R	R	R	R	R	R	R	R	R	R	R	R/W	R	R	R/W	R/W

Bit	Bit Name	Initial Value	R/W	Description
31 to 5	—	All 0	R	Reserved These bits are always read as 0. The write value should always be 0.
4	GR1_GRC_DISP_ON	0	R/W	Turns on/off frame-line display of the graphics image area. 0: Frame-line display off 1: Frame-line display on
3, 2	—	All 0	R	Reserved These bits are always read as 0. The write value should always be 0.
1, 0	GR1_DISP_SEL[1:0]	0	R/W	Selects the graphics display mode. 0: Background color display (GR1_BASE) 1: Lower-layer graphics display When displaying video image or enlarged graphics, select this setting. 2: Current graphics display When displaying graphics, select this setting. 3: Blended display of lower-layer graphics and current graphics* Note: * Select this setting whenever chroma-key processing is to proceed. Since only current graphics are to be displayed by chroma-key processing, set the α values for both pixels to be subject to chroma-keying and pixels not to be subject to chroma-keying to 255.

chanhvinh.com

Note: This register is updated when GR1_P_VEN bit in the graphics 1 register update control register (GR1_UPDATE) is 1.

chanhvinh.com chanhvinh.com chanhvinh.com chanhvinh.com

chanhvinh.com

33.2.43 Alpha Blending Control Register 2 (Graphics 1) (GR1_AB2)

Bit:	31	30	29	28	27	26	25	24	23	22	21	20	19	18	17	16
	—	—	—	—	—	GR1_GRC_VS[10:0]										
Initial value:	0	0	0	0	0	0	0	0	0	0	0	0	0	0	0	0
R/W:	R	R	R	R	R	R/W	R/W	R/W	R/W	R/W	R/W	R/W	R/W	R/W	R/W	R/W

Bit:	15	14	13	12	11	10	9	8	7	6	5	4	3	2	1	0
	—	—	—	—	—	GR1_GRC_VW[10:0]										
Initial value:	0	0	0	0	0	0	0	0	0	0	0	0	0	0	0	0
R/W:	R	R	R	R	R	R/W	R/W	R/W	R/W	R/W	R/W	R/W	R/W	R/W	R/W	R/W

Bit	Bit Name	Initial Value	R/W	Description
31 to 27	—	All 0	R	Reserved These bits are always read as 0. The write value should always be 0.
26 to 16	GR1_GRC_VS[10:0]	0	R/W	Vertical Start Position of Graphics Image Area. Note: The set value should be four or more (lines). GR1_GRC_VS + GR1_GRC_VW should be equal to or less than 2039 (lines).
15 to 11	—	All 0	R	Reserved These bits are always read as 0. The write value should always be 0.
10 to 0	GR1_GRC_VW[10:0]	0	R/W	Vertical Width of Graphics Image Area.

Note: This register is updated when the GR1_P_VEN bit in the graphics 1 register update control register (GR1_UPDATE is 1.

chanhvinh.com

33.2.44 Alpha Blending Control Register 3 (Graphics 1) (GR1_AB3)

Bit:	31	30	29	28	27	26	25	24	23	22	21	20	19	18	17	16
	—	—	—	—	—	GR1_GRC_HS[10:0]										
Initial value:	0	0	0	0	0	0	0	0	0	0	0	0	0	0	0	0
R/W:	R	R	R	R	R	R/W	R/W	R/W	R/W	R/W	R/W	R/W	R/W	R/W	R/W	R/W

Bit:	15	14	13	12	11	10	9	8	7	6	5	4	3	2	1	0
	—	—	—	—	—	GR1_GRC_HW[10:0]										
Initial value:	0	0	0	0	0	0	0	0	0	0	0	0	0	0	0	0
R/W:	R	R	R	R	R	R/W	R/W	R/W	R/W	R/W	R/W	R/W	R/W	R/W	R/W	R/W

Bit	Bit Name	Initial Value	R/W	Description
31 to 27	—	All 0	R	Reserved These bits are always read as 0. The write value should always be 0.
26 to 16	GR1_GRC_HS[10:0]	0	R/W	Horizontal Start Position of Graphics Image Area. Note: The set value should be 16 or more (clock cycles). GR1_GRC_HS + GR1_GRC_HW should be equal to or less than 2015 (clock cycles).
15 to 11	—	All 0	R	Reserved These bits are always read as 0. The write value should always be 0.
10 to 0	GR1_GRC_HW[10:0]	0	R/W	Horizontal Width of Graphics Image Area. Note: For displaying an image with 1- or 2-pixel horizontal width, set GR1_HW to 2 and GR1_GRC_HW to 1 (1 pixel) or 2 (2 pixels).

Note: This register is updated when the GR1_P_VEN bit in the graphics 1 register update control register (GR1_UPDATE) is 1.

chanhvinh.com

33.2.45 Alpha Blending Control Register 7 (Graphics 1) (GR1_AB7)

Bit:	31	30	29	28	27	26	25	24	23	22	21	20	19	18	17	16
	—	—	—	—	—	—	—	—	—	—	—	—	—	—	—	—
Initial value:	0	0	0	0	0	0	0	0	1	1	1	1	1	1	1	1
R/W:	R	R	R	R	R	R	R	R	R	R	R	R	R	R	R	R

Bit:	15	14	13	12	11	10	9	8	7	6	5	4	3	2	1	0
	—	—	—	—	—	—	—	—	—	—	—	—	—	—	—	GR1_CK_ON
Initial value:	0	0	0	0	0	0	0	0	0	0	0	0	0	0	0	0
R/W:	R	R	R	R	R	R	R	R	R	R	R	R	R	R	R	R/W

Bit	Bit Name	Initial Value	R/W	Description
31 to 24	—	All 0	R	Reserved These bits are always read as 0. The write value should always be 0.
23 to 16	—	All 1	R	Reserved These bits are always read as 1. The write value should always be 1.
15 to 1	—	All 0	R	Reserved These bits are always read as 0. The write value should always be 0.
0	GR1_CK_ON	0	R/W	CLUT-Index/RGB-Index Chroma-Key Processing On/Off 0: Off 1: On

Note: This register is updated when the GR1_P_VEN bit in the graphics 1 register update control register (GR1_UPDATE) is 1.

chanhvinh.com

33.2.46 Alpha Blending Control Register 8 (Graphics 1) (GR1_AB8)

Bit:	31	30	29	28	27	26	25	24	23	22	21	20	19	18	17	16
	GR1_CK_KCLUT[7:0]								GR1_CK_KG[7:0]							
Initial value:	0	0	0	0	0	0	0	0	0	0	0	0	0	0	0	0
R/W:	R/W	R/W	R/W	R/W	R/W	R/W	R/W	R/W	R/W	R/W	R/W	R/W	R/W	R/W	R/W	R/W

Bit:	15	14	13	12	11	10	9	8	7	6	5	4	3	2	1	0
	GR1_CK_KB[7:0]								GR1_CK_KR[7:0]							
Initial value:	0	0	0	0	0	0	0	0	0	0	0	0	0	0	0	0
R/W:	R/W	R/W	R/W	R/W	R/W	R/W	R/W	R/W	R/W	R/W	R/W	R/W	R/W	R/W	R/W	R/W

Bit	Bit Name	Initial Value	R/W	Description
31 to 24	GR1_CK_KCLUT[7:0]	0	R/W	CLUT Signal for CLUT-Index Chroma-Key Processing CLUT: Unsigned 8 bits (0 to 255 [LSB])
23 to 16	GR1_CK_KG[7:0]	0	R/W	G Signal for RGB-Index Chroma-Key Processing G: Unsigned 8 bits (0 to 255 [LSB])
15 to 8	GR1_CK_KB[7:0]	0	R/W	B Signal for RGB-Index Chroma-Key Processing B: Unsigned 8 bits (0 to 255 [LSB])
7 to 0	GR1_CK_KR[7:0]	0	R/W	R Signal for RGB-Index Chroma-Key Processing R: Unsigned 8 bits (0 to 255 [LSB])

Note: This register is updated when the GR1_P_VEN bit in the graphics 1 register update control register (GR1_UPDATE) is 1.

chanhvinh.com

33.2.47 Alpha Blending Control Register 9 (Graphics 1) (GR1_AB9)

Bit:	31	30	29	28	27	26	25	24	23	22	21	20	19	18	17	16
	GR1_CK_A[7:0]								GR1_CK_G[7:0]							
Initial value:	0	0	0	0	0	0	0	0	0	0	0	0	0	0	0	0
R/W:	R/W	R/W	R/W	R/W	R/W	R/W	R/W	R/W	R/W	R/W	R/W	R/W	R/W	R/W	R/W	R/W

Bit:	15	14	13	12	11	10	9	8	7	6	5	4	3	2	1	0
	GR1_CK_B[7:0]								GR1_CK_R[7:0]							
Initial value:	0	0	0	0	0	0	0	0	0	0	0	0	0	0	0	0
R/W:	R/W	R/W	R/W	R/W	R/W	R/W	R/W	R/W	R/W	R/W	R/W	R/W	R/W	R/W	R/W	R/W

Bit	Bit Name	Initial Value	R/W	Description
31 to 24	GR1_CK_A [7:0]	0	R/W	Replaced Alpha Signal after RGB-Index Chroma-Key Processing α: Unsigned 8 bits (0 to 255 [LSB]) Note: These bits should always be set to 255 to display the current graphics only.
23 to 16	GR1_CK_G [7:0]	0	R/W	Replaced G Signal after RGB-Index Chroma-Key Processing G: Unsigned 8 bits (0 to 255 [LSB])
15 to 8	GR1_CK_B [7:0]	0	R/W	Replaced B Signal after RGB-Index Chroma-Key Processing B: Unsigned 8 bits (0 to 255 [LSB])
7 to 0	GR1_CK_R [7:0]	0	R/W	Replaced R Signal after RGB-Index Chroma-Key Processing R: Unsigned 8 bits (0 to 255 [LSB])

Note: This register is updated when the GR1_P_VEN bit in the graphics 1 register update control register (GR1_UPDATE) is 1.

chanhvinh.com

33.2.48 Alpha Blending Control Register 10 (Graphics 1) (GR1_AB10)

Bit:	31	30	29	28	27	26	25	24	23	22	21	20	19	18	17	16
	GR1_A0[7:0]								GR1_G0[7:0]							
Initial value:	0	0	0	0	0	0	0	0	0	0	0	0	0	0	0	0
R/W:	R/W	R/W	R/W	R/W	R/W	R/W	R/W	R/W	R/W	R/W	R/W	R/W	R/W	R/W	R/W	R/W

Bit:	15	14	13	12	11	10	9	8	7	6	5	4	3	2	1	0
	GR1_B0[7:0]								GR1_R0[7:0]							
Initial value:	0	0	0	0	0	0	0	0	0	0	0	0	0	0	0	0
R/W:	R/W	R/W	R/W	R/W	R/W	R/W	R/W	R/W	R/W	R/W	R/W	R/W	R/W	R/W	R/W	R/W

Bit	Bit Name	Initial Value	R/W	Description
31 to 24	GR1_A0 [7:0]	0	R/W	CLUT1 α0 Signal Replaced with α signal when in the CLUT1 format and CLUT1 = 0. Replaced with α signal when in the αRGB1555 format and α = 0. Note: These bits should always be set to 255 to display the current graphics only.
23 to 16	GR1_G0 [7:0]	0	R/W	CLUT1 G0 Signal Replaced with G signal when in the CLUT1 format and CLUT1 = 0.
15 to 8	GR1_B0 [7:0]	0	R/W	CLUT1 B0 Signal Replaced with B signal when in the CLUT1 format and CLUT1 = 0.
7 to 0	GR1_R0 [7:0]	0	R/W	CLUT1 R0 Signal Replaced with R signal when in the CLUT1 format and CLUT1 = 0.

Note: This register is updated when the GR1_P_VEN bit in the graphics 1 register update control register (GR1_UPDATE) is 1.

chanhvinh.com

33.2.49 Alpha Blending Control Register 11 (Graphics 1) (GR1_AB11)

Bit:	31	30	29	28	27	26	25	24	23	22	21	20	19	18	17	16
	GR1_A1[7:0]								GR1_G1[7:0]							
Initial value:	0	0	0	0	0	0	0	0	0	0	0	0	0	0	0	0
R/W:	R/W	R/W	R/W	R/W	R/W	R/W	R/W	R/W	R/W	R/W	R/W	R/W	R/W	R/W	R/W	R/W

Bit:	15	14	13	12	11	10	9	8	7	6	5	4	3	2	1	0
	GR1_B1[7:0]								GR1_R1[7:0]							
Initial value:	0	0	0	0	0	0	0	0	0	0	0	0	0	0	0	0
R/W:	R/W	R/W	R/W	R/W	R/W	R/W	R/W	R/W	R/W	R/W	R/W	R/W	R/W	R/W	R/W	R/W

Bit	Bit Name	Initial Value	R/W	Description
31 to 24	GR1_A1 [7:0]	0	R/W	CLUT1 α1 Signal Replaced with α signal when in the CLUT1 format and CLUT1 = 1. Replaced with α signal when in the αRGB1555 format and α = 1. Note: These bits should always be set to 255 to display the current graphics only.
23 to 16	GR1_G1 [7:0]	0	R/W	CLUT1 G1 Signal Replaced with G signal when in the CLUT1 format and CLUT1 = 1.
15 to 8	GR1_B1 [7:0]	0	R/W	CLUT1 B1 Signal Replaced with B signal when in the CLUT1 format and CLUT1 = 1.
7 to 0	GR1_R1 [7:0]	0	R/W	CLUT1 R1 Signal Replaced with R signal when in the CLUT1 format and CLUT1 = 1.

Note: This register is updated when the GR1_P_VEN bit in the graphics 1 register update control register (GR1_UPDATE) is 1.

chanhvinh.com

33.2.50 Background Color Control Register (Graphics 1) (GR1_BASE)

Bit:	31	30	29	28	27	26	25	24	23	22	21	20	19	18	17	16
	—	—	—	—	—	—	—	—	GR1_BASE_G[7:0]							
Initial value:	0	0	0	0	0	0	0	0	0	0	0	0	0	0	0	0
R/W:	R	R	R	R	R	R	R	R	R/W	R/W	R/W	R/W	R/W	R/W	R/W	R/W

Bit:	15	14	13	12	11	10	9	8	7	6	5	4	3	2	1	0
	GR1_BASE_B[7:0]								GR1_BASE_R[7:0]							
Initial value:	1	0	0	0	0	0	0	0	1	0	0	0	0	0	0	0
R/W:	R/W	R/W	R/W	R/W	R/W	R/W	R/W	R/W	R/W	R/W	R/W	R/W	R/W	R/W	R/W	R/W

Bit	Bit Name	Initial Value	R/W	Description
31 to 24	—	All 0	R	Reserved These bits are always read as 0. The write value should always be 0.
23 to 16	GR1_BASE_G[7:0]	0	R/W	Background Color G Signal G: Unsigned 8 bits (0 to 255 [LSB])
15 to 8	GR1_BASE_B[7:0]	128	R/W	Background Color B Signal B: Unsigned 8 bits (0 to 255 [LSB])
7 to 0	GR1_BASE_R[7:0]	128	R/W	Background Color R Signal R: Unsigned 8 bits (0 to 255 [LSB])

Note: This register is updated when the GR1_P_VEN bit in the graphics 1 register update control register (GR1_UPDATE) is 1.

chanhvinh.com

33.2.51 CLUT Table Control Register (Graphics 1) (GR1_CLUT)

Bit:	31	30	29	28	27	26	25	24	23	22	21	20	19	18	17	16
	—	—	—	—	—	—	—	—	—	—	—	—	—	—	—	GR1_CLT_SEL
Initial value:	0	0	0	0	0	0	0	0	0	0	0	0	0	0	0	0
R/W:	R	R	R	R	R	R	R	R	R	R	R	R	R	R	R	R/W

Bit:	15	14	13	12	11	10	9	8	7	6	5	4	3	2	1	0
	—	—	—	—	—	—	—	—	—	—	—	—	—	—	—	—
Initial value:	0	0	0	0	0	0	0	0	0	0	0	0	0	0	0	0
R/W:	R	R	R	R	R	R	R	R	R	R	R	R	R	R	R	R

Bit	Bit Name	Initial Value	R/W	Description
31 to 17	—	All 0	R	Reserved These bits are always read as 0. The write value should always be 0.
16	GR1_CLT_SEL	0	R/W	CLUT Table Select Signal 0: Selects CLUT table 0. Referring to the CLUT table 0 value to expand to αRGB8888 The CPU side can read-access or write-access to the CLUT table 1. 1: Selects CLUT table 1. Referring to the CLUT table 1 value to expand to αRGB8888 The CPU side can read-access or write-access to the CLUT table 0.
15 to 0	—	All 0	R	Reserved These bits are always read as 0. The write value should always be 0.

Note: This register is updated when the GR1_P_VEN bit in the graphics 1 register update control register (GR1_UPDATE) is 1.

chanhvinh.com

33.3 Usage Method

33.3.1 Scaling Setting Example for Displaying Input Video Image

(1) Angles of View for Input and Output

This section describes an example of setting the signals of the input and output angles of view shown in table 33.37.

Here, the over-scan rate is assumed to be 100%.

Table 33.37 Input and Output Angles for Displaying Input Video Image

Input Signal	Output Signal	Signal Format	Rotation	Buffer Planes	Scaling Filter
1440 × 240	240 × 320	YCbCr	Normal	Two planes	2-tap linear

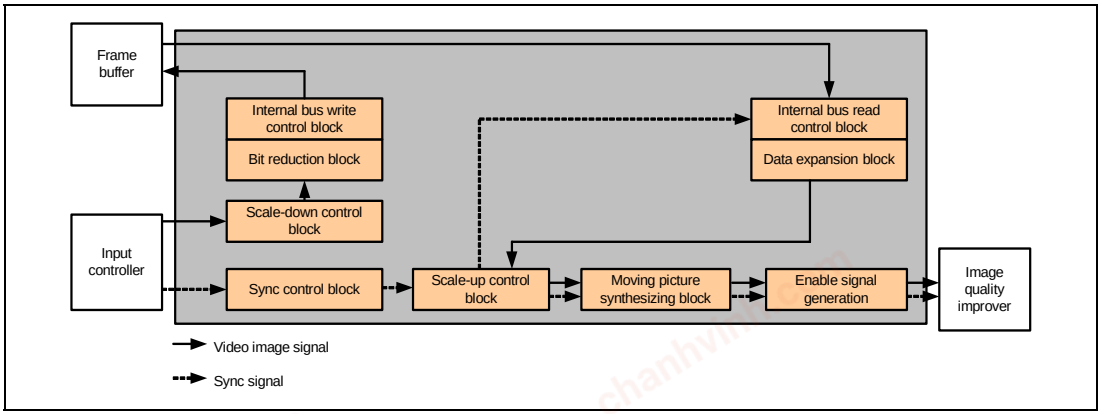

Figure 33.18 Signal Paths for Displaying Input Video Image

(2) Horizontal Scaling (Horizontal Scale Down, Scaling Filter: 2-Tap Linear)

The scaling rate for folding can be calculated as shown below.

RATIO_org = round (1440 ÷ 120 × 4096) = 49152

σ = (49152 × (120 − 1) − (1440 − 1) × 4096) ÷ (120 − 1) = −378.62

Horizontal scaling ratio = round (49152 − (−378.62)) = 49531

chanhvinh.com

(3) Horizontal Scaling (Horizontal Scale Up, Scaling Filter: 2-Tap Linear)

The scaling rate for folding can be calculated as shown below.

RATIO_org = round (120 ÷ 240 × 4096) = 2048

σ = (2048 × (240 – 1) – (120 – 1) × 4096) ÷ (240 – 1) = 8.56

Horizontal scaling ratio = round (2048 – (8.56)) = 2039

(4) Vertical Scaling (Vertical Scale Up, Scaling Filter: 2-Tap Linear)

The scaling rate for folding can be calculated as shown below.

RATIO_org = round (240 ÷ 320 × 4096) = 3072

σ = (3072 × (320 – 1) – (240 – 1) × 4096) ÷ (320 – 1) = 3.21

Vertical scaling ratio = round (3072 – (3.21)) = 3069

(5) Setting Frame Buffer Access Area

Since video data is written to the frame buffer after scaled down, the write size is 640 × 240 pixels.

The frame buffer area required is 640 pixels or more for line offset and line offset × 240 pixels or more for frame offset.

Here, the frame buffer work area is assumed to be 1024 × 256 pixels.

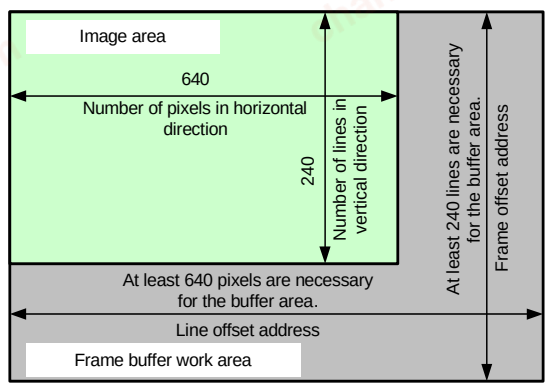

Figure 33.19 Frame Buffer Access Area Setting

chanhvinh.com

Since the frame buffer is accessed in 64-bit units, YCbCr422 (16 bits) is accessed in 4-pixel units.

The line offset address values to be set are:

RES_LN_OFF[14:0] = 1024 × 2 = 2048

GR1_LN_OFF[14:0] = 1024 × 2 = 2048

The frame offset address values to be set are:

RES_FLM_OFF[22:0] = RES_LN_OFF[14:0] × 256 = 524288

GR1_FLM_OFF[22:0] = GR1_LN_OFF[14:0] × 256 = 524288

(6) Register Setting Example

Table 33.38 Register Setting Example for 525i Video Input and VGA-Size Video Output

Register Name	Bit Name	Settings	Remarks
Synchronization Control			
SCL0_FRC3	RES_VS_SEL	0	External Vsync selected
SCL0_FRC4	RES_FH[10:0]	799	Horizontal period width of output signal (period width = set value + 1)
Size of Angle of View			
SCL0_DS2	RES_VS[10:0]	15	Vertical capture start position of input signal
SCL0_DS2	RES_VW[10:0]	240	Vertical capture width of input signal
SCL0_DS3	RES_HS[10:0]	244	Horizontal capture start position of input signal
SCL0_DS3	RES_HW[10:0]	1440	Horizontal capture width of input signal
SCL0_FRC6	RES_F_VS[10:0]	35	Vertical valid start position of full screen
SCL0_FRC6	RES_F_VW[10:0]	480	Vertical valid width of full screen
SCL0_FRC7	RES_F_HS[10:0]	144	Horizontal valid start position of full screen
SCL0_FRC7	RES_F_HW[10:0]	640	Horizontal valid width of full screen
SCL0_US2	RES_P_VS[10:0]	35	Vertical valid start position of output image
SCL0_US2	RES_P_VW[10:0]	480	Vertical valid width of output image
SCL0_US3	RES_P_HS[10:0]	144	Horizontal valid start position of output image
SCL0_US3	RES_P_HW[10:0]	640	Horizontal valid width of output image

chanhvinh.com

Register Name	Bit Name	Settings	Remarks
		Scaling Setting	
SCL0_DS4	RES_DS_H_RATIO [15:0]	9224	Horizontal scaling-down because RES_DS_H_RATIO is equal to or larger than 4096
SCL0_DS1	RES_DS_H_ON	1	Horizontal scaling-down on
SCL0_US1	RES_US_H_ON	0	Horizontal scaling-up off
SCL0_US5	RES_US_H_RATIO [15:0]	4096	Horizontal scaling-up off because RES_US_H_RATIO is equal to or larger than 4096
SCL0_DS1	RES_DS_V_ON	0	Vertical scaling-down off
SCL0_US1	RES_US_V_ON	1	Vertical scaling-up on
SCL0_DS6	RES_V_RATIO[15:0]	2044	Vertical scaling-up because RES_V_RATIO is smaller than 4096
SCL0_DS7	RES_OUT_VW[10:0]	240	Vertical valid input width because the vertical scaling-down function is off
SCL0_DS7	RES_OUT_HW[10:0]	640	Horizontal image size after horizontal scaling-down
SCL0_US4	RES_IN_VW[10:0]	240	Vertical width of frame buffer read
SCL0_US4	RES_IN_HW[10:0]	640	Horizontal width of frame buffer read
		IP Conversion Setting	
SCL0_DS5	RES_TOP_INIPHASE [11:0]	2048	Top field adjusted by 0.5-line phase
SCL0_DS5	RES_BTM_INIPHASE [11:0]	0	No phase adjustment for bottom field
SCL0_FRC5	RES_FLD_DLY_SEL	1	IP conversion with two planes of frame buffer used for vertical scaling-up
		Frame Buffer Write Setting	
SCL1_WR1	RES_DS_WR_MD[2:0]	0	Normal write mode for rotation control
SCL1_WR1	RES_MD[1:0]	0	Frame buffer write format YCbCr422 (16 bits)
SCL1_WR2	RES_BASE[31:0]	0	Frame buffer write start address (0 in setting example)
SCL1_WR3	RES_LN_OFF[14:0]	2048	Frame buffer write line offset
SCL1_WR3	RES_FLM_NUM[9:0]	1	Two planes of frame buffer used
SCL1_WR4	RES_FLN_OFF[22:0]	524288	Frame buffer write frame offset
SCL1_WR5	RES_WENB	1	Frame buffer write enabled

chanhvinh.com

Register Name	Bit Name	Settings	Remarks
Frame Buffer Read Setting			
GR1_FLM1	GR1_FLM_SEL[1:0]	0	Frame number for frame buffer write output
GR1_FLM2	GR1_BASE[31:0]	0	Conforming to frame buffer write setting
GR1_FLM3	GR1_LN_OFF[14:0]	2048	Conforming to frame buffer write setting
GR1_FLM4	GR1_FLM_OFF[22:0]	524288	Conforming to frame buffer write setting
GR1_FLM6	GR1_FORMAT[3:0]	8	Frame buffer read format YCbCr422
GR1_FLM_RD	GR1_R_ENB	1	Frame buffer read enabled
GR1_FLM6	GR1_CNV444_MD	1	Mean value interpolation in YCbCr422 → YCbCr444 conversion
Scaling-up Selection			
SCL0_US8	RES_IBUS_SYNC_SEL	0	Scaled-up video signal displayed
GR1_AB1	GR1_DISP_SEL[1:0]	1	Scaling display selected

chanhvinh.com

33.3.2 Scaling Setting Example for Graphics Display

(1) Angle of View for Graphics Display

This section describes an example of setting the signals of the input and output angles of view shown in table 33.39.

Table 33.39 Input and Output Angles of View for Graphics Display

Graphics Size	Output Signal	Graphics Signal Format
640 × 480	640 × 480	RGB888

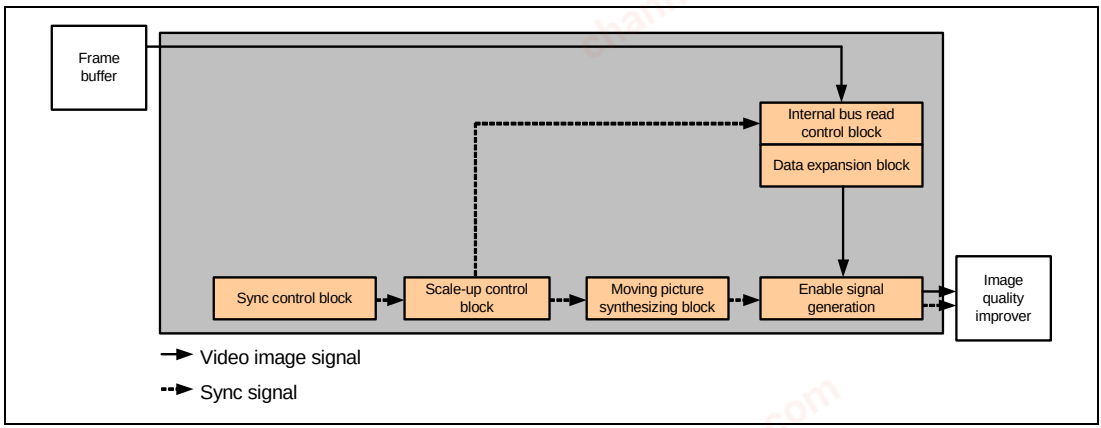

Figure 33.20 Signal Paths for Graphics Display

(2) Setting Frame Buffer Access Area

In the frame buffer in which graphics data is stored, graphics data needs to be expanded in the area of 640 × 480 pixels or larger.

Here, the frame buffer area in which graphics data is expanded is assumed to be 640 × 480 pixels.

Since the frame buffer is accessed in 64-bit units, RGB888 (32 bits) is accessed in 2-pixel units.

The line offset address values to be set are:

GR1_LN_OFF[14:0] = 640 × 4 = 2560

The frame offset address values to be set are:

GR1_FLM_OFF[22:0] = GR1_LN_OFF[14:0] × 480 = 1228800

chanhvinh.com

(3) Register Setting Example

Table 33.40 Register Setting Example for Graphics Display

Register Name	Bit Name	Settings	Remarks
Synchronization Control			
SCL0_FRC3	RES_VS_SEL	1	Free-running Vsync selected (when the appropriate input signal is available, an external sync can also be selected)
SCL0_FRC4	RES_FV[10:0]	524	Vertical period width of output signal (period width = set value + 1)
SCL0_FRC4	RES_FH[10:0]	799	Horizontal period width of output signal (period width = set value + 1)
Size of Angle of View			
SCL0_FRC6	RES_F_VS[10:0]	35	Vertical valid start position of full screen
SCL0_FRC6	RES_F_VW[10:0]	480	Vertical valid width of full screen
SCL0_FRC7	RES_F_HS[10:0]	144	Horizontal valid start position of full screen
SCL0_FRC7	RES_F_HW[10:0]	640	Horizontal valid width of full screen
GR1_AB2	GR1_GRC_VS[10:0]	35	Vertical valid start position of graphics output
GR1_AB2	GR1_GRC_VW[10:0]	480	Vertical valid width of graphics output
GR1_AB3	GR1_GRC_HS[10:0]	144	Horizontal valid start position of graphics output
GR1_AB3	GR1_GRC_HW[10:0]	640	Horizontal valid width of graphics output
Frame Buffer Read Setting			
GR1_FLM1	GR1_FLM_SEL[1:0]	1	Frame number setting with register
GR1_FLM3	GR1_FLM_NUM[9:0]	0	Frame number of frame buffer (0 in setting example)
GR1_FLM5	GR1_FLM_LNUM[9:0]	479	Number of graphics lines (number of lines = set value + 1)
GR1_FLM6	GR1_HW[9:0]	639	Horizontal valid width of graphics (valid width = set value + 1)
GR1_FLM2	GR1_BASE[31:0]	0	Conforming to graphics expansion setting (0 in setting example)
GR1_FLM3	GR1_LN_OFF[14:0]	2560	Conforming to graphics expansion setting

chanhvinh.com

Register Name	Bit Name	Settings	Remarks
Frame Buffer Read Setting			
GR1_FLM4	GR1_FLM_OFF[22:0]	1228800	Conforming to graphics expansion setting
GR1_FLM6	GR1_FORMAT[3:0]	1	Frame buffer read format RGB888
GR1_FLM_RD	GR1_R_ENB	1	Frame buffer read enabled
Scaling-up Selection			
SCL0_US8	RES_IBUS_SYNC_SEL	1	Graphics output displayed
GR1_AB1	GR1_DISP_SEL[1:0]	2	Graphics display selected

chanhvinh.com

33.3.3 Scaling Setting Example for Scaled-up Graphics Display

(1) Angles of View for Input and Output

This section describes an example of setting the signals of the input and output angles of view shown in table 33.41.

Table 33.41 Input and Output Angles of View for Scaled-up Graphics Display

Graphics Size	Output Signal	Graphics Signal Format
640 × 480	800 × 600	RGB565

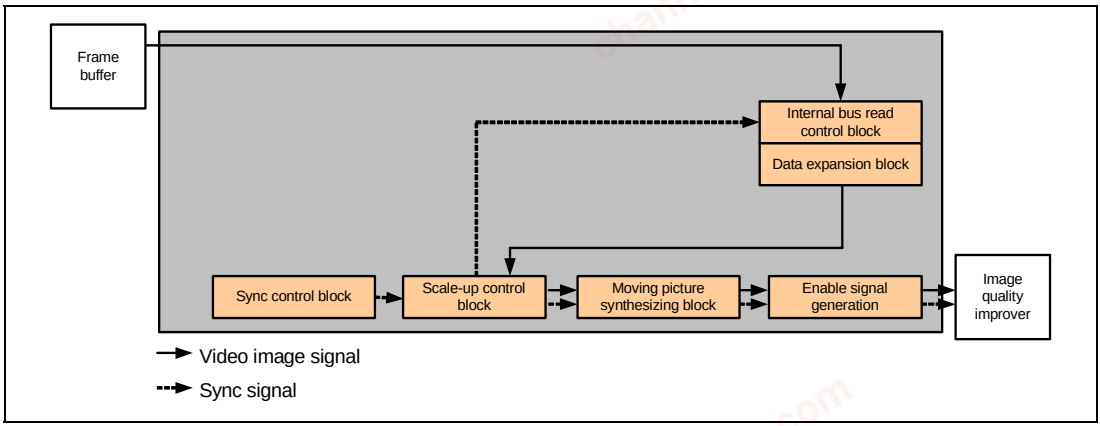

Figure 33.21 Signal Paths for Scaled-up Graphics Display

chanhvinh.com

(2) Horizontal Scaling (Horizontal Scale Up, Scaling Filter: 2-Tap Linear)

The scaling rate for folding can be calculated as shown below.

RATIO_org = round (640 ÷ 800 × 4096) = 3277

σ = (3277 × (800 – 1) – (640 – 1) × 4096) ÷ (800 – 1) = 1.23

Horizontal scaling ratio = round (3277 – (1.23)) = 3276

(3) Vertical Scaling (Vertical Scale Up, Scaling Filter: 2-Tap Linear)

The scaling rate for folding can be calculated as shown below.

RATIO_org = round (480 ÷ 600 × 4096) = 3277

σ = (3277 × (600 – 1) – (480 – 1) × 4096) ÷ (600 – 1) = 1.57

Vertical scaling ratio = round (3277 – (1.57)) = 3275

(4) Setting Frame Buffer Access Area

In the frame buffer in which graphics data is stored, graphics data needs to be expanded in the area of 640 × 480 pixels or larger.

Here, the frame buffer area in which graphics data is expanded is assumed to be 640 × 480 pixels.

Since the frame buffer is accessed in 64-bit units, RGB565 (16 bits) is accessed in 4-pixel units.

The line offset address values to be set are:

GR1_LN_OFF[14:0] = 640 × 2 = 1280

The frame offset address values to be set are:

GR1_FLM_OFF[22:0] = GR1_LN_OFF[14:0] × 480 = 614400

chanhvinh.com

(5) Register Setting Example

Table 33.42 Register Setting Example for Scaled-up Graphics Display

Register Name	Bit Name	Settings	Remarks
Synchronization Control			
SCL0_FRC3	RES_VS_SEL	1	Free-running Vsync selected (when the appropriate input signal is available, an external sync can also be selected)
SCL0_FRC4	RES_FV[10:0]	668	Vertical period width of output signal (period width = set value + 1)
SCL0_FRC4	RES_FH[10:0]	1040	Horizontal period width of output signal (period width = set value + 1)
Size of Angle of View			
SCL0_FRC6	RES_F_VS[10:0]	27	Vertical valid start position of full screen
SCL0_FRC6	RES_F_VW[10:0]	600	Vertical valid width of full screen
SCL0_FRC7	RES_F_HS[10:0]	216	Horizontal valid start position of full screen
SCL0_FRC7	RES_F_HW[10:0]	800	Horizontal valid width of full screen
SCL0_US2	RES_P_VS[10:0]	27	Vertical valid start position of image output
SCL0_US2	RES_P_VW[10:0]	600	Vertical valid width of image output
SCL0_US3	RES_P_HS[10:0]	216	Horizontal valid start position of image output
SCL0_US3	RES_P_HW[10:0]	800	Horizontal valid width of image output
Scaling Setting			
SCL0_US5	RES_US_H_RATIO[15:0]	3276	Horizontal scaling-up because the size is smaller than 4096
SCL0_DS6	RES_V_RATIO[15:0]	3275	Vertical scaling-up because the size is smaller than 4096
SCL0_US1	RES_US_H_ON	1	Horizontal scaling-up on
SCL0_US1	RES_US_V_ON	1	Vertical scaling-up on
SCL0_US4	RES_IN_VW[10:0]	480	Vertical width of frame buffer read
SCL0_US4	RES_IN_HW[10:0]	640	Horizontal width of frame buffer read

chanhvinh.com

Register Name	Bit Name	Settings	Remarks
Frame Buffer Read Setting			
GR1_FLM1	GR1_FLM_SEL[1:0]	1	Frame number setting with register
GR1_FLM3	GR1_FLM_NUM[9:0]	0	Frame number of frame buffer (0 in setting example)
GR1_FLM2	GR1_BASE[31:0]	0	Conforming to graphics expansion setting (0 in setting example)
GR1_FLM3	GR1_LN_OFF[14:0]	1280	Conforming to graphics expansion setting
GR1_FLM4	GR1_FLM_OFF[22:0]	614400	Conforming to graphics expansion setting
GR1_FLM6	GR1_FORMAT[3:0]	0	Frame buffer read format RGB565
GR1_FLM_RD	GR1_R_ENB	1	Frame buffer read enabled
Scaling-up Selection			
SCL0_US8	RES_IBUS_SYNC_SEL	0	Scaled-up video signal displayed
GR1_AB1	GR1_DISP_SEL[1:0]	1	Scaling display selected

chanhvinh.com

chanhvinh.com
chanhvinh.com
chanhvinh.com
chanhvinh.com

chanhvinh.com

Section 34 Video Display Controller 4 (4): Image Quality Improver

34.1 Image Quality Improver

34.1.1 Overview of Functions

The image quality improver subjects scaled YCbCr signals to black stretching, LTI/sharpness processing, and GBR conversion by using a color matrix.

The image quality improver does not act on RGB signals.

Figure 34.1 is a functional block diagram of the image quality improver.

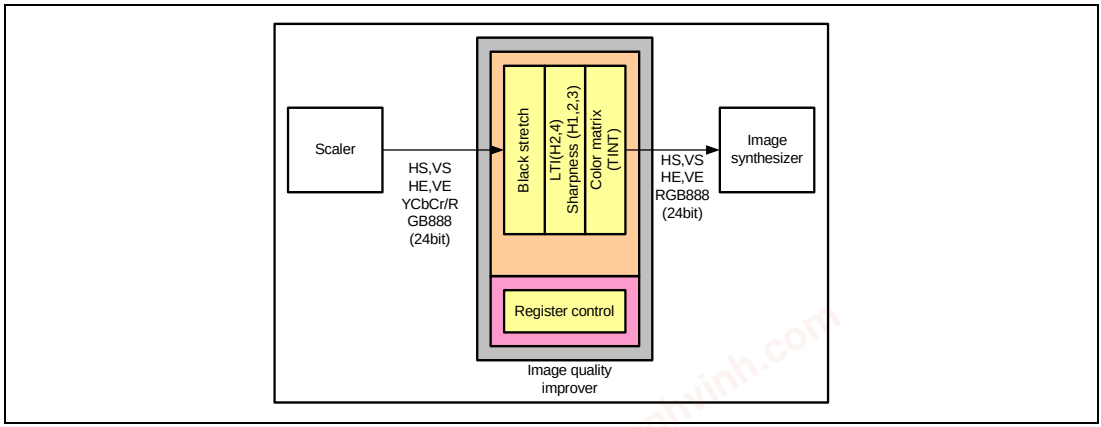

Figure 34.1 Functional Block Diagram of Image Quality Improver

34.1.2 Register Update Control

The control register for image quality improver controls the update timing entirely by vertical synchronous signals.

The vertical synchronous signal launched after the update control register is set to 1 is reflected in various registers, following which the update control register is automatically cleared to 0.

chanhvinh.com

Table 34.1 Register Update Control

Register Name	Bit Name	Initial Value	Description
ADJ_UPDATE	ADJ_VEN	0	Image Quality Improver Register Update 0: Register is not updated. 1: Register is updated by launch of vertical synchronous signal.

34.1.3 Black Stretch

Black stretch refers to the black stretch correction of the Y signal of the input video signal of YCbCr format.

Correction of the Y signal is done by adjusting the time constant, depth (gain), and start point.

Figure 34.2 is a drawing illustrating black stretch correction.

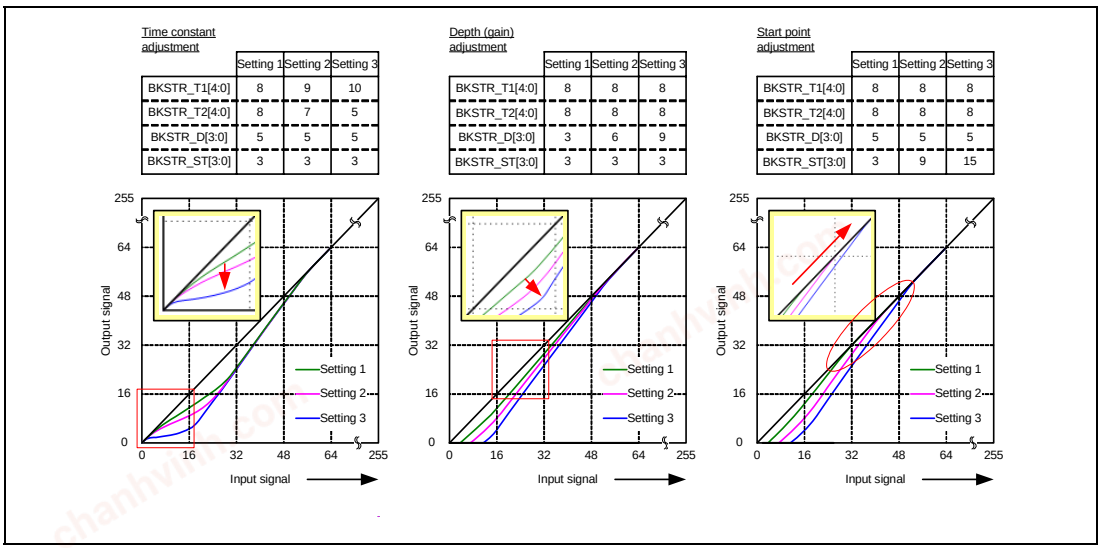

Figure 34.2 Black Stretch Correction (With Sample Settings)

chanhvinh.com

Table 34.2 Black Stretch Control

Register Name	Bit Name	Initial Value	Description
ADJ_BKSTR_SET	BKSTR_ON	0	Black Stretch On/Off Control 0: Black Stretch Off 1: Black Stretch On
ADJ_BKSTR_SET	BKSTR_ST[3:0]	0	Black Stretch Start Point 0 (low) to 15 (high)
ADJ_BKSTR_SET	BKSTR_T1[4:0]	0	Black Stretch Time Constant (T1) 0 (small) to 31 (large)
ADJ_BKSTR_SET	BKSTR_T2[4:0]	0	Black Stretch Time Constant (T2) 0 (small) to 30 (large), 31: Setting prohibited
ADJ_BKSTR_SET	BKSTR_D[3:0]	0	Black Stretch Depth 0 (shallow) to 15 (deep)

chanhvinh.com

34.1.4 Enhancer

The enhancer subjects the scaled Y signal input to transient improvement (LTI) and sharpness processing in the horizontal direction.

(1) Enhancer Area Specification

The operating area of the enhancer is specified with reference to the rising edges of the Hsync signal and Vsync signal. ENH_HS should be set to four or greater clocks, and ENH_VS should be set to two or greater lines. Figure 34.3 shows enhancer area setting.

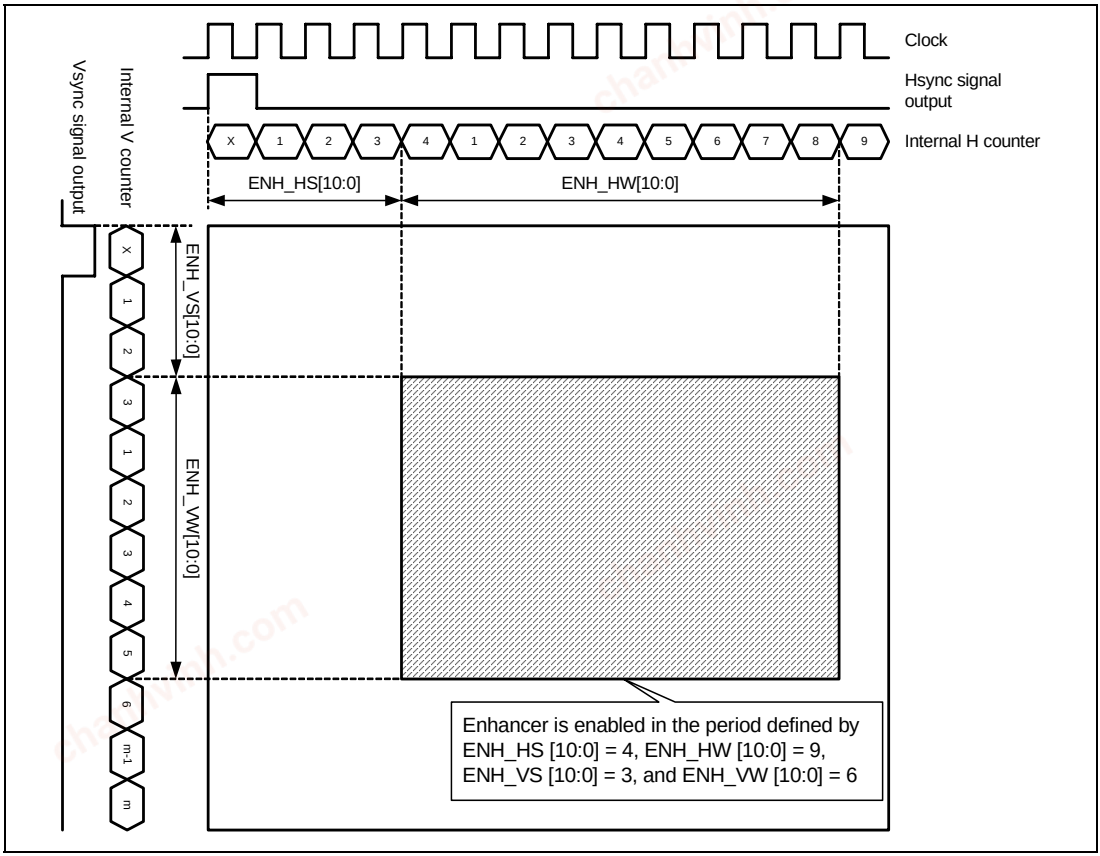

Figure 34.3 Period when Enhancer is Enabled

Setting ENH_DISP_ON to 1 displays the enhancer-enabled area with frame lines.

chanhvinh.com

Table 34.3 Enhancer Area Control

Register Name	Bit Name	Initial Value	Description
ADJ_ENH_TIM1	ENH_MD	1	Operating Mode 0: RGB mode 1: YCbCr mode
ADJ_ENH_TIM2	ENH_VS[10:0]	0	Start Position of Vertical Valid Image Area in Enhancer-Enabled Area Note: Set to 2 or greater lines.
ADJ_ENH_TIM2	ENH_VW[10:0]	0	Width of Vertical Valid Image Area in Enhancer-Enabled Area
ADJ_ENH_TIM3	ENH_HS[10:0]	0	Start Position of Horizontal Valid Image Area in Enhancer-Enabled Area Note: Set to 4 or greater clocks.
ADJ_ENH_TIM3	ENH_HW[10:0]	0	Width of Horizontal Valid Image Area in Enhancer-Enabled Area
ADJ_ENH_TIM1	ENH_DISP_ON	0	Frame Line Display in Enhancer-Enabled Area 0: Off 1: On

(2) LTI (Luminance Transient Improvement)

The enhancer subjects the Y signal input to transient improvement in the horizontal direction.

Transient improvement of the blanking signal is turned off.

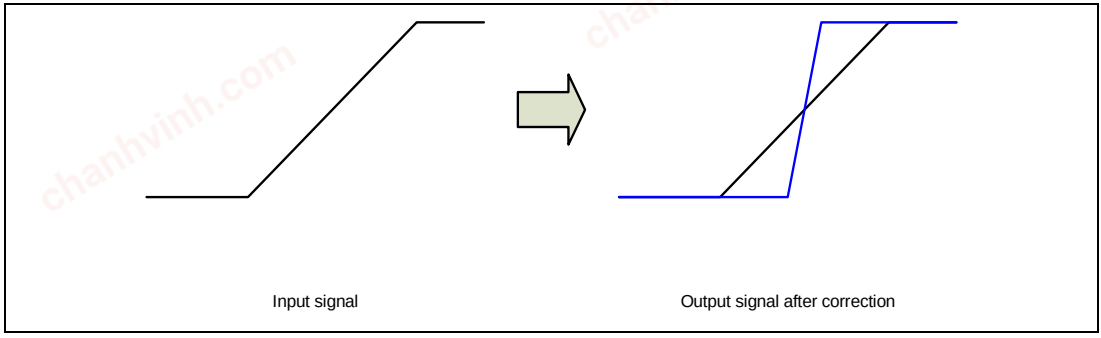

Figure 34.4 LTI Correction

After edge detection of the image, the LTI can be independently controlled in the two horizontal bands.

chanhvinh.com

In LTI, the median filter is inserted after edge detection of the image.

In LTI (H4), the reference pixels of the median filter can be selected.

However, under normal operations, half the tap data (second adjacent pixel) at edge detection is used as reference.

Table 34.4 Reference Pixel Table for LTI

LTI Band	Reference Pixel for Edge Detection	LPF Application	Median Filter Reference Pixels
Horizontal LTI (H2)	Second adjacent pixel used as reference	LPF not applied or LPF (1,2,1)	Adjacent pixel used as reference
Horizontal LTI (H4)	Fourth adjacent pixel used as reference	LPF (1,2,1)	Adjacent pixel or second adjacent pixel used as reference

In LTI, the detection result can be subjected to a coring process.

The core value set in the register is subtracted from the edge detection result, and LTI correction is performed on the coring output after subtraction.

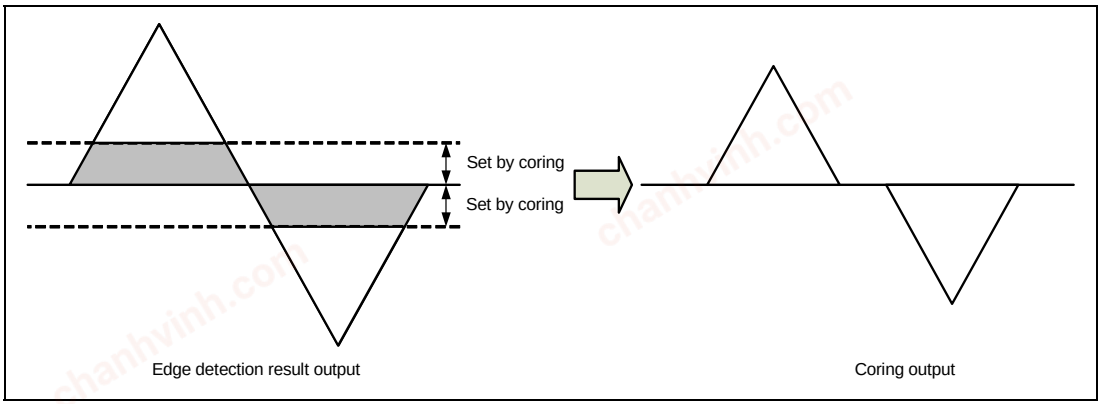

Figure 34.5 LTI Coring

chanhvinh.com

Table 34.5 LTI Control

Register Name	Bit Name	Initial Value	Description
ADJ_ENH_LTI1	LTI_H_ON	0	LTI On/Off Control 0: LTI off 1: LTI on
ADJ_ENH_LTI1	LTI_H2_INC_ZERO [7:0]	10	Median Filter LTI Correction Threshold LTI correction is disabled when: |right TAP value – center TAP value| < LTI1_H2_INC_ZERO or |left TAP value – center TAP value| < LTI1_H2_INC_ZERO.
ADJ_ENH_LTI1	LTI_H2_LPF_SEL	0	LPF Selection for Folding Prevention Before H2 Edge Detection 0: LPF not selected 1: LPF selected
ADJ_ENH_LTI1	LTI_H2_GAIN[7:0]	0	LTI Edge Amplitude Value Gain 0 (0 times) to 64 (+1 times) to 255 (+ approx. 4 times)
ADJ_ENH_LTI1	LTI_H2_CORE[7:0]	0	LTI Coring (Maximum core value of 255) Amplitude smaller than or equal to the value of LTI_H2_CORE is cored from the edge amplitude value. (A core value setting of 128 remains unchanged.)
ADJ_ENH_LTI2	LTI_H4_INC_ZERO [7:0]	10	Median Filter LTI Correction Threshold LTI correction is disabled when: |right TAP value – center TAP value| < LTI1_H4_INC_ZERO or |left TAP value – center TAP value| < LTI1_H4_INC_ZERO.
ADJ_ENH_LTI2	LTI_H4_MEDIAN_TAP_SEL	0	Median Filter Reference Pixel Select 0: Second adjacent pixel selected as reference 1: Adjacent pixel selected as reference
ADJ_ENH_LTI2	LTI_H4_GAIN[7:0]	0	LTI Edge Amplitude Value Gain 0 (0 times) to 64 (+1 times) to 255 (+ approx. 4 times)

chanhvinh.com

Register Name	Bit Name	Initial Value	Description
ADJ_ENH_LTI2	LTI_H4_CORE[7:0]	0	LTI Coring (Maximum core value of 255) Amplitude less than or equal to the value of LTI_H4_CORE is cored from the edge amplitude value. (A core value setting of 128 remains unchanged.)

(3) Sharpness Process

The enhancer performs edge enhancement on the Y signal input by adding overshoot and undershoot to the original signal. Edge enhancement of the blanking signal is turned off.

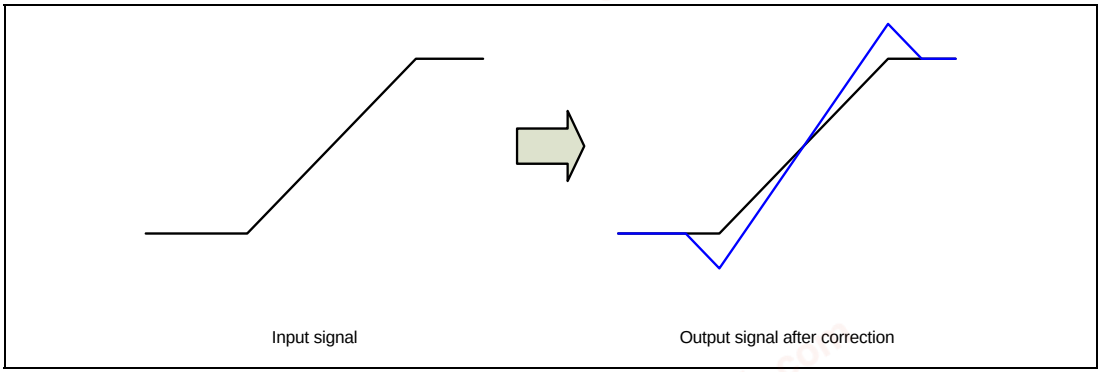

Figure 34.6 Sharpness Correction

After edge detection of the image, the sharpness can be independently controlled in the three horizontal bands.

In horizontal sharpness, a 3-tap low-pass filter (LPF) is inserted before edge detection to prevent folding. The LPF can be turned on or off by register setting.

chanhvinh.com

Table 34.6 Reference Pixel Table for Sharpness

Sharpness Band	Reference Pixel for Edge Detection	LPF Application
Horizontal sharpness (H1)	Adjacent pixel used as reference	LPF not applied
Horizontal sharpness (H2)	Second adjacent pixel used as reference	LPF not applied or LPF (1,2,1)
Horizontal sharpness (H3)	Third adjacent pixel used as reference	LPF (1,2,1)

The edge amplitude of the edge to be enhanced is adjusted according to the value of SHP_CORE.

Edge enhancement is accomplished when the edge detection result of the image is greater than the value of SHP_CORE.

In edge enhancement, a correction value is output by multiplying (edge amplitude value - SHP_CORE) by sharpness gain.

Sharpness is turned off when the edge detection result of the image is smaller than the value of SHP_CORE.

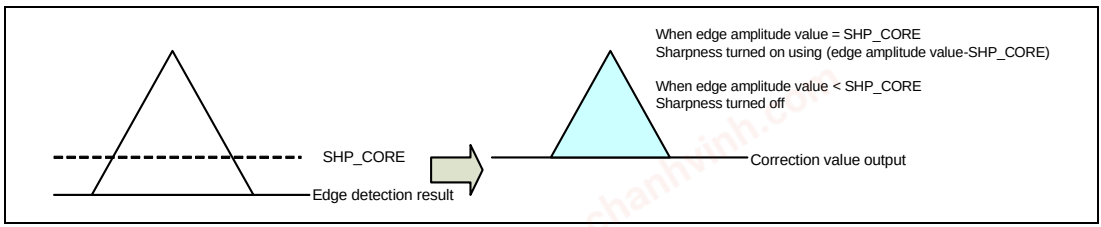

Figure 34.7 Sharpness Characteristics

chanhvinh.com

Table 34.7 Sharpness Control

Register Name	Bit Name	Initial Value	Description
ADJ_ENH_SHP1	SHP_H_ON	0	Sharpness On/Off Control 0: Horizontal sharpness off 1: Horizontal sharpness on
ADJ_ENH_SHP3	SHP_H2_LPF_SEL	0	LPF Selection for Folding Prevention Before H2 Edge Detection 0: LPF not selected 1: LPF selected
ADJ_ENH_SHP2	SHP_H1_CLIP_O [7:0]	0	Sharpness Correction Value Clipping (on the Overshoot Side) Correction value clipped according to SHP_H1_CLIP_O
ADJ_ENH_SHP2	SHP_H1_CLIP_U [7:0]	0	Sharpness Correction Value Clipping (on the Undershoot Side) Correction value clipped according to SHP_H1_CLIP_U
ADJ_ENH_SHP2	SHP_H1_GAIN_O [7:0]	0	Sharpness Edge Amplitude Value Gain (on the Overshoot Side) 0 (0 times) to 64 (+1 times) to 255 (+ approx. 4 times) Sharpness correction value = SHP_H1_GAIN_O × (edge amplitude value – SHP_H1_CORE)
ADJ_ENH_SHP2	SHP_H1_GAIN_U [7:0]	0	Sharpness Edge Amplitude Value Gain (on the Undershoot Side) 0 (0 times) to 64 (+1 times) to 255 (+ approx. 4 times) Sharpness correction value = SHP_H1_GAIN_U × (edge amplitude value – SHP_H1_CORE)
ADJ_ENH_SHP1	SHP_H1_CORE [6:0]	0	Active Sharpness Range Edge amplitude value ≥ SHP_H1_CORE: Sharpness processing on Edge amplitude value < SHP_H1_CORE: Sharpness processing off Sharpness processing is always on when the edge detection value is 128 or greater.

chanhvinh.com

Register Name	Bit Name	Initial Value	Description
ADJ_ENH_SHP4	SHP_H2_CLIP_O [7:0]	0	Sharpness Correction Value Clipping (on the Overshoot Side) Correction value clipped according to SHP_H2_CLIP_O
ADJ_ENH_SHP4	SHP_H2_CLIP_U [7:0]	0	Sharpness Correction Value Clipping (on the Undershoot Side) Correction value clipped according to SHP_H2_CLIP_U
ADJ_ENH_SHP4	SHP_H2_GAIN_O [7:0]	0	Sharpness Edge Amplitude Value Gain (on the Overshoot Side) 0 (0 times) to 64 (+1 times) to 255 (+ approx. 4 times) Sharpness correction value = SHP_H2_GAIN_O × (edge amplitude value – SHP_H2_CORE)
ADJ_ENH_SHP4	SHP_H2_GAIN_U [7:0]	0	Sharpness Edge Amplitude Value Gain (on the Undershoot Side) 0 (0 times) to 64 (+1 times) to 255 (+ approx. 4 times) Sharpness correction value = SHP_H2_GAIN_U × (edge amplitude value – SHP_H2_CORE)
ADJ_ENH_SHP3	SHP_H2_CORE [6:0]	0	Active Sharpness Range Edge amplitude value ≥ SHP_H2_CORE: Sharpness processing on Edge amplitude value < SHP_H2_CORE: Sharpness processing off Sharpness processing is always on when the edge detection value is 128 or greater.
ADJ_ENH_SHP6	SHP_H3_CLIP_O [7:0]	0	Sharpness Correction Value Clipping (on the Overshoot Side) Correction value clipped according to SHP_H3_CLIP_O
ADJ_ENH_SHP6	SHP_H3_CLIP_U [7:0]	0	Sharpness Correction Value Clipping (on the Undershoot Side) Correction value clipped according to SHP_H3_CLIP_U

chanhvinh.com

Register Name	Bit Name	Initial Value	Description
ADJ_ENH_SHP6	SHP_H3_GAIN_O [7:0]	0	Sharpness Edge Amplitude Value Gain (on the Overshoot Side) 0 (0 times) to 64 (+1 times) to 255 (+ approx. 4 times) Sharpness correction value = SHP_H3_GAIN_O × (edge amplitude value – SHP_H3_CORE)
ADJ_ENH_SHP6	SHP_H3_GAIN_U [7:0]	0	Sharpness Edge Amplitude Value Gain (on the Undershoot Side) 0 (0 times) to 64 (+1 times) to 255 (+ approx. 4 times) Sharpness correction value = SHP_H3_GAIN_U × (edge amplitude value – SHP_H3_CORE)
ADJ_ENH_SHP5	SHP_H3_CORE [6:0]	0	Active Sharpness Range Edge amplitude value ≥ SHP_H3_CORE: Sharpness processing on Edge amplitude value < SHP_H3_CORE: Sharpness processing off Sharpness processing is always on when the edge detection value is 128 or greater.

34.1.5 Color Matrix

Color matrix is performed by adjusting the offset of each input signal and nine-axis gain. This allows YCbCr to GBR conversion.

(1) GBR to GBR Conversion

$$YGIN_A = YGIN + ADJ_MTX_YG - 128$$

$$CBBIN_A = CBBIN + ADJ_MTX_B - 128$$

$$CRRIN_A = CRRIN + ADJ_MTX_R - 128$$

$$YGOUT = (ADJ_MTX_GG \times YGIN_A + ADJ_MTX_GB \times CBBIN_A + ADJ_MTX_GR \times CRRIN_A) \div 256$$

$$CBBOUT = (ADJ_MTX_BG \times YGIN_A + ADJ_MTX_BB \times CBBIN_A + ADJ_MTX_BR \times CRRIN_A) \div 256$$

chanhvinh.com

CRROUT = (ADJ_MTX_RG × YGIN_A + ADJ_MTX_RB × CBBIN_A + ADJ_MTX_RR × CRRIN_A) ÷ 256

(2) YCbCr to GBR Conversion

YGIN_A = YGIN + ADJ_MTX_YG – 128

CBBIN_A = CBBIN – 128

CRRIN_A = CRRIN – 128

YGOUT = (ADJ_MTX_GG × YGIN_A + ADJ_MTX_GB × CBBIN_A + ADJ_MTX_GR × CRRIN_A) ÷ 256

CBBOUT = (ADJ_MTX_BG × YGIN_A + ADJ_MTX_BB × CBBIN_A + ADJ_MTX_BR × CRRIN_A) ÷ 256

CRROUT = (ADJ_MTX_RG × YGIN_A + ADJ_MTX_RB × CBBIN_A + ADJ_MTX_RR × CRRIN_A) ÷ 256

Table 34.8 Matrix Coefficients (Standard Values) of SMPTE 293M

	YGIN		CBBIN		CRRIN	
	Coefficient	**Bit Setting**	**Coefficient**	**Bit Setting**	**Coefficient**	**Bit Setting**
YGOUT	1.000	ADJ_MTX_GG = 256	–0.344	ADJ_MTX_GB = 1960	–0.714	ADJ_MTX_GR = 1865
CBBOUT	1.000	ADJ_MTX_BG = 256	1.772	ADJ_MTX_BB = 454	0.000	ADJ_MTX_BR = 0
CRROUT	1.000	ADJ_MTX_RG = 256	0.000	ADJ_MTX_RB = 0	1.402	ADJ_MTX_RR = 359

chanhvinh.com

Table 34.9 Color Matrix Control

Register Name	Bit Name	Initial Value	Description
ADJ_MTX_MODE	ADJ_MTX_MD [1:0]	2	Operating Mode 0: GBR → GBR 1: Setting prohibited 2: YCbCr → GBR 3: Setting prohibited
ADJ_MTX_YG_ADJ0	ADJ_MTX_YG [7:0]	128	Y/G Signal Offset (DC) Adjustment Unsigned (0 (-128) to 128(0) to 255 (+127) [LSB])
ADJ_MTX_CBB_ADJ0	ADJ_MTX_B [7:0]	128	B Signal Offset (DC) Adjustment Unsigned (0 (-128) to 128 (0) to 255 (+127) [LSB])
ADJ_MTX_CRR_ADJ0	ADJ_MTX_R [7:0]	128	R Signal Offset (DC) Adjustment Unsigned (0 (-128) to 128 (0) to 255 (+127) [LSB])
ADJ_MTX_YG_ADJ0	ADJ_MTX_GG [10:0]	256	Gain Adjustment of Y/G Signal of G Signal Output Signed (complement of 2) (-1024 to +1023 [LSB], 256 [LSB] = 1.0 [times])
ADJ_MTX_YG_ADJ1	ADJ_MTX_GB [10:0]	1960	Gain Adjustment of Cb/B Signal of G Signal Output Signed (complement of 2) (-1024 to +1023 [LSB], 256 [LSB] = 1.0 [times])
ADJ_MTX_YG_ADJ1	ADJ_MTX_GR [10:0]	1865	Gain Adjustment of Cr/R Signal of G Signal Output Signed (complement of 2) (-1024 to +1023 [LSB], 256 [LSB] = 1.0 [times])
ADJ_MTX_CBB_ADJ0	ADJ_MTX_BG [10:0]	256	Gain Adjustment of Y/G Signal of B Signal Output Signed (complement of 2) (-1024 to +1023 [LSB], 256 [LSB] = 1.0 [times])

chanhvinh.com

Register Name	Bit Name	Initial Value	Description
ADJ_MTX_CBB_ADJ1	ADJ_MTX_BB [10:0]	454	Gain adjustment of Cb/B signal of B Signal Output Signed (complement of 2) (-1024 to +1023 [LSB], 256 [LSB] = 1.0 [times])
ADJ_MTX_CBB_ADJ1	ADJ_MTX_BR [10:0]	0	Gain Adjustment of Cr/R Signal of B Signal Output Signed (complement of 2) (-1024 to +1023 [LSB], 256 [LSB] = 1.0 [times])
ADJ_MTX_CRR_ADJ0	ADJ_MTX_RG [10:0]	256	Gain Adjustment of Y/G Signal of R Signal Output Signed (complement of 2) (-1024 to +1023 [LSB], 256 [LSB] = 1.0 [times])
ADJ_MTX_CRR_ADJ1	ADJ_MTX_RB [10:0]	0	Gain Adjustment of Cb/B Signal of R Signal Output Signed (complement of 2) (-1024 to +1023 [LSB], 256 [LSB] = 1.0 [times])
ADJ_MTX_CRR_ADJ1	ADJ_MTX_RR [10:0]	359	Gain Adjustment of Cr/R Signal of R Signal Output Signed (complement of 2) (-1024 to +1023 [LSB], 256 [LSB] = 1.0 [times])

chanhvinh.com

34.2 Register Description

Table 34.10 shows the register configuration.

[Symbols used in Register Description]

Initial value : Register value after a reset

— : Undefined value

R/W : Readable/writable. The written value can be read.

R/WC0 : Read and write. Bit is initialized if 0 is written, and ignored if 1 is written.

R/WC1 : Read and write. Bit is initialized if 1 is written, and ignored if 0 is written.

R : Read-only. The write value should always be 0.

—/W : Write-only. Read value is undefined.

Table 34.10 Image Quality Improver Register Configuration

Name	Abbreviation	R/W	Initial Value	Address	Access Size
Register update control register in image quality improver	ADJ_UPDATE	R/WC1	H'0000 0000	H'FFFF 7680	32/16
Black stretch register	ADJ_BKSTR_SET	R/W	H'0000 0000	H'FFFF 7684	32/16
Enhancer timing adjustment register 1	ADJ_ENH_TIM1	R/W	H'0000 0010	H'FFFF 7688	32/16
Enhancer timing adjustment register 2	ADJ_ENH_TIM2	R/W	H'0023 01E0	H'FFFF 768C	32/16
Enhancer timing adjustment register 3	ADJ_ENH_TIM3	R/W	H'0091 0280	H'FFFF 7690	32/16
Enhancer sharpness register 1	ADJ_ENH_SHP1	R/W	H'0000 0000	H'FFFF 7694	32/16
Enhancer sharpness register 2	ADJ_ENH_SHP2	R/W	H'0000 0000	H'FFFF 7698	32/16
Enhancer sharpness register 3	ADJ_ENH_SHP3	R/W	H'0000 0000	H'FFFF 769C	32/16

chanhvinh.com

Name	Abbreviation	R/W	Initial Value	Address	Access Size
Enhancer sharpness register 4	ADJ_ENH_SHP4	R/W	H'0000 0000	H'FFFF 76A0	32/16
Enhancer sharpness register 5	ADJ_ENH_SHP5	R/W	H'0000 0000	H'FFFF 76A4	32/16
Enhancer sharpness register 6	ADJ_ENH_SHP6	R/W	H'0000 0000	H'FFFF 76A8	32/16
Enhancer LTI register 1	ADJ_ENH_LTI1	R/W	H'000A 0000	H'FFFF 76AC	32/16
Enhancer LTI register 2	ADJ_ENH_LTI2	R/W	H'000A 0000	H'FFFF 76B0	32/16
Matrix mode register in image quality improver	ADJ_MTX_MODE	R/W	H'0000 0002	H'FFFF 76B4	32/16
Matrix YG control register 0 in image quality improver	ADJ_MTX_YG_ADJ0	R/W	H'0080 0100	H'FFFF 76B8	32/16
Matrix YG control register 1 in image quality improver	ADJ_MTX_YG_ADJ1	R/W	H'07A8 0749	H'FFFF 76BC	32/16
Matrix CBB control register 0 in image quality improver	ADJ_MTX_CBB_ADJ0	R/W	H'0080 0100	H'FFFF 76C0	32/16
Matrix CBB control register 1 in image quality improver	ADJ_MTX_CBB_ADJ1	R/W	H'01C6 0000	H'FFFF 76C4	32/16
Matrix CRR control register 0 in image quality improver	ADJ_MTX_CRR_ADJ0	R/W	H'0080 0100	H'FFFF 76C8	32/16
Matrix CRR control register 1 in image quality improver	ADJ_MTX_CRR_ADJ1	R/W	H'0000 0167	H'FFFF 76CC	32/16

chanhvinh.com

34.2.1 Register Update Control Register in Image Quality Improver (ADJ_UPDATE)

Bit:	31	30	29	28	27	26	25	24	23	22	21	20	19	18	17	16
	—	—	—	—	—	—	—	—	—	—	—	—	—	—	—	—
Initial value:	0	0	0	0	0	0	0	0	0	0	0	0	0	0	0	0
R/W:	R	R	R	R	R	R	R	R	R	R	R	R	R	R	R	R

Bit:	15	14	13	12	11	10	9	8	7	6	5	4	3	2	1	0
	—	—	—	—	—	—	—	—	—	—	—	—	—	—	—	ADJ_VEN
Initial value:	0	0	0	0	0	0	0	0	0	0	0	0	0	0	0	0
R/W:	R	R	R	R	R	R	R	R	R	R	R	R	R	R	R	R/WC1

Bit	Bit Name	Initial Value	R/W	Description
31 to 1	—	All 0	R	Reserved These bits are always read as 0. The write value should always be 0.
0	ADJ_VEN	0	R/WC1	Image Quality Improver Register Update 0: Registers are not updated. 1: Registers are updated at the rising edge of the Vsync.

chanhvinh.com

34.2.2 Black Stretch Register (ADJ_BKSTR_SET)

Bit:	31	30	29	28	27	26	25	24	23	22	21	20	19	18	17	16
	—	—	—	—	—	—	—	BKSTR_ON	BKSTR_ST[3:0]				BKSTR_D[3:0]			
Initial value:	0	0	0	0	0	0	0	0	0	0	0	0	0	0	0	0
R/W:	R	R	R	R	R	R	R	R/W	R/W	R/W	R/W	R/W	R/W	R/W	R/W	R/W

Bit:	15	14	13	12	11	10	9	8	7	6	5	4	3	2	1	0
	—	—	—	BKSTR_T1[4:0]					—	—	—	BKSTR_T2[4:0]				
Initial value:	0	0	0	0	0	0	0	0	0	0	0	0	0	0	0	0
R/W:	R	R	R	R/W	R/W	R/W	R/W	R/W	R	R	R	R/W	R/W	R/W	R/W	R/W

Bit	Bit Name	Initial Value	R/W	Description
31 to 25	—	All 0	R	Reserved These bits are always read as 0. The write value should always be 0.
24	BKSTR_ON	0	R/W	Black Stretch On/Off Control 0: Black stretch off 1: Black stretch on
23 to 20	BKSTR_ST [3:0]	0	R/W	Black Stretch Start Point Setting values: 0 (low) to 15 (high)
19 to 16	BKSTR_D [3:0]	0	R/W	Depth of Black Stretch Setting Values: 0 (shallow) to 15 (deep)
15 to 13	—	All 0	R	Reserved These bits are always read as 0. The write value should always be 0.
12 to 8	BKSTR_T1 [4:0]	0	R/W	Black Stretch Time Constant (T1) Setting Values: 0 (small) to 31 (large)
7 to 5	—	All 0	R	Reserved These bits are always read as 0. The write value should always be 0.
4 to 0	BKSTR_T2 [4:0]	0	R/W	Black Stretch Time Constant (T2) Setting Values: 0 (small) to 31 (large)

Note: This register is updated when ADJ_VEN in ADJ_UPDATE is 1.

chanhvinh.com

34.2.3 Enhancer Timing Adjustment Register 1 (ADJ_ENH_TIM1)

Bit:	31	30	29	28	27	26	25	24	23	22	21	20	19	18	17	16
	—	—	—	—	—	—	—	—	—	—	—	—	—	—	—	—
Initial value:	0	0	0	0	0	0	0	0	0	0	0	0	0	0	0	0
R/W:	R	R	R	R	R	R	R	R	R	R	R	R	R	R	R	R

Bit:	15	14	13	12	11	10	9	8	7	6	5	4	3	2	1	0
	—	—	—	—	—	—	—	—	—	—	—	ENH_MD	—	—	—	ENH_DISP_ON
Initial value:	0	0	0	0	0	0	0	0	0	0	0	1	0	0	0	0
R/W:	R	R	R	R	R	R	R	R	R	R	R	R/W	R	R	R	R/W

Bit	Bit Name	Initial Value	R/W	Description
31 to 5	—	All 0	R	Reserved These bits are always read as 0. The write value should always be 0.
4	ENH_MD	1	R/W	Operating Mode 0: RGB mode 1: YCbCr mode
3 to 1	—	All 0	R	Reserved These bits are always read as 0. The write value should always be 0.
0	ENH_DISP_ON	0	R/W	Frame Line Display On/Off of Enhancer-Enabled Area 0: Display off 1: Display on

Note: This register is updated when ADJ_VEN in ADJ_UPDATE is 1.

chanhvinh.com

34.2.4 Enhancer Timing Adjustment Register 2 (ADJ_ENH_TIM2)

Bit:	31	30	29	28	27	26	25	24	23	22	21	20	19	18	17	16
	—	—	—	—	—	ENH_VS[10:0]										
Initial value:	0	0	0	0	0	0	0	0	0	0	1	0	0	0	1	1
R/W:	R	R	R	R	R	R/W	R/W	R/W	R/W	R/W	R/W	R/W	R/W	R/W	R/W	R/W

Bit:	15	14	13	12	11	10	9	8	7	6	5	4	3	2	1	0
	—	—	—	—	—	ENH_VW[10:0]										
Initial value:	0	0	0	0	0	0	0	1	1	1	1	0	0	0	0	0
R/W:	R	R	R	R	R	R/W	R/W	R/W	R/W	R/W	R/W	R/W	R/W	R/W	R/W	R/W

Bit	Bit Name	Initial Value	R/W	Description
31 to 27	—	All 0	R	Reserved These bits are always read as 0. The write value should always be 0.
26 to 16	ENH_VS [10:0]	35	R/W	Start Position of Vertical Valid Image Area in Enhancer-Enabled Area Note: Set to 2 or greater lines.
15 to 11	—	All 0	R	Reserved These bits are always read as 0. The write value should always be 0.
10 to 0	ENH_VW [10:0]	480	R/W	Width of Vertical Valid Image Area in Enhancer-Enabled Area

Note: This register is updated when ADJ_VEN in ADJ_UPDATE is 1.

chanhvinh.com

34.2.5 Enhancer Timing Adjustment Register 3 (ADJ_ENH_TIM3)

Bit:	31	30	29	28	27	26	25	24	23	22	21	20	19	18	17	16
	—	—	—	—	—	ENH_HS[10:0]										
Initial value:	0	0	0	0	0	0	0	0	1	0	0	1	0	0	0	1
R/W:	R	R	R	R	R	R/W	R/W	R/W	R/W	R/W	R/W	R/W	R/W	R/W	R/W	R/W

Bit:	15	14	13	12	11	10	9	8	7	6	5	4	3	2	1	0
	—	—	—	—	—	ENH_HW[10:0]										
Initial value:	0	0	0	0	0	0	1	0	1	0	0	0	0	0	0	0
R/W:	R	R	R	R	R	R/W	R/W	R/W	R/W	R/W	R/W	R/W	R/W	R/W	R/W	R/W

Bit	Bit Name	Initial Value	R/W	Description
31 to 27	—	All 0	R	Reserved These bits are always read as 0. The write value should always be 0.
26 to 16	ENH_HS [10:0]	145	R/W	Start Position of Horizontal Valid Image Area in Enhancer-Enabled Image Area Note: Set to 4 or greater clocks.
15 to 11	—	All 0	R	Reserved These bits are always read as 0. The write value should always be 0.
10 to 0	ENH_HW [10:0]	640	R/W	Width of Horizontal Image Area in Enhancer-Enabled Area

Note: This register is updated when ADJ_VEN in ADJ_UPDATE is 1.

chanhvinh.com

34.2.6 Enhancer Sharpness Register 1 (ADJ_ENH_SHP1)

Bit:	31	30	29	28	27	26	25	24	23	22	21	20	19	18	17	16
	—	—	—	—	—	—	—	—	—	—	—	—	—	—	—	SHP_H_ON
Initial value:	0	0	0	0	0	0	0	0	0	0	0	0	0	0	0	0
R/W:	R	R	R	R	R	R	R	R	R	R	R	R	R	R	R	R/W

Bit:	15	14	13	12	11	10	9	8	7	6	5	4	3	2	1	0
	—	—	—	—	—	—	—	—	—	SHP_H1_CORE[6:0]						
Initial value:	0	0	0	0	0	0	0	0	0	0	0	0	0	0	0	0
R/W:	R	R	R	R	R	R	R	R	R	R/W	R/W	R/W	R/W	R/W	R/W	R/W

Bit	Bit Name	Initial Value	R/W	Description
31 to 17	—	All 0	R	Reserved These bits are always read as 0. The write value should always be 0.
16	SHP_H_ON	0	R/W	Sharpness On/Off Control 0: Horizontal sharpness off 1: Horizontal sharpness on
15 to 7	—	All 0	R	Reserved These bits are always read as 0. The write value should always be 0.
6 to 0	SHP_H1_CORE[6:0]	0	R/W	Active Sharpness Range Edge amplitude value ≥ SHP_H1_CORE: Sharpness processing on Edge amplitude value < SHP_H1_CORE: Sharpness processing off Sharpness processing is always on when the edge detection value is 128 or greater.

Note: This register is updated when ADJ_VEN is in ADJ_UPDATE is 1.

chanhvinh.com

34.2.7 Enhancer Sharpness Register 2 (ADJ_ENH_SHP2)

Bit:	31	30	29	28	27	26	25	24	23	22	21	20	19	18	17	16
	SHP_H1_CLIP_O[7:0]								SHP_H1_CLIP_U[7:0]							
Initial value:	0	0	0	0	0	0	0	0	0	0	0	0	0	0	0	0
R/W:	R/W	R/W	R/W	R/W	R/W	R/W	R/W	R/W	R/W	R/W	R/W	R/W	R/W	R/W	R/W	R/W

Bit:	15	14	13	12	11	10	9	8	7	6	5	4	3	2	1	0
	SHP_H1_GAIN_O[7:0]								SHP_H1_GAIN_U[7:0]							
Initial value:	0	0	0	0	0	0	0	0	0	0	0	0	0	0	0	0
R/W:	R/W	R/W	R/W	R/W	R/W	R/W	R/W	R/W	R/W	R/W	R/W	R/W	R/W	R/W	R/W	R/W

Bit	Bit Name	Initial Value	R/W	Description
31 to 24	SHP_H1_CLIP_O[7:0]	0	R/W	Sharpness Correction Value Clipping (on the Overshoot Side) Correction value clipped according to SHP_H1_CLIP_O
23 to 16	SHP_H1_CLIP_U[7:0]	0	R/W	Sharpness Correction Value Clipping (on the Undershoot Side) Correction value clipped according to SHP_H1_CLIP_U
15 to 8	SHP_H1_GAIN_O [7:0]	0	R/W	Sharpness Edge Amplitude Value Gain (on the Overshoot Side) 0 (0 times) to 64 (+1 times) to 255 (+approx. 4 times) Sharpness correction value = SHP_H1_GAIN_O × (edge amplitude value – SHP_H1_CORE)
7 to 0	SHP_H1_GAIN_U [7:0]	0	R/W	Sharpness Edge Amplitude Value Gain (on the Undershoot Side) 0 (0 times) to 64 (+1 times) to 255 (+approx. 4 times) Sharpness correction value = SHP_H1_GAIN_U × (Edge amplitude value – SHP_H1_CORE)

Note: This register is updated when ADJ_VEN in ADJ_UPDATE is 1.

chanhvinh.com

34.2.8 Enhancer Sharpness Register 3 (ADJ_ENH_SHP3)

Bit:	31	30	29	28	27	26	25	24	23	22	21	20	19	18	17	16
	—	—	—	—	—	—	—	—	—	—	—	—	—	—	—	SHP_H2_LPF_SEL
Initial value:	0	0	0	0	0	0	0	0	0	0	0	0	0	0	0	0
R/W:	R	R	R	R	R	R	R	R	R	R	R	R	R	R	R	R/W

Bit:	15	14	13	12	11	10	9	8	7	6	5	4	3	2	1	0
	—	—	—	—	—	—	—	—	—	SHP_H2_CORE[6:0]						
Initial value:	0	0	0	0	0	0	0	0	0	0	0	0	0	0	0	0
R/W:	R	R	R	R	R	R	R	R	R	R/W	R/W	R/W	R/W	R/W	R/W	R/W

Bit	Bit Name	Initial Value	R/W	Description
31 to 17	—	All 0	R	Reserved These bits are always read as 0. The write value should always be 0.
16	SHP_H2_LPF_SEL	0	R/W	LPF Selection for Folding Prevention Before H2 Edge Detection 0: LPF not selected 1: LPF selected
15 to 7	—	All 0	R	Reserved These bits are always read as 0. The write value should always be 0.
6 to 0	SHP_H2_CORE[6:0]	0	R/W	Active Sharpness Range Edge amplitude value ≥ SHP_H2_CORE: Sharpness processing on Edge amplitude value < SHP_H2_CORE: Sharpness processing off Sharpness processing is unchanged when the edge detection value is 128 or higher

Note: This register is updated when ADJ_VEN in ADJ_UPDATE is 1.

chanhvinh.com

34.2.9 Enhancer Sharpness Register 4 (ADJ_ENH_SHP4)

Bit:	31	30	29	28	27	26	25	24	23	22	21	20	19	18	17	16
	SHP_H2_CLIP_O[7:0]								SHP_H2_CLIP_U[7:0]							
Initial value:	0	0	0	0	0	0	0	0	0	0	0	0	0	0	0	0
R/W:	R/W	R/W	R/W	R/W	R/W	R/W	R/W	R/W	R/W	R/W	R/W	R/W	R/W	R/W	R/W	R/W

Bit:	15	14	13	12	11	10	9	8	7	6	5	4	3	2	1	0
	SHP_H2_GAIN_O[7:0]								SHP_H2_GAIN_U[7:0]							
Initial value:	0	0	0	0	0	0	0	0	0	0	0	0	0	0	0	0
R/W:	R/W	R/W	R/W	R/W	R/W	R/W	R/W	R/W	R/W	R/W	R/W	R/W	R/W	R/W	R/W	R/W

Bit	Bit Name	Initial Value	R/W	Description
31 to 24	SHP_H2_CLIP_O[7:0]	0	R/W	Sharpness Correction Value Clipping (on the Overshoot Side) Correction value clipped according to SHP_H2_CLIP_O
23 to 16	SHP_H2_CLIP_U[7:0]	0	R/W	Sharpness Correction Value Clipping (on the Undershoot Side) Correction value clipped according to SHP_H2_CLIP_U
15 to 8	SHP_H2_GAIN_O [7:0]	0	R/W	Sharpness Edge Amplitude Value Gain (on the Overshoot Side) 0 (0 times) to 64 (+1 times) to 255 (+ approx. 4 times) Sharpness correction value = SHP_H2_GAIN_O × (edge amplitude value – SHP_H2_CORE)
7 to 0	SHP_H2_GAIN_U [7:0]	0	R/W	Sharpness Edge Amplitude Value Gain (on the Undershoot Side) 0 (0 times) to 64 (+1 times) to 255 (+ approx. 4 times) Sharpness correction value = SHP_H2_GAIN_U × (edge amplitude value – SHP_H2_CORE)

Note: This register is updated when ADJ_VEN in ADJ_UPDATE is 1.

chanhvinh.com

34.2.10 Enhancer Sharpness Register 5 (ADJ_ENH_SHP5)

Bit:	31	30	29	28	27	26	25	24	23	22	21	20	19	18	17	16
	—	—	—	—	—	—	—	—	—	—	—	—	—	—	—	—
Initial value:	0	0	0	0	0	0	0	0	0	0	0	0	0	0	0	0
R/W:	R	R	R	R	R	R	R	R	R	R	R	R	R	R	R	R

Bit:	15	14	13	12	11	10	9	8	7	6	5	4	3	2	1	0
	—	—	—	—	—	—	—	—	—	SHP_H3_CORE[6:0]						
Initial value:	0	0	0	0	0	0	0	0	0	0	0	0	0	0	0	0
R/W:	R	R	R	R	R	R	R	R	R	R/W	R/W	R/W	R/W	R/W	R/W	R/W

Bit	Bit Name	Initial Value	R/W	Description
31 to 7	—	All 0	R	Reserved These bits are always read as 0. The write value should always be 0.
6 to 0	SHP_H3_CORE[6:0]	0	R/W	Active Sharpness Range Edge amplitude value ≥ SHP_H3_CORE: Sharpness processing on Edge amplitude value < SHP_H3_CORE: Sharpness processing off Sharpness processing is unchanged when the edge detection value is 128 or higher

Note: This register is updated when ADJ_VEN in ADJ_UPDATE is 1.

chanhvinh.com

34.2.11 Enhancer Sharpness Register 6 (ADJ_ENH_SHP6)

Bit:	31	30	29	28	27	26	25	24	23	22	21	20	19	18	17	16
	SHP_H3_CLIP_O[7:0]								SHP_H3_CLIP_U[7:0]							
Initial value:	0	0	0	0	0	0	0	0	0	0	0	0	0	0	0	0
R/W:	R/W	R/W	R/W	R/W	R/W	R/W	R/W	R/W	R/W	R/W	R/W	R/W	R/W	R/W	R/W	R/W

Bit:	15	14	13	12	11	10	9	8	7	6	5	4	3	2	1	0
	SHP_H3_GAIN_O[7:0]								SHP_H3_GAIN_U[7:0]							
Initial value:	0	0	0	0	0	0	0	0	0	0	0	0	0	0	0	0
R/W:	R/W	R/W	R/W	R/W	R/W	R/W	R/W	R/W	R/W	R/W	R/W	R/W	R/W	R/W	R/W	R/W

Bit	Bit Name	Initial Value	R/W	Description
31 to 24	SHP_H3_CLIP_O[7:0]	0	R/W	Sharpness Correction Value Clipping (on the Overshoot Side) Correction value clipped according to SHP_H3_CLIP_O
23 to 16	SHP_H3_CLIP_U[7:0]	0	R/W	Sharpness Correction Value Clipping (on the Undershoot Side) Correction value clipped according to SHP_H3_CLIP_U
15 to 8	SHP_H3_GAIN_O [7:0]	0	R/W	Sharpness Edge Amplitude Value Gain (on the Overshoot Side) 0 (0 times) to 64 (+1 times) to 255 (+ approx. 4 times) Sharpness correction value = SHP_H3_GAIN_O × (Edge amplitude value – SHP_H3_CORE)
7 to 0	SHP_H3_GAIN_U [7:0]	0	R/W	Sharpness Edge Amplitude Value Gain (on the Undershoot Side) 0 (0 times) to 64 (+1 times) to 255 (+ approx. 4 times) Sharpness correction value = SHP_H3_GAIN_U × (Edge amplitude value – SHP_H3_CORE)

Note: This register is updated when ADJ_VEN in ADJ_UPDATE is 1.

chanhvinh.com

34.2.12 Enhancer LTI Register 1 (ADJ_ENH_LTI1)

Bit:	31	30	29	28	27	26	25	24	23	22	21	20	19	18	17	16
	LTI_H_ON	—	—	—	—	—	—	LTI_H2_LPF_SEL	LTI_H2_INC_ZERO[7:0]							
Initial value:	0	0	0	0	0	0	0	0	0	0	0	0	1	0	1	0
R/W:	R/W	R	R	R	R	R	R	R/W	R/W	R/W	R/W	R/W	R/W	R/W	R/W	R/W

Bit:	15	14	13	12	11	10	9	8	7	6	5	4	3	2	1	0
	LTI_H2_GAIN[7:0]								LTI_H2_CORE[7:0]							
Initial value:	0	0	0	0	0	0	0	0	0	0	0	0	0	0	0	0
R/W:	R/W	R/W	R/W	R/W	R/W	R/W	R/W	R/W	R/W	R/W	R/W	R/W	R/W	R/W	R/W	R/W

Bit	Bit Name	Initial Value	R/W	Description
31	LTI_H_ON	0	R/W	LTI On/Off Control 0: LTI off 1: LTI on
30 to 25	—	All 0	R	Reserved These bits are always read as 0. The write value should always be 0.
24	LTI_H2_LPF_SEL	0	R/W	LPF Selection for Folding Prevention Before H2 Edge Detection 0: LPF not selected 1: LPF selected
23 to 16	LTI_H2_INC_ZERO[7:0]	10	R/W	Median Filter LTI Correction Threshold LTI correction is disabled when | right TAP value – center TAP value | < LTI_H2_INC_ZERO or | left TAP value – center TAP value | < LTI_H2_INC_ZERO
15 to 8	LTI_H2_GAIN[7:0]	0	R/W	LTI Edge Amplitude Value Gain 0 (0 times) to 64 (+ 1 times) to 255 (+ approx. 4 times)
7 to 0	LTI_H2_CORE[7:0]	0	R/W	LTI Coring (Maximum Core value of 255) Amplitude less than or equal to the value of LTI_H2_CORE is cored from the edge amplitude value. (A core value setting of 128 remains unchanged)

Note: This register is updated when ADJ_VEN in ADJ_UPDATE is 1.

chanhvinh.com

34.2.13 Enhancer LTI Register 2 (ADJ_ENH_LTI2)

Bit:	31	30	29	28	27	26	25	24	23	22	21	20	19	18	17	16
	—	—	—	—	—	—	—	LTI_H4_MEDIAN_TAP_SEL	LTI_H4_INC_ZERO[7:0]							
Initial value:	0	0	0	0	0	0	0	0	0	0	0	0	1	0	1	0
R/W:	R	R	R	R	R	R	R	R/W	R/W	R/W	R/W	R/W	R/W	R/W	R/W	R/W

Bit:	15	14	13	12	11	10	9	8	7	6	5	4	3	2	1	0
	LTI_H4_GAIN[7:0]								LTI_H4_CORE[7:0]							
Initial value:	0	0	0	0	0	0	0	0	0	0	0	0	0	0	0	0
R/W:	R/W	R/W	R/W	R/W	R/W	R/W	R/W	R/W	R/W	R/W	R/W	R/W	R/W	R/W	R/W	R/W

Bit	Bit Name	Initial Value	R/W	Description
31 to 25	—	All 0	R	Reserved These bits are always read as 0. The write value should always be 0.
24	LTI_H4_MEDIAN_TAP_SEL	0	R/W	Median Filter Reference Pixel Select 0: Second adjacent pixel selected as reference 1: Adjacent pixel selected as reference
23 to 16	LTI_H4_INC_ZERO[7:0]	10	R/W	Median Filter LTI Correction Threshold LTI correction is disabled when | right TAP value – center TAP value | < LTI_H4_INC_ZERO or | left TAP value – center TAP value | < LTI_H4_INC_ZERO
15 to 8	LTI_H4_GAIN[7:0]	0	R/W	LTI Edge Amplitude Value Gain 0 (0 times) to 64 (+ 1 times) to 255 (+ approx. 4 times)
7 to 0	LTI_H4_CORE[7:0]	0	R/W	LTI Coring (Maximum Core value of 255) Amplitude less than or equal to the value of LTI_H4_CORE is cored from the edge amplitude value (A core value setting of 128 remains unchanged)

Note: This register is updated when ADJ_VEN in ADJ_UPDATE is 1.

chanhvinh.com

34.2.14 Matrix Mode Register in Image Quality Improver (ADJ_MTX_MODE)

Bit:	31	30	29	28	27	26	25	24	23	22	21	20	19	18	17	16
	—	—	—	—	—	—	—	—	—	—	—	—	—	—	—	—
Initial value:	0	0	0	0	0	0	0	0	0	0	0	0	0	0	0	0
R/W:	R	R	R	R	R	R	R	R	R	R	R	R	R	R	R	R

Bit:	15	14	13	12	11	10	9	8	7	6	5	4	3	2	1	0
	—	—	—	—	—	—	—	—	—	—	—	—	—	—	ADJ_MTX_MD[1:0]	
Initial value:	0	0	0	0	0	0	0	0	0	0	0	0	0	0	1	0
R/W:	R	R	R	R	R	R	R	R	R	R	R	R	R	R	R/W	R/W

Bit	Bit Name	Initial Value	R/W	Description
31 to 2	—	All 0	R	Reserved These bits are always read as 0. The write value should always be 0.
1, 0	ADJ_MTX_MD[1:0]	2	R/W	Operating Mode 0: GBR → GBR 1: Setting prohibited 2: YCbCr → GBR 3: Setting prohibited

Note: This register is updated when ADJ_VEN in ADJ_UPDATE is 1.

chanhvinh.com

34.2.15 Matrix YG Control Register 0 in Image Quality Improver (ADJ_MTX_YG_ADJ0)

Bit:	31	30	29	28	27	26	25	24	23	22	21	20	19	18	17	16
	—	—	—	—	—	—	—	—	ADJ_MTX_YG[7:0]							
Initial value:	0	0	0	0	0	0	0	0	1	0	0	0	0	0	0	0
R/W:	R	R	R	R	R	R	R	R	R/W	R/W	R/W	R/W	R/W	R/W	R/W	R/W

Bit:	15	14	13	12	11	10	9	8	7	6	5	4	3	2	1	0
	—	—	—	—	—	ADJ_MTX_GG[10:0]										
Initial value:	0	0	0	0	0	0	0	1	0	0	0	0	0	0	0	0
R/W:	R	R	R	R	R	R/W	R/W	R/W	R/W	R/W	R/W	R/W	R/W	R/W	R/W	R/W

Bit	Bit Name	Initial Value	R/W	Description
31 to 24	—	All 0	R	Reserved These bits are always read as 0. The write value should always be 0.
23 to 16	ADJ_MTX_YG[7:0]	128	R/W	Y/G Signal Offset (DC) Adjustment Unsigned (0 (-128) to (128 (0) to 255 (+127) [LSB])
15 to 11	—	All 0	R	Reserved These bits are always read as 0. The write value should always be 0.
10 to 0	ADJ_MTX_GG[10:0]	256	R/W	Gain Adjustment of Y/G Signal of G Signal Output Signed (complement of 2) (-1024 to +1023 [LSB], 256 [LSB] = 1.0 [times])

Note: This register is updated when ADJ_VEN in ADJ_UPDATE is 1.

chanhvinh.com

34.2.16 Matrix YG Control Register 1 in Image Quality Improver (ADJ_MTX_YG_ADJ1)

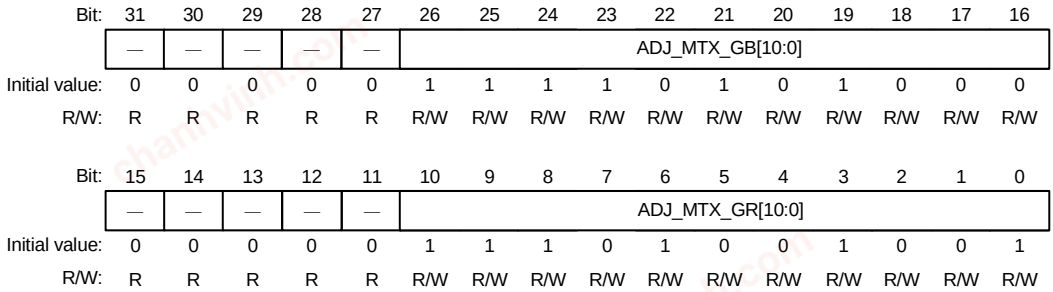

Bit	Bit Name	Initial Value	R/W	Description
31 to 27	—	All 0	R	Reserved These bits are always read as 0. The write value should always be 0.
26 to 16	ADJ_MTX_GB[10:0]	1960	R/W	Gain Adjustment of Cb/B Signal of G Signal Output Signed (complement of 2) (-1024 to +1023 [LSB], 256 [LSB] = 1.0 [times])
15 to 11	—	All 0	R	Reserved These bits are always read as 0. The write value should always be 0.
10 to 0	ADJ_MTX_GR[10:0]	1865	R/W	Gain Adjustment of Cr/R Signal of G Signal Output Signed (complement of 2) (-1024 to +1023 [LSB], 256 [LSB] = 1.0 [times])

Note: This register is updated when ADJ_VEN in ADJ_UPDATE is 1.

chanhvinh.com

34.2.17 Matrix CBB Control Register 0 in Image Quality Improver (ADJ_MTX_CBB_ADJ0)

Bit:	31	30	29	28	27	26	25	24	23	22	21	20	19	18	17	16
	—	—	—	—	—	—	—	—	ADJ_MTX_B[7:0]							
Initial value:	0	0	0	0	0	0	0	0	1	0	0	0	0	0	0	0
R/W:	R	R	R	R	R	R	R	R	R/W	R/W	R/W	R/W	R/W	R/W	R/W	R/W

Bit:	15	14	13	12	11	10	9	8	7	6	5	4	3	2	1	0
	—	—	—	—	—	ADJ_MTX_BG[10:0]										
Initial value:	0	0	0	0	0	0	0	1	0	0	0	0	0	0	0	0
R/W:	R	R	R	R	R	R/W	R/W	R/W	R/W	R/W	R/W	R/W	R/W	R/W	R/W	R/W

Bit	Bit Name	Initial Value	R/W	Description
31 to 24	—	All 0	R	Reserved These bits are always read as 0. The write value should always be 0.
23 to 16	ADJ_MTX_B[7:0]	128	R/W	B Signal Offset (DC) Adjustment Unsigned (0 (-128) to (128 (0) to 255 (+127) [LSB])
15 to 11	—	All 0	R	Reserved These bits are always read as 0. The write value should always be 0.
10 to 0	ADJ_MTX_BG[10:0]	256	R/W	Gain Adjustment of Y/G Signal of B Signal Output Signed (complement of 2) (-1024 to +1023 [LSB], 256 [LSB] = 1.0 [times])

Note: This register is updated when ADJ_VEN in ADJ_UPDATE is 1.

chanhvinh.com

34.2.18 Matrix CBB Control Register 1 in Image Quality Improver (ADJ_MTX_CBB_ADJ1)

Bit:	31	30	29	28	27	26	25	24	23	22	21	20	19	18	17	16
	—	—	—	—	—	ADJ_MTX_BB[10:0]										
Initial value:	0	0	0	0	0	0	0	1	1	1	0	0	0	1	1	0
R/W:	R	R	R	R	R	R/W	R/W	R/W	R/W	R/W	R/W	R/W	R/W	R/W	R/W	R/W

Bit:	15	14	13	12	11	10	9	8	7	6	5	4	3	2	1	0
	—	—	—	—	—	ADJ_MTX_BR[10:0]										
Initial value:	0	0	0	0	0	0	0	0	0	0	0	0	0	0	0	0
R/W:	R	R	R	R	R	R/W	R/W	R/W	R/W	R/W	R/W	R/W	R/W	R/W	R/W	R/W

Bit	Bit Name	Initial Value	R/W	Description
31 to 27	—	All 0	R	Reserved These bits are always read as 0. The write value should always be 0.
26 to 16	ADJ_MTX_BB[10:0]	454	R/W	Gain Adjustment of Cb/B Signal of B Signal Output Signed (complement of 2) (-1024 to +1023 [LSB], 256 [LSB] = 1.0 [times])
15 to 11	—	All 0	R	Reserved These bits are always read as 0. The write value should always be 0.
10 to 0	ADJ_MTX_BR[10:0]	0	R/W	Gain Adjustment of Cr/R Signal of B Signal Output Signed (complement of 2) (-1024 to +1023 [LSB], 256 [LSB] = 1.0 [times])

Note: This register is updated when ADJ_VEN in ADJ_UPDATE is 1.

chanhvinh.com

34.2.19 Matrix CRR Control Register 0 in Image Quality Improver (ADJ_MTX_CRR_ADJ0)

Bit:	31	30	29	28	27	26	25	24	23	22	21	20	19	18	17	16
	—	—	—	—	—	—	—	—	ADJ_MTX_R[7:0]							
Initial value:	0	0	0	0	0	0	0	0	1	0	0	0	0	0	0	0
R/W:	R	R	R	R	R	R	R	R	R/W	R/W	R/W	R/W	R/W	R/W	R/W	R/W

Bit:	15	14	13	12	11	10	9	8	7	6	5	4	3	2	1	0
	—	—	—	—	—	ADJ_MTX_RG[10:0]										
Initial value:	0	0	0	0	0	0	0	1	0	0	0	0	0	0	0	0
R/W:	R	R	R	R	R	R/W	R/W	R/W	R/W	R/W	R/W	R/W	R/W	R/W	R/W	R/W

Bit	Bit Name	Initial Value	R/W	Description
31 to 24	—	All 0	R	Reserved These bits are always read as 50. The write value should always be 50.
23 to 16	ADJ_MTX_R[7:0]	128	R/W	R Signal Offset (DC) Adjustment Unsigned (0 (-128) to (128 (0) to 255 (+127) [LSB])
15 to 11	—	All 0	R	Reserved These bits are always read as 0. The write value should always be 0.
10 to 0	ADJ_MTX_RG[10:0]	256	R/W	Gain Adjustment of Y/G Signal of R Signal Output Signed (complement of 2) (-1024 to +1023 [LSB], 256 [LSB] = 1.0 [times])

Note: This register is updated when ADJ_VEN in ADJ_UPDATE is 1.

chanhvinh.com

34.2.20 Matrix CRR Control Register 1 in Image Quality Improver (ADJ_MTX_CRR_ADJ1)

Bit:	31	30	29	28	27	26	25	24	23	22	21	20	19	18	17	16
	—	—	—	—	—	ADJ_MTX_RB[10:0]										
Initial value:	0	0	0	0	0	0	0	0	0	0	0	0	0	0	0	0
R/W:	R	R	R	R	R	R/W	R/W	R/W	R/W	R/W	R/W	R/W	R/W	R/W	R/W	R/W

Bit:	15	14	13	12	11	10	9	8	7	6	5	4	3	2	1	0
	—	—	—	—	—	ADJ_MTX_RR[10:0]										
Initial value:	0	0	0	0	0	0	0	1	0	1	1	0	0	1	1	1
R/W:	R	R	R	R	R	R/W	R/W	R/W	R/W	R/W	R/W	R/W	R/W	R/W	R/W	R/W

Bit	Bit Name	Initial Value	R/W	Description
31 to 27	—	All 0	R	Reserved These bits are always read as 0. The write value should always be 0.
26 to 16	ADJ_MTX_RB[10:0]	0	R/W	Gain Adjustment of Cb/B Signal of R Signal Output Signed (complement of 2) (-1024 to +1023 [LSB], 256 [LSB] = 1.0 [times])
15 to 11	—	All 0	R	Reserved These bits are always read as 0. The write value should always be 0.
10 to 0	ADJ_MTX_RR[10:0]	359	R	Gain Adjustment of Cr/R Signal of R Signal Output Signed (complement of 2) (-1024 to +1023 [LSB], 256 [LSB] = 1.0 [times])

Note: This register is updated when ADJ_VEN in ADJ_UPDATE is 1.

chanhvinh.com

34.3 Usage Method

34.3.1 Black Stretch Usage Method

The degree of black stretch can be adjusted by setting the depth (BKSTR_D[3:0]) and the start point (BKSTR_ST[3:0]) of the black stretch. The variation in the black stretch time axis can be adjusted by setting the time constant (BKSTR_T1[4:0] and BKSTR_T2[4:0]). By setting the time constant, changes that occur abruptly due to swapping of the scene can be controlled.

Table 34.11 Black Stretch Setting Register

Register Name	Bit Name	Set Value
ADJ_BKSTR_SET	BKSTR_ON	When black stretch is on: 1
ADJ_BKSTR_SET	BKSTR_D[3:0]	Set the depth of black stretch. The depth increases as the value becomes larger.
ADJ_BKSTR_SET	BKSTR_ST[3:0]	Set the start point of black stretch. The stretching area becomes larger as the value becomes larger.
ADJ_BKSTR_SET	BKSTR_T1[4:0]	Set the time constant of black stretch in the positive direction. The changes are more delayed as the value becomes larger.
ADJ_BKSTR_SET	BKSTR_T2[4:0]	Set the time constant of black stretch in the negative direction. The changes are more delayed as the value becomes larger.

Note: ADJ_VEN in ADJ_UPDATE should be set to 1 after setting the registers.

chanhvinh.com

34.3.2 LTI Processing of Enhancer

Figure 34.8 shows an example of LTI adjustment.

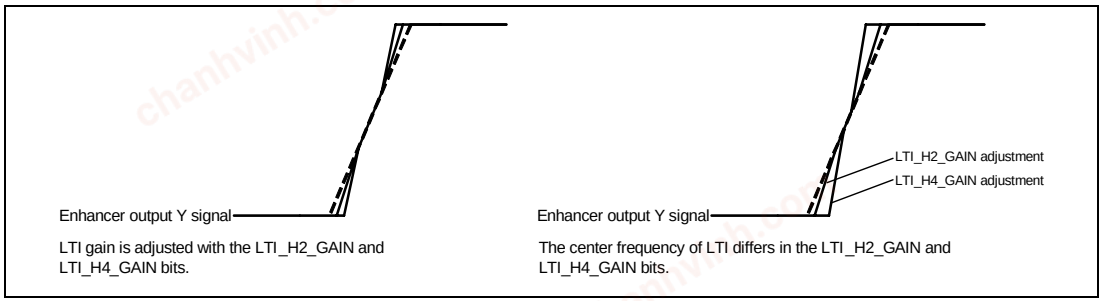

Figure 34.8 Example of LTI Adjustment

chanhvinh.com

34.3.3 Sharpness Processing of Enhancer

Figure 34.9 shows an example of sharpness adjustment.

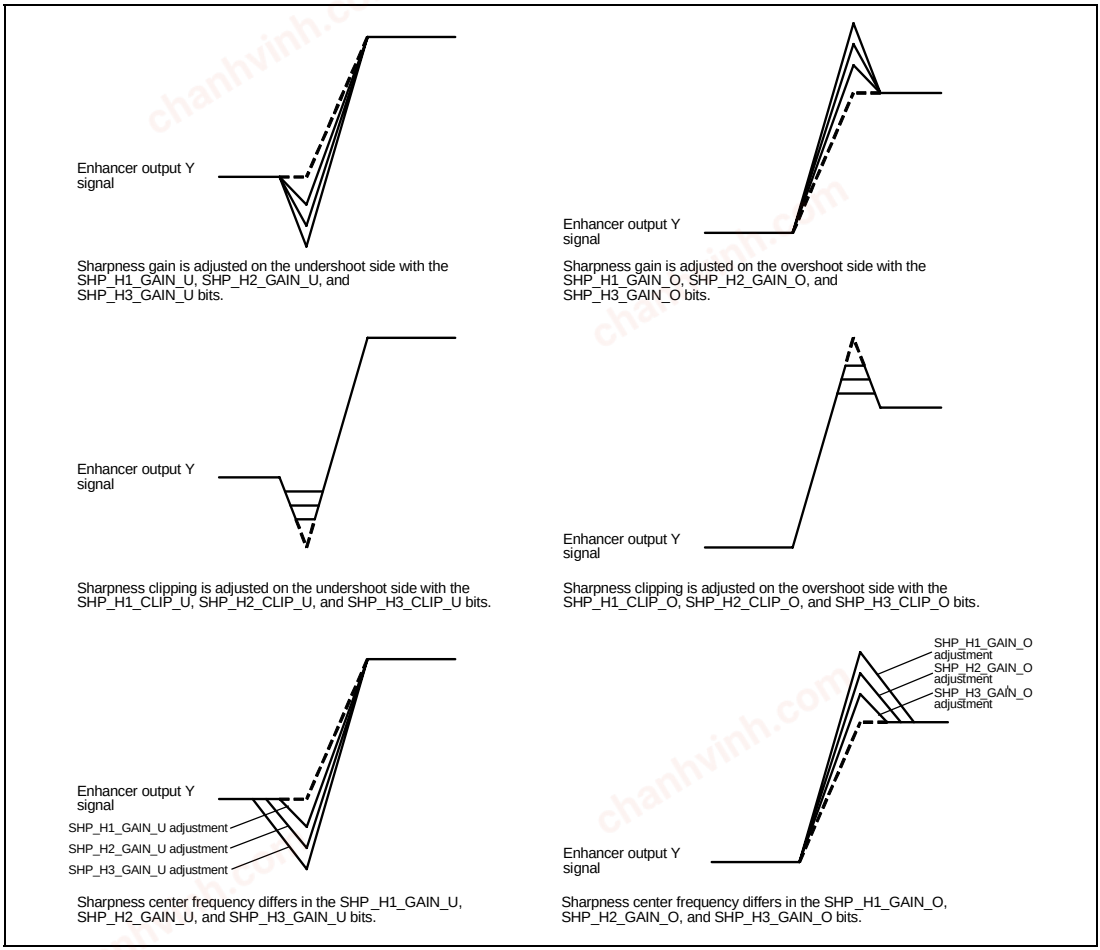

Figure 34.9 Example of Sharpness Adjustment

chanhvinh.com

34.3.4 Setting Method for Color Matrix Data Conversion

GBR signals are assumed to be input to the circuit subsequent to the image quality improver; therefore, the output from the color matrix circuit should be in the GBR format.

Table 34.12 shows an example of GBR conversion setting.

Table 34.12 Recommended Setting Values for Matrix Conversion

		GBR to GBR Conversion	YCBCR to GBR Conversion
Register Name	**Bit Name**	**Recommended Values**	**Recommended Values**
ADJ_MTX_MODE	ADJ_MTX_MD[1:0]	0	2
ADJ_MTX_YG_ADJ0	ADJ_MTX_YG[7:0]	128	128
ADJ_MTX_CBB_ADJ0	ADJ_MTX_B[7:0]	128	128
ADJ_MTX_CRR_ADJ0	ADJ_MTX_R[7:0]	128	128
ADJ_MTX_YG_ADJ0	ADJ_MTX_GG[10:0]	256	256
ADJ_MTX_YG_ADJ1	ADJ_MTX_GB[10:0]	0	1960
ADJ_MTX_YG_ADJ1	ADJ_MTX_GR[10:0]	0	1865
ADJ_MTX_CBB_ADJ0	ADJ_MTX_BG[10:0]	0	256
ADJ_MTX_CBB_ADJ1	ADJ_MTX_BB[10:0]	256	454
ADJ_MTX_CBB_ADJ1	ADJ_MTX_BR[10:0]	0	0
ADJ_MTX_CRR_ADJ0	ADJ_MTX_RG[10:0]	0	256
ADJ_MTX_CRR_ADJ1	ADJ_MTX_RB[10:0]	0	0
ADJ_MTX_CRR_ADJ1	ADJ_MTX_RR[10:0]	256	359

Note: ADJ_VEN in ADJ_UPDATE should be set to 1 after setting the registers.

chanhvinh.com

chanhvinh.com
chanhvinh.com
chanhvinh.com
chanhvinh.com

chanhvinh.com

Section 35 Video Display Controller 4 (5): Image Synthesizer

35.1 Image Synthesizer

35.1.1 Overview of Functions

The image synthesizer reads graphics data from the frame buffer and displays the synthesized image on the screen.

Two graphics planes + video or three graphics planes can be selected for synthesis.

RGB565, RGB888, αRGB1555, αRGB4444, αRGB8888, CLUT8, CLUT4, CLUT1, and YCbCr422 (for the graphics 1 process) formats can be used for graphics data, and RGB565, RGB888, and YCbCr422 formats for video data.

On each of the graphics planes, background color, lower-layer graphics, current graphics, or blended image (graphics 2 and 3 processes) of lower-layer graphics and current graphics can be displayed.

The large-capacity on-chip RAM and external SDRAM can be used as the frame buffer. However, display may not be possible if the bus bandwidth is insufficient when using external SDRAM. Therefore, it is recommended that the frame buffer be allocated in the large-capacity on-chip RAM.

The functional block diagram of the image synthesizer is shown below.

chanhvinh.com

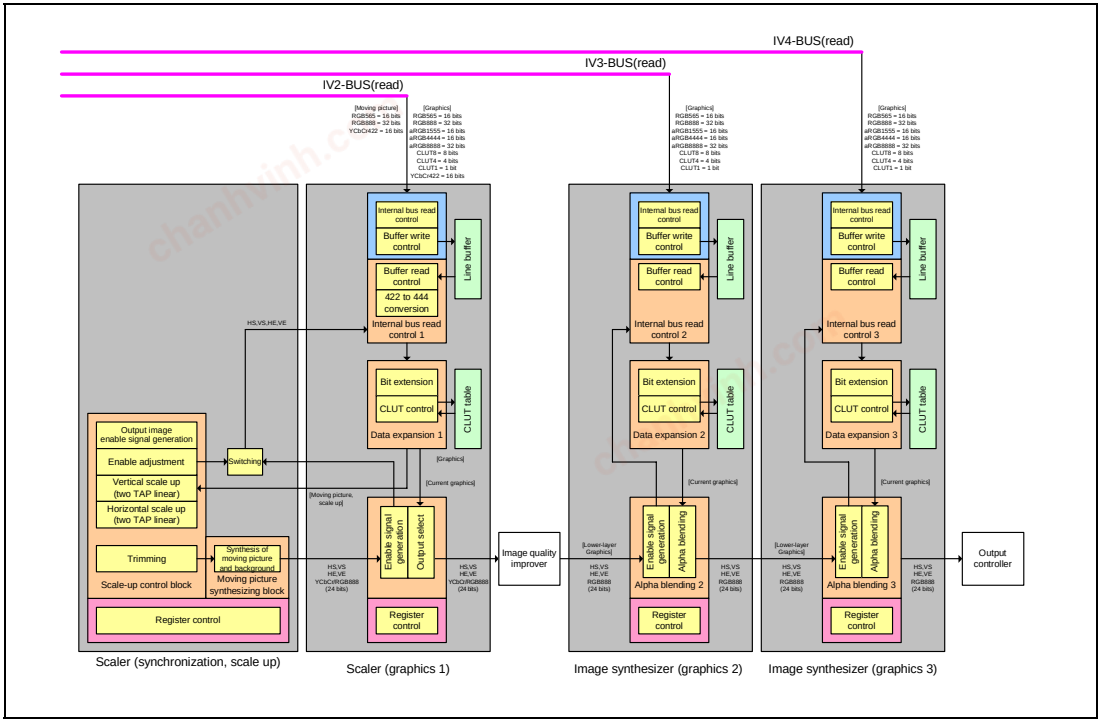

Figure 35.1 Functional Block Diagram of Image Synthesizer

chanhvinh.com

35.1.2 Graphics Data Read Control

Graphics data read can be controlled for the three processes: the graphics 1 process in the scaler and the graphics 2 and 3 processes in the image synthesizer.

The register bits of each process can be identified by the number in the register name like GR1_xxxx, GR2_xxxx, and GR3_xxxx, respectively. In the sections except for Register Descriptions, however, the number is omitted like GR_xxxx for convenience sake.

(1) Updating Registers

The Vsync signal is used to control the update timing of all the registers for graphics display and frame buffer read control.

After 1 is set to the bits in the update control register, the contents of the relevant registers are actually modified at the rising edge of the Vsync signal, when the update control register is automatically cleared to 0.

Table 35.1 Register Update Control

Register Name	Bit Name	Initial Value	Description
GR_UPDATE	GR_P_VEN	0	Graphics Display Register Update 0: Registers are not updated. 1: Registers are updated at the rising edge of the Vsync.
GR_UPDATE	GR_IBUS_VEN	0	Frame Buffer Read Control Register Update 0: Registers are not updated. 1: Registers are updated at the rising edge of the Vsync.

chanhvinh.com

(2) Frame Buffer Burst Transfer Mode

Either 32-byte or 128-byte transfer mode can be selected for accessing the frame buffer in which video data and graphics data are stored.

Table 35.2 Frame Buffer Burst Transfer Mode

Register Name	Bit Name	Initial Value	Description
GR_FLM1	GR_BST_MD	0	Frame Buffer Burst Transfer Mode 0: 32-byte transfer 1: 128- byte transfer

(3) Frame Buffer Control Mode

More than one frame of data is read from the frame buffer.

For graphics data, set the GR_FLM_SEL[1:0] bits to 1, and set the specific display frame number with the GR_FLM_NUM[9:0] bits. For video data, select a mode with the GR_FLM_SEL[1:0] bits depending on the writing process used; the quantity of the frames used for video data is set in the writing process block.

Table 35.3 Frame Buffer Control Mode

Register Name	Bit Name	Initial Value	Description
GR_FLM1	GR_FLM_SEL[1:0]	0	Frame Buffer Address Setting Signal Select 0: Control linked to scaling-down process, or frame 0 selected. *1 1: Register GR_FLM_NUM selected. 2: Control linked to distortion correction, or frame 0 selected. *2 3: Setting prohibited
GR_FLM3	GR_FLM_NUM[9:0]	0	Frame Number of Frame Buffer Manually set the frame number when GR_FLM_SEL = 1.

Notes: 1. For graphics 1 process, frame buffer control links to the scaling-down process. For the graphics 2 and 3 processes, frame 0 is selected.
2. For graphics 1 process, frame buffer control links to distortion correction. For the graphics 2 and 3 processes, frame 0 is selected.

chanhvinh.com

(4) Frame Buffer Read Control

The following bit enables or disables read access to the frame buffer.

Table 35.4 Frame Buffer Read Control

Register Name	Bit Name	Initial Value	Description
GR_FLM_RD	GR_R_ENB	0	Frame Buffer Read Enable 0: Disables read access to the frame buffer. 1: Enables read access to the frame buffer.

(5) Distortion Correction Frame Buffer Control

Two frames (frames 0 and 1) are used for distortion correction, and the frame numbers to be read by the image renderer are set.

The frame numbers to be read (frames 0 and 1) can be switched by setting the GR_IMR_FLM_INV bit.

This bit is enabled only when the GR_FLM_SEL bits are set to 2.

Table 35.5 Distortion Correction Frame Buffer Control

Register Name	Bit Name	Initial Value	Description
GR1_FLM1	GR1_IMR_FLM_INV	0	Sets the frame buffer number for distortion correction.* 0: Does not switch the frame numbers to be read. 1: Switches the frame numbers to be read.

Note: * This function is supported for the graphics 1 process only.

chanhvinh.com

(6) Frame Buffer Size

The following bits set the size of the frame buffer to be read.

The numbers of horizontal pixels and of lines in the vertical direction are set with the GR_HW[9:0] and GR_FLM_LNUM[9:0] bits, respectively.

Table 35.6 Frame Buffer Size

Register Name	Bit Name	Initial Value	Description
GR_FLM6	GR_HW[9:0]	0	Sets the width of the horizontal valid period. The width is (GR_HW + 1) pixels. Note: Set to 2 or greater.
GR_FLM5	GR_FLM_LNUM[9:0]	0	Sets the number of lines in a frame The number of lines is (GR_FLM_LNUM + 1).

(7) Calculating Addresses in Frame Buffer

The data area in the frame buffer is defined using the addresses specified by GR_BASE[31:0], GR_LN_OFF[14:0], and GR_FLM_OFF[22:0] bits and the display frame number.

The GR_LN_OFF[14:0] and GR_FLM_OFF[22:0] bits should be set in units of 32/128 bytes (the lower 5/7 bits should be fixed to 0).

The GR_BASE[31:0] bits should be set in units of 64 bits to set the display data start position (the lower three bits should be fixed).

chanhvinh.com

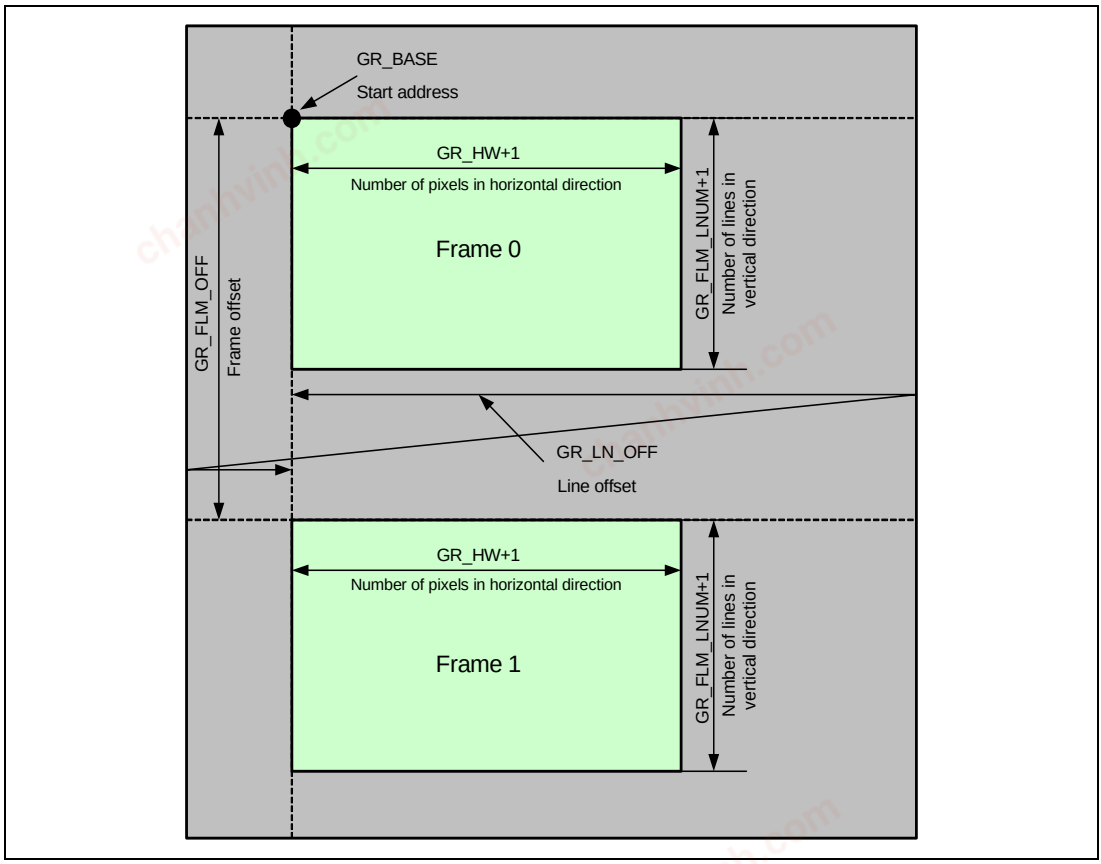

Figure 35.2 Data Arrangement in Frame Buffer

chanhvinh.com

Table 35.7 Calculation of Addresses in Frame Buffer

Register Name	Bit Name	Initial Value	Description
GR_FLM2	GR_BASE[31:0]	0	Frame Buffer Base Address Sets the start address of the frame buffer where frame data is to be stored. GR_BASE[4:3] and GR_BASE[6:3] are referred to during 32-byte burst transfer and 128-byte burst transfer, respectively, to skip the start line data. The lower 3 bits should be set to 000.
GR_FLM3	GR_LN_OFF[14:0]	0	Frame Buffer Line Offset Address Sets the line offset address for calculating the start address of each line. Line 0:GR_BASE Line 1:GR_BASE + GR_LN_OFF × 1 : Line n: GR_BASE + GR_LN_OFF × n For 32-byte transfer, the lower 5 bits should be fixed to 0_0000. For 128-byte transfer, the lower 7 bits should be fixed to 000_0000.
GR_FLM4	GR_FLM_OFF[22:0]	0	Frame Buffer Frame Offset Address (lower) Specifies the frame offset address used for calculating the start address of each frame buffer when more than one buffer is used. Buffer 0: GR_BASE Buffer 1: GR_BASE + GR_FLM_OFF × 1 : Buffer n: GR_BASE + GR_FLM_OFF × n For 32-byte transfer, the lower 5 bits should be fixed to 0_0000. For 128-byte transfer, the lower 7 bits should be fixed to 000_0000.

chanhvinh.com

(8) Setting Frame Buffer Size Smaller than One Frame

Frame buffer size can be set in one-line units.

When the number of lines set with the GR_FLM_LOOP[9:0] bits is smaller than the value of the GR_FLM_LNUM[9:0] bits, data is again read from the start address of the frame buffer after the number of lines set with the (GR_FLM_LOOP[9:0] + 1) bits have been read.

Table 35.8 Setting of Frame Buffer Size Smaller than One Frame

Register Name	Bit Name	Initial Value	Description
GR_FLM5	GR_FLM_LOOP[9:0]	1023	Number of lines when reading the addresses repeatedly by returning to the start address after reaching the end address. The number of lines is (GR_FLM_LOOP + 1).

(9) Line Offset Control for Frame Buffer

The following bit sets the line offset address direction of the frame buffer.

Table 35.9 Line Offset Address Direction Control for Frame Buffer

Register Name	Bit Name	Initial Value	Description
GR_FLM1	GR_LN_OFF_DIR	0	Selects the line offset address direction of the frame buffer. 0: Increments the address by the line offset address. 1: Decrements the address by the line offset address.

chanhvinh.com

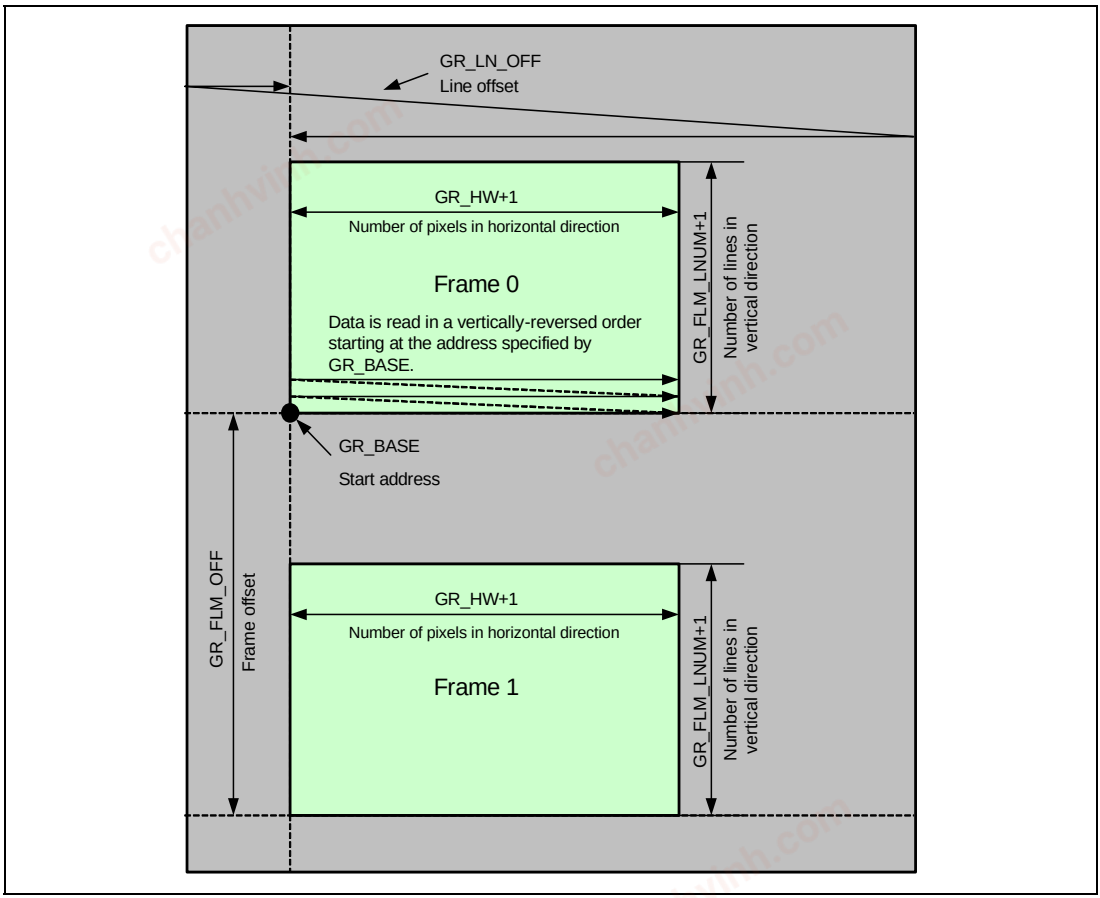

Figure 35.3 Data Arrangement with Line Offset and Decrement Control

chanhvinh.com

(10) Selecting Format of Frame Buffer Read Signal

Signal formats RGB565, RGB888, αRGB1555, αRGB4444, αRGB8888, CLUT8, CLUT4 and CLUT1 are supported for the graphics 1, 2 and 3 processes. The YCbCr422 format is also supported for the graphics 1 process.

The GR_FORMAT[3:0] bits select a signal format.

Table 35.10 Format Selection for Frame Buffer Read Signal

Register Name	Bit Name	Initial Value	Description
GR_FLM6	GR_FORMAT[3:0]	0	Sets the format of the frame buffer read signal. 0: RGB565 1: RGB888 2: αRGB1555 3: αRGB4444 4: αRGB8888 5: CLUT8 6: CLUT4 7: CLUT1 8: YCbCr422 or setting prohibited * 9 to 15: Setting prohibited

Note: * Setting this value selects YCbCr422 for the graphics 1 process, and is prohibited for the graphics 2 and 3 processes.

chanhvinh.com

(11) Endian Control

In the frame buffer, data is handled in 64-bit units, and endian of the data to be read can be controlled by setting the GR_ENDIAN_ON bit. When the GR_ENDIAN_ON bit is set to 1 with YCbCr422 selected, data arrangement is controlled with the GR_YCC_SWAP[2:0] bits.

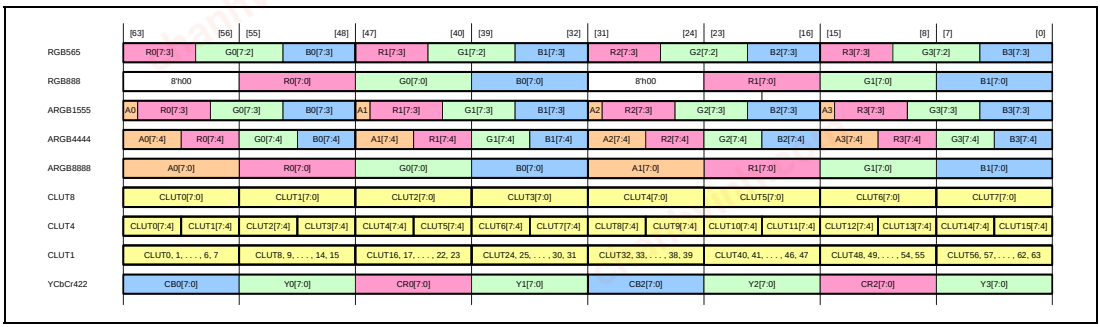

Figure 35.4 Data Arrangement with Endian Control Disabled

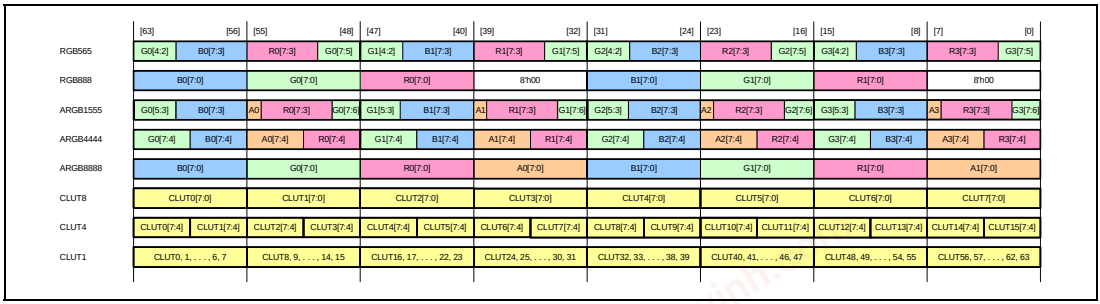

Figure 35.5 Data Arrangement with Endian Control Enabled

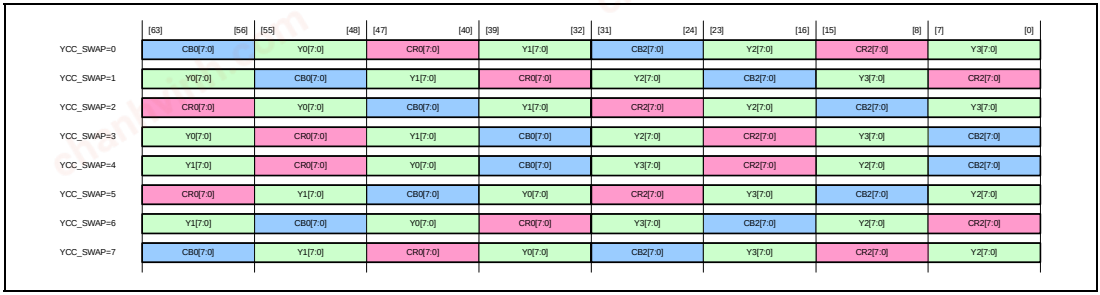

Figure 35.6 YCbCr422 Data Arrangement with Swapping Enabled

chanhvinh.com

Table 35.11 Endian Control

Register Name	Bit Name	Initial Value	Description
GR_FLM6	GR_ENDIAN_ON	0	Turns on/off the endian control of data read from buffer. 0: Off 1: On
GR1_FLM6	GR1_YCC_SWAP [2:0]	0	Controls swapping of data read from buffer in the YCbCr422 format. Valid only when GR1_ENDIAN_ON = 1. * 0: Cb/Y0/Cr/Y1 1: Y0/Cb/Y1/Cr 2: Cr/Y0/Cb/Y1 3: Y0/Cr/Y1/Cb 4: Y1/Cr/Y0/Cb 5: Cr/Y1/Cb/Y0 6: Y1/Cb/Y0/Cr 7: Cb/Y1/Cr/Y0

Note: * These bits are supported for the graphics 1 process only.

(12) Display Start Pixel Setting for Read Data

When a horizontal offset is applied to display the image data in the frame buffer, the display start pixel is set with the GR_BASE[31:0] and GR_STA_POS[5:0] bits. Calculation of the values for the GR_BASE[31:0] and GR_STA_POS[5:0] bits depends on the signal format. The display start pixel can be calculated with the formulas in the table below, where H_OFF is a horizontal offset from the display start pixel.

chanhvinh.com

Table 35.12 Calculation of Display Start Position for Various Signal Formats

Signal Format of Video/Graphics	Number of Bits per Pixel	Calculation Formula *[1]
RGB888 αRGB8888 YCbCr422*[2]	32	GR_BASE[31:3] = t (H_OFF ÷ 2) GR_STA_POS[5:0] = mod (H_OFF ÷ 2)
RGB565 αRGB1555 αRGB4444	16	GR_BASE[31:3] = int (H_OFF ÷ 4) GR_STA_POS[5:0] = mod (H_OFF ÷ 4)
CLUT8	8	GR_BASE[31:3] = int (H_OFF ÷ 8) GR_STA_POS[5:0] = mod (H_OFF ÷ 8)
CLUT4	4	GR_BASE[31:3] = int (H_OFF ÷ 16) GR_STA_POS[5:0] = mod (H_OFF ÷ 16)
CLUT1	1	GR_BASE[31:3] = int (H_OFF ÷ 64) GR_STA_POS[5:0] = mod (H_OFF ÷ 64)

Notes: 1. The functions int() and mod() output a quotient and a remainder, respectively.
2. The YCbCr422 format is not supported for the graphics 2 and 3 processes. In the YCbCr422 format, 32 bits are used for two pixels (Cb, Y0, Cr, and Y1 components). Therefore, the start position is controlled in units of 32 bits.

Table 35.13 Setting of Display Start Pixel of Read Data

Register Name	Bit Name	Initial Value	Description
GR_FLM6	GR_STA_POS[5:0]	0	Sets the amount of data to be skipped through. Specifically data amount equal to the amount indicated by GR_STA_POS is skipped from the start of the line.
GR_FLM2	GR_BASE[31:0]	0	Frame Buffer Base Address Sets the start address of the frame buffer where frame data is to be stored. GR_BASE[4:3] and GR_BASE[6:3] are referred to during 32-byte burst transfer and 128-byte burst transfer, respectively, to skip the start line data. The lower 3 bits should be fixed to 000.

chanhvinh.com

(13) YCbCr422 to YCbCr444 Conversion

Data format for the graphics 1 process is converted from YCbCr422 to YCbCr444.

This function is not supported for the graphics 2 and 3 processes.

Table 35.14 YCbCr422 to YCbCr444 Conversion

Register Name	Bit Name	Initial Value	Description
GR1_FLM6	GR1_CNV444_MD	0	Sets the interpolation mode for YCbCr422 to YCbCr444 conversion. * 0: Hold interpolation 1: Average interpolation

Note: * This register is not provided for the graphics 2 and 3 processes, for which the YCbCr422 format is not supported.

(14) Bit Extension

Converts RGB565, RGB888, αRGB1555, and αRGB4444 formats to αRGB8888.

- RGB565 to αRGB8888 Format Conversion

  After conversion, α[7:0] is fixed to 255.

  After conversion, R[7:0] = R[4:0] × 263 ÷ 32 (round off to an integer), approximation of #R[4:0] × 255 ÷ 31

  After conversion G[7:0] = G[5:0] × 259 ÷ 64 (round off to an integer), approximation of #G[5:0] × 255 ÷ 63

  After conversion, B[7:0] = B[4:0] × 263 ÷ 32 (round off to an integer), approximation of #B[4:0] × 255 ÷ 31

- RGB888 to αRGB8888 Format Conversion

  After conversion, α[7:0] is fixed to 255.

chanhvinh.com

- αRGB1555 to αRGB8888 Format Conversion

  After conversion, α[7:0] is GR_A1 when α input is 1, and GR_A0 when 0.

  After conversion, R[7:0] = R[4:0] × 263 ÷ 32 (round off to an integer), approximation of #R[4:0] × 255 ÷ 31

  After conversion, G[7:0] = G[4:0] × 263 ÷ 32 (round off to an integer), approximation of #G[4:0] × 255 ÷ 31

  After conversion, B[7:0] = B[4:0] × 263 ÷ 32 (round off to an integer), approximation of #B[4:0] × 255 ÷ 31

- αRGB4444 to αRGB8888 Format Conversion

  After conversion, α[7:0] = α[3:0] × 17

  After conversion, R[7:0] = R[3:0] × 17

  After conversion, G[7:0] = G[3:0] × 17

  After conversion, B[7:0] = B[3:0] × 17

(15) Buffer Underflow Processing

When data read from the frame buffer cannot be completed due to bus-traffic related problems, an underflow interrupt signal is output.

chanhvinh.com

35.1.3 Setting Graphics Display Area

The graphics display area is set with the GR_GRC_HS[10:0], GR_GRC_HW[10:0], GR_GRC_VS[10:0], and GR_GRC_VW[10:0] bits based on the rising edges of the Hsync and Vsync signals.

Figure 35.7 shows the graphics display area.

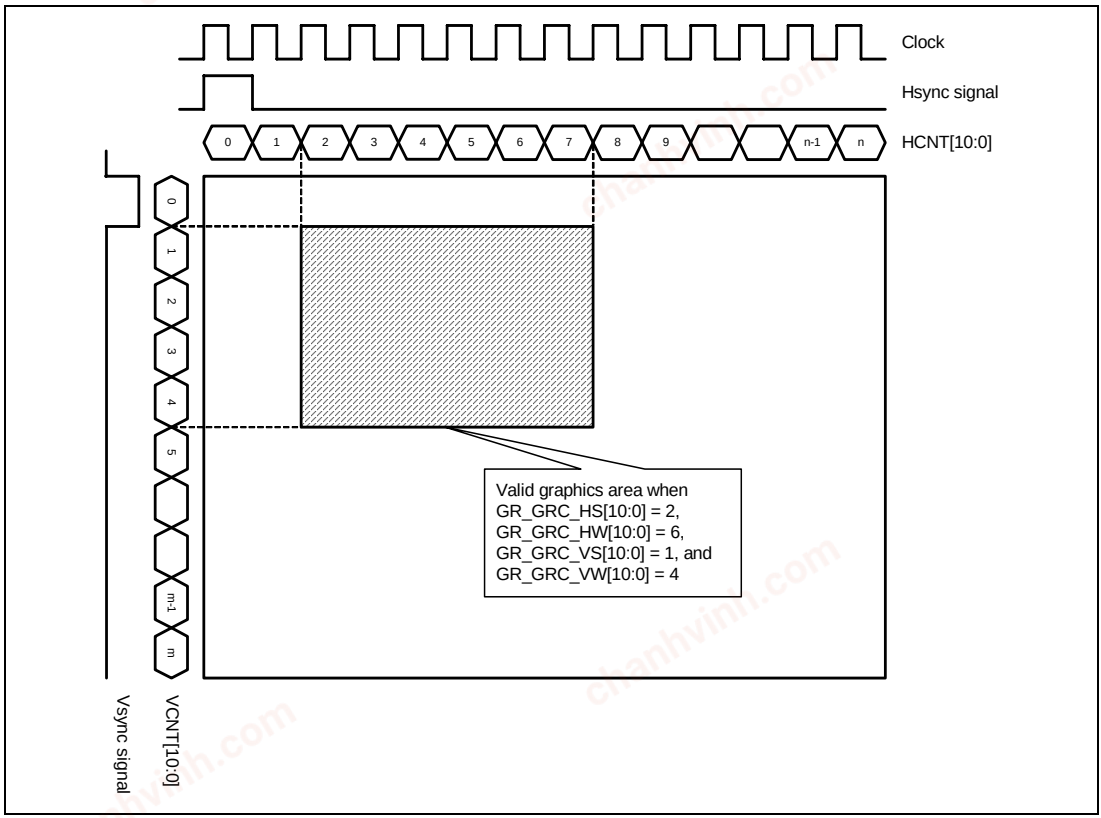

Figure 35.7 Graphics Display Area

The frame line of the graphics area can be displayed by setting the GR_GRC_DISP_ON bit to 1.

chanhvinh.com

Table 35.15 Graphics Image Area Setting

Register Name	Bit Name	Initial Value	Description
GR_AB3	GR_GRC_HS[10:0]	0	Sets the horizontal start position of the graphics image area. Note: Set to 16 or greater clocks and the result of GR_GRC_HS + GR_GRC_HW should be smaller than or equal to 2015 clocks.
GR_AB3	GR_GRC_HW[10:0]	0	Sets the horizontal width of the graphics image area. Note: For displaying an image with 1- or 2-pixel horizontal width, set GR_HW to 2 and GR_GRC_HW to 1 (1-pixel) or 2 (2-pixel).
GR_AB2	GR_GRC_VS[10:0]	0	Sets the vertical start position of the graphics image area. Note: Set to 4 or greater lines and the result of GR_GRC_VS + GR_GRC_VW should be smaller than or equal to 2039 lines.
GR_AB2	GR_GRC_VW[10:0]	0	Sets the vertical width of the graphics image area.
GR_AB1	GR_GRC_DISP_ON	0	Turns on/off frame-line display of the graphics image area. 0: Frame-line display off 1: Frame-line display on

chanhvinh.com

35.1.4 Interrupt Generation at Specified Line

An interrupt signal can be generated at the line specified with the GR3_LINE[10:0] bits.

Table 35.16 Interrupt Generation at Specified Line

Register Name	Bit Name	Initial Value	Description
GR3_CLUT_INT	GR3_LINE[10:0]	0	Line Interrupt Set *
			When the number of lines matches the value of the GR3_LINE bits, an interrupt signal is output. This function is enabled even when the graphics 3 process is not used.

Note: * This function is supported for the graphics 3 process only; these bits are not supported for the graphics 1 and 2 processes.

35.1.5 Formats of Frame Buffer Read Signals and Corresponding Alpha Blending Types

Setting the GR_FORMAT[3:0] bits selects the format of the signal read from the frame buffer.

Table 35.17 shows the signal formats and the corresponding alpha blending types. The blending functions are only available to the graphics 2 and 3 processes. The priority of the alpha value is: alpha blending in rectangular area > chroma-key processing > alpha blending in pixel units.

chanhvinh.com

Table 35.17 Formats of Frame Buffer Read Signal and Corresponding Alpha Blending Types

GR_FORMAT [3:0]	Signal Format	Alpha Blending in Rectangular Area	RGB-Index Chroma-Key Processing	CLUT-Index Chroma-Key Processing	Alpha Blending in Pixel Units
0	RGB565	Supported	Supported *1	Not supported	Not supported *2
1	RGB888	Supported	Supported	Not supported	Not supported *2
2	αRGB1555	Supported	Supported *1*3	Not supported	Supported *3
3	αRGB4444	Supported	Supported *1	Not supported	Supported
4	αRGB8888	Supported	Supported	Not supported	Supported
5	CLUT8	Supported	Not supported	Supported	Supported
5	CLUT4	Supported	Not supported	Supported	Supported
7	CLUT1	Supported *4	Not supported	Supported *4	Supported *4
8	YCbCr422	Not supported *5	Not supported *5	Not supported *5	Not supported *5

Notes: 1. When each color component of the RGB signal read from the frame buffer is not 8 bits, it is converted to 8 bits by calculation in RGB-index chroma-key processing. (See section 35.1.2 (14) Bit Extension.)

2. Since α value is 255, the current graphics is always displayed.
3. α value for data read from the frame buffer is specified with one bit. This one-bit signal selects one of the two registers, each of which holds an 8-bit α value.
4. CLUT value for the frame buffer signal is specified with one bit. This one-bit signal selects one of the two registers, each of which holds the α, G, B, and R values (8 bits for each value). The CLUT table is not referenced.
5. YCbCr422 is supported for the graphics 1 process, but any type of blending and chroma key processing cannot be used.

chanhvinh.com

35.1.6 Display Selection

The GR_DISP_SEL[1:0] bits select the graphics to be displayed from the background color, the lower-layer graphics, the current graphics, and the blended image of the lower-layer graphics and the current graphics. For blending, alpha blending in a rectangular area, RGB-index chroma-key processing, CLUT-index chroma-key processing, or alpha blending in one-pixel units can be selected.

Table 35.18 shows the settings for various display types.

Table 35.18 Settings for Various Display Types

GR_DISP_SEL [1:0]	GR_ARC_ON	GR_CK_ON	Processing for Graphics Area	Processing for the Area Outside the Graphics Area
0	—	—	Background color	Background color
1	—	—	Lower-layer graphics	Lower-layer graphics
2	—	—	Current graphics	Background color
3	1	—	Alpha blending in a rectangular area*	Lower-layer graphics
3	0	1	RGB-index or CLUT-index chroma-key processing	Lower-layer graphics
3	0	0	Alpha-blending in one-pixel units*	Lower-layer graphics

Note: * The blending function is supported for the graphics 2 and 3 processes only.

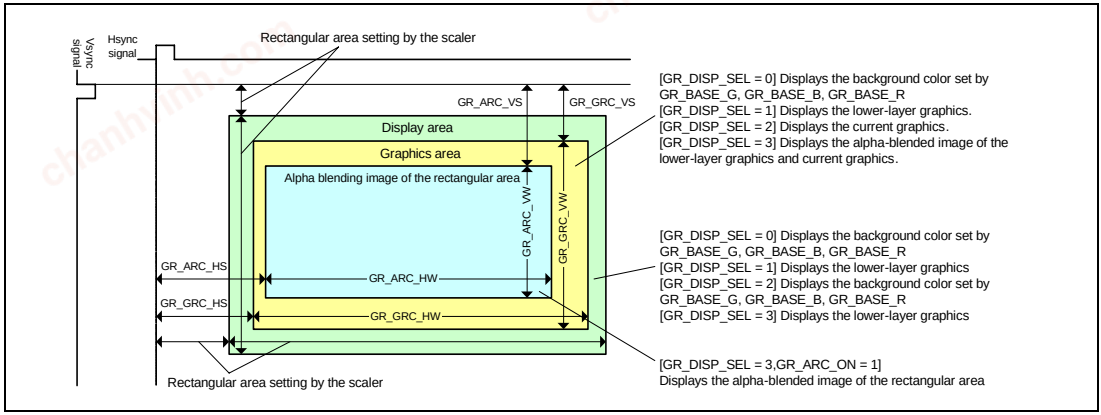

Figure 35.8 Graphic Display Types

chanhvinh.com

Figure 35.9 shows the graphics planes displayed when the GR_DISP_SEL bits are set to 3.

For correspondence between the lower-layer graphics and the current graphics, see figure 35.1.

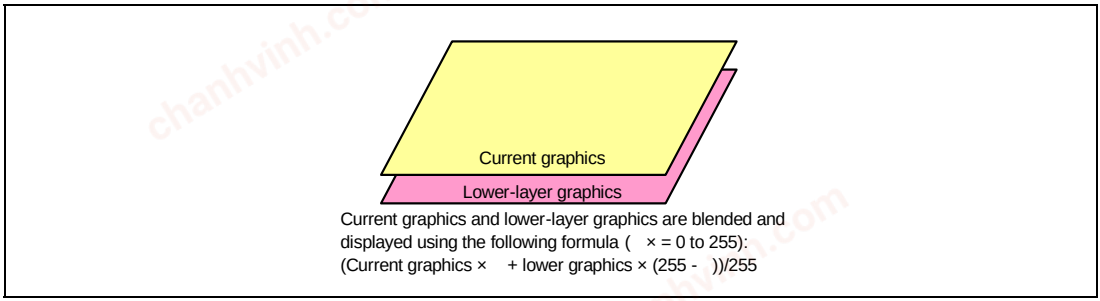

Figure 35.9 Graphics Planes with GR_DISP_SEL Set to 3

Table 35.19 Alpha Blending Setting

Register Name	Bit Name	Initial Value	Description
GR_AB1	GR_DISP_SEL[1:0]	0	Selects the graphics display mode. 0: Background color display 1: Lower-layer graphics display 2: Current graphics display 3: Blended display of lower-layer graphics and current graphics*[1]
GR_AB1	GR_ARC_ON	0	Turns on/off alpha blending in a rectangular area.*[2] 0: Off 1: On
GR_AB7	GR_CK_ON	0	Turns on/off CLUT-index/RGB-index chroma-key processing. 0: Off 1: On

Notes: 1. The graphics 1 process supports the chroma key process only. When performing chroma key processing, set the α value for converting the pixels to be subjected to chroma key processing, and the α value of the pixels not to be subjected to the chroma key processing to 255 to display the current graphics only.

2. This function is supported only for the graphics 2 and 3 processes. This bit is not provided for the graphics 1 process.

chanhvinh.com

35.1.7 Background Color Display Processing

The color set with the GR_BASE_G[7:0], GR_BASE_B[7:0], and GR_BASE_R[7:0] bits is displayed.

G output = GR_BASE_G

B output = GR_BASE_B

R output = GR_BASE_R

Table 35.20 Background Color Setting

Register Name	Bit Name	Initial Value	Description
GR_BASE	GR_BASE_G[7:0]	0	Background color G signal G: 8 bits; unsigned (0 to 255 [LSB])
GR_BASE	GR_BASE_B[7:0]	0	Background color B signal B: 8 bits; unsigned (0 to 255 [LSB])
GR_BASE	GR_BASE_R[7:0]	0	Background color R signal R: 8 bits; unsigned (0 to 255 [LSB])

35.1.8 Lower-Layer Graphics Display Processing

The lower-layer graphics are displayed as follows:

G output = G input of lower-layer graphics

B output = B input of lower-layer graphics

R output = R input of lower-layer graphics

35.1.9 Current Graphics Display Processing

The current graphics are displayed as follows:

G output = G input of current graphics

B output = B input of current graphics

R output = R input of current graphics

chanhvinh.com

35.1.10 Display with Alpha Blending in a Rectangular Area

The rectangular area subjected to alpha blending is set with the GR_ARC_HS[10:0], GR_ARC_HW[10:0], GR_ARC_VS[10:0], and GR_ARC_VW[10:0] bits based on the rising edges of the Hsync and Vsync signals. This function is not supported for the graphics 1 process.

Figure 35.10 shows the rectangular area setting for alpha blending.

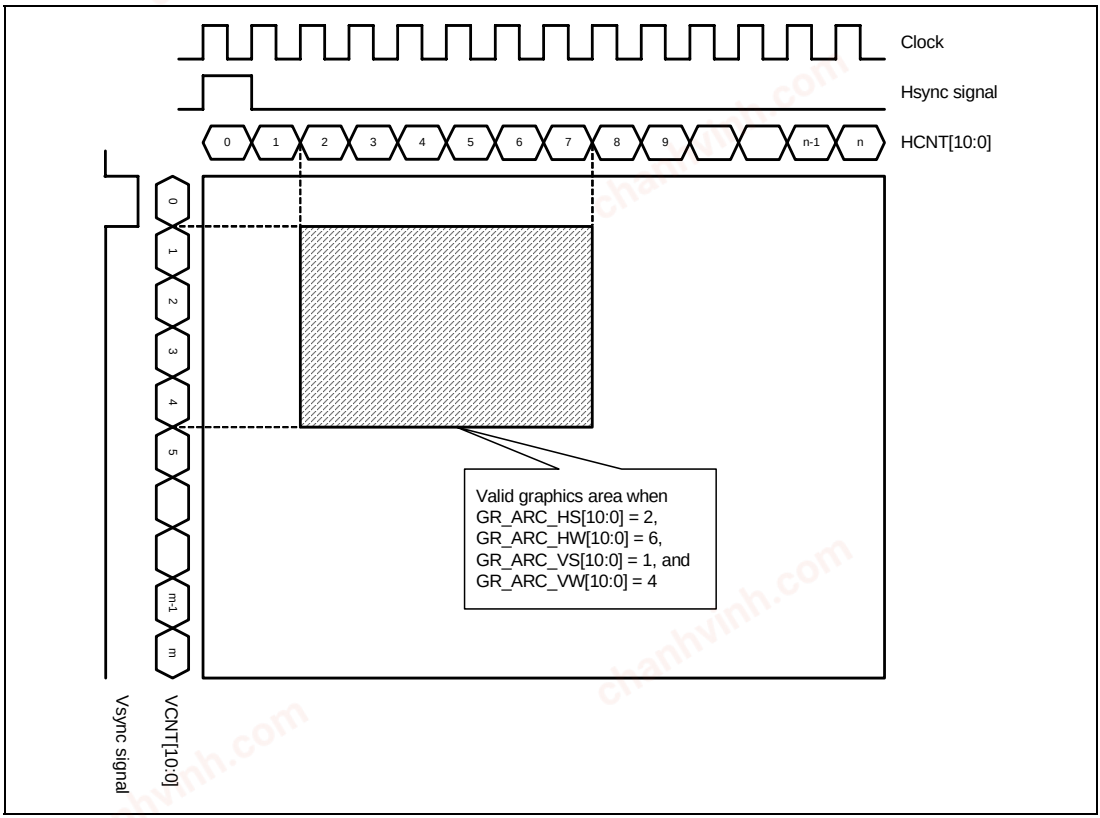

Figure 35.10 Rectangular Area Setting for Alpha Blending

The frame line of graphics area can be displayed by setting the GR_ARC_DISP_ON bit to 1.

chanhvinh.com

Table 35.21 Setting of Rectangular Area for Alpha Blending

Register Name	Bit Name	Initial Value	Description
GR_AB5	GR_ARC_HS[10:0]	0	Sets the horizontal start position of the valid image area for alpha blending in a rectangular area.
GR_AB5	GR_ARC_HW[10:0]	0	Sets the horizontal width of the valid image area for alpha blending in a rectangular area.
GR_AB4	GR_ARC_VS[10:0]	0	Sets the vertical start position of the valid image area for alpha blending in a rectangular area.
GR_AB4	GR_ARC_VW[10:0]	0	Sets the vertical width of the valid image area for alpha blending in a rectangular area.
GR_AB1	GR_ARC_DISP_ON	0	Turns on/off frame-line display of the image area for alpha blending in a rectangular area. 0: Frame-line display off 1: Frame-line display on

In alpha blending in a rectangular area, the current graphics are faded in or out by setting the fade-in or fade-out coefficients with the GR_ARC_DEF[7:0], GR_ARC_MODE, GR_ARC_COEF[7:0], and GR_ARC_RATE[7:0] bits.

First, the value of the GR_ARC_DEF[7:0] bits is assigned to the α value.

Then, each time the Vsync signal rises for the number of times set with the GR_ARC_RATE[7:0] bits, the value of the GR_ARC_COEF[7:0] bit is added to or subtracted from the α value.

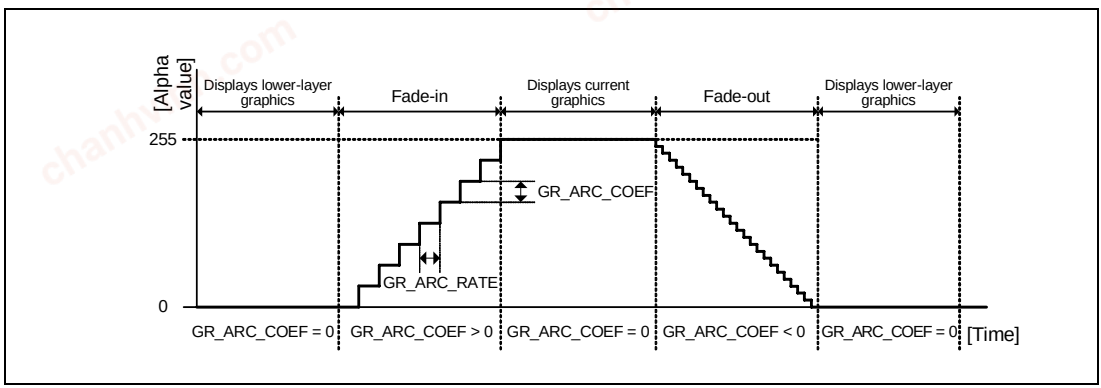

Figure 35.11 Fade In and Fade Out

chanhvinh.com

Table 35.22 Setting for Alpha Blending in a Rectangular Area

Register Name	Bit Name	Initial Value	Description
GR_AB7	GR_ARC_DEF[7:0]	0	Sets the initial alpha value for alpha blending in a rectangular area. Note: The initial α value cannot be changed during addition or subtraction (GR_ARC_ST = 1). To change the value during the above condition, the alpha blending in a rectangular area should be off (GR_ARC_ON = 0).
GR_AB6	GR_ARC_MODE	0	Alpha Blending Mode in Rectangular Area 0: Addition 1: Subtraction
GR_AB6	GR_ARC_COEF[7:0]	0	Sets the alpha coefficient for alpha blending in a rectangular area. (0 to 255) [7:0]: Variation (absolute value)
GR_AB6	GR_ARC_RATE[7:0]	0	Sets the frame rate for alpha blending in a rectangular area.
GR_MON	GR_ARC_ST	—	Status Flag for Alpha Blending in Rectangular Area 0: Addition or subtraction has been completed. (α value is 0 or 255) 1: Addition or subtraction is in progress.

The values specified with the following expressions are used in the alpha blending calculation described in section 35.1.14, Alpha Blending Calculation.

α value = Fade-in/out coefficient

G value = G input of the current graphics

B value = B input of the current graphics

R value = R input of the current graphics

chanhvinh.com

35.1.11 RGB-Index Chroma-Key Processing

The pixels that satisfy all the expressions below are subjected to RGB-index chroma-key processing.

G input of the current graphics = GR_CK_KG

B input of the current graphics = GR_CK_KB

R input of the current graphics = GR_CK_KR

In RGB-index chroma-key processing, the values specified with the following expressions are used in the alpha blending calculation described in section 35.1.14, Alpha Blending Calculation.

- In αRGB1555 format (when GR_FORMAT[3:0] = 2)

  α value = (GR_A1 or GR_A0 when α input of the current graphics is 1 or 0, respectively)

  G value = GR_CK_G

  B value = GR_CK_B

  R value = GR_CK_R

- In other formats (when GR_FORMAT[3:0] = 0, 1, 3, or 4)

  α value = GR_CK_A

  G value = GR_CK_G

  B value = GR_CK_B

  R value = GR_CK_R

For the pixels that are not subjected to RGB-index chroma-key processing, the values specified with the following expressions are used in the alpha blending calculation described in section 35.1.14, Alpha Blending Calculation.

α value = α input of the current graphics

G value = G input of the current graphics

B value = B input of the current graphics

R value = R input of the current graphics

chanhvinh.com

Table 35.23 Setting for RGB-Index Chroma-Key Processing

Register Name	Bit Name	Initial Value	Description
GR_AB8	GR_CK_KG[7:0]	0	G Signal for RGB-Index Chroma-Key Processing G: 8 bits; unsigned (0 to 255 [LSB])
GR_AB8	GR_CK_KB[7:0]	0	B Signal for RGB-Index Chroma-Key Processing B: 8 bits; unsigned (0 to 255 [LSB])
GR_AB8	GR_CK_KR[7:0]	0	R Signal for RGB-Index Chroma-Key Processing R: 8 bits; unsigned (0 to 255 [LSB])
GR_AB9	GR_CK_A[7:0]	0	Replaced Alpha Signal after RGB-Index Chroma-Key Processing* α: 8 bits; unsigned (0 to 255 [LSB])
GR_AB9	GR_CK_G[7:0]	0	Replaced G Signal after RGB-Index Chroma-Key Processing G: 8 bits; unsigned (0 to 255 [LSB])
GR_AB9	GR_CK_B[7:0]	0	Replaced B Signal after RGB-Index Chroma-Key Processing B: 8 bits; unsigned (0 to 255 [LSB])
GR_AB9	GR_CK_R[7:0]	0	Replaced R Signal after RGB-Index Chroma-Key Processing R: 8 bits; unsigned (0 to 255 [LSB])

Note: * To use this function for the graphics 1 process, the alpha value should be set to 255.

chanhvinh.com

35.1.12 CLUT-Index Chroma-Key Processing

The pixels that satisfy the expression below are subjected to CLUT-index chroma-key processing.

CLUT input of the current graphics = GR_CK_KCLUT

In CLUT-index chroma-key processing, the values specified with the following expressions are used in the alpha blending calculation described in section 35.1.14, Alpha Blending Calculation.

- In CLUT1 format (when GR_FORMAT[3:0] = 7)

  α value = (GR_A1 or GR_A0 when CLUT input of the current graphics is 1 or 0, respectively)

  G value = (GR_G1 or GR_G0 when CLUT input of the current graphics is 1 or 0, respectively)

  B value = (GR_B1 or GR_B0 when CLUT input of the current graphics is 1 or 0, respectively)

  R value = (GR_R1 or GR_R0 when CLUT input of the current graphics is 1 or 0, respectively)

- In other formats (when GR_FORMAT[3:0] = 5 or 6)

  α value = GR_CK_A

  G value = GR_CK_G

  B value = GR_CK_B

  R value = GR_CK_R

For the pixels that are not subjected to CLUT-index chroma-key processing, the values specified with the following expressions are used in the alpha blending calculation described in section 35.1.14, Alpha Blending Calculation.

α value = α input of the current graphics

G value = G input of the current graphics

B value = B input of the current graphics

R value = R input of the current graphics

chanhvinh.com

Table 35.24 Setting for CLUT-Index Chroma-Key Processing

Register Name	Bit Name	Initial Value	Description
GR_AB8	GR_CK_KCLUT[7:0]	0	CLUT Signal for CLUT-Index Chroma-Key Processing CLUT: 8 bits; unsigned (0 to 255 [LSB])
GR_AB10	GR_A0[7:0]	0	CLUT1 α0 Signal* Replaced with α signal when in the CLUT1 format and CLUT1= 0. Replaced with α signal when in the αRGB1555 format and α = 0.
GR_AB10	GR_G0[7:0]	0	CLUT1 G0 Signal Replaced with G signal when in the CLUT1 format and CLUT1 = 0.
GR_AB10	GR_B0[7:0]	0	CLUT1 B0 Signal Replaced with B signal when in the CLUT1 format and CLUT1 = 0.
GR_AB10	GR_R0[7:0]	0	CLUT1 R0 Signal Replaced with R signal when in the CLUT1 format and CLUT1 = 0.
GR_AB11	GR_A1[7:0]	0	CLUT1 α1 Signal* Replaced with α signal when in the CLUT1 format and CLUT1 = 1. Replaced with α signal when in the αRGB1555 format and α = 1.
GR_AB11	GR_G1[7:0]	0	CLUT1 G1 Signal Replaced with G signal when in the CLUT1 format and CLUT1 = 1.
GR_AB11	GR_B1[7:0]	0	CLUT1 B1 Signal Replaced with B signal when in the CLUT1 format and CLUT1 = 1.
GR_AB11	GR_R1[7:0]	0	CLUT1 R1 Signal Replaced with R signal when in the CLUT1 format and CLUT1 = 1.

Note: * To use this function for the graphics 1 process, the alpha value should be set to 255.

chanhvinh.com

35.1.13 Display with Alpha Blending in One-Pixel Units

In the alpha blending in one-pixel units, the values specified with the following expressions are used in the alpha blending calculation described in section 35.1.14, Alpha Blending Calculation.

α value = α input of the current graphics

G value = G input of the current graphics

B value = B input of the current graphics

R value = R input of the current graphics

35.1.14 Alpha Blending Calculation

Alpha blending of two input signals is performed using the α value as described below.

G output = (G value × α value + G input of the lower-layer graphics × (255 − α value)) ÷ 255

B output = (B value × α value + B input of the lower-layer graphics × (255 − α value)) ÷ 255

R output = (R value × α value + R input of the lower-layer graphics × (255 − α value)) ÷ 255

35.1.15 CLUT Table

When the signal format is CLUT8 or CLUT4, the format is converted to αRGB8888 based on the CLUT table. When the format is CLUT1, it is converted to αRGB8888 based on the register value.

Figure 35.12 shows data arrangement in the CLUT table.

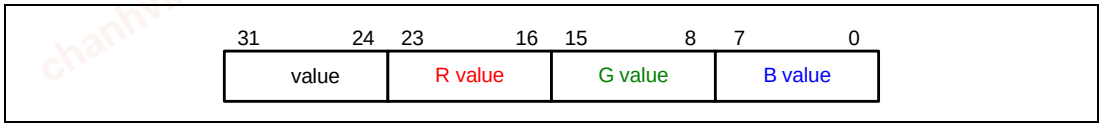

Figure 35.12 Data Arrangement in CLUT Table

chanhvinh.com

The CLUT tables are arranged in the following addresses.

Graphics 1 CLUT table: H'FFFF6000 to H'FFFF63FF (For CLUT4, addresses H'FFFF6000 to H'FFFF603F are valid.)

Graphics 2 CLUT table: H'FFFF6400 to H'FFFF67FF (For CLUT4, addresses H'FFFF6400 to H'FFFF643F are valid.)

Graphics 3 CLUT table: H'FFFF6800 to H'FFFF6BFF (For CLUT4, addresses H'FFFF6800 to H'FFFF683F are valid.)

Two CLUT tables (CLUT table 0, CLUT table 1) on the different planes are allocated to the same address and one of the tables is selected with the GR_CLT_SEL bit. This allows rewriting one CLUT table when this module refers to the other CLUT table.

Table 35.25 CLUT Table Selection

Register Name	Bit Name	Initial Value	Description
GR_CLUT	GR_CLT_SEL	0	CLUT Table Select Signal 0: Selects CLUT table 0. The format is converted to αRGB8888 based on the CLUT table 0. CLUT table 1 can be read from or written to by the CPU. 1: Selects CLUT table 1. The format is converted to αRGB8888 based on the CLUT table 1. CLUT table 0 can be read from or written to by the CPU.

chanhvinh.com

35.2 Register Descriptions

Tables 35.26 to 35.28 show the register configuration.

- Symbols used in Register Description:

  Initial value: Register value after a reset
  —: Undefined value
  R/W: Readable/writable. The written value can be read.
  R/WC0: Readable/writable. Writing 0 initializes the bit. Writing 1 is ignored.
  R/WC1: Readable/writable. Writing 1 initializes the bit. Writing 0 is ignored.
  R: Read-only. The write value should always be 0.
  —/W: Write-only. The read value is undefined.

Table 35.26 shows the register configuration for the graphics 2 process.

Table 35.27 shows the register configuration for the graphics 3 process.

Table 35.28 shows the CLUT table configuration.

The register configuration for the graphics 1 process is described in section 33, Video Display Controller 4 (3): Scaler.

Table 35.26 Register Configuration of the Image Synthesizer (Graphics 2 Process)

Name	Abbreviation	R/W	Initial Value	Address	Access Size
Graphics 2 register update control register	GR2_UPDATE	R/WC1	H'0000 0000	H'FFFF 7700	32/16
Frame buffer read control register (Graphics 2)	GR2_FLM_RD	R/W	H'0000 0000	H'FFFF 7704	32/16
Frame buffer control register 1 (Graphics 2)	GR2_FLM1	R/W	H'0000 0000	H'FFFF 7708	32/16
Frame buffer control register 2 (Graphics 2)	GR2_FLM2	R/W	H'0000 0000	H'FFFF 770C	32/16
Frame buffer control register 3 (Graphics 2)	GR2_FLM3	R/W	H'0000 0000	H'FFFF 7710	32/16
Frame buffer control register 4 (Graphics 2)	GR2_FLM4	R/W	H'0000 0000	H'FFFF 7714	32/16

chanhvinh.com

Name	Abbreviation	R/W	Initial Value	Address	Access Size
Frame buffer control register 5 (Graphics 2)	GR2_FLM5	R/W	H'0000 03FF	H'FFFF 7718	32/16
Frame buffer control register 6 (Graphics 2)	GR2_FLM6	R/W	H'0000 0000	H'FFFF 771C	32/16
Alpha blending control register 1 (Graphics 2)	GR2_AB1	R/W	H'0000 0000	H'FFFF 7720	32/16
Alpha blending control register 2 (Graphics 2)	GR2_AB2	R/W	H'0000 0000	H'FFFF 7724	32/16
Alpha blending control register 3 (Graphics 2)	GR2_AB3	R/W	H'0000 0000	H'FFFF 7728	32/16
Alpha blending control register 4 (Graphics 2)	GR2_AB4	R/W	H'0000 0000	H'FFFF 772C	32/16
Alpha blending control register 5 (Graphics 2)	GR2_AB5	R/W	H'0000 0000	H'FFFF 7730	32/16
Alpha blending control register 6 (Graphics 2)	GR2_AB6	R/W	H'0000 0000	H'FFFF 7734	32/16
Alpha blending control register 7 (Graphics 2)	GR2_AB7	R/W	H'00FF 0000	H'FFFF 7738	32/16
Alpha blending control register 8 (Graphics 2)	GR2_AB8	R/W	H'0000 0000	H'FFFF 773C	32/16
Alpha blending control register 9 (Graphics 2)	GR2_AB9	R/W	H'0000 0000	H'FFFF 7740	32/16
Alpha blending control register 10 (Graphics 2)	GR2_AB10	R/W	H'0000 0000	H'FFFF 7744	32/16
Alpha blending control register 11 (Graphics 2)	GR2_AB11	R/W	H'0000 0000	H'FFFF 7748	32/16
Background color control register (Graphics 2)	GR2_BASE	R/W	H'0000 0000	H'FFFF 774C	32/16
CLUT table control register (Graphics 2)	GR2_CLUT	R/W	H'0000 0000	H'FFFF 7750	32/16
Status monitor register (Graphics 2)	GR2_MON	R	H'0000 0000	H'FFFF 7754	32/16

chanhvinh.com

Table 35.27 Register Configuration of the Image Synthesizer (Graphics 3 Process)

Name	Abbreviation	R/W	Initial Value	Address	Access Size
Graphics 3 register update control register	GR3_UPDATE	R/WC1	H'0000 0000	H'FFFF 7780	32/16
Frame buffer read control register (Graphics 3)	GR3_FLM_RD	R/W	H'0000 0000	H'FFFF 7784	32/16
Frame buffer control register 1 (Graphics 3)	GR3_FLM1	R/W	H'0000 0000	H'FFFF 7788	32/16
Frame buffer control register 2 (Graphics 3)	GR3_FLM2	R/W	H'0000 0000	H'FFFF 778C	32/16
Frame buffer control register 3 (Graphics 3)	GR3_FLM3	R/W	H'0000 0000	H'FFFF 7790	32/16
Frame buffer control register 4 (Graphics 3)	GR3_FLM4	R/W	H'0000 0000	H'FFFF 7794	32/16
Frame buffer control register 5 (Graphics 3)	GR3_FLM5	R/W	H'0000 03FF	H'FFFF 7798	32/16
Frame buffer control register 6 (Graphics 3)	GR3_FLM6	R/W	H'0000 0000	H'FFFF 779C	32/16
Alpha blending control register 1 (Graphics 3)	GR3_AB1	R/W	H'0000 0000	H'FFFF 77A0	32/16
Alpha blending control register 2 (Graphics 3)	GR3_AB2	R/W	H'0000 0000	H'FFFF 77A4	32/16
Alpha blending control register 3 (Graphics 3)	GR3_AB3	R/W	H'0000 0000	H'FFFF 77A8	32/16
Alpha blending control register 4 (Graphics 3)	GR3_AB4	R/W	H'0000 0000	H'FFFF 77AC	32/16
Alpha blending control register 5 (Graphics 3)	GR3_AB5	R/W	H'0000 0000	H'FFFF 77B0	32/16
Alpha blending control register 6 (Graphics 3)	GR3_AB6	R/W	H'0000 0000	H'FFFF 77B4	32/16
Alpha blending control register 7 (Graphics 3)	GR3_AB7	R/W	H'00FF 0000	H'FFFF 77B8	32/16
Alpha blending control register 8 (Graphics 3)	GR3_AB8	R/W	H'0000 0000	H'FFFF 77BC	32/16
Alpha blending control register 9 (Graphics 3)	GR3_AB9	R/W	H'0000 0000	H'FFFF 77C0	32/16

chanhvinh.com

Name	Abbreviation	R/W	Initial Value	Address	Access Size
Alpha blending control register 10 (Graphics 3)	GR3_AB10	R/W	H'0000 0000	H'FFFF 77C4	32/16
Alpha blending control register 11 (Graphics 3)	GR3_AB11	R/W	H'0000 0000	H'FFFF 77C8	32/16
Background color control register (Graphics 3)	GR3_BASE	R/W	H'0000 0000	H'FFFF 77CC	32/16
CLUT table and interrupt control register (Graphics 3)	GR3_CLUT_INT	R/W	H'0000 0000	H'FFFF 77D0	32/16
Status monitor register (Graphics 3)	GR3_MON	R	H'0000 0000	H'FFFF 77D4	32/16

Table 35.28 CLUT Table Configuration

Name	Abbreviation	R/W	Initial Value	Address	Access Size
Graphics 1 CLUT table	GR1_CLUT	R/W	—	H'FFFF 6000 to H'FFFF 63FF	32
Graphics 2 CLUT table	GR2_CLUT	R/W	—	H'FFFF 6400 to H'FFFF 67FF	32
Graphics 3 CLUT table	GR3_CLUT	R/W	—	H'FFFF 6800 to H'FFFF 6BFF	32

chanhvinh.com

35.2.1 Graphics 2 Register Update Control Register (GR2_UPDATE)

Bit:	31	30	29	28	27	26	25	24	23	22	21	20	19	18	17	16
	—	—	—	—	—	—	—	—	—	—	—	—	—	—	—	—
Initial value:	0	0	0	0	0	0	0	0	0	0	0	0	0	0	0	0
R/W:	R	R	R	R	R	R	R	R	R	R	R	R	R	R	R	R

Bit:	15	14	13	12	11	10	9	8	7	6	5	4	3	2	1	0
	—	—	—	—	—	—	—	—	—	—	—	GR2_P_VEN	—	—	—	GR2_IBUS_VEN
Initial value:	0	0	0	0	0	0	0	0	0	0	0	0	0	0	0	0
R/W:	R	R	R	R	R	R	R	R	R	R	R	R/WC1	R	R	R	R/WC1

Bit	Bit Name	Initial Value	R/W	Description
31 to 5	—	All 0	R	Reserved These bits are always read as 0. The write value should always be 0.
4	GR2_P_VEN	0	R/WC1	Graphics Display Register Update 0: Registers are not updated. 1: Registers are updated at the rising edge of the Vsync.
3 to 1	—	All 0	R	Reserved These bits are always read as 0. The write value should always be 0.
0	GR2_IBUS_VEN	0	R/WC1	Frame Buffer Read Control Register Update 0: Registers are not updated. 1: Registers are updated at the rising edge of the Vsync.

chanhvinh.com

35.2.2 Frame Buffer Read Control Register (Graphics 2) (GR2_FLM_RD)

Bit:	31	30	29	28	27	26	25	24	23	22	21	20	19	18	17	16
	—	—	—	—	—	—	—	—	—	—	—	—	—	—	—	—
Initial value:	0	0	0	0	0	0	0	0	0	0	0	0	0	0	0	0
R/W:	R	R	R	R	R	R	R	R	R	R	R	R	R	R	R	R

Bit:	15	14	13	12	11	10	9	8	7	6	5	4	3	2	1	0
	—	—	—	—	—	—	—	—	—	—	—	—	—	—	—	GR2_R_ENB
Initial value:	0	0	0	0	0	0	0	0	0	0	0	0	0	0	0	0
R/W:	R	R	R	R	R	R	R	R	R	R	R	R	R	R	R	R/W

Bit	Bit Name	Initial Value	R/W	Description
31 to 1	—	All 0	R	Reserved These bits are always read as 0. The write value should always be 0.
0	GR2_R_ENB	0	R/W	Frame Buffer Read Enable 0: Frame buffer reading is disabled. 1: Frame buffer reading is enabled.

Note: This register is updated when GR2_IBUS_VEN in GR2_UPDATE is 1.

chanhvinh.com

35.2.3 Frame Buffer Control Register 1 (Graphics 2) (GR2_FLM1)

Bit:	31	30	29	28	27	26	25	24	23	22	21	20	19	18	17	16
	—	—	—	—	—	—	—	—	—	—	—	—	—	—	—	GR2_LN_OFF_DIR
Initial value:	0	0	0	0	0	0	0	0	0	0	0	0	0	0	0	0
R/W:	R	R	R	R	R	R	R	R	R	R	R	R	R	R	R	R/W

Bit:	15	14	13	12	11	10	9	8	7	6	5	4	3	2	1	0
	—	—	—	—	—	—	GR2_FLM_SEL[1:0]		—	—	—	—	—	—	—	GR2_BST_MD
Initial value:	0	0	0	0	0	0	0	0	0	0	0	0	0	0	0	0
R/W:	R	R	R	R	R	R	R/W	R/W	R	R	R	R	R	R	R	R/W

Bit	Bit Name	Initial Value	R/W	Description
31 to 17	—	All 0	R	Reserved These bits are always read as 0. The write value should always be 0.
16	GR2_LN_OFF_DIR	0	R/W	Selects the line offset address direction of the frame buffer. 0: Increments the address by the line offset address. 1: Decrements the address by the line offset address.
15 to 10	—	All 0	R	Reserved These bits are always read as 0. The write value should always be 0.
9, 8	GR2_FLM_SEL[1:0]	0	R/W	Selects a frame buffer address setting signal. 0: Selects frame 0. 1: Selects register GR2_FLM_NUM. 2: Selects frame 0. 3: Setting prohibited
7 to 1	—	All 0	R	Reserved These bits are always read as 0. The write value should always be 0.
0	GR2_BST_MD	0	R/W	Frame Buffer Burst Transfer Mode 0: 32-byte transfer 1: 128- byte transfer

Note: GR2_LN_OFF_DIR and GR2_FLM_SEL are updated when GR2_IBUS_VEN in GR2_UPDATE is 1.
GR2_BST_MD is updated when GR2_IBUS_VEN is 1, and GR2_IBUS_VEN and GR2_P_VEN in GR2_UPDATE are 1.

chanhvinh.com

35.2.4 Frame Buffer Control Register 2 (Graphics 2) (GR2_FLM2)

Bit:	31	30	29	28	27	26	25	24	23	22	21	20	19	18	17	16
	GR2_BASE[31:16]															
Initial value:	0	0	0	0	0	0	0	0	0	0	0	0	0	0	0	0
R/W:	R/W	R/W	R/W	R/W	R/W	R/W	R/W	R/W	R/W	R/W	R/W	R/W	R/W	R/W	R/W	R/W

Bit:	15	14	13	12	11	10	9	8	7	6	5	4	3	2	1	0
	GR2_BASE[15:0]															
Initial value:	0	0	0	0	0	0	0	0	0	0	0	0	0	0	0	0
R/W:	R/W	R/W	R/W	R/W	R/W	R/W	R/W	R/W	R/W	R/W	R/W	R/W	R/W	R/W	R/W	R/W

Bit	Bit Name	Initial Value	R/W	Description
31 to 0	GR2_BASE [31:0]	0	R/W	Frame Buffer Base Address (upper) Sets the start address of the frame buffer where frame data is to be stored. GR_BASE[4:3] and GR_BASE[6:3] are referred to during 32-byte burst transfer and 128-byte burst transfer, respectively, to skip the start line data. The lower 3 bits should be fixed to 000.

Note: This register is updated when GR2_IBUS_VEN and GR2_P_VEN in GR2_UPDATE are 1.

chanhvinh.com

35.2.5 Frame Buffer Control Register 3 (Graphics 2) (GR2_FLM3)

Bit:	31	30	29	28	27	26	25	24	23	22	21	20	19	18	17	16
	—	GR2_LN_OFF[14:0]														
Initial value:	0	0	0	0	0	0	0	0	0	0	0	0	0	0	0	0
R/W:	R	R/W	R/W	R/W	R/W	R/W	R/W	R/W	R/W	R/W	R/W	R/W	R/W	R/W	R/W	R/W

Bit:	15	14	13	12	11	10	9	8	7	6	5	4	3	2	1	0
	—	—	—	—	—	—	GR2_FLM_NUM[9:0]									
Initial value:	0	0	0	0	0	0	0	0	0	0	0	0	0	0	0	0
R/W:	R	R	R	R	R	R	R/W	R/W	R/W	R/W	R/W	R/W	R/W	R/W	R/W	R/W

Bit	Bit Name	Initial Value	R/W	Description
31	—	0	R	Reserved This bit is always read as 0. The write value should always be 0.
30 to 16	GR2_LN_OFF[14:0]	0	R/W	Frame Buffer Line Offset Address Sets the line offset address for calculating the start address of each line. Line 0:GR2_BASE Line 1:GR2_BASE + GR2_LN_OFF × 1 : Line n: GR2_BASE + GR2_LN_OFF × n For 32 byte transfer, the lower 5 bits should be fixed to 0_0000. For 128 byte transfer, the lower 7 bits should be fixed to 000_0000.
15 to 10	—	All 0	R	Reserved These bits are always read as 0. The write value should always be 0.
9 to 0	GR2_FLM_NUM[9:0]	0	R/W	Frame Number of Frame Buffer Manually set the frame number when GR2_FLM_SEL = 1.

Note: This register is updated when GR2_IBUS_VEN in GR2_UPDATE is 1.

chanhvinh.com

35.2.6 Frame Buffer Control Register 4 (Graphics 2) (GR2_FLM4)

Bit:	31	30	29	28	27	26	25	24	23	22	21	20	19	18	17	16
	—	—	—	—	—	—	—	—	—	GR2_FLM_OFF[22:16]						
Initial value:	0	0	0	0	0	0	0	0	0	0	0	0	0	0	0	0
R/W:	R	R	R	R	R	R	R	R	R	R/W	R/W	R/W	R/W	R/W	R/W	R/W

Bit:	15	14	13	12	11	10	9	8	7	6	5	4	3	2	1	0
	GR2_FLM_OFF[15:0]															
Initial value:	0	0	0	0	0	0	0	0	0	0	0	0	0	0	0	0
R/W:	R/W	R/W	R/W	R/W	R/W	R/W	R/W	R/W	R/W	R/W	R/W	R/W	R/W	R/W	R/W	R/W

Bit	Bit Name	Initial Value	R/W	Description
31 to 23	—	All 0	R	Reserved These bits are always read as 0. The write value should always be 0.
22 to 0	GR2_FLM_OFF[22:0]	0	R/W	Frame Buffer Frame Offset Address (upper) Specifies the frame offset address used for calculating the start address of each frame buffer when more than one buffer is used. Buffer 0: GR2_BASE Buffer 1: GR2_BASE + GR2_FLM_OFF × 1 : Buffer n: GR2_BASE + GR2_FLM_OFF × n For 32 byte transfer, the lower 5 bits should be fixed to 0_0000. For 128 byte transfer, the lower 7 bits should be fixed to 000_0000.

Note: This register is updated when GR2_IBUS_VEN in GR2_UPDATE is 1.

chanhvinh.com

35.2.7 Frame Buffer Control Register 5 (Graphics 2) (GR2_FLM5)

Bit:	31	30	29	28	27	26	25	24	23	22	21	20	19	18	17	16
	—	—	—	—	—	—	GR2_FLM_LNUM[9:0]									
Initial value:	0	0	0	0	0	0	0	0	0	0	0	0	0	0	0	0
R/W:	R	R	R	R	R	R	R/W	R/W	R/W	R/W	R/W	R/W	R/W	R/W	R/W	R/W

Bit:	15	14	13	12	11	10	9	8	7	6	5	4	3	2	1	0
	—	—	—	—	—	—	GR2_FLM_LOOP[9:0]									
Initial value:	0	0	0	0	0	0	1	1	1	1	1	1	1	1	1	1
R/W:	R	R	R	R	R	R	R/W	R/W	R/W	R/W	R/W	R/W	R/W	R/W	R/W	R/W

Bit	Bit Name	Initial Value	R/W	Description
31 to 26	—	All 0	R	Reserved These bits are always read as 0. The write value should always be 0.
25 to 16	GR2_FLM_LNUM[9:0]	0	R/W	Sets number of lines in a frame The number of lines is (GR2_FLM_LNUM + 1).
15 to 10	—	All 0	R	Reserved These bits are always read as 0. The write value should always be 0.
9 to 0	GR2_FLM_LOOP[9:0]	1023	R/W	Number of lines when reading the addresses repeatedly by returning to the start address after reaching the end address. The number of lines is (GR2_FLM_LOOP + 1).

Note: This register is updated when GR2_IBUS_VEN in GR2_UPDATE is 1.

chanhvinh.com

35.2.8 Frame Buffer Control Register 6 (Graphics 2) (GR2_FLM6)

Bit:	31	30	29	28	27	26	25	24	23	22	21	20	19	18	17	16
	GR2_FORMAT[3:0]				—	—	GR2_HW[9:0]									
Initial value:	0	0	0	0	0	0	0	0	0	0	0	0	0	0	0	0
R/W:	R/W	R/W	R/W	R/W	R	R	R/W	R/W	R/W	R/W	R/W	R/W	R/W	R/W	R/W	R/W

Bit:	15	14	13	12	11	10	9	8	7	6	5	4	3	2	1	0
	—	—	—	GR2_ENDIAN_ON	—	—	—	—	—	—	GR2_STA_POS[5:0]					
Initial value:	0	0	0	0	0	0	0	0	0	0	0	0	0	0	0	0
R/W:	R	R	R	R/W	R	R	R	R	R	R	R/W	R/W	R/W	R/W	R/W	R/W

Bit	Bit Name	Initial Value	R/W	Description
31 to 28	GR2_FORMAT [3:0]	0	R/W	Sets the format of the frame buffer read signal. 0: RGB565 1: RGB888 2: αRGB1555 3: αRGB4444 4: αRGB8888 5: CLUT8 6: CLUT4 7: CLUT1 8 to 15: Setting prohibited
27, 26	—	All 0	R	Reserved These bits are always read as 0. The write value should always be 0.
25 to 16	GR2_HW [9:0]	0	R/W	Sets the width of the horizontal valid period. The width is (GR2_HW + 1) pixels. Note: Set to 2 or greater.
15 to 13	—	All 0	R	Reserved These bits are always read as 0. The write value should always be 0.

chanhvinh.com

Bit	Bit Name	Initial Value	R/W	Description
12	GR2_ENDIAN_ON	0	R/W	Turns on/off the endian control of data read from buffer. 0: Off 1: On
11 to 6	—	All 0	R	Reserved These bits are always read as 0. The write value should always be 0.
5 to 0	GR2_STA_POS[5:0]	0	R/W	Sets the amount of data to be skipped through. Specifically data amount equal to the amount indicated by GR2_STA_POS is skipped from the start of the line.

Note: GR2_ENDIAN_ON and GR2_STA_POS are updated when GR2_P_VEN in GR2_UPDATE is 1.
GR2_FORMAT and GR2_HW are updated when GR2_IBUS_VEN and GR2_P_VEN in GR2_UPDATE are 1.

chanhvinh.com

35.2.9 Alpha Blending Control Register 1 (Graphics 2) (GR2_AB1)

Bit:	31	30	29	28	27	26	25	24	23	22	21	20	19	18	17	16
	—	—	—	—	—	—	—	—	—	—	—	—	—	—	—	—
Initial value:	0	0	0	0	0	0	0	0	0	0	0	0	0	0	0	0
R/W:	R	R	R	R	R	R	R	R	R	R	R	R	R	R	R	R

Bit:	15	14	13	12	11	10	9	8	7	6	5	4	3	2	1	0
	—	—	—	GR2_ ARC_ON	—	—	—	GR2_ ARC_ DISP_ON	—	—	—	GR2_ GRC_ DISP_ON	—	—	GR2_DISP_SEL[1:0]	
Initial value:	0	0	0	0	0	0	0	0	0	0	0	0	0	0	0	0
R/W:	R	R	R	R/W	R	R	R	R/W	R	R	R	R/W	R	R	R/W	R/W

Bit	Bit Name	Initial Value	R/W	Description
31 to 13	—	All 0	R	Reserved These bits are always read as 0. The write value should always be 0.
12	GR2_ARC_ ON	0	R/W	Turns on/off alpha blending in a rectangular area. 0: Off 1: On
11 to 9	—	All 0	R	Reserved These bits are always read as 0. The write value should always be 0.
8	GR2_ARC_ DISP_ON	0	R/W	Turns on/off frame-line display of the image area for alpha blending in a rectangular area. 0: Frame-line display off 1: Frame-line display on
7 to 5	—	All 0	R	Reserved These bits are always read as 0. The write value should always be 0.
4	GR2_GRC_ DISP_ON	0	R/W	Turns on/off frame-line display of the graphics image area. 0: Frame-line display off 1: Frame-line display on
3, 2	—	All 0	R	Reserved These bits are always read as 0. The write value should always be 0.

chanhvinh.com

Bit	Bit Name	Initial Value	R/W	Description
1, 0	GR2_DISP_SEL[1:0]	0	R/W	Selects the graphics display mode. 0: Background color display 1: Lower-layer graphics display 2: Current graphics display 3: Blended display of lower-layer graphics and current graphics

Note: This register is updated when GR2_P_VEN in GR2_UPDATE is 1.

35.2.10 Alpha Blending Control Register 2 (Graphics 2) (GR2_AB2)

Bit:	31	30	29	28	27	26	25	24	23	22	21	20	19	18	17	16
	—	—	—	—	—	GR2_GRC_VS[10:0]										
Initial value:	0	0	0	0	0	0	0	0	0	0	0	0	0	0	0	0
R/W:	R	R	R	R	R	R/W	R/W	R/W	R/W	R/W	R/W	R/W	R/W	R/W	R/W	R/W

Bit:	15	14	13	12	11	10	9	8	7	6	5	4	3	2	1	0
	—	—	—	—	—	GR2_GRC_VW[10:0]										
Initial value:	0	0	0	0	0	0	0	0	0	0	0	0	0	0	0	0
R/W:	R	R	R	R	R	R/W	R/W	R/W	R/W	R/W	R/W	R/W	R/W	R/W	R/W	R/W

Bit	Bit Name	Initial Value	R/W	Description
31 to 27	—	All 0	R	Reserved These bits are always read as 0. The write value should always be 0.
26 to 16	GR2_GRC_VS[10:0]	0	R/W	Sets the vertical start position of the graphics image area. Note: Set to 4 or greater lines and the result of GR2_GRC_VS + GR2_GRC_VW should be smaller than or equal to 2039 lines.
15 to 11	—	All 0	R	Reserved These bits are always read as 0. The write value should always be 0.
10 to 0	GR2_GRC_VW[10:0]	0	R/W	Sets the vertical width of the graphics image area.

Note: This register is updated when GR2_P_VEN in GR2_UPDATE is 1.

chanhvinh.com

35.2.11 Alpha Blending Control Register 3 (Graphics 2) (GR2_AB3)

Bit:	31	30	29	28	27	26	25	24	23	22	21	20	19	18	17	16
	—	—	—	—	—	GR2_GRC_HS[10:0]										
Initial value:	0	0	0	0	0	0	0	0	0	0	0	0	0	0	0	0
R/W:	R	R	R	R	R	R/W	R/W	R/W	R/W	R/W	R/W	R/W	R/W	R/W	R/W	R/W

Bit:	15	14	13	12	11	10	9	8	7	6	5	4	3	2	1	0
	—	—	—	—	—	GR2_GRC_HW[10:0]										
Initial value:	0	0	0	0	0	0	0	0	0	0	0	0	0	0	0	0
R/W:	R	R	R	R	R	R/W	R/W	R/W	R/W	R/W	R/W	R/W	R/W	R/W	R/W	R/W

Bit	Bit Name	Initial Value	R/W	Description
31 to 27	—	All 0	R	Reserved These bits are always read as 0. The write value should always be 0.
26 to 16	GR2_GRC_HS[10:0]	0	R/W	Sets the horizontal start position of the graphics image area. Note: Set to 16 or greater clocks and the result of GR2_GRC_HS + GR2_GRC_HW should be smaller than or equal to 2015 clocks.
15 to 11	—	All 0	R	Reserved These bits are always read as 0. The write value should always be 0.
10 to 0	GR2_GRC_HW[10:0]	0	R/W	Sets the horizontal width of the graphics image area. Note: For displaying an image with 1- or 2-pixel horizontal width, set GR2_HW to 2 and GR2_GRC_HW to 1 (1-pixel) or 2 (2-pixel).

Note: This register is updated when GR2_P_VEN in GR2_UPDATE is 1.

chanhvinh.com

35.2.12 Alpha Blending Control Register 4 (Graphics 2) (GR2_AB4)

Bit:	31	30	29	28	27	26	25	24	23	22	21	20	19	18	17	16
	—	—	—	—	—	GR2_ARC_VS[10:0]										
Initial value:	0	0	0	0	0	0	0	0	0	0	0	0	0	0	0	0
R/W:	R	R	R	R	R	R/W	R/W	R/W	R/W	R/W	R/W	R/W	R/W	R/W	R/W	R/W

Bit:	15	14	13	12	11	10	9	8	7	6	5	4	3	2	1	0
	—	—	—	—	—	GR2_ARC_VW[10:0]										
Initial value:	0	0	0	0	0	0	0	0	0	0	0	0	0	0	0	0
R/W:	R	R	R	R	R	R/W	R/W	R/W	R/W	R/W	R/W	R/W	R/W	R/W	R/W	R/W

Bit	Bit Name	Initial Value	R/W	Description
31 to 27	—	All 0	R	Reserved These bits are always read as 0. The write value should always be 0.
26 to 16	GR2_ARC_VS[10:0]	0	R/W	Sets the vertical start position of the valid image area for alpha blending in a rectangular area.
15 to 11	—	All 0	R	Reserved These bits are always read as 0. The write value should always be 0.
10 to 0	GR2_ARC_VW[10:0]	0	R/W	Sets the vertical width of the valid image area for alpha blending in a rectangular area.

Note: This register is updated when GR2_P_VEN in GR2_UPDATE is 1.

chanhvinh.com

35.2.13 Alpha Blending Control Register 5 (Graphics 2) (GR2_AB5)

Bit:	31	30	29	28	27	26	25	24	23	22	21	20	19	18	17	16
	—	—	—	—	—	GR2_ARC_HS[10:0]										
Initial value:	0	0	0	0	0	0	0	0	0	0	0	0	0	0	0	0
R/W:	R	R	R	R	R	R/W	R/W	R/W	R/W	R/W	R/W	R/W	R/W	R/W	R/W	R/W

Bit:	15	14	13	12	11	10	9	8	7	6	5	4	3	2	1	0
	—	—	—	—	—	GR2_ARC_HW[10:0]										
Initial value:	0	0	0	0	0	0	0	0	0	0	0	0	0	0	0	0
R/W:	R	R	R	R	R	R/W	R/W	R/W	R/W	R/W	R/W	R/W	R/W	R/W	R/W	R/W

Bit	Bit Name	Initial Value	R/W	Description
31 to 27	—	All 0	R	Reserved These bits are always read as 0. The write value should always be 0.
26 to 16	GR2_ARC_HS[10:0]	0	R/W	Sets the horizontal start position of the valid image area for alpha blending in a rectangular area.
15 to 11	—	All 0	R	Reserved These bits are always read as 0. The write value should always be 0.
10 to 0	GR2_ARC_HW[10:0]	0	R/W	Sets the horizontal width of the valid image area for alpha blending in a rectangular area.

Note: This register is updated when GR2_P_VEN in GR2_UPDATE is 1.

chanhvinh.com

35.2.14 Alpha Blending Control Register 6 (Graphics 2) (GR2_AB6)

Bit:	31	30	29	28	27	26	25	24	23	22	21	20	19	18	17	16
	—	—	—	—	—	—	—	GR2_ARC_MODE	GR2_ARC_COEF[7:0]							
Initial value:	0	0	0	0	0	0	0	0	0	0	0	0	0	0	0	0
R/W:	R	R	R	R	R	R	R	R/W	R/W	R/W	R/W	R/W	R/W	R/W	R/W	R/W

Bit:	15	14	13	12	11	10	9	8	7	6	5	4	3	2	1	0
	—	—	—	—	—	—	—	—	GR2_ARC_RATE[7:0]							
Initial value:	0	0	0	0	0	0	0	0	0	0	0	0	0	0	0	0
R/W:	R	R	R	R	R	R	R	R	R/W	R/W	R/W	R/W	R/W	R/W	R/W	R/W

Bit	Bit Name	Initial Value	R/W	Description
31 to 25	—	All 0	R	Reserved These bits are always read as 0. The write value should always be 0.
24	GR2_ARC_MODE	0	R/W	Alpha Blending Mode in Rectangular Area 0: Addition 1: Subtraction
23 to 16	GR2_ARC_COEF[7:0]	0	R/W	Sets the alpha coefficient for alpha blending in a rectangular area. (0 to 255) [7:0]: Variation (absolute value)
15 to 8	—	All 0	R	Reserved These bits are always read as 0. The write value should always be 0.
7 to 0	GR2_ARC_RATE[7:0]	0	R/W	Sets the frame rate for alpha blending in a rectangular area.

Note: This bit is updated when GR2_P_VEN in GR2_UPDATE is 1.

chanhvinh.com

35.2.15 Alpha Blending Control Register 7 (Graphics 2) (GR2_AB7)

Bit:	31	30	29	28	27	26	25	24	23	22	21	20	19	18	17	16
	—	—	—	—	—	—	—	—	GR2_ARC_DEF[7:0]							
Initial value:	0	0	0	0	0	0	0	0	1	1	1	1	1	1	1	1
R/W:	R	R	R	R	R	R	R	R	R/W	R/W	R/W	R/W	R/W	R/W	R/W	R/W

Bit:	15	14	13	12	11	10	9	8	7	6	5	4	3	2	1	0
	—	—	—	—	—	—	—	—	—	—	—	—	—	—	—	GR2_CK_ON
Initial value:	0	0	0	0	0	0	0	0	0	0	0	0	0	0	0	0
R/W:	R	R	R	R	R	R	R	R	R	R	R	R	R	R	R	R/W

Bit	Bit Name	Initial Value	R/W	Description
31 to 24	—	All 0	R	Reserved These bits are always read as 0. The write value should always be 0.
23 to 16	GR2_ARC_DEF[7:0]	255	R/W	Sets the initial alpha value for alpha blending in a rectangular area. Note: The initial α value cannot be changed during addition or subtraction (GR2_ARC_ST = 1). To change the value during the above condition, the alpha blending in a rectangular area should be off (GR_ARC2_ON = 0).
15 to 1	—	All 0	R	Reserved These bits are always read as 0. The write value should always be 0.
0	GR2_CK_ON	0	R/W	Turns on/off CLUT-index/RGB-index chroma-key processing. 0: Off 1: On

Note: This register is updated when GR2_P_VEN in GR2_UPDATE is 1.

chanhvinh.com

35.2.16 Alpha Blending Control Register 8 (Graphics 2) (GR2_AB8)

Bit:	31	30	29	28	27	26	25	24	23	22	21	20	19	18	17	16
	GR2_CK_KCLUT[7:0]								GR2_CK_KG[7:0]							
Initial value:	0	0	0	0	0	0	0	0	0	0	0	0	0	0	0	0
R/W:	R/W	R/W	R/W	R/W	R/W	R/W	R/W	R/W	R/W	R/W	R/W	R/W	R/W	R/W	R/W	R/W

Bit:	15	14	13	12	11	10	9	8	7	6	5	4	3	2	1	0
	GR2_CK_KB[7:0]								GR2_CK_KR[7:0]							
Initial value:	0	0	0	0	0	0	0	0	0	0	0	0	0	0	0	0
R/W:	R/W	R/W	R/W	R/W	R/W	R/W	R/W	R/W	R/W	R/W	R/W	R/W	R/W	R/W	R/W	R/W

Bit	Bit Name	Initial Value	R/W	Description
31 to 24	GR2_CK_KCLUT[7:0]	0	R/W	CLUT Signal for CLUT-Index Chroma-Key Processing CLUT: Unsigned 8 bits (0 to 255 [LSB])
23 to 16	GR2_CK_KG[7:0]	0	R/W	G Signal for RGB-Index Chroma-Key Processing G: Unsigned 8 bits (0 to 255 [LSB])
15 to 8	GR2_CK_KB[7:0]	0	R/W	B Signal for RGB-Index Chroma-Key Processing B: Unsigned 8 bits (0 to 255 [LSB])
7 to 0	GR2_CK_KR[7:0]	0	R/W	R Signal for RGB-Index Chroma-Key Processing R: Unsigned 8 bits (0 to 255 [LSB])

Note: This register is updated when GR2_P_VEN in GR2_UPDATE is 1.

chanhvinh.com

35.2.17 Alpha Blending Control Register 9 (Graphics 2) (GR2_AB9)

Bit:	31	30	29	28	27	26	25	24	23	22	21	20	19	18	17	16
	GR2_CK_A[7:0]								GR2_CK_G[7:0]							
Initial value:	0	0	0	0	0	0	0	0	0	0	0	0	0	0	0	0
R/W:	R/W	R/W	R/W	R/W	R/W	R/W	R/W	R/W	R/W	R/W	R/W	R/W	R/W	R/W	R/W	R/W

Bit:	15	14	13	12	11	10	9	8	7	6	5	4	3	2	1	0
	GR2_CK_B[7:0]								GR2_CK_R[7:0]							
Initial value:	0	0	0	0	0	0	0	0	0	0	0	0	0	0	0	0
R/W:	R/W	R/W	R/W	R/W	R/W	R/W	R/W	R/W	R/W	R/W	R/W	R/W	R/W	R/W	R/W	R/W

Bit	Bit Name	Initial Value	R/W	Description
31 to 24	GR2_CK_A [7:0]	0	R/W	Replaced Alpha Signal after RGB/CLUT-Index Chroma-Key Processing α: Unsigned 8 bits (0 to 255 [LSB])
23 to 16	GR2_CK_G [7:0]	0	R/W	Replaced G Signal after RGB/CLUT-Index Chroma-Key Processing G: Unsigned 8 bits (0 to 255 [LSB])
15 to 8	GR2_CK_B [7:0]	0	R/W	Replaced B Signal after RGB/CLUT-Index Chroma-Key Processing B: Unsigned 8 bits (0 to 255 [LSB])
7 to 0	GR2_CK_R [7:0]	0	R/W	Replaced R Signal after RGB/CLUT-Index Chroma-Key Processing R: Unsigned 8 bits (0 to 255 [LSB])

Note: This register is updated when GR2_P_VEN in GR2_UPDATE is 1.

chanhvinh.com

35.2.18 Alpha Blending Control Register 10 (Graphics 2) (GR2_AB10)

Bit:	31	30	29	28	27	26	25	24	23	22	21	20	19	18	17	16
	GR2_A0[7:0]								GR2_G0[7:0]							
Initial value:	0	0	0	0	0	0	0	0	0	0	0	0	0	0	0	0
R/W:	R/W	R/W	R/W	R/W	R/W	R/W	R/W	R/W	R/W	R/W	R/W	R/W	R/W	R/W	R/W	R/W

Bit:	15	14	13	12	11	10	9	8	7	6	5	4	3	2	1	0
	GR2_B0[7:0]								GR2_R0[7:0]							
Initial value:	0	0	0	0	0	0	0	0	0	0	0	0	0	0	0	0
R/W:	R/W	R/W	R/W	R/W	R/W	R/W	R/W	R/W	R/W	R/W	R/W	R/W	R/W	R/W	R/W	R/W

Bit	Bit Name	Initial Value	R/W	Description
31 to 24	GR2_A0 [7:0]	0	R/W	CLUT1 α0 Signal Replaced with α signal when in the CLUT1 format and CLUT1= 0. Replaced with α signal when in the αRGB1555 format and α = 0.
23 to 16	GR2_G0 [7:0]	0	R/W	CLUT1 G0 Signal Replaced with G signal when in the CLUT1 format and CLUT1 = 0.
15 to 8	GR2_B0 [7:0]	0	R/W	CLUT1 B0 Signal Replaced with B signal when in the CLUT1 format and CLUT1 = 0.
7 to 0	GR2_R0 [7:0]	0	R/W	CLUT1 R0 Signal Replaced with R signal when in the CLUT1 format and CLUT1 = 0.

Note: This register is updated when GR2_P_VEN in GR2_UPDATE is 1.

chanhvinh.com

35.2.19 Alpha Blending Control Register 11 (Graphics 2) (GR2_AB11)

Bit:	31	30	29	28	27	26	25	24	23	22	21	20	19	18	17	16
	GR2_A1[7:0]								GR2_G1[7:0]							
Initial value:	0	0	0	0	0	0	0	0	0	0	0	0	0	0	0	0
R/W:	R/W	R/W	R/W	R/W	R/W	R/W	R/W	R/W	R/W	R/W	R/W	R/W	R/W	R/W	R/W	R/W

Bit:	15	14	13	12	11	10	9	8	7	6	5	4	3	2	1	0
	GR2_B1[7:0]								GR2_R1[7:0]							
Initial value:	0	0	0	0	0	0	0	0	0	0	0	0	0	0	0	0
R/W:	R/W	R/W	R/W	R/W	R/W	R/W	R/W	R/W	R/W	R/W	R/W	R/W	R/W	R/W	R/W	R/W

Bit	Bit Name	Initial Value	R/W	Description
31 to 24	GR2_A1 [7:0]	0	R/W	CLUT1 α1 Signal Replaced with α signal when in the CLUT1 format and CLUT1 = 1. Replaced with α signal when in the αRGB1555 format and α = 1.
23 to 16	GR2_G1 [7:0]	0	R/W	CLUT1 G1 Signal Replaced with G signal when in the CLUT1 format and CLUT1 = 1.
15 to 8	GR2_B1 [7:0]	0	R/W	CLUT1 B1 Signal Replaced with B signal when in the CLUT1 format and CLUT1 = 1.
7 to 0	GR2_R1 [7:0]	0	R/W	CLUT1 R1 Signal Replaced with R signal when in the CLUT1 format and CLUT1 = 1.

Note: This register is updated when GR2_P_VEN in GR2_UPDATE is 1.

chanhvinh.com

35.2.20 Background Color Control Register (Graphics 2) (GR2_BASE)

Bit:	31	30	29	28	27	26	25	24	23	22	21	20	19	18	17	16
	—	—	—	—	—	—	—	—	GR2_BASE_G[7:0]							
Initial value:	0	0	0	0	0	0	0	0	0	0	0	0	0	0	0	0
R/W:	R	R	R	R	R	R	R	R	R/W	R/W	R/W	R/W	R/W	R/W	R/W	R/W

Bit:	15	14	13	12	11	10	9	8	7	6	5	4	3	2	1	0
	GR2_BASE_B[7:0]								GR2_BASE_R[7:0]							
Initial value:	0	0	0	0	0	0	0	0	0	0	0	0	0	0	0	0
R/W:	R/W	R/W	R/W	R/W	R/W	R/W	R/W	R/W	R/W	R/W	R/W	R/W	R/W	R/W	R/W	R/W

Bit	Bit Name	Initial Value	R/W	Description
31 to 24	—	All 0	R	Reserved These bits are always read as 0. The write value should always be 0.
23 to 16	GR2_BASE_G [7:0]	0	R/W	Background Color G Signal G: Unsigned 8 bits (0 to 255 [LSB])
15 to 8	GR2_BASE_B [7:0]	0	R/W	Background Color B Signal B: Unsigned 8 bits (0 to 255 [LSB])
7 to 0	GR2_BASE_R [7:0]	0	R/W	Background Color R Signal R: Unsigned 8 bits (0 to 255 [LSB])

Note: This register is updated when GR2_P_VEN in GR2_UPDATE is 1.

chanhvinh.com

35.2.21 CLUT Table Control Register (Graphics 2) (GR2_CLUT)

Bit:	31	30	29	28	27	26	25	24	23	22	21	20	19	18	17	16
	—	—	—	—	—	—	—	—	—	—	—	—	—	—	—	GR2_CLT_SEL
Initial value:	0	0	0	0	0	0	0	0	0	0	0	0	0	0	0	0
R/W:	R	R	R	R	R	R	R	R	R	R	R	R	R	R	R	R/W

Bit:	15	14	13	12	11	10	9	8	7	6	5	4	3	2	1	0
	—	—	—	—	—	—	—	—	—	—	—	—	—	—	—	—
Initial value:	0	0	0	0	0	0	0	0	0	0	0	0	0	0	0	0
R/W:	R	R	R	R	R	R	R	R	R	R	R	R	R	R	R	R

Bit	Bit Name	Initial Value	R/W	Description
31 to 17	—	All 0	R	Reserved These bits are always read as 0. The write value should always be 0.
16	GR2_CLT_SEL	0	R/W	CLUT Table Select Signal 0: Selects CLUT table 0. The format is converted to αRGB8888 based on the CLUT table 0. CLUT table 1 can be read from or written to by the CPU. 1: Selects CLUT table 1. The format is converted to αRGB8888 based on the CLUT table 1. CLUT table 0 can be read from or written to by the CPU.
15 to 0	—	All 0	R	Reserved These bits are always read as 0. The write value should always be 0.

Note: This register is updated when GR2_P_VEN in GR2_UPDATE is 1.

chanhvinh.com

35.2.22 Status Monitor Register (Graphics 2) (GR2_MON)

Bit:	31	30	29	28	27	26	25	24	23	22	21	20	19	18	17	16
	—	—	—	—	—	—	—	—	—	—	—	—	—	—	—	—
Initial value:	0	0	0	0	0	0	0	0	0	0	0	0	0	0	0	0
R/W:	R	R	R	R	R	R	R	R	R	R	R	R	R	R	R	R

Bit:	15	14	13	12	11	10	9	8	7	6	5	4	3	2	1	0
	—	—	—	—	—	—	—	—	—	—	—	—	—	—	—	GR2_ARC_ST
Initial value:	0	0	0	0	0	0	0	0	0	0	0	0	0	0	0	0
R/W:	R	R	R	R	R	R	R	R	R	R	R	R	R	R	R	R

Bit	Bit Name	Initial Value	R/W	Description
31 to 1	—	All 0	R	Reserved These bits are always read as 0. The write value should always be 0.
0	GR2_ARC_ST	0	R	Status Flag for Alpha Blending in Rectangular Area 0: Addition or subtraction has been completed. (α value is 0 or 255) 1: Addition or subtraction is in progress.

chanhvinh.com

35.2.23 Graphics 3 Register Update Control Register (GR3_UPDATE)

Bit:	31	30	29	28	27	26	25	24	23	22	21	20	19	18	17	16
	—	—	—	—	—	—	—	—	—	—	—	—	—	—	—	—
Initial value:	0	0	0	0	0	0	0	0	0	0	0	0	0	0	0	0
R/W:	R	R	R	R	R	R	R	R	R	R	R	R	R	R	R	R

Bit:	15	14	13	12	11	10	9	8	7	6	5	4	3	2	1	0
	—	—	—	—	—	—	—	—	—	—	—	GR3_P_VEN	—	—	—	GR3_IBUS_VEN
Initial value:	0	0	0	0	0	0	0	0	0	0	0	0	0	0	0	0
R/W:	R	R	R	R	R	R	R	R	R	R	R	R/WC1	R	R	R	R/WC1

Bit	Bit Name	Initial Value	R/W	Description
31 to 5	—	All 0	R	Reserved These bits are always read as 0. The write value should always be 0.
4	GR3_P_VEN	0	R/WC1	Graphics Display Register Update 0: Registers are not updated. 1: Registers are updated at the rising edge of the Vsync.
3 to 1	—	All 0	R	Reserved These bits are always read as 0. The write value should always be 0.
0	GR3_IBUS_VEN	0	R/WC1	Frame Buffer Read Control Register Update 0: Registers are not updated. 1: Registers are updated at the rising edge of the Vsync.

chanhvinh.com

35.2.24 Frame Buffer Read Control Register (Graphics 3) (GR3_FLM_RD)

Bit:	31	30	29	28	27	26	25	24	23	22	21	20	19	18	17	16
	—	—	—	—	—	—	—	—	—	—	—	—	—	—	—	—
Initial value:	0	0	0	0	0	0	0	0	0	0	0	0	0	0	0	0
R/W:	R	R	R	R	R	R	R	R	R	R	R	R	R	R	R	R

Bit:	15	14	13	12	11	10	9	8	7	6	5	4	3	2	1	0
	—	—	—	—	—	—	—	—	—	—	—	—	—	—	—	GR3_R_ENB
Initial value:	0	0	0	0	0	0	0	0	0	0	0	0	0	0	0	0
R/W:	R	R	R	R	R	R	R	R	R	R	R	R	R	R	R	R/W

Bit	Bit Name	Initial Value	R/W	Description
31 to 1	—	All 0	R	Reserved These bits are always read as 0. The write value should always be 0.
0	GR3_R_ENB	0	R/W	Frame Buffer Read Enable 0: Frame buffer reading is disabled. 1: Frame buffer reading is enabled.

Note: This register is updated when GR3_IBUS_VEN in GR3_UPDATE is 1.

chanhvinh.com

35.2.25 Frame Buffer Control Register 1 (Graphics 3) (GR3_FLM1)

Bit:	31	30	29	28	27	26	25	24	23	22	21	20	19	18	17	16
	—	—	—	—	—	—	—	—	—	—	—	—	—	—	—	GR3_LN_OFF_DIR
Initial value:	0	0	0	0	0	0	0	0	0	0	0	0	0	0	0	0
R/W:	R	R	R	R	R	R	R	R	R	R	R	R	R	R	R	R/W

Bit:	15	14	13	12	11	10	9	8	7	6	5	4	3	2	1	0
	—	—	—	—	—	—	GR3_FLM_SEL[1:0]		—	—	—	—	—	—	—	GR3_BST_MD
Initial value:	0	0	0	0	0	0	0	0	0	0	0	0	0	0	0	0
R/W:	R	R	R	R	R	R	R/W	R/W	R	R	R	R	R	R	R	R/W

Bit	Bit Name	Initial Value	R/W	Description
31 to 17	—	All 0	R	Reserved These bits are always read as 0. The write value should always be 0.
16	GR3_LN_OFF_DIR	0	R/W	Selects the line offset address direction of the frame buffer. 0: Increments the address by the line offset address. 1: Decrements the address by the line offset address.
15 to 10	—	All 0	R	Reserved These bits are always read as 0. The write value should always be 0.
9, 8	GR3_FLM_SEL[1:0]	0	R/W	Selects a frame buffer address setting signal. 0: Selects frame 0. 1: Selects register GR3_FLM_NUM. 2: Selects frame 0. 3: Setting prohibited
7 to 1	—	All 0	R	Reserved These bits are always read as 0. The write value should always be 0.
0	GR3_BST_MD	0	R/W	Frame Buffer Burst Transfer Mode 0: 32-byte transfer 1: 128- byte transfer

Note: GR3_LN_OFF_DIR and GR3_FLM_SEL are updated when GR3_IBUS_VEN in GR3_UPDATE is 1.
GR3_BST_MD is updated when GR3_IBUS_VEN and GR3_P_VEN in GR3_UPDATE are 1.

chanhvinh.com

35.2.26 Frame Buffer Control Register 2 (Graphics 3) (GR3_FLM2)

Bit:	31	30	29	28	27	26	25	24	23	22	21	20	19	18	17	16
	GR3_BASE[31:16]															
Initial value:	0	0	0	0	0	0	0	0	0	0	0	0	0	0	0	0
R/W:	R/W	R/W	R/W	R/W	R/W	R/W	R/W	R/W	R/W	R/W	R/W	R/W	R/W	R/W	R/W	R/W

Bit:	15	14	13	12	11	10	9	8	7	6	5	4	3	2	1	0
	GR3_BASE[15:0]															
Initial value:	0	0	0	0	0	0	0	0	0	0	0	0	0	0	0	0
R/W:	R/W	R/W	R/W	R/W	R/W	R/W	R/W	R/W	R/W	R/W	R/W	R/W	R/W	R/W	R/W	R/W

Bit	Bit Name	Initial Value	R/W	Description
31 to 0	GR3_BASE [31:0]	0	R/W	Frame Buffer Base Address (upper) Sets the start address of the frame buffer where frame data is to be stored. GR_BASE[4:3] and GR_BASE[6:3] are referred to during 32-byte burst transfer and 128-byte burst transfer, respectively, to skip the start line data. The lower 3 bits should be fixed to 000.

Note: This register is updated when GR3_IBUS_VEN and GR3_P_VEN in GR3_UPDATE are 1.

chanhvinh.com

35.2.27 Frame Buffer Control Register 3 (Graphics 3) (GR3_FLM3)

Bit:	31	30	29	28	27	26	25	24	23	22	21	20	19	18	17	16
	—	GR3_LN_OFF[14:0]														
Initial value:	0	0	0	0	0	0	0	0	0	0	0	0	0	0	0	0
R/W:	R	R/W	R/W	R/W	R/W	R/W	R/W	R/W	R/W	R/W	R/W	R/W	R/W	R/W	R/W	R/W

Bit:	15	14	13	12	11	10	9	8	7	6	5	4	3	2	1	0
	—	—	—	—	—	—	GR3_FLM_NUM[9:0]									
Initial value:	0	0	0	0	0	0	0	0	0	0	0	0	0	0	0	0
R/W:	R	R	R	R	R	R	R/W	R/W	R/W	R/W	R/W	R/W	R/W	R/W	R/W	R/W

Bit	Bit Name	Initial Value	R/W	Description
31	—	0	R	Reserved This bit is always read as 0. The write value should always be 0.
30 to 16	GR3_LN_OFF[14:0]	0	R/W	Frame Buffer Line Offset Address Sets the line offset address for calculating the start address of each line. Line 0:GR3_BASE Line 1:GR3_BASE + GR3_LN_OFF × 1 : Line n: GR3_BASE + GR3_LN_OFF × n For 32 byte transfer, the lower 5 bits should be fixed to 0_0000. For 128 byte transfer, the lower 7 bits should be fixed to 000_0000.
15 to 10	—	All 0	R	Reserved These bits are always read as 0. The write value should always be 0.
9 to 0	GR3_FLM_NUM[9:0]	0	R/W	Frame Number of Frame Buffer Manually set the frame number when GR3_FLM_SEL = 1.

Note: This register is updated when GR3_IBUS_VEN in GR3_UPDATE is 1.

chanhvinh.com

35.2.28 Frame Buffer Control Register 4 (Graphics 3) (GR3_FLM4)

Bit:	31	30	29	28	27	26	25	24	23	22	21	20	19	18	17	16
	—	—	—	—	—	—	—	—	—	GR3_FLM_OFF[22:16]						
Initial value:	0	0	0	0	0	0	0	0	0	0	0	0	0	0	0	0
R/W:	R	R	R	R	R	R	R	R	R	R/W	R/W	R/W	R/W	R/W	R/W	R/W

Bit:	15	14	13	12	11	10	9	8	7	6	5	4	3	2	1	0
	GR3_FLM_OFF[15:0]															
Initial value:	0	0	0	0	0	0	0	0	0	0	0	0	0	0	0	0
R/W:	R/W	R/W	R/W	R/W	R/W	R/W	R/W	R/W	R/W	R/W	R/W	R/W	R/W	R/W	R/W	R/W

Bit	Bit Name	Initial Value	R/W	Description
31 to 23	—	All 0	R	Reserved These bits are always read as 0. The write value should always be 0.
22 to 0	GR3_FLM_OFF[22:0]	0	R/W	Frame Buffer Frame Offset Address (upper) Specifies the frame offset address used for calculating the start address of each frame buffer when more than one buffer is used. Buffer 0: GR3_BASE Buffer 1: GR3_BASE + GR3_FLM_OFF × 1 : Buffer n: GR3_BASE + GR3_FLM_OFF × n For 32 byte transfer, the lower 5 bits should be fixed to 0_0000. For 128 byte transfer, the lower 7 bits should be fixed to 000_0000.

Note: This register is updated when GR3_IBUS_VEN in GR3_UPDATE is 1.

chanhvinh.com

35.2.29 Frame Buffer Control Register 5 (Graphics 3) (GR3_FLM5)

Bit:	31	30	29	28	27	26	25	24	23	22	21	20	19	18	17	16
	—	—	—	—	—	—	GR3_FLM_LNUM[9:0]									
Initial value:	0	0	0	0	0	0	0	0	0	0	0	0	0	0	0	0
R/W:	R	R	R	R	R	R	R/W	R/W	R/W	R/W	R/W	R/W	R/W	R/W	R/W	R/W

Bit:	15	14	13	12	11	10	9	8	7	6	5	4	3	2	1	0
	—	—	—	—	—	—	GR3_FLM_LOOP[9:0]									
Initial value:	0	0	0	0	0	0	1	1	1	1	1	1	1	1	1	1
R/W:	R	R	R	R	R	R	R/W	R/W	R/W	R/W	R/W	R/W	R/W	R/W	R/W	R/W

Bit	Bit Name	Initial Value	R/W	Description
31 to 26	—	All 0	R	Reserved These bits are always read as 0. The write value should always be 0.
25 to 16	GR3_FLM_LNUM[9:0]	0	R/W	Sets number of lines in a frame The number of lines is (GR3_FLM_LNUM + 1).
15 to 10	—	All 0	R	Reserved These bits are always read as 0. The write value should always be 0.
9 to 0	GR3_FLM_LOOP[9:0]	1023	R/W	Number of lines when reading the addresses repeatedly by returning to the start address after reaching the end address. The number of lines is (GR3_FLM_LOOP + 1).

Note: This register is updated when GR3_IBUS_VEN in GR3_UPDATE is 1.

35.2.30 Frame Buffer Control Register 6 (Graphics 3) (GR3_FLM6)

Bit:	31	30	29	28	27	26	25	24	23	22	21	20	19	18	17	16
	GR3_FORMAT[3:0]				—	—	GR3_HW[9:0]									
Initial value:	0	0	0	0	0	0	0	0	0	0	0	0	0	0	0	0
R/W:	R/W	R/W	R/W	R/W	R	R	R/W	R/W	R/W	R/W	R/W	R/W	R/W	R/W	R/W	R/W

Bit:	15	14	13	12	11	10	9	8	7	6	5	4	3	2	1	0
	—	—	—	GR3_ENDIAN_ON	—	—	—	—	—	—	GR3_STA_POS[5:0]					
Initial value:	0	0	0	0	0	0	0	0	0	0	0	0	0	0	0	0
R/W:	R	R	R	R/W	R	R	R	R	R	R	R/W	R/W	R/W	R/W	R/W	R/W

chanhvinh.com

Bit	Bit Name	Initial Value	R/W	Description
31 to 28	GR3_FORMAT [3:0]	0	R/W	Sets the format of the frame buffer read signal. 0: RGB565 1: RGB888 2: αRGB1555 3: αRGB4444 4: αRGB8888 5: CLUT8 6: CLUT4 7: CLUT1 8 to 15: Setting prohibited
27, 26	—	All 0	R	Reserved These bits are always read as 0. The write value should always be 0.
25 to 16	GR3_HW [9:0]	0	R/W	Sets the width of the horizontal valid period. The width is (GR3_HW + 1) pixels. Note: Set to 2 or greater.
15 to 13	—	All 0	R	Reserved These bits are always read as 0. The write value should always be 0.
12	GR3_ENDIAN_ON	0	R/W	Turns on/off the endian control of data read from buffer. 0: Off 1: On
11 to 6	—	All 0	R	Reserved These bits are always read as 0. The write value should always be 0.
5 to 0	GR3_STA_POS[5:0]	0	R/W	Sets the amount of data to be skipped through. Specifically data amount equal to the amount indicated by GR3_STA_POS is skipped from the start of the line.

Note: GR3_ENDIAN_ON and GR3_STA_POS are updated when GR3_P_VEN in GR3_UPDATE is 1.
GR3_FORMAT and GR3_HW are updated when GR3_IBUS_VEN and GR3_P_VEN in GR3_UPDATE are 1.

chanhvinh.com

35.2.31 Alpha Blending Control Register 1 (Graphics 3) (GR3_AB1)

Bit:	31	30	29	28	27	26	25	24	23	22	21	20	19	18	17	16
	—	—	—	—	—	—	—	—	—	—	—	—	—	—	—	—
Initial value:	0	0	0	0	0	0	0	0	0	0	0	0	0	0	0	0
R/W:	R	R	R	R	R	R	R	R	R	R	R	R	R	R	R	R

Bit:	15	14	13	12	11	10	9	8	7	6	5	4	3	2	1	0
	—	—	—	GR3_ARC_ON	—	—	—	GR3_ARC_DISP_ON	—	—	—	GR3_GRC_DISP_ON	—	—	GR3_DISP_SEL[1:0]	
Initial value:	0	0	0	0	0	0	0	0	0	0	0	0	0	0	0	0
R/W:	R	R	R	R/W	R	R	R	R/W	R	R	R	R/W	R	R	R/W	R/W

Bit	Bit Name	Initial Value	R/W	Description
31 to 13	—	All 0	R	Reserved These bits are always read as 0. The write value should always be 0.
12	GR3_ARC_ON	0	R/W	Turns on/off alpha blending in a rectangular area. 0: Off 1: On
11 to 9	—	All 0	R	Reserved These bits are always read as 0. The write value should always be 0.
8	GR3_ARC_DISP_ON	0	R/W	Turns on/off frame-line display of the image area for alpha blending in a rectangular area. 0: Frame-line display off 1: Frame-line display on
7 to 5	—	All 0	R	Reserved These bits are always read as 0. The write value should always be 0.
4	GR3_GRC_DISP_ON	0	R/W	Turns on/off frame-line display of the graphics image area. 0: Frame-line display off 1: Frame-line display on
3, 2	—	All 0	R	Reserved These bits are always read as 0. The write value should always be 0.

chanhvinh.com

Bit	Bit Name	Initial Value	R/W	Description
1, 0	GR3_DISP_SEL[1:0]	0	R/W	Selects the graphics display mode. 0: Background color display 1: Lower-layer graphics display 2: Current graphics display 3: Blended display of lower-layer graphics and current graphics

Note: This register is updated when GR3_P_VEN in GR3_UPDATE is 1.

chanhvinh.com

35.2.32 Alpha Blending Control Register 2 (Graphics 3) (GR3_AB2)

Bit:	31	30	29	28	27	26	25	24	23	22	21	20	19	18	17	16
	—	—	—	—	—	GR3_GRC_VS[10:0]										
Initial value:	0	0	0	0	0	0	0	0	0	0	0	0	0	0	0	0
R/W:	R	R	R	R	R	R/W	R/W	R/W	R/W	R/W	R/W	R/W	R/W	R/W	R/W	R/W

Bit:	15	14	13	12	11	10	9	8	7	6	5	4	3	2	1	0
	—	—	—	—	—	GR3_GRC_VW[10:0]										
Initial value:	0	0	0	0	0	0	0	0	0	0	0	0	0	0	0	0
R/W:	R	R	R	R	R	R/W	R/W	R/W	R/W	R/W	R/W	R/W	R/W	R/W	R/W	R/W

Bit	Bit Name	Initial Value	R/W	Description
31 to 27	—	All 0	R	Reserved These bits are always read as 0. The write value should always be 0.
26 to 16	GR3_GRC_VS[10:0]	0	R/W	Sets the vertical start position of the graphics image area. Note: Set to 4 or greater lines and the result of GR3_GRC_VS + GR3_GRC_VW should be smaller than or equal to 2039 lines.
15 to 11	—	All 0	R	Reserved These bits are always read as 0. The write value should always be 0.
10 to 0	GR3_GRC_VW[10:0]	0	R/W	Sets the vertical width of the graphics image area.

Note: This register is updated when GR3_P_VEN in GR3_UPDATE is 1.

chanhvinh.com

35.2.33 Alpha Blending Control Register 3 (Graphics 3) (GR3_AB3)

Bit:	31	30	29	28	27	26	25	24	23	22	21	20	19	18	17	16
	—	—	—	—	—	GR3_GRC_HS[10:0]										
Initial value:	0	0	0	0	0	0	0	0	0	0	0	0	0	0	0	0
R/W:	R	R	R	R	R	R/W	R/W	R/W	R/W	R/W	R/W	R/W	R/W	R/W	R/W	R/W

Bit:	15	14	13	12	11	10	9	8	7	6	5	4	3	2	1	0
	—	—	—	—	—	GR3_GRC_HW[10:0]										
Initial value:	0	0	0	0	0	0	0	0	0	0	0	0	0	0	0	0
R/W:	R	R	R	R	R	R/W	R/W	R/W	R/W	R/W	R/W	R/W	R/W	R/W	R/W	R/W

Bit	Bit Name	Initial Value	R/W	Description
31 to 27	—	All 0	R	Reserved These bits are always read as 0. The write value should always be 0.
26 to 16	GR3_GRC_HS[10:0]	0	R/W	Sets the horizontal start position of the graphics image area. Note: Set to 16 or greater clocks and the result of GR3_GRC_HS + GR3_GRC_HW should be smaller than or equal to 2015 clocks.
15 to 11	—	All 0	R	Reserved These bits are always read as 0. The write value should always be 0.
10 to 0	GR3_GRC_HW[10:0]	0	R/W	Sets the horizontal width of the graphics image area. Note: For displaying an image with 1- or 2-pixel horizontal width, set GR3_HW to 2 and GR3_GRC_HW to 1 (1-pixel) or 2 (2-pixel).

Note: All the bits assigned to this address are updated when GR3_P_VEN in GR3_UPDATE is 1.

chanhvinh.com

35.2.34 Alpha Blending Control Register 4 (Graphics 3) (GR3_AB4)

Bit:	31	30	29	28	27	26	25	24	23	22	21	20	19	18	17	16
	—	—	—	—	—	GR3_ARC_VS[10:0]										
Initial value:	0	0	0	0	0	0	0	0	0	0	0	0	0	0	0	0
R/W:	R	R	R	R	R	R/W	R/W	R/W	R/W	R/W	R/W	R/W	R/W	R/W	R/W	R/W

Bit:	15	14	13	12	11	10	9	8	7	6	5	4	3	2	1	0
	—	—	—	—	—	GR3_ARC_VW[10:0]										
Initial value:	0	0	0	0	0	0	0	0	0	0	0	0	0	0	0	0
R/W:	R	R	R	R	R	R/W	R/W	R/W	R/W	R/W	R/W	R/W	R/W	R/W	R/W	R/W

Bit	Bit Name	Initial Value	R/W	Description
31 to 27	—	All 0	R	Reserved These bits are always read as 0. The write value should always be 0.
26 to 16	GR3_ARC_VS[10:0]	0	R/W	Sets the vertical start position of the valid image area for alpha blending in a rectangular area.
15 to 11	—	All 0	R	Reserved These bits are always read as 0. The write value should always be 0.
10 to 0	GR3_ARC_VW[10:0]	0	R/W	Sets the vertical width of the valid image area for alpha blending in a rectangular area.

Note: This register is updated when GR3_P_VEN in GR3_UPDATE is 1.

chanhvinh.com

35.2.35 Alpha Blending Control Register 5 (Graphics 3) (GR3_AB5)

Bit:	31	30	29	28	27	26	25	24	23	22	21	20	19	18	17	16
	—	—	—	—	—	GR3_ARC_HS[10:0]										
Initial value:	0	0	0	0	0	0	0	0	0	0	0	0	0	0	0	0
R/W:	R	R	R	R	R	R/W	R/W	R/W	R/W	R/W	R/W	R/W	R/W	R/W	R/W	R/W

Bit:	15	14	13	12	11	10	9	8	7	6	5	4	3	2	1	0
	—	—	—	—	—	GR3_ARC_HW[10:0]										
Initial value:	0	0	0	0	0	0	0	0	0	0	0	0	0	0	0	0
R/W:	R	R	R	R	R	R/W	R/W	R/W	R/W	R/W	R/W	R/W	R/W	R/W	R/W	R/W

Bit	Bit Name	Initial Value	R/W	Description
31 to 27	—	All 0	R	Reserved These bits are always read as 0. The write value should always be 0.
26 to 16	GR3_ARC_HS[10:0]	0	R/W	Sets the horizontal start position of the valid image area for alpha blending in a rectangular area.
15 to 11	—	All 0	R	Reserved These bits are always read as 0. The write value should always be 0.
10 to 0	GR3_ARC_HW[10:0]	0	R/W	Sets the horizontal width of the valid image area for alpha blending in a rectangular area.

Note: This register is updated when GR3_P_VEN in GR3_UPDATE is 1.

chanhvinh.com

35.2.36 Alpha Blending Control Register 6 (Graphics 3) (GR3_AB6)

Bit:	31	30	29	28	27	26	25	24	23	22	21	20	19	18	17	16
	—	—	—	—	—	—	—	GR3_ARC_MODE	GR3_ARC_COEF[7:0]							
Initial value:	0	0	0	0	0	0	0	0	0	0	0	0	0	0	0	0
R/W:	R	R	R	R	R	R	R	R/W	R/W	R/W	R/W	R/W	R/W	R/W	R/W	R/W

Bit:	15	14	13	12	11	10	9	8	7	6	5	4	3	2	1	0
	—	—	—	—	—	—	—	—	GR3_ARC_RATE[7:0]							
Initial value:	0	0	0	0	0	0	0	0	0	0	0	0	0	0	0	0
R/W:	R	R	R	R	R	R	R	R	R/W	R/W	R/W	R/W	R/W	R/W	R/W	R/W

Bit	Bit Name	Initial Value	R/W	Description
31 to 25	—	All 0	R	Reserved These bits are always read as 0. The write value should always be 0.
24	GR3_ARC_MODE	0	R/W	Alpha Blending Mode in Rectangular Area 0: Addition 1: Subtraction
23 to 16	GR3_ARC_COEF[7:0]	0	R/W	Sets the alpha coefficient for alpha blending in a rectangular area. (0 to 255) [7:0]: Variation (absolute value)
15 to 8	—	All 0	R	Reserved These bits are always read as 0. The write value should always be 0.
7 to 0	GR3_ARC_RATE[7:0]	0	R/W	Sets the frame rate for alpha blending in a rectangular area.

Note: This register is updated when GR3_P_VEN in GR3_UPDATE is 1.

chanhvinh.com

35.2.37 Alpha Blending Control Register 7 (Graphics 3) (GR3_AB7)

Bit:	31	30	29	28	27	26	25	24	23	22	21	20	19	18	17	16
	—	—	—	—	—	—	—	—	GR3_ARC_DEF[7:0]							
Initial value:	0	0	0	0	0	0	0	0	1	1	1	1	1	1	1	1
R/W:	R	R	R	R	R	R	R	R	R/W	R/W	R/W	R/W	R/W	R/W	R/W	R/W

Bit:	15	14	13	12	11	10	9	8	7	6	5	4	3	2	1	0
	—	—	—	—	—	—	—	—	—	—	—	—	—	—	—	GR3_CK_ON
Initial value:	0	0	0	0	0	0	0	0	0	0	0	0	0	0	0	0
R/W:	R	R	R	R	R	R	R	R	R	R	R	R	R	R	R	R/W

Bit	Bit Name	Initial Value	R/W	Description
31 to 24	—	All 0	R	Reserved These bits are always read as 0. The write value should always be 0.
23 to 16	GR3_ARC_DEF[7:0]	255	R/W	Sets the initial alpha value for alpha blending in a rectangular area. Note: The initial α value cannot be changed during addition or subtraction (GR3_ARC_ST = 1). To change the value during the above condition, the alpha blending in a rectangular area should be off (GR3_ARC_ON = 0).
15 to 1	—	All 0	R	Reserved These bits are always read as 0. The write value should always be 0.
0	GR3_CK_ON	0	R/W	Turns on/off CLUT-index/RGB-index chroma-key processing. 0: Off 1: On

Note: This register is updated when GR3_P_VEN in GR3_UPDATE is 1.

chanhvinh.com

35.2.38 Alpha Blending Control Register 8 (Graphics 3) (GR3_AB8)

Bit:	31	30	29	28	27	26	25	24	23	22	21	20	19	18	17	16
	GR3_CK_KCLUT[7:0]								GR3_CK_KG[7:0]							
Initial value:	0	0	0	0	0	0	0	0	0	0	0	0	0	0	0	0
R/W:	R/W	R/W	R/W	R/W	R/W	R/W	R/W	R/W	R/W	R/W	R/W	R/W	R/W	R/W	R/W	R/W

Bit:	15	14	13	12	11	10	9	8	7	6	5	4	3	2	1	0
	GR3_CK_KB[7:0]								GR3_CK_KR[7:0]							
Initial value:	0	0	0	0	0	0	0	0	0	0	0	0	0	0	0	0
R/W:	R/W	R/W	R/W	R/W	R/W	R/W	R/W	R/W	R/W	R/W	R/W	R/W	R/W	R/W	R/W	R/W

Bit	Bit Name	Initial Value	R/W	Description
31 to 24	GR3_CK_KCLUT[7:0]	0	R/W	CLUT Signal for CLUT-Index Chroma-Key Processing CLUT: Unsigned 8 bits (0 to 255 [LSB])
23 to 16	GR3_CK_KG[7:0]	0	R/W	G Signal for RGB-Index Chroma-Key Processing G: Unsigned 8 bits (0 to 255 [LSB])
15 to 8	GR3_CK_KB[7:0]	0	R/W	B Signal for RGB-Index Chroma-Key Processing B: Unsigned 8 bits (0 to 255 [LSB])
7 to 0	GR3_CK_KR[7:0]	0	R/W	R Signal for RGB-Index Chroma-Key Processing R: Unsigned 8 bits (0 to 255 [LSB])

Note: This register is updated when GR3_P_VEN in GR3_UPDATE is 1.

chanhvinh.com

35.2.39 Alpha Blending Control Register 9 (Graphics 3) (GR3_AB9)

Bit:	31	30	29	28	27	26	25	24	23	22	21	20	19	18	17	16
	GR3_CK_A[7:0]								GR3_CK_G[7:0]							
Initial value:	0	0	0	0	0	0	0	0	0	0	0	0	0	0	0	0
R/W:	R/W	R/W	R/W	R/W	R/W	R/W	R/W	R/W	R/W	R/W	R/W	R/W	R/W	R/W	R/W	R/W

Bit:	15	14	13	12	11	10	9	8	7	6	5	4	3	2	1	0
	GR3_CK_B[7:0]								GR3_CK_R[7:0]							
Initial value:	0	0	0	0	0	0	0	0	0	0	0	0	0	0	0	0
R/W:	R/W	R/W	R/W	R/W	R/W	R/W	R/W	R/W	R/W	R/W	R/W	R/W	R/W	R/W	R/W	R/W

Bit	Bit Name	Initial Value	R/W	Description
31 to 24	GR3_CK_A [7:0]	0	R/W	Replaced Alpha Signal after RGB/CLUT-Index Chroma-Key Processing α: Unsigned 8 bits (0 to 255 [LSB])
23 to 16	GR3_CK_G [7:0]	0	R/W	Replaced G Signal after RGB/CLUT-Index Chroma-Key Processing G: Unsigned 8 bits (0 to 255 [LSB])
15 to 8	GR3_CK_B [7:0]	0	R/W	Replaced B Signal after RGB/CLUT-Index Chroma-Key Processing B: Unsigned 8 bits (0 to 255 [LSB])
7 to 0	GR3_CK_R [7:0]	0	R/W	Replaced R Signal after RGB/CLUT-Index Chroma-Key Processing R: Unsigned 8 bits (0 to 255 [LSB])

Note: This register is updated when GR3_P_VEN in GR3_UPDATE is 1.

chanhvinh.com

35.2.40 Alpha Blending Control Register 10 (Graphics 3) (GR3_AB10)

Bit:	31	30	29	28	27	26	25	24	23	22	21	20	19	18	17	16
	GR3_A0[7:0]								GR3_G0[7:0]							
Initial value:	0	0	0	0	0	0	0	0	0	0	0	0	0	0	0	0
R/W:	R/W	R/W	R/W	R/W	R/W	R/W	R/W	R/W	R/W	R/W	R/W	R/W	R/W	R/W	R/W	R/W

Bit:	15	14	13	12	11	10	9	8	7	6	5	4	3	2	1	0
	GR3_B0[7:0]								GR3_R0[7:0]							
Initial value:	0	0	0	0	0	0	0	0	0	0	0	0	0	0	0	0
R/W:	R/W	R/W	R/W	R/W	R/W	R/W	R/W	R/W	R/W	R/W	R/W	R/W	R/W	R/W	R/W	R/W

Bit	Bit Name	Initial Value	R/W	Description
31 to 24	GR3_A0 [7:0]	0	R/W	CLUT1 α0 Signal Replaced with α signal when in the CLUT1 format and CLUT1= 0. Replaced with α signal when in the αRGB1555 format and α = 0.
23 to 16	GR3_G0 [7:0]	0	R/W	CLUT1 G0 Signal Replaced with G signal when in the CLUT1 format and CLUT1 = 0.
15 to 8	GR3_B0 [7:0]	0	R/W	CLUT1 B0 Signal Replaced with B signal when in the CLUT1 format and CLUT1 = 0.
7 to 0	GR3_R0 [7:0]	0	R/W	CLUT1 R0 Signal Replaced with R signal when in the CLUT1 format and CLUT1 = 0.

Note: This register is updated when GR3_P_VEN in GR3_UPDATE is 1.

chanhvinh.com

35.2.41 Alpha Blending Control Register 11 (Graphics 3) (GR3_AB11)

Bit:	31	30	29	28	27	26	25	24	23	22	21	20	19	18	17	16
	GR3_A1[7:0]								GR3_G1[7:0]							
Initial value:	0	0	0	0	0	0	0	0	0	0	0	0	0	0	0	0
R/W:	R/W	R/W	R/W	R/W	R/W	R/W	R/W	R/W	R/W	R/W	R/W	R/W	R/W	R/W	R/W	R/W

Bit:	15	14	13	12	11	10	9	8	7	6	5	4	3	2	1	0
	GR3_B1[7:0]								GR3_R1[7:0]							
Initial value:	0	0	0	0	0	0	0	0	0	0	0	0	0	0	0	0
R/W:	R/W	R/W	R/W	R/W	R/W	R/W	R/W	R/W	R/W	R/W	R/W	R/W	R/W	R/W	R/W	R/W

Bit	Bit Name	Initial Value	R/W	Description
31 to 24	GR3_A1 [7:0]	0	R/W	CLUT1 α1 Signal Replaced with α signal when in the CLUT1 format and CLUT1 = 1. Replaced with α signal when in the αRGB1555 format and α = 1.
23 to 16	GR3_G1 [7:0]	0	R/W	CLUT1 G1 Signal Replaced with G signal when in the CLUT1 format and CLUT1 = 1.
15 to 8	GR3_B1 [7:0]	0	R/W	CLUT1 B1 Signal Replaced with B signal when in the CLUT1 format and CLUT1 = 1.
7 to 0	GR3_R1 [7:0]	0	R/W	CLUT1 R1 Signal Replaced with R signal when in the CLUT1 format and CLUT1 = 1.

Note: This register is updated when GR3_P_VEN in GR3_UPDATE is 1.

chanhvinh.com

35.2.42 Background Color Control Register (Graphics 3) (GR3_BASE)

Bit:	31	30	29	28	27	26	25	24	23	22	21	20	19	18	17	16
	—	—	—	—	—	—	—	—	GR3_BASE_G[7:0]							
Initial value:	0	0	0	0	0	0	0	0	0	0	0	0	0	0	0	0
R/W:	R	R	R	R	R	R	R	R	R/W	R/W	R/W	R/W	R/W	R/W	R/W	R/W

Bit:	15	14	13	12	11	10	9	8	7	6	5	4	3	2	1	0
	GR3_BASE_B[7:0]								GR3_BASE_R[7:0]							
Initial value:	0	0	0	0	0	0	0	0	0	0	0	0	0	0	0	0
R/W:	R/W	R/W	R/W	R/W	R/W	R/W	R/W	R/W	R/W	R/W	R/W	R/W	R/W	R/W	R/W	R/W

Bit	Bit Name	Initial Value	R/W	Description
31 to 24	—	All 0	R	Reserved These bits are always read as 0. The write value should always be 0.
23 to 16	GR3_BASE_G [7:0]	0	R/W	Background Color G Signal G: Unsigned 8 bits (0 to 255 [LSB])
15 to 8	GR3_BASE_B [7:0]	0	R/W	Background Color B Signal B: Unsigned 8 bits (0 to 255 [LSB])
7 to 0	GR3_BASE_R [7:0]	0	R/W	Background Color R Signal R: Unsigned 8 bits (0 to 255 [LSB])

Note: This register is updated when GR3_P_VEN in GR3_UPDATE is 1.

chanhvinh.com

35.2.43 CLUT Table and Interrupt Control Register (Graphics 3) (GR3_CLUT_INT)

Bit:	31	30	29	28	27	26	25	24	23	22	21	20	19	18	17	16
	—	—	—	—	—	—	—	—	—	—	—	—	—	—	—	GR3_CLT_SEL
Initial value:	0	0	0	0	0	0	0	0	0	0	0	0	0	0	0	0
R/W:	R	R	R	R	R	R	R	R	R	R	R	R	R	R	R	R/W

Bit:	15	14	13	12	11	10	9	8	7	6	5	4	3	2	1	0
	—	—	—	—	—	GR3_LINE[10:0]										
Initial value:	0	0	0	0	0	0	0	0	0	0	0	0	0	0	0	0
R/W:	R	R	R	R	R	R/W	R/W	R/W	R/W	R/W	R/W	R/W	R/W	R/W	R/W	R/W

Bit	Bit Name	Initial Value	R/W	Description
31 to 17	—	All 0	R	Reserved These bits are always read as 0. The write value should always be 0.
16	GR3_CLT_SEL	0	R/W	CLUT Table Select Signal 0: Selects CLUT table 0. The format is converted to αRGB8888 based on the CLUT table 0. CLUT table 1 can be read from or written to by the CPU. 1: Selects CLUT table 1. The format is converted to αRGB8888 based on the CLUT table 1. CLUT table 0 can be read from or written to by the CPU.
15 to 11	—	All 0	R	Reserved These bits are always read as 0. The write value should always be 0.
10 to 0	GR3_LINE[10:0]	0	R/W	Line Interrupt Set When number of lines matches the value of the GR3_LINE bits, an interrupt signal is output. This function is enabled even when the graphics 3 process is not used.

Note: This register is updated when GR3_P_VEN in GR3_UPDATE is 1.

chanhvinh.com

35.2.44 Status Monitor Register (Graphics 3) (GR3_MON)

Bit:	31	30	29	28	27	26	25	24	23	22	21	20	19	18	17	16
	—	—	—	—	—	—	—	—	—	—	—	—	—	—	—	—
Initial value:	0	0	0	0	0	0	0	0	0	0	0	0	0	0	0	0
R/W:	R	R	R	R	R	R	R	R	R	R	R	R	R	R	R	R

Bit:	15	14	13	12	11	10	9	8	7	6	5	4	3	2	1	0
	—	—	—	—	—	—	—	—	—	—	—	—	—	—	—	GR3_ ARC_ST
Initial value:	0	0	0	0	0	0	0	0	0	0	0	0	0	0	0	0
R/W:	R	R	R	R	R	R	R	R	R	R	R	R	R	R	R	R

Bit	Bit Name	Initial Value	R/W	Description
31 to 1	—	All 0	R	Reserved These bits are always read as 0. The write value should always be 0.
0	GR3_ARC_ ST	0	R	Status Flag for Alpha Blending in Rectangular Area 0: Addition or subtraction has been completed. (α value is 0 or 255) 1: Addition or subtraction is in progress.

chanhvinh.com

35.3 Usage Method

35.3.1 Mute Image

The initial values of the GR1_DISP_SEL[1:0], GR2_DISP_SEL[1:0], and GR3_DISP_SEL[1:0] bits are all 0. Accordingly, in the initial setting, a background color is displayed both inside and outside the graphics area for graphics 1, 2, and 3 processes. Since the default background color is black, the black mute image is displayed in the initial state.

35.3.2 Alpha Blending in Rectangular Area

The alpha coefficient and the frame rate can be changed during fade in and fade out by modifying the GR_ARC_MODE, GR_ARC_COEF[7:0] and GR_ARC_RATE[7:0] bits, respectively.

chanhvinh.com

chanhvinh.com
chanhvinh.com
chanhvinh.com
chanhvinh.com

chanhvinh.com

Section 36 Video Display Controller 4 (6): Output Controller

36.1 Output Controller

36.1.1 Overview of Functions

The output controller subjects RGB signals output from the image synthesizer to brightness adjustment, contrast adjustment, gamma correction of individual RGB, dither process, and output format conversion. The output controller also generates various timing signals for LCD panel drive.

Figure 36.1 shows the function block diagram of the output controller.

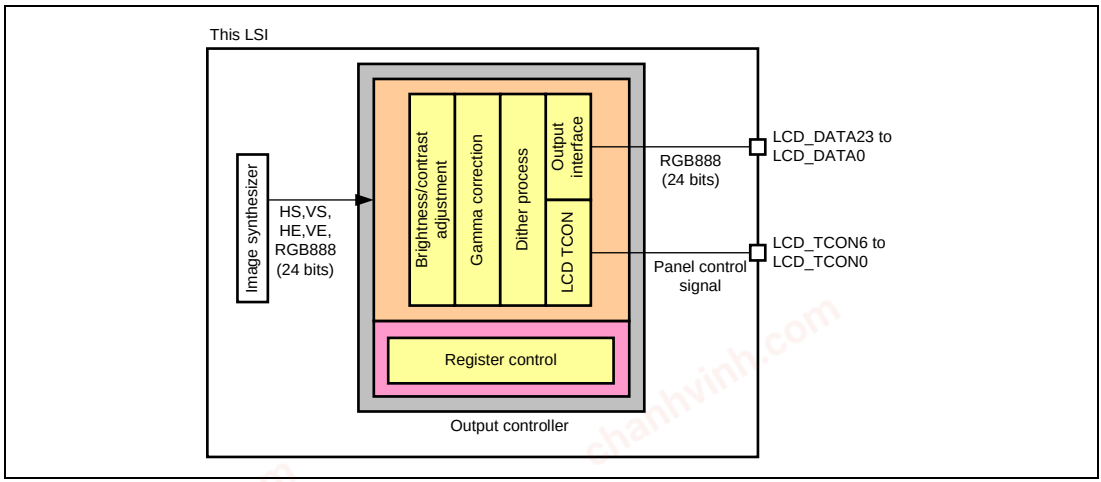

Figure 36.1 Functional Block Diagram of Output Controller

chanhvinh.com

36.1.2 Register Update Control

The Vsync signal is used to control the update timing of all the registers of the output controller.

After 1 is set to the bits in the update control register, the contents of the relevant registers are actually modified at the rising edge of the Vsync signal, when the update control register is automatically cleared to 0.

Table 36.1 Register Update Control

Register Name	Bit Name	Initial Value	Description
OUT_UPDATE	OUTCNT_VEN	0	Brightness/Contrast Control, Dither Process, Output Interface Register Update 0: Registers are not updated. 1: Registers are updated at the rising edge of the Vsync.
GAM_G_UPDATE	GAM_G_VEN	0	Gamma Correction (G) Register Update 0: Registers are not updated. 1: Registers are updated at the rising edge of the Vsync.
GAM_B_UPDATE	GAM_B_VEN	0	Gamma Correction (B) Register Update 0: Registers are not updated. 1: Registers are updated at the rising edge of the Vsync.
GAM_R_UPDATE	GAM_R_VEN	0	Gamma Correction (R) Register Update 0: Registers are not updated. 1: Registers are updated at the rising edge of the Vsync.
TCON_UPDATE	TCON_VEN	0	LCD TCON Register Update 0: Registers are not updated. 1: Registers are updated at the rising edge of the Vsync.

chanhvinh.com

36.1.3 Route Selection

The processing sequence of the brightness/contrast control and gamma correction control can be swapped according to the settings of the register.

Table 36.2 Route Selection

Register Name	Bit Name	Initial Value	Description
OUT_CLK_PHASE	OUTCNT_FRONT_GAM	0	Correction Circuit Sequence Control 0: Brightness → contrast → gamma correction 1: Gamma correction → contrast → brightness

36.1.4 Panel Brightness Adjustment

Brightness (DC) adjustment is individually performed for RGB signals from image synthesizer.

(BRT_R/G/BOUT after brightness adjustment has many bits to prevent overflow or underflow. The overflow or underflow process is performed at contrast calculation.)

(1) Calculation formulas for brightness (DC) adjustment

BRT_GOUT = GIN + PBRT_G – 512

BRT_BOUT = BIN + PBRT_B – 512

BRT_ROUT = RIN + PBRT_R – 512

chanhvinh.com

Table 36.3 Brightness (DC) Adjustment

Register Name	Bit Name	Initial Value	Description
OUT_BRIGHT1	PBRT_G[9:0]	512	Brightness (DC) Adjustment of G Signal Unsigned (0 (-512) to 512 (0) to 1023 (+511) [LSB], 512 [LSB] with offset)
OUT_BRIGHT2	PBRT_B[9:0]	512	Brightness (DC) Adjustment of B Signal Unsigned (0 (-512) to 512 (0) to 1023 (+511) [LSB], 512 [LSB] with offset)
OUT_BRIGHT2	PBRT_R[9:0]	512	Brightness (DC) Adjustment of R Signal Unsigned (0 (-512) to 512 (0) to 1023 (+511) [LSB], 512 [LSB] with offset)

36.1.5 Contrast Adjustment

Contrast is calculated for RGB signals obtained after brightness calculation.

(If an overflow or underflow occurs, contrast is clipped to the maximum or minimum value.)

(1) Calculation formulas for contrast (gain) adjustment

$$GOUT = BRT_GOUT \times CONT_G/128$$

$$BOUT = BRT_BOUT \times CONT_B/128$$

$$ROUT = BRT_ROUT \times CONT_R/128$$

Table 36.4 Contrast (Gain) Adjustment

Register Name	Bit Name	Initial Value	Description
OUT_CONTRAST	CONT_G [7:0]	128	Contrast (Gain) Adjustment of G Signal 0/128 to 255/128 (approx.2 times)
OUT_CONTRAST	CONT_B [7:0]	128	Contrast (Gain) Adjustment of B Signal 0/128 to 255/128 (approx.2 times)
OUT_CONTRAST	CONT_R [7:0]	128	Contrast (Gain) Adjustment of R Signal 0/128 to 255/128 (approx.2 times)

chanhvinh.com

36.1.6 Gamma Correction

Gamma correction is carried out by dividing an input signal having 256 gradation levels into 32 and controlling the gain of each area. Gain coefficient of each area can be set as 0 to approx. 2.0 [times]

(1) Gamma correction formula for each area

$$DOUT = ((DIN - TH_{(n)}) \times GAIN_{(n)} + OFFSET_{(n)})/256$$

DIN: Input signal (8-bit)

DOUT: Output signal (10-bit)

TH(n): Threshold (8-bit)

OFFSET(n): Offset value (19-bit)

GAIN(n): Gain coefficient (11-bit)

(2) Offset calculation formulas for each area

$$OFFSET_{(n)} = OFFSET_{(n-1)} + DEF_O_{(n)} \text{ (When n = 0, } OFFSET_{(0)} = 0.)$$

$$DEF_O_{(n)} = (TH_{(n)} - TH_{(n-1)}) \times GAIN_{(n-1} \text{ (When n = 0, } OFFSET_{(0)} = 0.)$$

OFFSET(n): Offset value of current area (19-bit)

OFFSET(n-1): Offset value of previous area (19-bit)

DEF_O(n): Difference in offset value of Current and previous area (19-bit)

TH(n): Threshold of current area (8-bit)

TH(n-1): Threshold of previous area (8-bit)

GAIN(n-1): Gain coefficient of previous area (11-bit)

chanhvinh.com

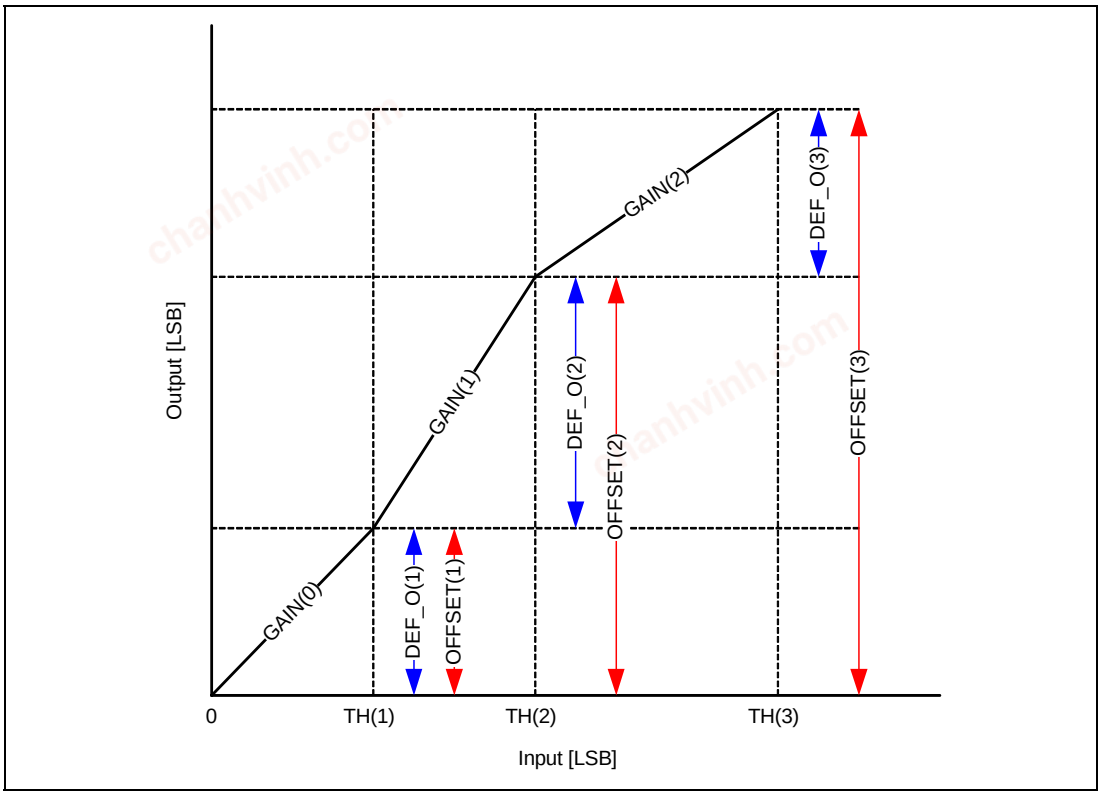

Figure 36.2 Corresponding Chart of Offset Calculation Formulas

chanhvinh.com

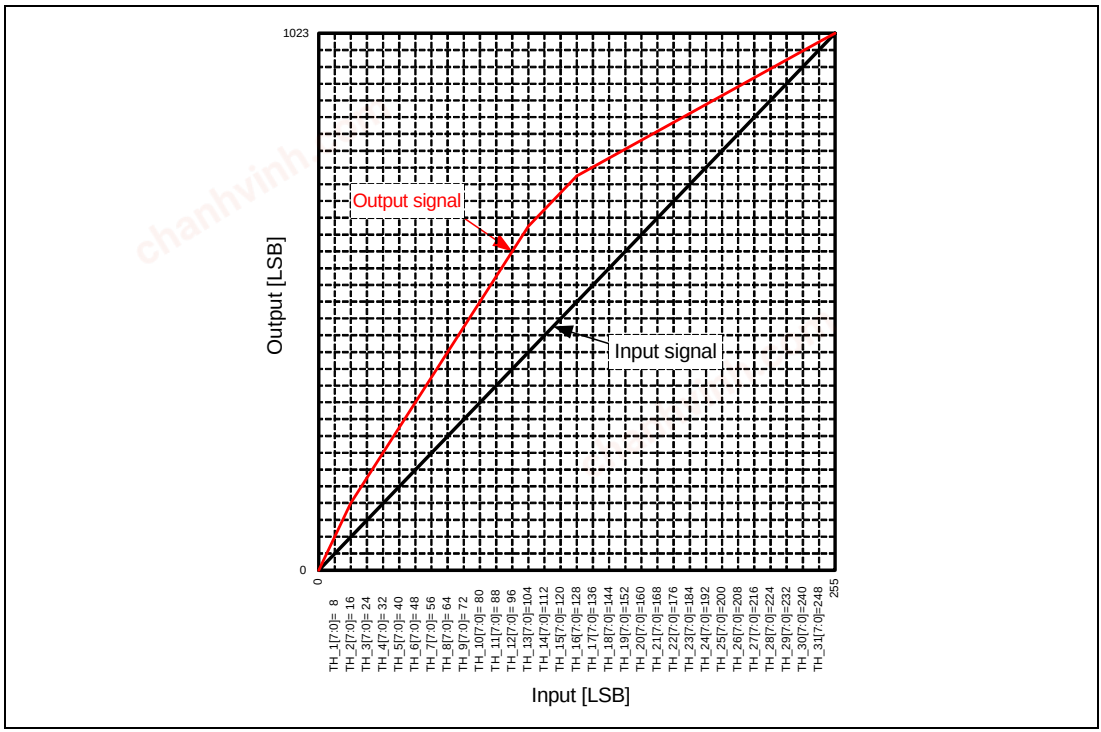

Figure 36.3 Example of Input-Output Characteristics of Gamma Correction

chanhvinh.com

Table 36.5 Gamma Correction

Register Name	Bit Name	Initial Value	Description
GAM_SW	GAM_ON	0	Gamma Correction On/Off Control 0: Off 1: On
GAM_G_AREA1 to GAM_G_AREA8	GAM_G_TH_01 to GAM_G_TH_31 [7:0]	*	Start Threshold of Area 1 to 31 of G Signal Unsigned (0 to 255 [LSB]) Threshold of previous area*1 ≤ Threshold of current area < Threshold of next area*2 *1: GAM_G_TH_01 is 0 *2: GAM_G_TH_31 is 255 *Initial Value GAM_G_TH_01:8, GAM_G_TH_02:16, GAM_G_TH_03:24, GAM_G_TH_04:32, GAM_G_TH_05:40, GAM_G_TH_06:48, GAM_G_TH_07:56, GAM_G_TH_08:64, GAM_G_TH_09:72, GAM_G_TH_10:80 GAM_G_TH_11:88, GAM_G_TH_12:96, GAM_G_TH_13:104, GAM_G_TH_14:112, GAM_G_TH_15:120, GAM_G_TH_16:128, GAM_G_TH_17:136, GAM_G_TH_18:144, GAM_G_TH_19:152, GAM_G_TH_20:160, GAM_G_TH_21:168, GAM_G_TH_22:176, GAM_G_TH_23:184, GAM_G_TH_24:192, GAM_G_TH_25:200, GAM_G_TH_26:208, GAM_G_TH_27:216, GAM_G_TH_28:224, GAM_G_TH_29:232, GAM_G_TH_30:240, GAM_G_TH_31:248

chanhvinh.com

Register Name	Bit Name	Initial Value	Description
GAM_G_LUT1 to GAM_G_LUT16	GAM_G_GAIN_00 to GAM_G_GAIN_31 [10:0]	1024	Gain Adjustment of Area 0 to 31 of G Signal Unsigned (0 to 2047 [LSB], 1024 [LSB] = 1.0 [times])
GAM_B_AREA1 to GAM_B_AREA8	GAM_B_TH_01 to GAM_B_TH_31 [7:0]	*	Start Threshold of Area 1 to 31 of B Signal Unsigned (0 to 255 [LSB]) Threshold of previous area*1 ≤ Threshold of current area < Threshold of next area*2 *1: GAM_B_TH_01 is 0 *2: GAM_B_TH_31 is 255 *Initial Value GAM_B_TH_01:8, GAM_B_TH_02:16, GAM_B_TH_03:24, GAM_B_TH_04:32, GAM_B_TH_05:40, GAM_B_TH_06:48, GAM_B_TH_07:56, GAM_B_TH_08:64, GAM_B_TH_09:72, GAM_B_TH_10:80 GAM_B_TH_11:88, GAM_B_TH_12:96, GAM_B_TH_13:104, GAM_B_TH_14:112, GAM_B_TH_15:120, GAM_B_TH_16:128, GAM_B_TH_17:136, GAM_B_TH_18:144, GAM_B_TH_19:152, GAM_B_TH_20:160, GAM_B_TH_21:168, GAM_B_TH_22:176, GAM_B_TH_23:184, GAM_B_TH_24:192, GAM_B_TH_25:200, GAM_B_TH_26:208, GAM_B_TH_27:216, GAM_B_TH_28:224, GAM_B_TH_29:232, GAM_B_TH_30:240, GAM_B_TH_31:248
GAM_B_LUT1 to GAM_B_LUT16	GAM_B_GAIN_00 to GAM_B_GAIN_31 [10:0]	1024	Gain Adjustment of Area 0 to 31 of B Signal Unsigned (0 to 2047 [LSB], 1024 [LSB] = 1.0 [times])

chanhvinh.com

Register Name	Bit Name	Initial Value	Description
GAM_R_AREA1 to GAM_R_AREA8	GAM_R_TH_01 to GAM_R_TH_31 [7:0]	*	Start Threshold of Area 1 to 31 of R Signal Unsigned (0 to 255 [LSB]) Threshold of previous area*1 ≤ Threshold of current area < Threshold of next area*2 *1: GAM_R_TH_01 is 0 *2: GAM_R_TH_31 is 255 *Initial Value GAM_R_TH_01:8, GAM_R_TH_02:16, GAM_R_TH_03:24, GAM_R_TH_04:32, GAM_R_TH_05:40, GAM_R_TH_06:48, GAM_R_TH_07:56, GAM_R_TH_08:64, GAM_R_TH_09:72, GAM_R_TH_10:80 GAM_R_TH_11:88, GAM_R_TH_12:96, GAM_R_TH_13:104, GAM_R_TH_14:112, GAM_R_TH_15:120, GAM_R_TH_16:128, GAM_R_TH_17:136, GAM_R_TH_18:144, GAM_R_TH_19:152, GAM_R_TH_20:160, GAM_R_TH_21:168, GAM_R_TH_22:176, GAM_R_TH_23:184, GAM_R_TH_24:192, GAM_R_TH_25:200, GAM_R_TH_26:208, GAM_R_TH_27:216, GAM_R_TH_28:224, GAM_R_TH_29:232, GAM_R_TH_30:240, GAM_R_TH_31:248
GAM_R_LUT1 to GAM_R_LUT16	GAM_R_GAIN_00 to GAM_R_GAIN_31 [10:0]	1024	Gain Adjustment of Area 0 to 31 of R Signal Unsigned (0 to 2047 [LSB], 1024 [LSB] = 1.0 [times])

chanhvinh.com

36.1.7 Dither Process

Dither process is carried out by adjusting brightness/contrast or reducing 10-bit RGB signals output from the gamma correction block to 8-bit, 6-bit, or 5-bit RGB signals. The operation mode of dither process can be selected from truncate mode, round-off mode, 2 × 2 pattern dither mode and random pattern dither mode.

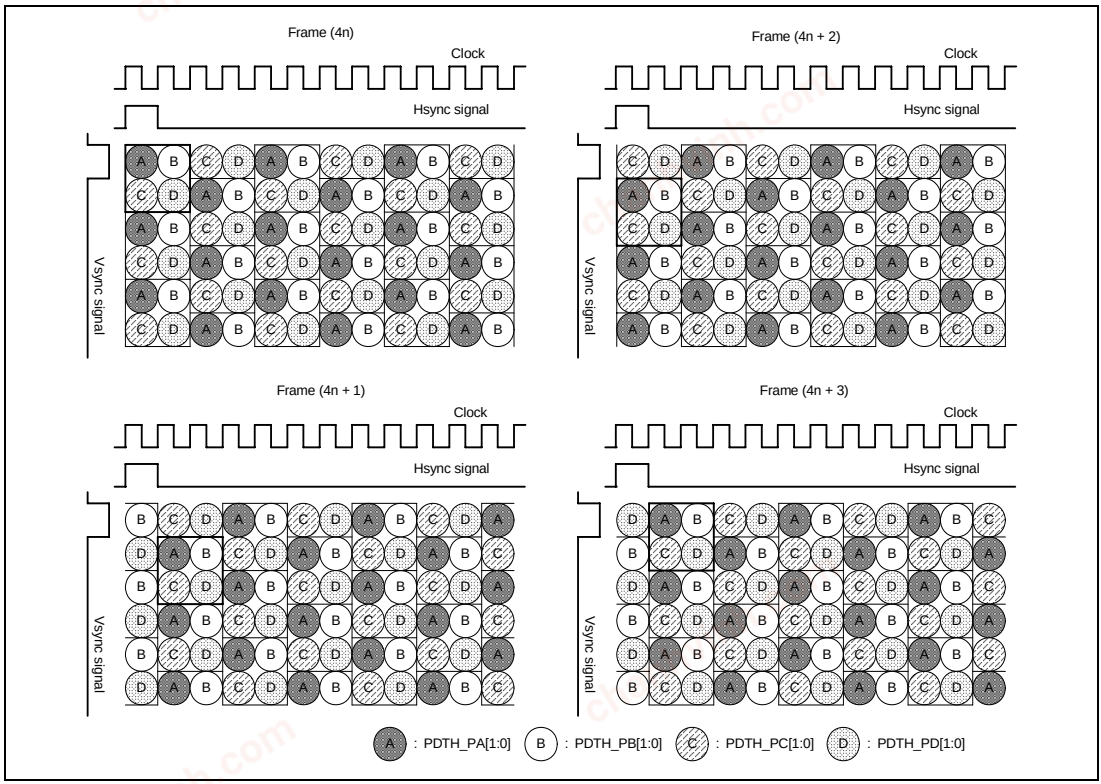

Figure 36.4 Operation Specification of 2 × 2 Pattern Dither

chanhvinh.com

The conversion equations are as follows.

[Truncate mode]

(a) 10 bits to 8 bits

Output RGB data[7:0] = Input RGB data[9:0] ÷ 4 (truncate the number below the decimal point)

(b) 10 bits to 6 bits

Output RGB data[7:2] = Input RGB data[9:0] ÷ 16 (truncate the number below the decimal point)

(c) 10 bits to 5 bits

Output RGB data[7:3] = Input RGB data[9:0] ÷ 32 (truncate the number below the decimal point)

[Round-off mode]

(a) 10 bits to 8 bits

Output RGB data[7:0] = Input RGB data[9:0] ÷ 4 (round off to an integer)

(b) 10 bits to 6 bits

Output RGB data[7:2] = Input RGB data[9:0] ÷ 16 (round off to an integer)

(c) 10 bits to 5 bits

Output RGB data[7:3] = Input RGB data[9:0] ÷ 32 (round off to an integer)

[2 × 2 pattern dither mode, random pattern dither mode]

(a) 10 bits to 8 bits

Output RGB data[7:0] = Input RGB data[9:0] ÷ 4 + pattern value at the first decimal place (truncate the number below the decimal point after addition)

(b) 10 bits to 6 bits

Output RGB data[7:2] = Input RGB data[9:0] ÷ 16 + pattern value at the first decimal place (truncate the number below the decimal point after addition)

chanhvinh.com

(c) 10 bits to 5 bits

Output RGB data[7:3] = Input RGB data[9:0] ÷ 32 + pattern value at the first decimal place (truncate the number below the decimal point after addition)

Table 36.6 Panel Dither Correction

Register Name	Bit Name	Initial Value	Description
OUT_PDTHA	PDTH_SEL[1:0]	0	Panel Dither Operation Mode 0: Truncate 1: Round-off 2: 2 × 2 pattern dither 3: Random pattern dither
OUT_PDTHA	PDTH_FORMAT[1:0]	0	Panel Dither Output Format Select 0: RGB888 1: RGB666 2: RGB565 3: Setting prohibited
OUT_PDTHA	PDTH_PA[1:0]	3	Pattern Value (A) of 2 × 2 Pattern Dither Unsigned (0 to 3 [LSB])
OUT_PDTHA	PDTH_PB[1:0]	0	Pattern Value (B) of 2 × 2 Pattern Dither Unsigned (0 to 3 [LSB])
OUT_PDTHA	PDTH_PC[1:0]	2	Pattern Value (C) of 2 × 2 Pattern Dither Unsigned (0 to 3 [LSB])
OUT_PDTHA	PDTH_PD[1:0]	1	Pattern Value (D) of 2 × 2 Pattern Dither Unsigned (0 to 3 [LSB])

chanhvinh.com

36.1.8 Output Format Conversion

In output format conversion, the RGB signal after dither process is converted to LCD output signal having any of the following formats, namely, parallel RGB888, parallel RGB666, parallel RGB565, and serial RGB.

Further, converted data can be allocated to LCD output pins as selected.

(1) Bit Allocation of LCD Signals for RGB888 Output

Table 36.7 shows the RGB signal input allocated to the LCD signal output for RGB888 output.

R/G/BIN[7:0] are the RGB internal signals after dither process.

Table 36.7 Bit Allocation of RGB Signal Input for RGB888 Output

OUT_FORMAT	**0**	**0**	**0**	**0**
OUT_ENDIAN_ON	**0**	**0**	**1**	**1**
OUT_SWAP_ON	**0**	**1**	**0**	**1**
LCD_DATA23	RIN[7]	BIN[7]	RIN[0]	BIN[0]
LCD_DATA22	RIN[6]	BIN[6]	RIN[1]	BIN[1]
LCD_DATA21	RIN[5]	BIN[5]	RIN[2]	BIN[2]
LCD_DATA20	RIN[4]	BIN[4]	RIN[3]	BIN[3]
LCD_DATA19	RIN[3]	BIN[3]	RIN[4]	BIN[4]
LCD_DATA18	RIN[2]	BIN[2]	RIN[5]	BIN[5]
LCD_DATA17	RIN[1]	BIN[1]	RIN[6]	BIN[6]
LCD_DATA16	RIN[0]	BIN[0]	RIN[7]	BIN[7]
LCD_DATA15	GIN[7]	GIN[7]	GIN[0]	GIN[0]
LCD_DATA14	GIN[6]	GIN[6]	GIN[1]	GIN[1]
LCD_DATA13	GIN[5]	GIN[5]	GIN[2]	GIN[2]
LCD_DATA12	GIN[4]	GIN[4]	GIN[3]	GIN[3]
LCD_DATA11	GIN[3]	GIN[3]	GIN[4]	GIN[4]
LCD_DATA10	GIN[2]	GIN[2]	GIN[5]	GIN[5]

chanhvinh.com

OUT_FORMAT	**0**	**0**	**0**	**0**
OUT_ENDIAN_ON	**0**	**0**	**1**	**1**
OUT_SWAP_ON	**0**	**1**	**0**	**1**
LCD_DATA9	GIN[1]	GIN[1]	GIN[6]	GIN[6]
LCD_DATA8	GIN[0]	GIN[0]	GIN[7]	GIN[7]
LCD_DATA7	BIN[7]	RIN[7]	BIN[0]	RIN[0]
LCD_DATA6	BIN[6]	RIN[6]	BIN[1]	RIN[1]
LCD_DATA5	BIN[5]	RIN[5]	BIN[2]	RIN[2]
LCD_DATA4	BIN[4]	RIN[4]	BIN[3]	RIN[3]
LCD_DATA3	BIN[3]	RIN[3]	BIN[4]	RIN[4]
LCD_DATA2	BIN[2]	RIN[2]	BIN[5]	RIN[5]
LCD_DATA1	BIN[1]	RIN[1]	BIN[6]	RIN[6]
LCD_DATA0	BIN[0]	RIN[0]	BIN[7]	RIN[7]

(2) Bit Allocation of LCD Signal for RGB666 Output

Table 36.8 shows the RGB signal input allocated to the LCD signal output for RGB666 output.

R/G/BIN[7:0] are the RGB internal signals after dither process.

Table 36.8 Bit Allocation of RGB Signal Input for RGB666 Output

OUT_FORMAT	**1**	**1**	**1**	**1**
OUT_ENDIAN_ON	**0**	**0**	**1**	**1**
OUT_SWAP_ON	**0**	**1**	**0**	**1**
LCD_DATA23	Fixed to 0	Fixed to 0	Fixed to 0	Fixed to 0
LCD_DATA22	Fixed to 0	Fixed to 0	Fixed to 0	Fixed to 0
LCD_DATA21	Fixed to 0	Fixed to 0	Fixed to 0	Fixed to 0
LCD_DATA20	Fixed to 0	Fixed to 0	Fixed to 0	Fixed to 0
LCD_DATA19	Fixed to 0	Fixed to 0	Fixed to 0	Fixed to 0
LCD_DATA18	Fixed to 0	Fixed to 0	Fixed to 0	Fixed to 0
LCD_DATA17	RIN[7]	BIN[7]	RIN[2]	BIN[2]
LCD_DATA16	RIN[6]	BIN[6]	RIN[3]	BIN[3]
LCD_DATA15	RIN[5]	BIN[5]	RIN[4]	BIN[4]

chanhvinh.com

OUT_FORMAT	**1**	**1**	**1**	**1**
OUT_ENDIAN_ON	**0**	**0**	**1**	**1**
OUT_SWAP_ON	**0**	**1**	**0**	**1**
LCD_DATA14	RIN[4]	BIN[4]	RIN[5]	BIN[5]
LCD_DATA13	RIN[3]	BIN[3]	RIN[6]	BIN[6]
LCD_DATA12	RIN[2]	BIN[2]	RIN[7]	BIN[7]
LCD_DATA11	GIN[7]	GIN[7]	GIN[2]	GIN[2]
LCD_DATA10	GIN[6]	GIN[6]	GIN[3]	GIN[3]
LCD_DATA9	GIN[5]	GIN[5]	GIN[4]	GIN[4]
LCD_DATA8	GIN[4]	GIN[4]	GIN[5]	GIN[5]
LCD_DATA7	GIN[3]	GIN[3]	GIN[6]	GIN[6]
LCD_DATA6	GIN[2]	GIN[2]	GIN[7]	GIN[7]
LCD_DATA5	BIN[7]	RIN[7]	BIN[2]	RIN[2]
LCD_DATA4	BIN[6]	RIN[6]	BIN[3]	RIN[3]
LCD_DATA3	BIN[5]	RIN[5]	BIN[4]	RIN[4]
LCD_DATA2	BIN[4]	RIN[4]	BIN[5]	RIN[5]
LCD_DATA1	BIN[3]	RIN[3]	BIN[6]	RIN[6]
LCD_DATA0	BIN[2]	RIN[2]	BIN[7]	RIN[7]

chanhvinh.com

(3) Bit Allocation of LCD Signal for RGB565 Output

Table 36.9 shows the RGB signal input allocated to the LCD signal output for RGB565 output.

R/G/BIN[7:0] are the RGB internal signals after dither process.

Table 36.9 Bit Allocation of RGB Signal Input for RGB565 Output

OUT_FORMAT	**2**	**2**	**2**	**2**
OUT_ENDIAN_ON	**0**	**0**	**1**	**1**
OUT_SWAP_ON	**0**	**1**	**0**	**1**
LCD_DATA23	Fixed to 0	Fixed to 0	Fixed to 0	Fixed to 0
LCD_DATA22	Fixed to 0	Fixed to 0	Fixed to 0	Fixed to 0
LCD_DATA21	Fixed to 0	Fixed to 0	Fixed to 0	Fixed to 0
LCD_DATA20	Fixed to 0	Fixed to 0	Fixed to 0	Fixed to 0
LCD_DATA19	Fixed to 0	Fixed to 0	Fixed to 0	Fixed to 0
LCD_DATA18	Fixed to 0	Fixed to 0	Fixed to 0	Fixed to 0
LCD_DATA17	Fixed to 0	Fixed to 0	Fixed to 0	Fixed to 0
LCD_DATA16	Fixed to 0	Fixed to 0	Fixed to 0	Fixed to 0
LCD_DATA15	RIN[7]	BIN[7]	RIN[3]	BIN[3]
LCD_DATA14	RIN[6]	BIN[6]	RIN[4]	BIN[4]
LCD_DATA13	RIN[5]	BIN[5]	RIN[5]	BIN[5]
LCD_DATA12	RIN[4]	BIN[4]	RIN[6]	BIN[6]
LCD_DATA11	RIN[3]	BIN[3]	RIN[7]	BIN[7]
LCD_DATA10	GIN[7]	GIN[7]	GIN[2]	GIN[2]
LCD_DATA9	GIN[6]	GIN[6]	GIN[3]	GIN[3]
LCD_DATA8	GIN[5]	GIN[5]	GIN[4]	GIN[4]
LCD_DATA7	GIN[4]	GIN[4]	GIN[5]	GIN[5]
LCD_DATA6	GIN[3]	GIN[3]	GIN[6]	GIN[6]
LCD_DATA5	GIN[2]	GIN[2]	GIN[7]	GIN[7]
LCD_DATA4	BIN[7]	RIN[7]	BIN[3]	RIN[3]
LCD_DATA3	BIN[6]	RIN[6]	BIN[4]	RIN[4]
LCD_DATA2	BIN[5]	RIN[5]	BIN[5]	RIN[5]
LCD_DATA1	BIN[4]	RIN[4]	BIN[6]	RIN[6]
LCD_DATA0	BIN[3]	RIN[3]	BIN[7]	RIN[7]

chanhvinh.com

(4) Bit Allocation of LCD Signal for Serial RGB Output

For serial RGB output, RGB signal input shown table 36.10 is allocated to rgb internal signals and the signals are converted from parallel to serial format and output as LCD signals. R/G/BIN[7:0] are the RGB internal signals after dither process.

The internal signals r[7:0], g[7:0], and b[7:0] are serially output to LCD_DATA7 to LCD_DATA0.

Table 36.10 Bit Allocation of RGB Signal Input for Serial RGB Output

OUT_FORMAT	3	3	3	3
OUT_ENDIAN_ON	0	0	1	1
OUT_SWAP_ON	0	1	0	1
r[7]	RIN[7]	BIN[7]	RIN[0]	BIN[0]
r[6]	RIN[6]	BIN[6]	RIN[1]	BIN[1]
r[5]	RIN[5]	BIN[5]	RIN[2]	BIN[2]
r[4]	RIN[4]	BIN[4]	RIN[3]	BIN[3]
r[3]	RIN[3]	BIN[3]	RIN[4]	BIN[4]
r[2]	RIN[2]	BIN[2]	RIN[5]	BIN[5]
r[1]	RIN[1]	BIN[1]	RIN[6]	BIN[6]
r[0]	RIN[0]	BIN[0]	RIN[7]	BIN[7]
g[7]	GIN[7]	GIN[7]	GIN[0]	GIN[0]
g[6]	GIN[6]	GIN[6]	GIN[1]	GIN[1]
g[5]	GIN[5]	GIN[5]	GIN[2]	GIN[2]
g[4]	GIN[4]	GIN[4]	GIN[3]	GIN[3]
g[3]	GIN[3]	GIN[3]	GIN[4]	GIN[4]
g[2]	GIN[2]	GIN[2]	GIN[5]	GIN[5]
g[1]	GIN[1]	GIN[1]	GIN[6]	GIN[6]
g[0]	GIN[0]	GIN[0]	GIN[7]	GIN[7]
b[7]	BIN[7]	RIN[7]	BIN[0]	RIN[0]
b[6]	BIN[6]	RIN[6]	BIN[1]	RIN[1]

chanhvinh.com

OUT_FORMAT	**3**	**3**	**3**	**3**
OUT_ENDIAN_ON	**0**	**0**	**1**	**1**
OUT_SWAP_ON	**0**	**1**	**0**	**1**
b[5]	BIN[5]	RIN[5]	BIN[2]	RIN[2]
b[4]	BIN[4]	RIN[4]	BIN[3]	RIN[3]
b[3]	BIN[3]	RIN[3]	BIN[4]	RIN[4]
b[2]	BIN[2]	RIN[2]	BIN[5]	RIN[5]
b[1]	BIN[1]	RIN[1]	BIN[6]	RIN[6]
b[0]	BIN[0]	RIN[0]	BIN[7]	RIN[7]

(5) Parallel to Serial Conversion

As shown in table 36.11, four types of parallel to serial conversions are possible by controlling clock speed mode and selecting the scan direction (‘n’ in the table are natural numbers).

Table 36.11 Specifications of Serial RGB Output

OUT_FRQ_SEL	**1**	**1**	**2**	**2**
OUT_DIR_SEL	**0**	**1**	**0**	**1**
Line (2n-1)	Repeated (r → g → b)	Repeated (b → g → r)	Repeated (r → g → b → X)	Repeated (X → b → g → r)
Line 2n	Repeated (g → b → r)	Repeated (r → b → g)	Repeated (r → g → b → X)	Repeated (X → b → g → r)

Figures 36.5 and 36.6 show the timing of parallel to serial conversion in triple speed and quadruple speed modes, respectively.

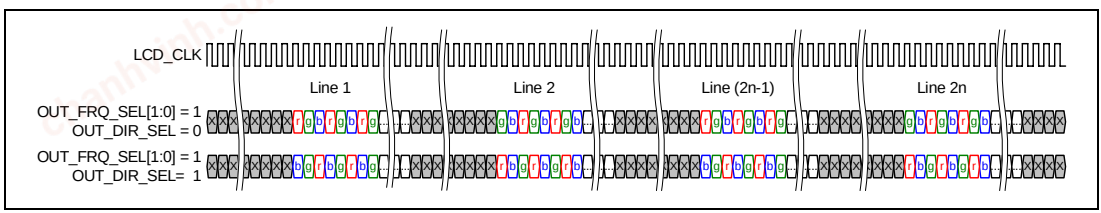

Figure 36.5 Timing of Parallel to Serial Conversion in Triple Speed Mode

chanhvinh.com

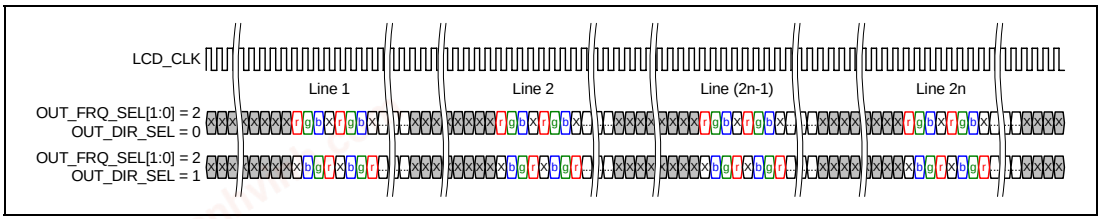

Figure 36.6 Timing of Parallel to Serial Conversion in Quadruple Speed Mode

During serial output, the phase timing with the HE signal can be adjusted by OUT_PHASE[0:1].

Figure 36.7 shows the timing of the clock phases of the serial RGB output (triple speed mode).

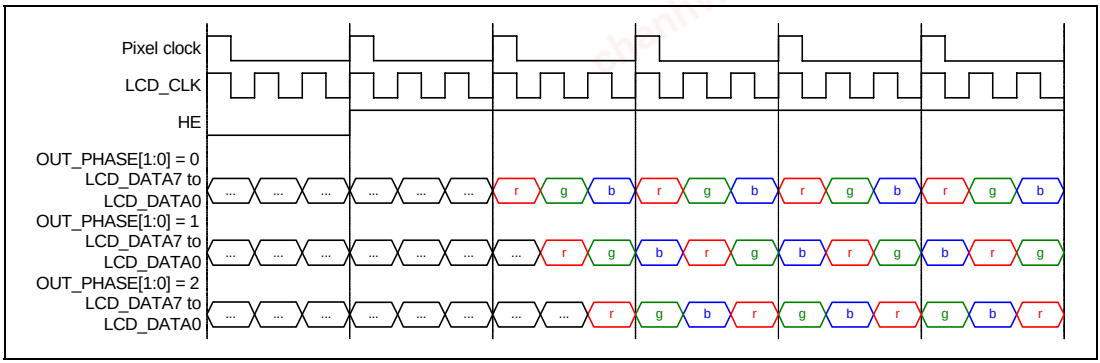

Figure 36.7 Timing of Clock Phases of Serial RGB Output (Triple Speed Mode)

Figure 36.8 shows the timing of the clock phases of the serial RGB output (quadruple speed mode).

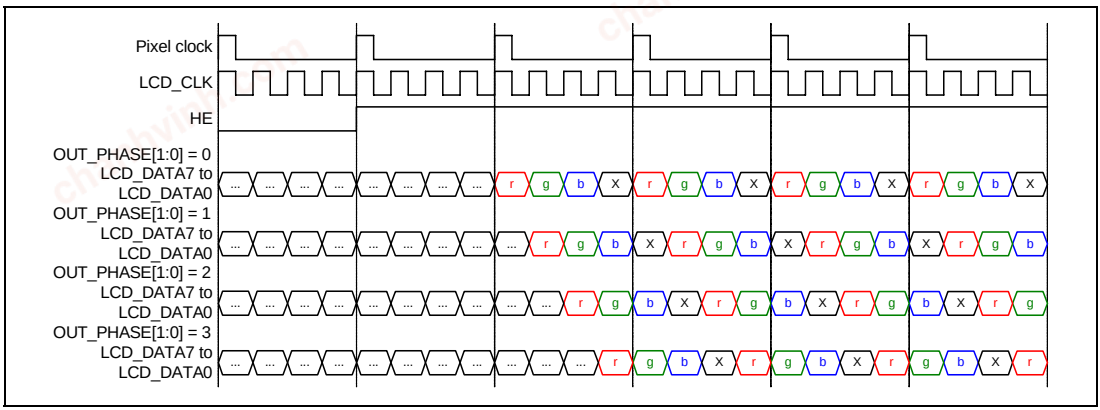

Figure 36.8 Timing of Clock Phases of Serial RGB Output (Quadruple Speed Mode)

chanhvinh.com

Table 36.12 Output Format Conversion

Register Name	Bit Name	Initial Value	Description
OUT_SET	OUT_FORMAT[1:0]	0	Output Format Select 0: RBG888 1: RGB666 2: RGB565 3: Serial RGB
OUT_SET	OUT_ENDIAN_ON	0	Bit Endian Change On/Off Control 0: Off 1: On
OUT_SET	OUT_SWAP_ON	0	B/R Signal Swap On/Off Control 0: Off 1: On
OUT_SET	OUT_FRQ_SEL[1:0]	0	Clock Frequency Control 0: 100% speed — (parallel RGB) 1: Triple speed — (serial RGB) 2: Quadruple speed — (serial RGB) 3: Setting prohibited
OUT_SET	OUT_DIR_SEL	0	Scan Direction Select 0: Forward scan 1: Reverse scan
OUT_SET	OUT_PHASE[1:0]	0	Clock Phase Adjustment for Serial RGB Output Triple speed mode 0: 0 (clk) 1: 1 (clk) 2: 2 (clk) 3: Setting prohibited Quadruple speed mode 0: 0 (clk) 1: 1 (clk) 2: 2 (clk) 3: 3 (clk)

chanhvinh.com

36.1.9 LCD TCON

The LCD TCON generates various timing signals for driving the LCD panel.

Specifically, the timing include two vertical panel driver signals, five horizontal panel driver signals, and one composite signal of the vertical and horizontal panel driver signals. Table 36.13 lists the timing signals that are generated by LCD TCON

Table 36.13 Signals Generated by LCD TCON

Signal Name	Type	Description
STVA/VS	Vertical	• Gate start signal The pulse width, pulse position, and pulse polarity of the signal can be controlled. • Vsync signal The width, position, and polarity of the sync signal can be controlled.
STVB/VE	Vertical	• Gate start signal The pulse width, pulse position, and pulse polarity of the signal can be controlled. • Vertical enable signal The width, position, and polarity of the sync signal can be controlled.
STH/SP/HS	Horizontal	• Source start signal The pulse width, pulse position, and pulse polarity of the signal can be controlled. • Hsync signal The width, position, and polarity of the sync signal can be controlled.
STB/LP/HE	Horizontal	• Source strobe signal The pulse width, pulse position, and pulse polarity of the signal can be controlled. • Horizontal enable signal The width, position, and polarity of the enable signal can be controlled.

chanhvinh.com

Signal Name	Type	Description
CPV/GCK	Horizontal	• Gate clock signal The pulse width, pulse position, and pulse polarity of the signal can be controlled.
POLA	Horizontal	• VCOM voltage polarity control signal The polarity inversion position, and polarity inversion operation (1x1, 1x2, 2x2) can be controlled.
POLB	Horizontal	• VCOM voltage polarity control signal The polarity inversion position, and polarity inversion operation (1x1, 1x2, 2x2) can be controlled.
DE	Horizontal/Vertical	• Data enable signal The width, position, and polarity of the enable signal can be controlled.

(1) Horizontal Reference Offset Control

The horizontal reference offset control enables generation of a reference signal with a clock delay equivalent to the value of TCON_OFFSET[10:0] from the rising edge of the Hsync signal. If a signal that spans across the Hsync signal needs to be generated, such a signal is generated with reference to the offset reference signal.

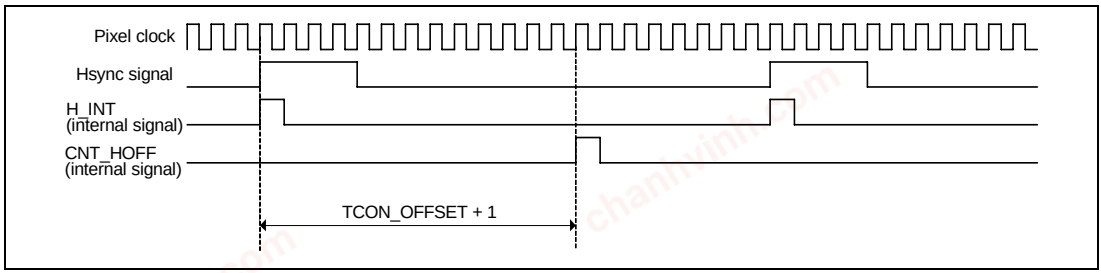

Figure 36.9 Generation of Offset Horizontal Reference (H_OFF) Signal

chanhvinh.com

Table 36.14 Horizontal Reference Signal Selection

Signal Name	Bit Name	Initial Value	Description
TCON_TIM	TCON_OFFSET [10:0]	0	Offset Hsync Signal Timing Sets the clock cycle count from the rising edge of the Hsync signal.
TCON_TIM_STH2	TCON_STH_HS_SEL	0	STH Signal Operating Reference Select 0: Hsync signal reference 1: Offset Hsync signal reference
TCON_TIM_STB2	TCON_STB_HS_SEL	0	STB Signal Operating Reference Select 0: Hsync signal reference 1: Offset Hsync signal reference
TCON_TIM_CPV2	TCON_CPV_HS_SEL	0	CPV Signal Operating Reference Select 0: Hsync signal reference 1: Offset Hsync signal reference
TCON_TIM_POLA2	TCON_POLA_HS_SEL	0	POLA Signal Operating Reference Select 0: Hsync signal reference 1: Offset Hsync signal reference
TCON_TIM_POLB2	TCON_POLB_HS_SEL	0	POLB Signal Operating Reference Select 0: Hsync signal reference 1: Offset Hsync signal reference

Note: When generating the POLA and POLB signals in reverse mode, the bits TCON_POLA_HS_SEL and TCON_POLB_HS_SEL should be set to 0.

chanhvinh.com

(2) Horizontal Panel Driver Signal Generation (A)

Horizontal synchronous panel driver signal generation (A) involves generation of a timing signal that changes twice in a horizontal period according to the values of TCON_xxxx_HS[10:0] and TCON_xxxx_HW[10:0] bits, which set the first changing timing and the second changing timing, respectively.

The internal counter performs the following operations.

1. Resets the counter value at the rising edge of the Hsync signal as the reference.

2. Increments the counter value at the rising edge of the panel clock.

A fixed output value of 0 can be obtained by setting 0 in TCON_xxxx_HW[10:0], which set the second changing timing.

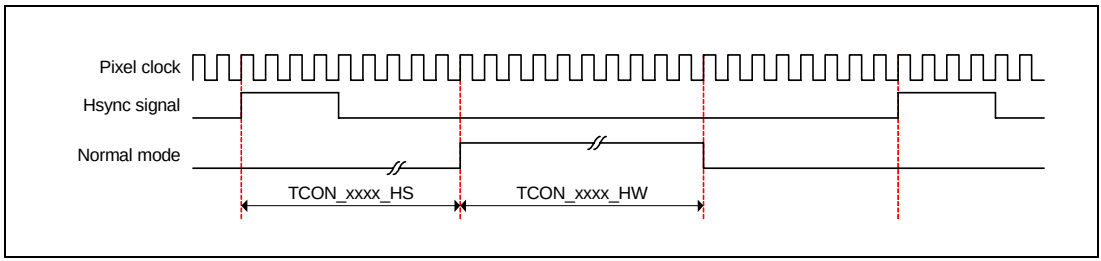

Figure 36.10 Horizontal Panel Driver Signal (in Normal Mode)

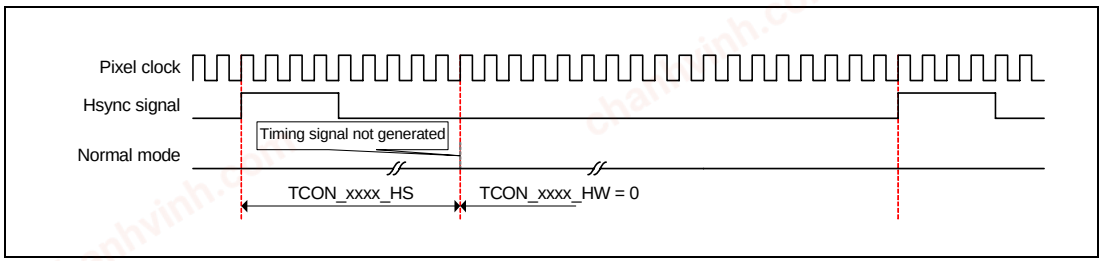

Figure 36.11 Horizontal Panel Driver Signal (in Normal Mode and When TCON_xxxx_HW_ = 0)

chanhvinh.com

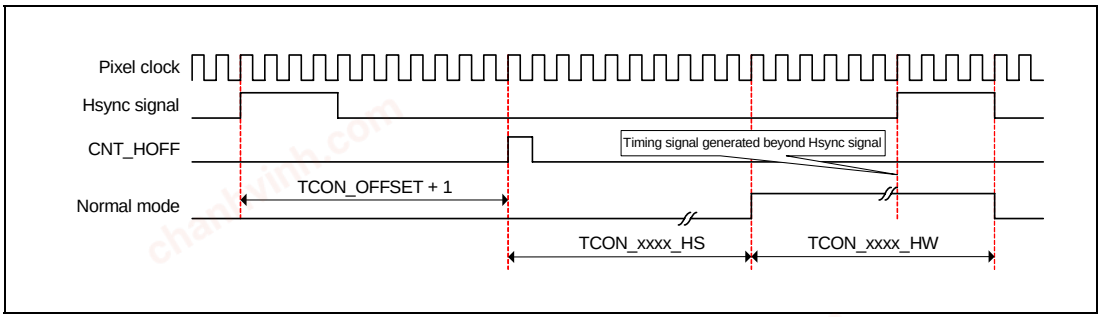

Figure 36.12 Horizontal Panel Driver Signal (in Normal Mode and When Offset Horizontal Reference is Used)

Table 36.15 Settings for Horizontal Panel Driver Signal Generation (A)

Register Name	Bit Name	Initial Value	Description
TCON_TIM_STH1	TCON_STH_HS [10:0]	0	STH Signal Pulse Start Position (First Changing Timing) Starts pulse output after the time specified by the value of TCON_STH_HS from the rising edge of the Hsync signal (clock cycles)
TCON_TIM_STH1	TCON_STH_HW [10:0]	96	STH Pulse Width (Second Changing Timing) Outputs a pulse of the duration of the value of TCON_STH_HW (clock cycles)
TCON_TIM_STB1	TCON_STB_HS [10:0]	144	STB Signal Pulse Start Position (First Changing Timing) Starts pulse output after the time specified by the value of TCON_STB_HS from the rising edge of the Hsync signal (clock cycles)
TCON_TIM_STB1	TCON_STB_HW [10:0]	640	STB Pulse Width (Second Changing Timing) Outputs a pulse of the duration of the value of TCON_STB_HW (clock cycles)
TCON_TIM_CPV1	TCON_CPV_HS [10:0]	0	CPV Signal Pulse Start Position (First Changing Timing) Starts pulse output after the time specified by the value of TCON_CPV_HS from the rising edge of the Hsync signal (clock cycles)
TCON_TIM_CPV1	TCON_CPV_HW [10:0]	0	CPV Pulse Width (Second Changing Timing) Outputs a pulse of the duration of the value of TCON_CPV_HW (clock cycles)

chanhvinh.com

(3) Horizontal Panel Driver Signal Generation (B)

In addition to the normal mode operation described in (2), reverse mode operation, that is, horizontal panel driver signal generation (B) is provided. In reverse mode, operation starts at the rising edge of the Vsync signal as the reference and a signal is generated such that its polarity is inverted every horizontal period in the timing set by the TCON_xxxx_HS[10:0] bits, which set the first changing timing.

In reverse mode, regardless of whether the number of lines in the vertical direction is odd or even, the polarity of the signals generated is inverted every horizontal period. The following three reverse modes are selectable for polarity inversion operation.

Table 36.16 Horizontal Panel Driver Signal Generation Modes

Register Name	Bit Name	Initial Value	Description
TCON_TIM_POLA2	TCON_POLA_MD [1:0]	1	POLA Signal Generation Mode Select 0: Normal mode Generates the signal that changes twice a horizontal period. 1: 1 x 1 reverse mode Generates the signal whose polarity is inverted every horizontal period. 2: 1 x 2 reverse mode Generates the signal whose polarity is inverted in the first horizontal period and is subsequently inverted every two horizontal periods. 3: 2 x 2 reverse mode Generates the signal whose polarity is inverted every two horizontal periods.

chanhvinh.com

Register Name	Bit Name	Initial Value	Description
TCON_TIM_POLB2	TCON_POLB_MD [1:0]	1	POLB Signal Generation Mode Select 0: Normal mode Generates the signal that changes twice a horizontal period. 1: 1 x 1 reverse mode Generates the signal whose polarity is inverted every horizontal period. 2: 1 x 2 reverse mode Generates the signal whose polarity is inverted in the first horizontal period and is subsequently inverted every two horizontal periods. 3: 2 x 2 reverse mode Generates the signal whose polarity is inverted every two horizontal periods.

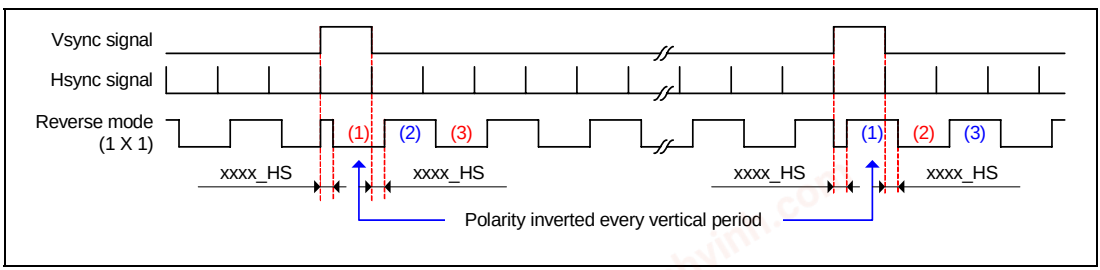

Figure 36.13 Horizontal Panel Driver Signal (in 1 × 1 Reverse Mode)

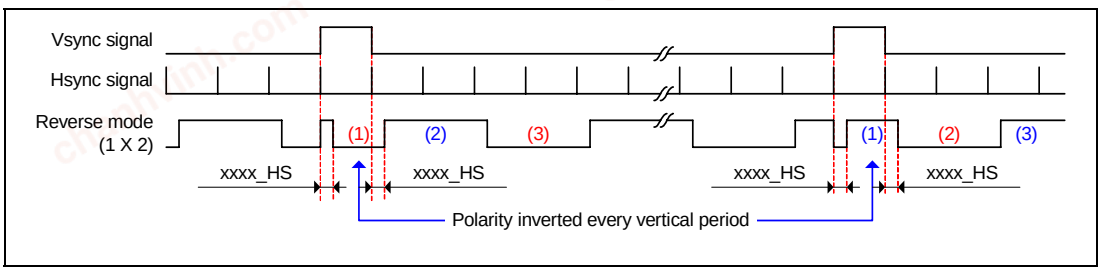

Figure 36.14 Horizontal Panel Driver Signal (in 1 × 2 Reverse Mode)

chanhvinh.com

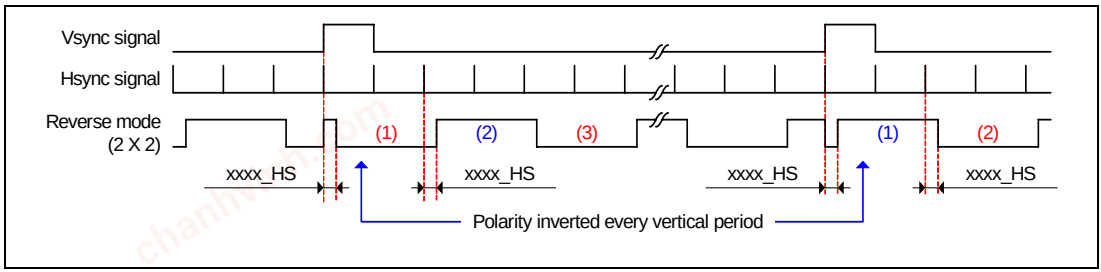

Figure 36.15 Horizontal Panel Driver Signal (in 2 × 2 Reverse Mode)

Table 36.17 Settings of Horizontal Panel Driver Signal Generation (B)

Register Name	Bit Name	Initial Value	Description
TCON_TIM_POLA1	TCON_POLA_HS [10:0]	0	POLA Signal Pulse Start Position (First Changing Timing) Starts pulse output after the time specified by the value of TCON_POLA_HS + 1 from the rising edge of the Hsync signal (clock cycles) Note: When 1 x 1, 1 x 2, or 2 x 2 reverse mode is selected, these bits should be set to 1 or greater.
TCON_TIM_POLA1	TCON_POLA_HW [10:0]	0	POLA Pulse Width (Second Changing Timing) Outputs a pulse of the duration of the value of TCON_POLA_HW (clock cycles)
TCON_TIM_POLB1	TCON_POLB_HS [10:0]	0	POLBA Signal Pulse Start Position (First Changing Timing) Starts pulse output after the time specified by the value of TCON_POLB_HS + 1 from the rising edge of the Hsync signal (clock cycles) Note: When 1 x 1, 1 x 2, or 2 x 2 reverse mode is selected, these bits should be set to1 or greater.
TCON_TIM_POLB1	TCON_POLB_HW [10:0]	0	POLB Pulse Width (Second Changing Timing) Outputs a pulse of the duration of the value of TCON_POLB_HW (clock cycles)

chanhvinh.com

(4) Vertical Panel Driver Signal Generation

The vertical synchronous panel driver signal generation involves the following operations.

1. Initialization at the rising edge of the Vsync signal
2. Generation of a timing signal that changes twice in a vertical period according to the values of the internal counter, and TCON_xxxx_VS[10:0] and TCON_xxxx_VW[10:0] bits, which set the first changing timing and the second changing timing, respectively.

The internal counter increments the counter value in the following two cases.

1. At the rising edge of the Hsync signal
2. At the point reached after a clock delay specified by the value of TCON_HALF[10:0] from the rising edge of the Hsync signal (normally, 1/2fH is set).

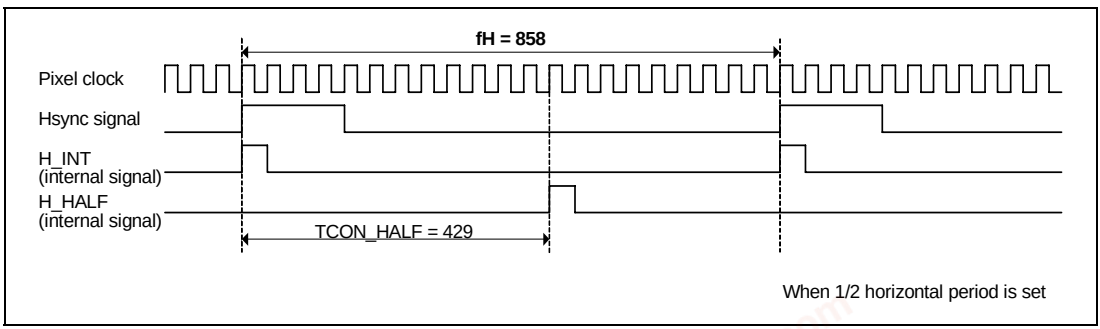

Figure 36.16 1/2 Pulse (H_HALF) Signal Generation

Table 36.18 Settings of 1/2 Pulse (H_HALF) Signal Generation

Register Name	Bit Name	Initial Value	Description
TCON_TIM	TCON_HALF[10:0]	400	1/2fH Timing Specifies the clock count from the rising edge of the Hsync signal as the counting timing of horizontal counter

chanhvinh.com

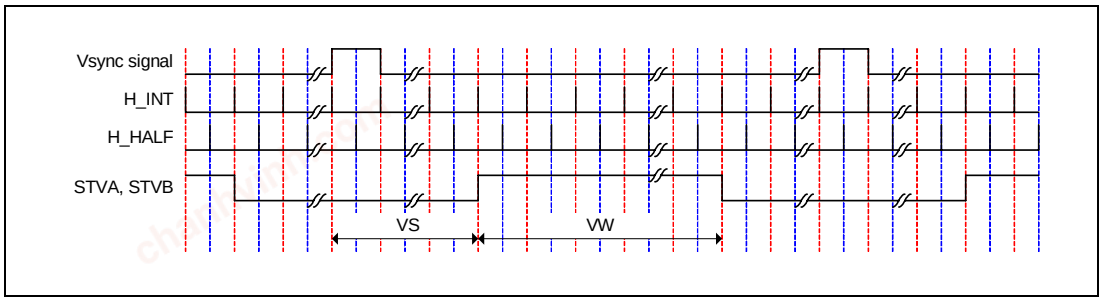

Figure 36.17 Vertical Panel Driver Signal (H_INT Reference Operation)

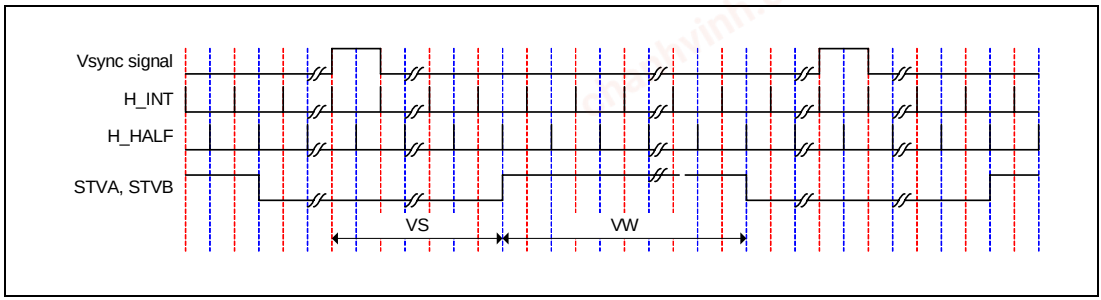

Figure 36.18 Vertical Panel Driver Signal (H_HALF Reference Operation)

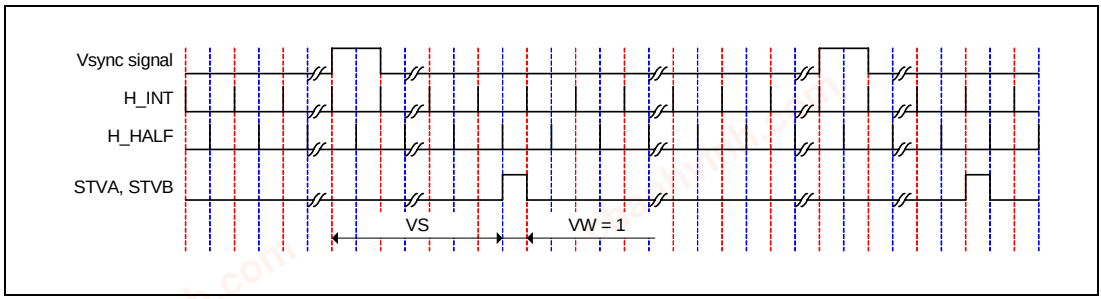

Figure 36.19 Vertical Panel Driver Signal (H_INT and H_HALF Reference Operation)

chanhvinh.com

Table 36.19 Vertical Panel Driver Signal Generation

Register Name	Bit Name	Initial Value	Description
TCON_TIM_STVA1	TCON_STVA_VS [10:0]	0	STVA Signal Pulse Start Position (First Changing Timing) Starts pulse output after the time specified by the value of TCON_STVA_HS from the rising edge of the Vsync signal (1/2fH cycles)
TCON_TIM_STVA1	TCON_STVA_VW [10:0]	4	STVA Pulse Width (Second Changing Timing) Outputs a pulse of the duration of the value of TCON_STVA_HW (1/2fH cycles)
TCON_TIM_STVB1	TCON_STVB_VS [10:0]	70	STVB Signal Pulse Start Position (First Changing Timing) Starts pulse output after the time specified by the value of TCON_STVB_HS from the rising edge of the Vsync signal (1/2fH cycles)
TCON_TIM_STVB1	TCON_STVB_VW [10:0]	960	STVB Pulse Width (Second Changing Timing) Outputs a pulse of the duration of the value of TCON_STVB_HW (1/2fH cycles)

(5) DE Timing Signal Generation

DE timing signal generation involves generation of data enable signal (DE) that indicates the valid period of the video signal by synthesizing the horizontal panel driver (HE) signal and the vertical panel driver (VE) signal (AND).

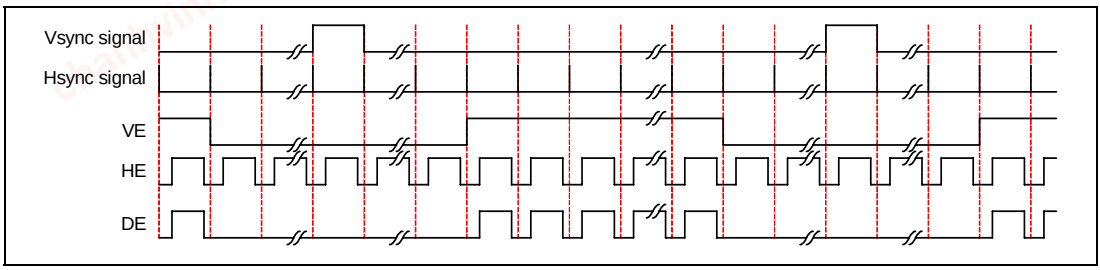

Figure 36.20 Data Enable Signal Generation

chanhvinh.com

(6) Polarity Inversion

Polarity inversion enables inversion of polarity of each signal generated by the signal generating circuit.

Table 36.20 Panel Driver Signal Polarity Inversion Control

Register Name	Bit Name	Initial Value	Description
TCON_TIM_STVA2	TCON_STVA_INV	1	Polarity Inversion Control of STVA Signal 0: Not inverted 1: Inverted
TCON_TIM_STVB2	TCON_STVB_INV	0	Polarity Inversion Control of STVB Signal 0: Not inverted 1: Inverted
TCON_TIM_STH2	TCON_STH_INV	1	Polarity Inversion Control of STH Signal 0: Not inverted 1: Inverted
TCON_TIM_STB2	TCON_STB_INV	0	Polarity Inversion Control of STB Signal 0: Not inverted 1: Inverted
TCON_TIM_CPV2	TCON_CPV_INV	0	Polarity Inversion Control of CPV Signal 0: Not inverted 1: Inverted
TCON_TIM_POLA2	TCON_POLA_INV	0	Polarity Inversion Control of POLA Signal 0: Not inverted 1: Inverted
TCON_TIM_POLB2	TCON_POLB_INV	0	Polarity Inversion Control of POLB Signal 0: Not inverted 1: Inverted
TCON_TIM_DE	TCON_DE_INV	0	Polarity Inversion Control of DE Signal 0: Not inverted 1: Inverted

chanhvinh.com

(7) Output Selection

An output pin is selected for every signal subjected to polarity inversion control.

Table 36.21 Panel Driver Signal Output Selection

Register Name	Bit Name	Initial Value	Description
TCON_TIM_STVA2	TCON_STVA_SEL [2:0]	0	Output Signal Select for LCD_TCON0 Pin 0: STVA/VS 1: STVB/VE 2: STH/SP/HS 3: STB/LP/HE 4: CPV/GCK 5: POLA 6: POLB 7: DE
TCON_TIM_STVB2	TCON_STVB_SEL [2:0]	1	Output Signal Select for LCD_TCON1 Pin 0: STVA/VS 1: STVB/VE 2: STH/SP/HS 3: STB/LP/HE 4: CPV/GCK 5: POLA 6: POLB 7: DE
TCON_TIM_STH2	TCON_STH_SEL [2:0]	2	Output Signal Select for LCD_TCON2 Pin 0: STVA/VS 1: STVB/VE 2: STH/SP/HS 3: STB/LP/HE 4: CPV/GCK 5: POLA 6: POLB 7: DE

chanhvinh.com

Register Name	Bit Name	Initial Value	Description
TCON_TIM_STB2	TCON_STB_SEL [2:0]	7	Output Signal Select for LCD_TCON3 Pin 0: STVA/VS 1: STVB/VE 2: STH/SP/HS 3: STB/LP/HE 4: CPV/GCK 5: POLA 6: POLB 7: DE
TCON_TIM_CPV2	TCON_CPV_SEL [2:0]	4	Output Signal Select for LCD_TCON4 Pin 0: STVA/VS 1: STVB/VE 2: STH/SP/HS 3: STB/LP/HE 4: CPV/GCK 5: POLA 6: POLB 7: DE
TCON_TIM_POLA2	TCON_POLA_SEL [2:0]	5	Output Signal Select for LCD_TCON5 Pin 0: STVA/VS 1: STVB/VE 2: STH/SP/HS 3: STB/LP/HE 4: CPV/GCK 5: POLA 6: POLB 7: DE

chanhvinh.com

Register Name	Bit Name	Initial Value	Description
TCON_TIM_POLB2	TCON_POLB_SEL [2:0]	6	Output Signal Select for LCD_TCON6 Pin 0: STVA/VS 1: STVB/VE 2: STH/SP/HS 3: STB/LP/HE 4: CPV/GCK 5: POLA 6: POLB 7: DE

(8) Output Phase Selection

The output phase can be individually selected for the video output signal and the various timing output signals based on the LCD_CLK (panel clock).

Table 36.22 Panel Output Signal Phase Selection

Register Name	Bit Name	Initial Value	Description
OUT_CLK_PHASE	OUTCNT_LCD_EDGE	0	Output Phase Control of LCD_DATA23 to LCD_DATA0 Pin 0: Output at the rising edge of LCD_CLK pin 1: Output at the falling edge of LCD_CLK pin
OUT_CLK_PHASE	OUTCNT_STVA_EDGE	0	Output Phase Control of LCD_TCON0 Pin 0: Output at the rising edge of LCD_CLK pin 1: Output at the falling edge of LCD_CLK pin
OUT_CLK_PHASE	OUTCNT_STVB_EDGE	0	Output Phase Control of LCD_TCON1 Pin 0: Output at the rising edge of LCD_CLK pin 1: Output at the falling edge of LCD_CLK pin
OUT_CLK_PHASE	OUTCNT_STH_EDGE	0	Output Phase Control of LCD_TCON2 Pin 0: Output at the rising edge of LCD_CLK pin 1: Output at the falling edge of LCD_CLK pin
OUT_CLK_PHASE	OUTCNT_STB_EDGE	0	Output Phase Control of LCD_TCON3 Pin 0: Output at the rising edge of LCD_CLK pin 1: Output at the falling edge of LCD_CLK pin

chanhvinh.com

Register Name	Bit Name	Initial Value	Description
OUT_CLK_PHASE	OUTCNT_CPV_EDGE	0	Output Phase Control of LCD_TCON4 Pin 0: Output at the rising edge of LCD_CLK pin 1: Output at the falling edge of LCD_CLK pin
OUT_CLK_PHASE	OUTCNT_POLA_EDGE	0	Output Phase Control of LCD_TCON5 Pin 0: Output at the rising edge of LCD_CLK pin 1: Output at the falling edge of LCD_CLK pin
OUT_CLK_PHASE	OUTCNT_POLB_EDGE	0	Output Phase Control of LCD_TCON6 Pin 0: Output at the rising edge of LCD_CLK pin 1: Output at the falling edge of LCD_CLK pin

chanhvinh.com

36.2 Register Descriptions

Table 36.23 shows the register configuration.

- Symbols used in Register Description:

  Initial value: Register value after a reset
  —: Undefined value
  R/W: Readable/writable. The written value can be read.
  R/WC0: Readable/writable. Writing 0 initializes the bit. Writing 1 is ignored.
  R/WC1: Readable/writable. Writing 1 initializes the bit. Writing 0 is ignored.
  R: Read-only. The write value should always be 0.
  —/W: Write-only. The read value is undefined.

Table 36.23 Gamma Correction Block Register Configuration

Register Name	Abbreviation	R/W	Initial Value	Address	Access Size
Register update control register G in gamma correction block	GAM_G_UPDATE	R/WC1	H'0000 0000	H'FFFF 7800	32/16
Function switch register in gamma correction block	GAM_SW	R/W	H'0000 0000	H'FFFF 7804	32/16
Table setting register G1 in gamma correction block	GAM_G_LUT1	R/W	H'0400 0400	H'FFFF 7808	32/16
Table setting register G2 in gamma correction block	GAM_G_LUT2	R/W	H'0400 0400	H'FFFF 780C	32/16
Table setting register G3 in gamma correction block	GAM_G_LUT3	R/W	H’0400 0400	H'FFFF 7810	32/16
Table setting register G4 in gamma correction block	GAM_G_LUT4	R/W	H'0400 0400	H'FFFF 7814	32/16
Table setting register G5 in gamma correction block	GAM_G_LUT5	R/W	H'0400 0400	H'FFFF 7818	32/16
Table setting register G6 in gamma correction block	GAM_G_LUT6	R/W	H’0400 0400	H'FFFF 781C	32/16
Table setting register G7 in gamma correction block	GAM_G_LUT7	R/W	H'0400 0400	H'FFFF 7820	32/16
Table setting register G8 in gamma correction block	GAM_G_LUT8	R/W	H'0400 0400	H'FFFF 7824	32/16

chanhvinh.com

Register Name	Abbreviation	R/W	Initial Value	Address	Access Size
Table setting register G9 in gamma correction block	GAM_G_LUT9	R/W	H'0400 0400	H'FFFF 7828	32/16
Table setting register G10 in gamma correction block	GAM_G_LUT10	R/W	H'0400 0400	H'FFFF 782C	32/16
Table setting register G11 in gamma correction block	GAM_G_LUT11	R/W	H'0400 0400	H'FFFF 7830	32/16
Table setting register G12 in gamma correction block	GAM_G_LUT12	R/W	H'0400 0400	H'FFFF 7834	32/16
Table setting register G13 in gamma correction block	GAM_G_LUT13	R/W	H'0400 0400	H'FFFF 7838	32/16
Table setting register G14 in gamma correction block	GAM_G_LUT14	R/W	H'0400 0400	H'FFFF 783C	32/16
Table setting register G15 in gamma correction block	GAM_G_LUT15	R/W	H'0400 0400	H'FFFF 7840	32/16
Table setting register G16 in gamma correction block	GAM_G_LUT16	R/W	H'0400 0400	H'FFFF 7844	32/16
Area setting register G1 in gamma correction block	GAM_G_AREA1	R/W	H'0008 1018	H'FFFF 7848	32/16
Area setting register G2 in gamma correction block	GAM_G_AREA2	R/W	H'2028 3038	H'FFFF 784C	32/16
Area setting register G3 in gamma correction block	GAM_G_AREA3	R/W	H'4048 5058	H'FFFF 7850	32/16
Area setting register G4 in gamma correction block	GAM_G_AREA4	R/W	H'6068 7078	H'FFFF 7854	32/16
Area setting register G5 in gamma correction block	GAM_G_AREA5	R/W	H'8088 9098	H'FFFF 7858	32/16
Area setting register G6 in gamma correction block	GAM_G_AREA6	R/W	H'A0A8 B0B8	H'FFFF 785C	32/16
Area setting register G7 in gamma correction block	GAM_G_AREA7	R/W	H'C0C8 D0D8	H'FFFF 7860	32/16
Area setting register G8 in gamma correction block	GAM_G_AREA8	R/W	H'E0E8 F0F8	H'FFFF 7864	32/16
Register update control register B in gamma correction block	GAM_B_UPDATE	R/WC1	H'0000 0000	H'FFFF 7880	32/16
Table setting register B1 in gamma correction block	GAM_B_LUT1	R/W	H'0400 0400	H'FFFF 7888	32/16

chanhvinh.com

Register Name	Abbreviation	R/W	Initial Value	Address	Access Size
Table setting register B2 in gamma correction block	GAM_B_LUT2	R/W	H'0400 0400	H'FFFF 788C	32/16
Table setting register B3 in gamma correction block	GAM_B_LUT3	R/W	H'0400 0400	H'FFFF 7890	32/16
Table setting register B4 in gamma correction block	GAM_B_LUT4	R/W	H'0400 0400	H'FFFF 7894	32/16
Table setting register B5 in gamma correction block	GAM_B_LUT5	R/W	H'0400 0400	H'FFFF 7898	32/16
Table setting register B6 in gamma correction block	GAM_B_LUT6	R/W	H'0400 0400	H'FFFF 789C	32/16
Table setting register B7 in gamma correction block	GAM_B_LUT7	R/W	H'0400 0400	H'FFFF 78A0	32/16
Table setting register B8 in gamma correction block	GAM_B_LUT8	R/W	H'0400 0400	H'FFFF 78A4	32/16
Table setting register B9 in gamma correction block	GAM_B_LUT9	R/W	H'0400 0400	H'FFFF 78A8	32/16
Table setting register B10 in gamma correction block	GAM_B_LUT10	R/W	H'0400 0400	H'FFFF 78AC	32/16
Table setting register B11 in gamma correction block	GAM_B_LUT11	R/W	H'0400 0400	H'FFFF 78B0	32/16
Table setting register B12 in gamma correction block	GAM_B_LUT12	R/W	H'0400 0400	H'FFFF 78B4	32/16
Table setting register B13 in gamma correction block	GAM_B_LUT13	R/W	H'0400 0400	H'FFFF 78B8	32/16
Table setting register B14 in gamma correction block	GAM_B_LUT14	R/W	H'0400 0400	H'FFFF 78BC	32/16
Table setting register B15 in gamma correction block	GAM_B_LUT15	R/W	H'0400 0400	H'FFFF 78C0	32/16
Table setting register B16 in gamma correction block	GAM_B_LUT16	R/W	H'0400 0400	H'FFFF 78C4	32/16
Area setting register B1 in gamma correction block	GAM_B_AREA1	R/W	H'0008 1018	H'FFFF 78C8	32/16
Area setting register B2 in gamma correction block	GAM_B_AREA2	R/W	H'2028 3038	H'FFFF 78CC	32/16
Area setting register B3 in gamma correction block	GAM_B_AREA3	R/W	H'4048 5058	H'FFFF 78D0	32/16

chanhvinh.com

Register Name	Abbreviation	R/W	Initial Value	Address	Access Size
Area setting register B4 in gamma correction block	GAM_B_AREA4	R/W	H'6068 7078	H'FFFF 78D4	32/16
Area setting register B5 in gamma correction block	GAM_B_AREA5	R/W	H'8088 9098	H'FFFF 78D8	32/16
Area setting register B6 in gamma correction block	GAM_B_AREA6	R/W	H'A0A8 B0B8	H'FFFF 78DC	32/16
Area setting register B7 in gamma correction block	GAM_B_AREA7	R/W	H'C0C8 D0D8	H'FFFF 78E0	32/16
Area setting register B8 in gamma correction block	GAM_B_AREA8	R/W	H'E0E8 F0F8	H'FFFF 78E4	32/16
Register update control register R in gamma correction block	GAM_R_UPDATE	R/WC1	H'0000 0000	H'FFFF 7900	32/16
Table setting register R1 in gamma correction block	GAM_R_LUT1	R/W	H'0400 0400	H'FFFF 7908	32/16
Table setting register R2 in gamma correction block	GAM_R_LUT2	R/W	H'0400 0400	H'FFFF 790C	32/16
Table setting register R3 in gamma correction block	GAM_R_LUT3	R/W	H'0400 0400	H'FFFF 7910	32/16
Table setting register R4 in gamma correction block	GAM_R_LUT4	R/W	H'0400 0400	H'FFFF 7914	32/16
Table setting register R5 in gamma correction block	GAM_R_LUT5	R/W	H'0400 0400	H'FFFF 7918	32/16
Table setting register R6 in gamma correction block	GAM_R_LUT6	R/W	H'0400 0400	H'FFFF 791C	32/16
Table setting register R7 in gamma correction block	GAM_R_LUT7	R/W	H'0400 0400	H'FFFF 7920	32/16
Table setting register R8 in gamma correction block	GAM_R_LUT8	R/W	H'0400 0400	H'FFFF 7924	32/16
Table setting register R9 in gamma correction block	GAM_R_LUT9	R/W	H'0400 0400	H'FFFF 7928	32/16
Table setting register R10 in gamma correction block	GAM_R_LUT10	R/W	H'0400 0400	H'FFFF 792C	32/16
Table setting register R11 in gamma correction block	GAM_R_LUT11	R/W	H'0400 0400	H'FFFF 7930	32/16
Table setting register R12 in gamma correction block	GAM_R_LUT12	R/W	H'0400 0400	H'FFFF 7934	32/16

chanhvinh.com

Register Name	Abbreviation	R/W	Initial Value	Address	Access Size
Table setting register R13 in gamma correction block	GAM_R_LUT13	R/W	H'0400 0400	H'FFFF 7938	32/16
Table setting register R14 in gamma correction block	GAM_R_LUT14	R/W	H'0400 0400	H'FFFF 793C	32/16
Table setting register R15 in gamma correction block	GAM_R_LUT15	R/W	H'0400 0400	H'FFFF 7940	32/16
Table setting register R16 in gamma correction block	GAM_R_LUT16	R/W	H'0400 0400	H'FFFF 7944	32/16
Area setting register R1 in gamma correction block	GAM_R_AREA1	R/W	H'0008 1018	H'FFFF 7948	32/16
Area setting register R2 in gamma correction block	GAM_R_AREA2	R/W	H'2028 3038	H'FFFF 794C	32/16
Area setting register R3 in gamma correction block	GAM_R_AREA3	R/W	H'4048 5058	H'FFFF 7950	32/16
Area setting register R4 in gamma correction block	GAM_R_AREA4	R/W	H'6068 7078	H'FFFF 7954	32/16
Area setting register R5 in gamma correction block	GAM_R_AREA5	R/W	H'8088 9098	H'FFFF 7958	32/16
Area setting register R6 in gamma correction block	GAM_R_AREA6	R/W	H'A0A8 B0B8	H'FFFF 795C	32/16
Area setting register R7 in gamma correction block	GAM_R_AREA7	R/W	H'C0C8 D0D8	H'FFFF 7960	32/16
Area setting register R8 in gamma correction block	GAM_R_AREA8	R/W	H'E0E8 F0F8	H'FFFF 7964	32/16

chanhvinh.com

Table 36.24 TCON Block Register Configuration

Register Name	Abbreviation	R/W	Initial Value	Address	Access Size
TCON register update control register	TCON_UPDATE	R/WC1	H'0000 0000	H'FFFF 7980	32/16
TCON reference timing setting register	TCON_TIM	R/W	H'0190 0000	H'FFFF 7984	32/16
TCON vertical timing setting register A1	TCON_TIM_STVA1	R/W	H'0000 0004	H'FFFF 7988	32/16
TCON vertical timing setting register A2	TCON_TIM_STVA2	R/W	H'0000 0010	H'FFFF 798C	32/16
TCON vertical timing setting register B1	TCON_TIM_STVB1	R/W	H'0046 03C0	H'FFFF 7990	32/16
TCON vertical timing setting register B2	TCON_TIM_STVB2	R/W	H'0000 0001	H'FFFF 7994	32/16
TCON horizontal timing setting register STH1	TCON_TIM_STH1	R/W	H'0000 0060	H'FFFF 7998	32/16
TCON horizontal timing setting register STH2	TCON_TIM_STH2	R/W	H'0000 0012	H'FFFF 799C	32/16
TCON horizontal timing setting register STB1	TCON_TIM_STB1	R/W	H'0090 0280	H'FFFF 79A0	32/16
TCON horizontal timing setting register STB2	TCON_TIM_STB2	R/W	H'0000 0007	H'FFFF 79A4	32/16
TCON horizontal timing setting register CPV1	TCON_TIM_CPV1	R/W	H'0000 0000	H'FFFF 79A8	32/16
TCON horizontal timing setting register CPV2	TCON_TIM_CPV2	R/W	H'0000 0004	H'FFFF 79AC	32/16
TCON horizontal timing setting register POLA1	TCON_TIM_POLA1	R/W	H'0000 0000	H'FFFF 79B0	32/16
TCON horizontal timing setting register POLA2	TCON_TIM_POLA2	R/W	H'0000 1005	H'FFFF 79B4	32/16

chanhvinh.com

Register Name	Abbreviation	R/W	Initial Value	Address	Access Size
TCON horizontal timing setting register POLB1	TCON_TIM_POLB1	R/W	H'0000 0000	H'FFFF 79B8	32/16
TCON horizontal timing setting register POLB2	TCON_TIM_POLB2	R/W	H'0000 1006	H'FFFF 79BC	32/16
TCON data enable polarity setting register	TCON_TIM_DE	R/W	H'0000 0000	H'FFFF 79C0	32/16

Table 36.25 Output Controller Register Configuration

Register Name	Abbreviation	R/W	Initial Value	Address	Access Size
Register update control register in output controller	OUT_UPDATE	R/WC1	H'0000 0000	H'FFFF 7A00	32/16
Output interface register	OUT_SET	R/W	H'001F 0000	H'FFFF 7A04	32/16
Brightness (DC) correction register 1	OUT_BRIGHT1	R/W	H'0000 0200	H'FFFF 7A08	32/16
Brightness (DC) correction register 2	OUT_BRIGHT2	R/W	H'0200 0200	H'FFFF 7A0C	32/16
Contrast (gain) correction register	OUT_CONTRAST	R/W	H'0080 8080	H'FFFF 7A10	32/16
Panel dither register	OUT_PDTHA	R/W	H'0000 3021	H'FFFF 7A14	32/16
Output phase control register	OUT_CLK_PHASE	R/W	H'0000 0000	H'FFFF 7A24	32/16

chanhvinh.com

36.2.1 Register Update Control Register G in Gamma Correction Block (GAM_G_UPDATE)

Bit:	31	30	29	28	27	26	25	24	23	22	21	20	19	18	17	16
	—	—	—	—	—	—	—	—	—	—	—	—	—	—	—	—
Initial value:	0	0	0	0	0	0	0	0	0	0	0	0	0	0	0	0
R/W:	R	R	R	R	R	R	R	R	R	R	R	R	R	R	R	R

Bit:	15	14	13	12	11	10	9	8	7	6	5	4	3	2	1	0
	—	—	—	—	—	—	—	—	—	—	—	—	—	—	—	GAM_G_VEN
Initial value:	0	0	0	0	0	0	0	0	0	0	0	0	0	0	0	0
R/W:	R	R	R	R	R	R	R	R	R	R	R	R	R	R	R	R/WC1

Bit	Bit Name	Initial Value	R/W	Description
31 to 1	—	All 0	R	Reserved These bits are always read as 0. The write value should always be 0.
0	GAM_G_VEN	0	R/WC1	Gamma Correction (G) Register Update 0: Registers are not updated. 1: Registers are updated at the rising edge of the Vsync.

chanhvinh.com

36.2.2 Function Switch Register in Gamma Correction Block (GAM_SW)

Bit:	31	30	29	28	27	26	25	24	23	22	21	20	19	18	17	16
	—	—	—	—	—	—	—	—	—	—	—	—	—	—	—	—
Initial value:	0	0	0	0	0	0	0	0	0	0	0	0	0	0	0	0
R/W:	R	R	R	R	R	R	R	R	R	R	R	R	R	R	R	R

Bit:	15	14	13	12	11	10	9	8	7	6	5	4	3	2	1	0
	—	—	—	—	—	—	—	—	—	—	—	—	—	—	—	GAM_ON
Initial value:	0	0	0	0	0	0	0	0	0	0	0	0	0	0	0	0
R/W:	R	R	R	R	R	R	R	R	R	R	R	R	R	R	R	R/W

Bit	Bit Name	Initial Value	R/W	Description
31 to 1	—	All 0	R	Reserved These bits are always read as 0. The write value should always be 0.
0	GAM_ON	0	R/W	Gamma Correction On/Off Control 0: Off 1: On

Note: This register is updated when GAM_G_VEN in GAM_G_UPDATE is 1.

chanhvinh.com

36.2.3 Table Setting Register G1 to G16 in Gamma Correction Block (GAM_G_LUT1 to GAM_G_LUT16)

Bit:	31	30	29	28	27	26	25	24	23	22	21	20	19	18	17	16
	—	—	—	—	—	GAM_G_GAIN_xx[10:0]										
Initial value:	0	0	0	0	0	1	0	0	0	0	0	0	0	0	0	0
R/W:	R	R	R	R	R	R/W	R/W	R/W	R/W	R/W	R/W	R/W	R/W	R/W	R/W	R/W

Bit:	15	14	13	12	11	10	9	8	7	6	5	4	3	2	1	0
	—	—	—	—	—	GAM_G_GAIN_yy[10:0]										
Initial value:	0	0	0	0	0	1	0	0	0	0	0	0	0	0	0	0
R/W:	R	R	R	R	R	R/W	R/W	R/W	R/W	R/W	R/W	R/W	R/W	R/W	R/W	R/W

Bit	Bit Name	Initial Value	R/W	Description
31 to 27	—	All 0	R	Reserved These bits are always read as 0. The write value should always be 0.
26 to 16	*	1024	R/W	GAM_G_LUT1: Gain Adjustment of Area 0 of G Signal GAM_G_LUT2: Gain Adjustment of Area 2 of G Signal GAM_G_LUT3: Gain Adjustment of Area 4 of G Signal GAM_G_LUT4: Gain Adjustment of Area 6 of G Signal GAM_G_LUT5: Gain Adjustment of Area 8 of G Signal GAM_G_LUT6: Gain Adjustment of Area 10 of G Signal GAM_G_LUT7: Gain Adjustment of Area 12 of G Signal GAM_G_LUT8: Gain Adjustment of Area 14 of G Signal GAM_G_LUT9: Gain Adjustment of Area 16 of G Signal GAM_G_LUT10: Gain Adjustment of Area 18 of G Signal GAM_G_LUT11: Gain Adjustment of Area 20 of G Signal GAM_G_LUT12: Gain Adjustment of Area 22 of G Signal GAM_G_LUT13: Gain Adjustment of Area 24 of G Signal GAM_G_LUT14: Gain Adjustment of Area 26 of G Signal GAM_G_LUT15: Gain Adjustment of Area 28 of G Signal GAM_G_LUT16: Gain Adjustment of Area 30 of G Signal Unsigned (0 to 2047 [LSB], 1024 [LSB] = 1.0 [times])

chanhvinh.com

Bit	Bit Name	Initial Value	R/W	Description
26 to 16	*	1024	R/W	*: Bit Name GAM_G_LUT1: GAM_G_GAIN_00[10:0] GAM_G_LUT2: GAM_G_GAIN_02[10:0] GAM_G_LUT3: GAM_G_GAIN_04[10:0] GAM_G_LUT4: GAM_G_GAIN_06[10:0] GAM_G_LUT5: GAM_G_GAIN_08[10:0] GAM_G_LUT6: GAM_G_GAIN_10[10:0] GAM_G_LUT7: GAM_G_GAIN_12[10:0] GAM_G_LUT8: GAM_G_GAIN_14[10:0] GAM_G_LUT9: GAM_G_GAIN_16[10:0] GAM_G_LUT10: GAM_G_GAIN_18[10:0] GAM_G_LUT11: GAM_G_GAIN_20[10:0] GAM_G_LUT12: GAM_G_GAIN_22[10:0] GAM_G_LUT13: GAM_G_GAIN_24[10:0] GAM_G_LUT14: GAM_G_GAIN_26[10:0] GAM_G_LUT15: GAM_G_GAIN_28[10:0] GAM_G_LUT16: GAM_G_GAIN_30[10:0]
15 to 11	—	All 0	R	Reserved These bits are always read as 0. The write value should always be 0.
10 to 0	*	1024	R/W	GAM_G_LUT1: Gain Adjustment of Area 1 of G Signal GAM_G_LUT2: Gain Adjustment of Area 3 of G Signal GAM_G_LUT3: Gain Adjustment of Area 5 of G Signal GAM_G_LUT4: Gain Adjustment of Area 7 of G Signal GAM_G_LUT5: Gain Adjustment of Area 9 of G Signal GAM_G_LUT6: Gain Adjustment of Area 11 of G Signal GAM_G_LUT7: Gain Adjustment of Area 13 of G Signal GAM_G_LUT8: Gain Adjustment of Area 15 of G Signal GAM_G_LUT9: Gain Adjustment of Area 17 of G Signal GAM_G_LUT10: Gain Adjustment of Area 19 of G Signal

chanhvinh.com

Bit	Bit Name	Initial Value	R/W	Description
10 to 0	*	1024	R/W	GAM_G_LUT11: Gain Adjustment of Area 21 of G Signal GAM_G_LUT12: Gain Adjustment of Area 23 of G Signal GAM_G_LUT13: Gain Adjustment of Area 25 of G Signal GAM_G_LUT14: Gain Adjustment of Area 27 of G Signal GAM_G_LUT15: Gain Adjustment of Area 29 of G Signal GAM_G_LUT16: Gain Adjustment of Area 31 of G Signal Unsigned (0 to 2047 [LSB], 1024 [LSB] = 1.0 [times]) *: Bit Name GAM_G_LUT1: GAM_G_GAIN_01[10:0] GAM_G_LUT2: GAM_G_GAIN_03[10:0] GAM_G_LUT3: GAM_G_GAIN_05[10:0] GAM_G_LUT4: GAM_G_GAIN_07[10:0] GAM_G_LUT5: GAM_G_GAIN_09[10:0] GAM_G_LUT6: GAM_G_GAIN_11[10:0] GAM_G_LUT7: GAM_G_GAIN_13[10:0] GAM_G_LUT8: GAM_G_GAIN_15[10:0] GAM_G_LUT9: GAM_G_GAIN_17[10:0] GAM_G_LUT10: GAM_G_GAIN_19[10:0] GAM_G_LUT11: GAM_G_GAIN_21[10:0] GAM_G_LUT12: GAM_G_GAIN_23[10:0] GAM_G_LUT13: GAM_G_GAIN_25[10:0] GAM_G_LUT14: GAM_G_GAIN_27[10:0] GAM_G_LUT15: GAM_G_GAIN_29[10:0] GAM_G_LUT16: GAM_G_GAIN_31[10:0]

Note: This register is updated when GAM_G_VEN in GAM_G_UPDATE is 1.

chanhvinh.com

36.2.4 Area Setting Register G1 in Gamma Correction Block (GAM_G_AREA1)

Bit:	31	30	29	28	27	26	25	24	23	22	21	20	19	18	17	16
	—	—	—	—	—	—	—	—	GAM_G_TH_01[7:0]							
Initial value:	0	0	0	0	0	0	0	0	0	0	0	0	1	0	0	0
R/W:	R	R	R	R	R	R	R	R	R/W	R/W	R/W	R/W	R/W	R/W	R/W	R/W

Bit:	15	14	13	12	11	10	9	8	7	6	5	4	3	2	1	0
	GAM_G_TH_02[7:0]								GAM_G_TH_03[7:0]							
Initial value:	0	0	0	1	0	0	0	0	0	0	0	1	1	0	0	0
R/W:	R/W	R/W	R/W	R/W	R/W	R/W	R/W	R/W	R/W	R/W	R/W	R/W	R/W	R/W	R/W	R/W

Bit	Bit Name	Initial Value	R/W	Description
31 to 24	—	All 0	R	Reserved These bits are always read as 0. The write value should always be 0.
23 to 16	GAM_G_TH_01 [7:0]	8	R/W	Start Threshold of Area 1 of G Signal Unsigned (0 to 255 [LSB]) 0 ≤ Threshold of current area < Threshold of next area
15 to 8	GAM_G_TH_02 [7:0]	16	R/W	Start Threshold of Area 2 of G Signal Unsigned (0 to 255 [LSB]) Threshold of previous area ≤ Threshold of current area < Threshold of next area
7 to 0	GAM_G_TH_03 [7:0]	24	R/W	Start Threshold of Area 3 of G Signal Unsigned (0 to 255 [LSB]) Threshold of previous area ≤ Threshold of current area < Threshold of next area d

Note: This register is updated when GAM_G_VEN in GAM_G_UPDATE is 1.

chanhvinh.com

36.2.5 Area Setting Register G2 in Gamma Correction Block (GAM_G_AREA2)

Bit:	31	30	29	28	27	26	25	24	23	22	21	20	19	18	17	16
	GAM_G_TH_04[7:0]								GAM_G_TH_05[7:0]							
Initial value:	0	0	1	0	0	0	0	0	0	0	1	0	1	0	0	0
R/W:	R/W	R/W	R/W	R/W	R/W	R/W	R/W	R/W	R/W	R/W	R/W	R/W	R/W	R/W	R/W	R/W

Bit:	15	14	13	12	11	10	9	8	7	6	5	4	3	2	1	0
	GAM_G_TH_06[7:0]								GAM_G_TH_07[7:0]							
Initial value:	0	0	1	1	0	0	0	0	0	0	1	1	1	0	0	0
R/W:	R/W	R/W	R/W	R/W	R/W	R/W	R/W	R/W	R/W	R/W	R/W	R/W	R/W	R/W	R/W	R/W

Bit	Bit Name	Initial Value	R/W	Description
31 to 24	GAM_G_TH_04[7:0]	32	R/W	Start Threshold of Area 4 of G Signal Unsigned (0 to 255 [LSB]) Threshold of previous area ≤ Threshold of current area < Threshold of next area
23 to 16	GAM_G_TH_05[7:0]	40	R/W	Start Threshold of Area 5 of G Signal Unsigned (0 to 255 [LSB]) Threshold of previous area ≤ Threshold of current area < Threshold of next area
15 to 8	GAM_G_TH_06[7:0]	48	R/W	Start Threshold of Area 6 of G Signal Unsigned (0 to 255 [LSB]) Threshold of previous area ≤ Threshold of current area < Threshold of next area
7 to 0	GAM_G_TH_07[7:0]	56	R/W	Start Threshold of Area 7 of G Signal Unsigned (0 to 255 [LSB]) Threshold of previous area ≤ Threshold of current area < Threshold of next area d

Note: This register is updated when GAM_G_VEN in GAM_G_UPDATE is 1.

chanhvinh.com

36.2.6 Area Setting Register G3 in Gamma Correction Block (GAM_G_AREA3)

Bit:	31	30	29	28	27	26	25	24	23	22	21	20	19	18	17	16
	GAM_G_TH_08[7:0]								GAM_G_TH_09[7:0]							
Initial value:	0	1	0	0	0	0	0	0	0	1	0	0	1	0	0	0
R/W:	R/W	R/W	R/W	R/W	R/W	R/W	R/W	R/W	R/W	R/W	R/W	R/W	R/W	R/W	R/W	R/W

Bit:	15	14	13	12	11	10	9	8	7	6	5	4	3	2	1	0
	GAM_G_TH_10[7:0]								GAM_G_TH_11[7:0]							
Initial value:	0	1	0	1	0	0	0	0	0	1	0	1	1	0	0	0
R/W:	R/W	R/W	R/W	R/W	R/W	R/W	R/W	R/W	R/W	R/W	R/W	R/W	R/W	R/W	R/W	R/W

Bit	Bit Name	Initial Value	R/W	Description
31 to 24	GAM_G_TH_08[7:0]	64	R/W	Start Threshold of Area 8 of G Signal Unsigned (0 to 255 [LSB]) Threshold of previous area ≤ Threshold of current area < Threshold of next area
23 to 16	GAM_G_TH_09[7:0]	72	R/W	Start Threshold of Area 9 of G Signal Unsigned (0 to 255 [LSB]) Threshold of previous area ≤ Threshold of current area < Threshold of next area
15 to 8	GAM_G_TH_10[7:0]	80	R/W	Start Threshold of Area 10 of G Signal Unsigned (0 to 255 [LSB]) Threshold of previous area ≤ Threshold of current area < Threshold of next area
7 to 0	GAM_G_TH_11[7:0]	88	R/W	Start Threshold of Area 11 of G Signal Unsigned (0 to 255 [LSB]) Threshold of previous area ≤ Threshold of current area < Threshold of next area

Note: This register is updated when GAM_G_VEN in GAM_G_UPDATE is 1.

chanhvinh.com

36.2.7 Area Setting Register G4 in Gamma Correction Block (GAM_G_AREA4)

Bit:	31	30	29	28	27	26	25	24	23	22	21	20	19	18	17	16
	GAM_G_TH_12[7:0]								GAM_G_TH_13[7:0]							
Initial value:	0	1	1	0	0	0	0	0	0	1	1	0	1	0	0	0
R/W:	R/W	R/W	R/W	R/W	R/W	R/W	R/W	R/W	R/W	R/W	R/W	R/W	R/W	R/W	R/W	R/W

Bit:	15	14	13	12	11	10	9	8	7	6	5	4	3	2	1	0
	GAM_G_TH_14[7:0]								GAM_G_TH_15[7:0]							
Initial value:	0	1	1	1	0	0	0	0	0	1	1	1	1	0	0	0
R/W:	R/W	R/W	R/W	R/W	R/W	R/W	R/W	R/W	R/W	R/W	R/W	R/W	R/W	R/W	R/W	R/W

Bit	Bit Name	Initial Value	R/W	Description
31 to 24	GAM_G_TH_12[7:0]	96	R/W	Start Threshold of Area 12 of G Signal Unsigned (0 to 255 [LSB]) Threshold of previous area ≤ Threshold of current area < Threshold of next area
23 to 16	GAM_G_TH_13[7:0]	104	R/W	Start Threshold of Area 13 of G Signal Unsigned (0 to 255 [LSB]) Threshold of previous area ≤ Threshold of current area < Threshold of next area
15 to 8	GAM_G_TH_14[7:0]	112	R/W	Start Threshold of Area 14 of G Signal Unsigned (0 to 255 [LSB]) Threshold of previous area ≤ Threshold of current area < Threshold of next area
7 to 0	GAM_G_TH_15[7:0]	120	R/W	Start Threshold of Area 15 of G Signal Unsigned (0 to 255 [LSB]) Threshold of previous area ≤ Threshold of current area < Threshold of next area

Note: This register is updated when GAM_G_VEN in GAM_G_UPDATE is 1.

chanhvinh.com

36.2.8 Area Setting Register G5 in Gamma Correction Block (GAM_G_AREA5)

Bit:	31	30	29	28	27	26	25	24	23	22	21	20	19	18	17	16
	GAM_G_TH_16[7:0]								GAM_G_TH_17[7:0]							
Initial value:	1	0	0	0	0	0	0	0	1	0	0	0	1	0	0	0
R/W:	R/W	R/W	R/W	R/W	R/W	R/W	R/W	R/W	R/W	R/W	R/W	R/W	R/W	R/W	R/W	R/W

Bit:	15	14	13	12	11	10	9	8	7	6	5	4	3	2	1	0
	GAM_G_TH_18[7:0]								GAM_G_TH_19[7:0]							
Initial value:	1	0	0	1	0	0	0	0	1	0	0	1	1	0	0	0
R/W:	R/W	R/W	R/W	R/W	R/W	R/W	R/W	R/W	R/W	R/W	R/W	R/W	R/W	R/W	R/W	R/W

Bit	Bit Name	Initial Value	R/W	Description
31 to 24	GAM_G_TH_16[7:0]	128	R/W	Start Threshold of Area 16 of G Signal Unsigned (0 to 255 [LSB]) Threshold of previous area ≤ Threshold of current area < Threshold of next area
23 to 16	GAM_G_TH_17[7:0]	136	R/W	Start Threshold of Area 17 of G Signal Unsigned (0 to 255 [LSB]) Threshold of previous area ≤ Threshold of current area < Threshold of next area
15 to 8	GAM_G_TH_18[7:0]	144	R/W	Start Threshold of Area 18 of G Signal Unsigned (0 to 255 [LSB]) Threshold of previous area ≤ Threshold of current area < Threshold of next area
7 to 0	GAM_G_TH_19[7:0]	152	R/W	Start Threshold of Area 19 of G Signal Unsigned (0 to 255 [LSB]) Threshold of previous area ≤ Threshold of current area < Threshold of next area

Note: This register is updated when GAM_G_VEN in GAM_G_UPDATE is 1.

chanhvinh.com

36.2.9 Area Setting Register G6 in Gamma Correction Block (GAM_G_AREA6)

Bit:	31	30	29	28	27	26	25	24	23	22	21	20	19	18	17	16
	GAM_G_TH_20[7:0]								GAM_G_TH_21[7:0]							
Initial value:	1	0	1	0	0	0	0	0	1	0	1	0	1	0	0	0
R/W:	R/W	R/W	R/W	R/W	R/W	R/W	R/W	R/W	R/W	R/W	R/W	R/W	R/W	R/W	R/W	R/W

Bit:	15	14	13	12	11	10	9	8	7	6	5	4	3	2	1	0
	GAM_G_TH_22[7:0]								GAM_G_TH_23[7:0]							
Initial value:	1	0	1	1	0	0	0	0	1	0	1	1	1	0	0	0
R/W:	R/W	R/W	R/W	R/W	R/W	R/W	R/W	R/W	R/W	R/W	R/W	R/W	R/W	R/W	R/W	R/W

Bit	Bit Name	Initial Value	R/W	Description
31 to 24	GAM_G_TH_20[7:0]	160	R/W	Start Threshold of Area 20 of G Signal Unsigned (0 to 255 [LSB]) Threshold of previous area ≤ Threshold of current area < Threshold of next area
23 to 16	GAM_G_TH_21[7:0]	168	R/W	Start Threshold of Area 21 of G Signal Unsigned (0 to 255 [LSB]) Threshold of previous area ≤ Threshold of current area < Threshold of next area
15 to 8	GAM_G_TH_22[7:0]	176	R/W	Start Threshold of Area 22 of G Signal Unsigned (0 to 255 [LSB]) Threshold of previous area ≤ Threshold of current area < Threshold of next area
7 to 0	GAM_G_TH_23[7:0]	184	R/W	Start Threshold of Area 23 of G Signal Unsigned (0 to 255 [LSB]) Threshold of previous area ≤ Threshold of current area < Threshold of next area

Note: This register is updated when GAM_G_VEN in GAM_G_UPDATE is 1.

chanhvinh.com

36.2.10 Area Setting Register G7 in Gamma Correction Block (GAM_G_AREA7)

Bit:	31	30	29	28	27	26	25	24	23	22	21	20	19	18	17	16
	GAM_G_TH_24[7:0]								GAM_G_TH_25[7:0]							
Initial value:	1	1	0	0	0	0	0	0	1	1	0	0	1	0	0	0
R/W:	R/W	R/W	R/W	R/W	R/W	R/W	R/W	R/W	R/W	R/W	R/W	R/W	R/W	R/W	R/W	R/W

Bit:	15	14	13	12	11	10	9	8	7	6	5	4	3	2	1	0
	GAM_G_TH_26[7:0]								GAM_G_TH_27[7:0]							
Initial value:	1	1	0	1	0	0	0	0	1	1	0	1	1	0	0	0
R/W:	R/W	R/W	R/W	R/W	R/W	R/W	R/W	R/W	R/W	R/W	R/W	R/W	R/W	R/W	R/W	R/W

Bit	Bit Name	Initial Value	R/W	Description
31 to 24	GAM_G_TH_24[7:0]	192	R/W	Start Threshold of Area 24 of G Signal Unsigned (0 to 255 [LSB]) Threshold of previous area ≤ Threshold of current area < Threshold of next area
23 to 16	GAM_G_TH_25[7:0]	200	R/W	Start Threshold of Area 25 of G Signal Unsigned (0 to 255 [LSB]) Threshold of previous area ≤ Threshold of current area < Threshold of next area
15 to 8	GAM_G_TH_26[7:0]	208	R/W	Start Threshold of Area 26 of G Signal Unsigned (0 to 255 [LSB]) Threshold of previous area ≤ Threshold of current area < Threshold of next area
7 to 0	GAM_G_TH_27[7:0]	216	R/W	Start Threshold of Area 27 of G Signal Unsigned (0 to 255 [LSB]) Threshold of previous area ≤ Threshold of current area < Threshold of next area

Note: This register is updated when GAM_G_VEN in GAM_G_UPDATE is 1.

chanhvinh.com

36.2.11 Area Setting Register G8 in Gamma Correction Block (GAM_G_AREA8)

Bit:	31	30	29	28	27	26	25	24	23	22	21	20	19	18	17	16
	GAM_G_TH_28[7:0]								GAM_G_TH_29[7:0]							
Initial value:	1	1	1	0	0	0	0	0	1	1	1	0	1	0	0	0
R/W:	R/W	R/W	R/W	R/W	R/W	R/W	R/W	R/W	R/W	R/W	R/W	R/W	R/W	R/W	R/W	R/W

Bit:	15	14	13	12	11	10	9	8	7	6	5	4	3	2	1	0
	GAM_G_TH_30[7:0]								GAM_G_TH_31[7:0]							
Initial value:	1	1	1	1	0	0	0	0	1	1	1	1	1	0	0	0
R/W:	R/W	R/W	R/W	R/W	R/W	R/W	R/W	R/W	R/W	R/W	R/W	R/W	R/W	R/W	R/W	R/W

Bit	Bit Name	Initial Value	R/W	Description
31 to 24	GAM_G_TH_28[7:0]	224	R/W	Start Threshold of Area 28 of G Signal Unsigned (0 to 255 [LSB]) Threshold of previous area ≤ Threshold of current area < Threshold of next area
23 to 16	GAM_G_TH_29[7:0]	232	R/W	Start Threshold of Area 29 of G Signal Unsigned (0 to 255 [LSB]) Threshold of previous area ≤ Threshold of current area < Threshold of next area
15 to 8	GAM_G_TH_30[7:0]	240	R/W	Start Threshold of Area 30 of G Signal Unsigned (0 to 255 [LSB]) Threshold of previous area ≤ Threshold of current area < Threshold of next area
7 to 0	GAM_G_TH_31[7:0]	248	R/W	Start Threshold of Area 31 of G Signal Unsigned (0 to 255 [LSB]) Threshold of previous area ≤ Threshold of current area < Threshold of next area

Note: This register is updated when GAM_G_VEN in GAM_G_UPDATE is 1.

chanhvinh.com

36.2.12 Register Update Control Register B in Gamma Correction Block (GAM_B_UPDATE)

Bit:	31	30	29	28	27	26	25	24	23	22	21	20	19	18	17	16
	—	—	—	—	—	—	—	—	—	—	—	—	—	—	—	—
Initial value:	0	0	0	0	0	0	0	0	0	0	0	0	0	0	0	0
R/W:	R	R	R	R	R	R	R	R	R	R	R	R	R	R	R	R

Bit:	15	14	13	12	11	10	9	8	7	6	5	4	3	2	1	0
	—	—	—	—	—	—	—	—	—	—	—	—	—	—	—	GAM_B_VEN
Initial value:	0	0	0	0	0	0	0	0	0	0	0	0	0	0	0	0
R/W:	R	R	R	R	R	R	R	R	R	R	R	R	R	R	R	R/WC1

Bit	Bit Name	Initial Value	R/W	Description
31 to 1	—	All 0	R	Reserved These bits are always read as 0. The write value should always be 0.
0	GAM_B_VEN	0	R/WC1	Gamma Correction (B) Register Update 0: Registers are not updated. 1: Registers are updated at the rising edge of the Vsync.

chanhvinh.com

36.2.13 Table Setting Register B1 to B16 in Gamma Correction Block (GAM_B_LUT1 to GAM_B_LUT16)

Bit:	31	30	29	28	27	26	25	24	23	22	21	20	19	18	17	16
	—	—	—	—	—	GAM_B_GAIN_xx[10:0]										
Initial value:	0	0	0	0	0	1	0	0	0	0	0	0	0	0	0	0
R/W:	R	R	R	R	R	R/W	R/W	R/W	R/W	R/W	R/W	R/W	R/W	R/W	R/W	R/W

Bit:	15	14	13	12	11	10	9	8	7	6	5	4	3	2	1	0
	—	—	—	—	—	GAM_B_GAIN_yy[10:0]										
Initial value:	0	0	0	0	0	1	0	0	0	0	0	0	0	0	0	0
R/W:	R	R	R	R	R	R/W	R/W	R/W	R/W	R/W	R/W	R/W	R/W	R/W	R/W	R/W

Bit	Bit Name	Initial Value	R/W	Description
31 to 27	—	All 0	R	Reserved These bits are always read as 0. The write value should always be 0.
26 to 16	*	1024	R/W	GAM_B_LUT1: Gain Adjustment of Area 0 of B Signal GAM_B_LUT2: Gain Adjustment of Area 2 of B Signal GAM_B_LUT3: Gain Adjustment of Area 4 of B Signal GAM_B_LUT4: Gain Adjustment of Area 6 of B Signal GAM_B_LUT5: Gain Adjustment of Area 8 of B Signal GAM_B_LUT6: Gain Adjustment of Area 10 of B Signal GAM_B_LUT7: Gain Adjustment of Area 12 of B Signal GAM_B_LUT8: Gain Adjustment of Area 14 of B Signal GAM_B_LUT9: Gain Adjustment of Area 16 of B Signal GAM_B_LUT10: Gain Adjustment of Area 18 of B Signal GAM_B_LUT11: Gain Adjustment of Area 20 of B Signal GAM_B_LUT12: Gain Adjustment of Area 22 of B Signal GAM_B_LUT13: Gain Adjustment of Area 24 of B Signal GAM_B_LUT14: Gain Adjustment of Area 26 of B Signal GAM_B_LUT15: Gain Adjustment of Area 28 of B Signal GAM_B_LUT16: Gain Adjustment of Area 30 of B Signal Unsigned (0 to 2047 [LSB], 1024 [LSB] = 1.0 [times])

chanhvinh.com

Bit	Bit Name	Initial Value	R/W	Description
26 to 16	*	1024	R/W	*: Bit Name GAM_B_LUT1: GAM_B_GAIN_00[10:0] GAM_B_LUT2: GAM_B_GAIN_02[10:0] GAM_B_LUT3: GAM_B_GAIN_04[10:0] GAM_B_LUT4: GAM_B_GAIN_06[10:0] GAM_B_LUT5: GAM_B_GAIN_08[10:0] GAM_B_LUT6: GAM_B_GAIN_10[10:0] GAM_B_LUT7: GAM_B_GAIN_12[10:0] GAM_B_LUT8: GAM_B_GAIN_14[10:0] GAM_B_LUT9: GAM_B_GAIN_16[10:0] GAM_B_LUT10: GAM_B_GAIN_18[10:0] GAM_B_LUT11: GAM_B_GAIN_20[10:0] GAM_B_LUT12: GAM_B_GAIN_22[10:0] GAM_B_LUT13: GAM_B_GAIN_24[10:0] GAM_B_LUT14: GAM_B_GAIN_26[10:0] GAM_B_LUT15: GAM_B_GAIN_28[10:0] GAM_B_LUT16: GAM_B_GAIN_30[10:0]
15 to 11	—	All 0	R	Reserved These bits are always read as 0. The write value should always be 0.
10 to 0	*	1024	R/W	GAM_B_LUT1: Gain Adjustment of Area 1 of B Signal GAM_B_LUT2: Gain Adjustment of Area 3 of B Signal GAM_B_LUT3: Gain Adjustment of Area 5 of B Signal GAM_B_LUT4: Gain Adjustment of Area 7 of B Signal GAM_B_LUT5: Gain Adjustment of Area 9 of B Signal GAM_B_LUT6: Gain Adjustment of Area 11 of B Signal GAM_B_LUT7: Gain Adjustment of Area 13 of B Signal GAM_B_LUT8: Gain Adjustment of Area 15 of B Signal GAM_B_LUT9: Gain Adjustment of Area 17 of B Signal GAM_B_LUT10: Gain Adjustment of Area 19 of B Signal

chanhvinh.com

Bit	Bit Name	Initial Value	R/W	Description
10 to 0	*	1024	R/W	GAM_B_LUT11: Gain Adjustment of Area 21 of B Signal GAM_B_LUT12: Gain Adjustment of Area 23 of B Signal GAM_B_LUT13: Gain Adjustment of Area 25 of B Signal GAM_B_LUT14: Gain Adjustment of Area 27 of B Signal GAM_B_LUT15: Gain Adjustment of Area 29 of B Signal GAM_B_LUT16: Gain Adjustment of Area 31 of B Signal Unsigned (0 to 2047 [LSB], 1024 [LSB] = 1.0 [times]) *: Bit Name GAM_B_LUT1: GAM_B_GAIN_01[10:0] GAM_B_LUT2: GAM_B_GAIN_03[10:0] GAM_B_LUT3: GAM_B_GAIN_05[10:0] GAM_B_LUT4: GAM_B_GAIN_07[10:0] GAM_B_LUT5: GAM_B_GAIN_09[10:0] GAM_B_LUT6: GAM_B_GAIN_11[10:0] GAM_B_LUT7: GAM_B_GAIN_13[10:0] GAM_B_LUT8: GAM_B_GAIN_15[10:0] GAM_B_LUT9: GAM_B_GAIN_17[10:0] GAM_B_LUT10: GAM_B_GAIN_19[10:0] GAM_B_LUT11: GAM_B_GAIN_21[10:0] GAM_B_LUT12: GAM_B_GAIN_23[10:0] GAM_B_LUT13: GAM_B_GAIN_25[10:0] GAM_B_LUT14: GAM_B_GAIN_27[10:0] GAM_B_LUT15: GAM_B_GAIN_29[10:0] GAM_B_LUT16: GAM_B_GAIN_31[10:0]

Note: This register is updated when GAM_B_VEN in GAM_B_UPDATE is 1.

chanhvinh.com

36.2.14 Area Setting Register B1 in Gamma Correction Block (GAM_B_AREA1)

Bit:	31	30	29	28	27	26	25	24	23	22	21	20	19	18	17	16
	—	—	—	—	—	—	—	—	GAM_B_TH_01[7:0]							
Initial value:	0	0	0	0	0	0	0	0	0	0	0	0	1	0	0	0
R/W:	R	R	R	R	R	R	R	R	R/W	R/W	R/W	R/W	R/W	R/W	R/W	R/W

Bit:	15	14	13	12	11	10	9	8	7	6	5	4	3	2	1	0
	GAM_B_TH_02[7:0]								GAM_B_TH_03[7:0]							
Initial value:	0	0	0	1	0	0	0	0	0	0	0	1	1	0	0	0
R/W:	R/W	R/W	R/W	R/W	R/W	R/W	R/W	R/W	R/W	R/W	R/W	R/W	R/W	R/W	R/W	R/W

Bit	Bit Name	Initial Value	R/W	Description
31 to 24	—	All 0	R	Reserved These bits are always read as 0. The write value should always be 0.
23 to 16	GAM_B_TH_01 [7:0]	8	R/W	Start Threshold of Area 1 of B Signal Unsigned (0 to 255 [LSB]) 0 ≤ Threshold of current area < Threshold of next area
15 to 8	GAM_B_TH_02 [7:0]	16	R/W	Start Threshold of Area 2 of B Signal Unsigned (0 to 255 [LSB]) Threshold of previous area ≤ Threshold of current area < Threshold of next area
7 to 0	GAM_B_TH_03 [7:0]	24	R/W	Start Threshold of Area 3 of B Signal Unsigned (0 to 255 [LSB]) Threshold of previous area ≤ Threshold of current area < Threshold of next area d

Note: This register is updated when GAM_B_VEN in GAM_B_UPDATE is 1.

chanhvinh.com

36.2.15 Area Setting Register B2 in Gamma Correction Block (GAM_B_AREA2)

Bit:	31	30	29	28	27	26	25	24	23	22	21	20	19	18	17	16
	GAM_B_TH_04[7:0]								GAM_B_TH_05[7:0]							
Initial value:	0	0	1	0	0	0	0	0	0	0	1	0	1	0	0	0
R/W:	R/W	R/W	R/W	R/W	R/W	R/W	R/W	R/W	R/W	R/W	R/W	R/W	R/W	R/W	R/W	R/W

Bit:	15	14	13	12	11	10	9	8	7	6	5	4	3	2	1	0
	GAM_B_TH_06[7:0]								GAM_B_TH_07[7:0]							
Initial value:	0	0	1	1	0	0	0	0	0	0	1	1	1	0	0	0
R/W:	R/W	R/W	R/W	R/W	R/W	R/W	R/W	R/W	R/W	R/W	R/W	R/W	R/W	R/W	R/W	R/W

Bit	Bit Name	Initial Value	R/W	Description
31 to 24	GAM_B_TH_04 [7:0]	32	R/W	Start Threshold of Area 4 of B Signal Unsigned (0 to 255 [LSB]) Threshold of previous area ≤ Threshold of current area < Threshold of next area
23 to 16	GAM_B_TH_05 [7:0]	40	R/W	Start Threshold of Area 5 of B Signal Unsigned (0 to 255 [LSB]) Threshold of previous area ≤ Threshold of current area < Threshold of next area
15 to 8	GAM_B_TH_06 [7:0]	48	R/W	Start Threshold of Area 6 of B Signal Unsigned (0 to 255 [LSB]) Threshold of previous area ≤ Threshold of current area < Threshold of next area
7 to 0	GAM_B_TH_07 [7:0]	56	R/W	Start Threshold of Area 7 of B Signal Unsigned (0 to 255 [LSB]) Threshold of previous area ≤ Threshold of current area < Threshold of next area d

Note: This register is updated when GAM_B_VEN in GAM_B_UPDATE is 1.

chanhvinh.com

36.2.16 Area Setting Register B3 in Gamma Correction Block (GAM_B_AREA3)

Bit:	31	30	29	28	27	26	25	24	23	22	21	20	19	18	17	16
	GAM_B_TH_08[7:0]								GAM_B_TH_09[7:0]							
Initial value:	0	1	0	0	0	0	0	0	0	1	0	0	1	0	0	0
R/W:	R/W	R/W	R/W	R/W	R/W	R/W	R/W	R/W	R/W	R/W	R/W	R/W	R/W	R/W	R/W	R/W

Bit:	15	14	13	12	11	10	9	8	7	6	5	4	3	2	1	0
	GAM_B_TH_10[7:0]								GAM_B_TH_11[7:0]							
Initial value:	0	1	0	1	0	0	0	0	0	1	0	1	1	0	0	0
R/W:	R/W	R/W	R/W	R/W	R/W	R/W	R/W	R/W	R/W	R/W	R/W	R/W	R/W	R/W	R/W	R/W

Bit	Bit Name	Initial Value	R/W	Description
31 to 24	GAM_B_TH_08 [7:0]	64	R/W	Start Threshold of Area 8 of B Signal Unsigned (0 to 255 [LSB]) Threshold of previous area ≤ Threshold of current area < Threshold of next area
23 to 16	GAM_B_TH_09 [7:0]	72	R/W	Start Threshold of Area 9 of B Signal Unsigned (0 to 255 [LSB]) Threshold of previous area ≤ Threshold of current area < Threshold of next area
15 to 8	GAM_B_TH_10 [7:0]	80	R/W	Start Threshold of Area 10 of B Signal Unsigned (0 to 255 [LSB]) Threshold of previous area ≤ Threshold of current area < Threshold of next area
7 to 0	GAM_B_TH_11 [7:0]	88	R/W	Start Threshold of Area 11 of B Signal Unsigned (0 to 255 [LSB]) Threshold of previous area ≤ Threshold of current area < Threshold of next area

Note: This register is updated when GAM_B_VEN in GAM_B_UPDATE is 1.

chanhvinh.com

36.2.17 Area Setting Register B4 in Gamma Correction Block (GAM_B_AREA4)

Bit:	31	30	29	28	27	26	25	24	23	22	21	20	19	18	17	16
	GAM_B_TH_12[7:0]								GAM_B_TH_13[7:0]							
Initial value:	0	1	1	0	0	0	0	0	0	1	1	0	1	0	0	0
R/W:	R/W	R/W	R/W	R/W	R/W	R/W	R/W	R/W	R/W	R/W	R/W	R/W	R/W	R/W	R/W	R/W

Bit:	15	14	13	12	11	10	9	8	7	6	5	4	3	2	1	0
	GAM_B_TH_14[7:0]								GAM_B_TH_15[7:0]							
Initial value:	0	1	1	1	0	0	0	0	0	1	1	1	1	0	0	0
R/W:	R/W	R/W	R/W	R/W	R/W	R/W	R/W	R/W	R/W	R/W	R/W	R/W	R/W	R/W	R/W	R/W

Bit	Bit Name	Initial Value	R/W	Description
31 to 24	GAM_B_TH_12 [7:0]	96	R/W	Start Threshold of Area 12 of B Signal Unsigned (0 to 255 [LSB]) Threshold of previous area ≤ Threshold of current area < Threshold of next area
23 to 16	GAM_B_TH_13 [7:0]	104	R/W	Start Threshold of Area 13 of B Signal Unsigned (0 to 255 [LSB]) Threshold of previous area ≤ Threshold of current area < Threshold of next area
15 to 8	GAM_B_TH_14 [7:0]	112	R/W	Start Threshold of Area 14 of B Signal Unsigned (0 to 255 [LSB]) Threshold of previous area ≤ Threshold of current area < Threshold of next area
7 to 0	GAM_B_TH_15 [7:0]	120	R/W	Start Threshold of Area 15 of B Signal Unsigned (0 to 255 [LSB]) Threshold of previous area ≤ Threshold of current area < Threshold of next area

Note: This register is updated when GAM_B_VEN in GAM_B_UPDATE is 1.

chanhvinh.com

36.2.18 Area Setting Register B5 in Gamma Correction Block (GAM_B_AREA5)

Bit:	31	30	29	28	27	26	25	24	23	22	21	20	19	18	17	16
	GAM_B_TH_16[7:0]								GAM_B_TH_17[7:0]							
Initial value:	1	0	0	0	0	0	0	0	1	0	0	0	1	0	0	0
R/W:	R/W	R/W	R/W	R/W	R/W	R/W	R/W	R/W	R/W	R/W	R/W	R/W	R/W	R/W	R/W	R/W

Bit:	15	14	13	12	11	10	9	8	7	6	5	4	3	2	1	0
	GAM_B_TH_18[7:0]								GAM_B_TH_19[7:0]							
Initial value:	1	0	0	1	0	0	0	0	1	0	0	1	1	0	0	0
R/W:	R/W	R/W	R/W	R/W	R/W	R/W	R/W	R/W	R/W	R/W	R/W	R/W	R/W	R/W	R/W	R/W

Bit	Bit Name	Initial Value	R/W	Description
31 to 24	GAM_B_TH_16 [7:0]	128	R/W	Start Threshold of Area 16 of B Signal Unsigned (0 to 255 [LSB]) Threshold of previous area ≤ Threshold of current area < Threshold of next area
23 to 16	GAM_B_TH_17 [7:0]	136	R/W	Start Threshold of Area 17 of B Signal Unsigned (0 to 255 [LSB]) Threshold of previous area ≤ Threshold of current area < Threshold of next area
15 to 8	GAM_B_TH_18 [7:0]	144	R/W	Start Threshold of Area 18 of B Signal Unsigned (0 to 255 [LSB]) Threshold of previous area ≤ Threshold of current area < Threshold of next area
7 to 0	GAM_B_TH_19 [7:0]	152	R/W	Start Threshold of Area 19 of B Signal Unsigned (0 to 255 [LSB]) Threshold of previous area ≤ Threshold of current area < Threshold of next area

Note: This register is updated when GAM_B_VEN in GAM_B_UPDATE is 1.

chanhvinh.com

36.2.19 Area Setting Register B6 in Gamma Correction Block (GAM_B_AREA6)

Bit:	31	30	29	28	27	26	25	24	23	22	21	20	19	18	17	16
	GAM_B_TH_20[7:0]								GAM_B_TH_21[7:0]							
Initial value:	1	0	1	0	0	0	0	0	1	0	1	0	1	0	0	0
R/W:	R/W	R/W	R/W	R/W	R/W	R/W	R/W	R/W	R/W	R/W	R/W	R/W	R/W	R/W	R/W	R/W

Bit:	15	14	13	12	11	10	9	8	7	6	5	4	3	2	1	0
	GAM_B_TH_22[7:0]								GAM_B_TH_23[7:0]							
Initial value:	1	0	1	1	0	0	0	0	1	0	1	1	1	0	0	0
R/W:	R/W	R/W	R/W	R/W	R/W	R/W	R/W	R/W	R/W	R/W	R/W	R/W	R/W	R/W	R/W	R/W

Bit	Bit Name	Initial Value	R/W	Description
31 to 24	GAM_B_TH_20 [7:0]	160	R/W	Start Threshold of Area 20 of B Signal Unsigned (0 to 255 [LSB]) Threshold of previous area ≤ Threshold of current area < Threshold of next area
23 to 16	GAM_B_TH_21 [7:0]	168	R/W	Start Threshold of Area 21 of B Signal Unsigned (0 to 255 [LSB]) Threshold of previous area ≤ Threshold of current area < Threshold of next area
15 to 8	GAM_B_TH_22 [7:0]	176	R/W	Start Threshold of Area 22 of B Signal Unsigned (0 to 255 [LSB]) Threshold of previous area ≤ Threshold of current area < Threshold of next area
7 to 0	GAM_B_TH_23 [7:0]	184	R/W	Start Threshold of Area 23 of B Signal Unsigned (0 to 255 [LSB]) Threshold of previous area ≤ Threshold of current area < Threshold of next area

Note: This register is updated when GAM_B_VEN in GAM_B_UPDATE is 1.

chanhvinh.com

36.2.20 Area Setting Register B7 in Gamma Correction Block (GAM_B_AREA7)

Bit:	31	30	29	28	27	26	25	24	23	22	21	20	19	18	17	16
	GAM_B_TH_24[7:0]								GAM_B_TH_25[7:0]							
Initial value:	1	1	0	0	0	0	0	0	1	1	0	0	1	0	0	0
R/W:	R/W	R/W	R/W	R/W	R/W	R/W	R/W	R/W	R/W	R/W	R/W	R/W	R/W	R/W	R/W	R/W

Bit:	15	14	13	12	11	10	9	8	7	6	5	4	3	2	1	0
	GAM_B_TH_26[7:0]								GAM_B_TH_27[7:0]							
Initial value:	1	1	0	1	0	0	0	0	1	1	0	1	1	0	0	0
R/W:	R/W	R/W	R/W	R/W	R/W	R/W	R/W	R/W	R/W	R/W	R/W	R/W	R/W	R/W	R/W	R/W

Bit	Bit Name	Initial Value	R/W	Description
31 to 24	GAM_B_TH_24 [7:0]	192	R/W	Start Threshold of Area 24 of B Signal Unsigned (0 to 255 [LSB]) Threshold of previous area ≤ Threshold of current area < Threshold of next area
23 to 16	GAM_B_TH_25 [7:0]	200	R/W	Start Threshold of Area 25 of B Signal Unsigned (0 to 255 [LSB]) Threshold of previous area ≤ Threshold of current area < Threshold of next area
15 to 8	GAM_B_TH_26 [7:0]	208	R/W	Start Threshold of Area 26 of B Signal Unsigned (0 to 255 [LSB]) Threshold of previous area ≤ Threshold of current area < Threshold of next area
7 to 0	GAM_B_TH_27 [7:0]	216	R/W	Start Threshold of Area 27 of B Signal Unsigned (0 to 255 [LSB]) Threshold of previous area ≤ Threshold of current area < Threshold of next area

Note: This register is updated when GAM_B_VEN in GAM_B_UPDATE is 1.

chanhvinh.com

36.2.21 Area Setting Register B8 in Gamma Correction Block (GAM_B_AREA8)

Bit:	31	30	29	28	27	26	25	24	23	22	21	20	19	18	17	16
	GAM_B_TH_28[7:0]								GAM_B_TH_29[7:0]							
Initial value:	1	1	1	0	0	0	0	0	1	1	1	0	1	0	0	0
R/W:	R/W	R/W	R/W	R/W	R/W	R/W	R/W	R/W	R/W	R/W	R/W	R/W	R/W	R/W	R/W	R/W

Bit:	15	14	13	12	11	10	9	8	7	6	5	4	3	2	1	0
	GAM_B_TH_30[7:0]								GAM_B_TH_31[7:0]							
Initial value:	1	1	1	1	0	0	0	0	1	1	1	1	1	0	0	0
R/W:	R/W	R/W	R/W	R/W	R/W	R/W	R/W	R/W	R/W	R/W	R/W	R/W	R/W	R/W	R/W	R/W

Bit	Bit Name	Initial Value	R/W	Description
31 to 24	GAM_B_TH_28 [7:0]	224	R/W	Start Threshold of Area 28 of B Signal Unsigned (0 to 255 [LSB]) Threshold of previous area ≤ Threshold of current area < Threshold of next area
23 to 16	GAM_B_TH_29 [7:0]	232	R/W	Start Threshold of Area 29 of B Signal Unsigned (0 to 255 [LSB]) Threshold of previous area ≤ Threshold of current area < Threshold of next area
15 to 8	GAM_B_TH_30 [7:0]	240	R/W	Start Threshold of Area 30 of B Signal Unsigned (0 to 255 [LSB]) Threshold of previous area ≤ Threshold of current area < Threshold of next area
7 to 0	GAM_B_TH_31 [7:0]	248	R/W	Start Threshold of Area 31 of B Signal Unsigned (0 to 255 [LSB]) Threshold of previous area ≤ Threshold of current area < Threshold of next area

Note: This register is updated when GAM_B_VEN in GAM_B_UPDATE is 1.

chanhvinh.com

36.2.22 Register Update Control Register R in Gamma Correction Block (GAM_R_UPDATE)

Bit:	31	30	29	28	27	26	25	24	23	22	21	20	19	18	17	16
	—	—	—	—	—	—	—	—	—	—	—	—	—	—	—	—
Initial value:	0	0	0	0	0	0	0	0	0	0	0	0	0	0	0	0
R/W:	R	R	R	R	R	R	R	R	R	R	R	R	R	R	R	R

Bit:	15	14	13	12	11	10	9	8	7	6	5	4	3	2	1	0
	—	—	—	—	—	—	—	—	—	—	—	—	—	—	—	GAM_R_VEN
Initial value:	0	0	0	0	0	0	0	0	0	0	0	0	0	0	0	0
R/W:	R	R	R	R	R	R	R	R	R	R	R	R	R	R	R	R/WC1

Bit	Bit Name	Initial Value	R/W	Description
31 to 1	—	All 0	R	Reserved These bits are always read as 0. The write value should always be 0.
0	GAM_R_VEN	0	R/WC1	Gamma Correction (R) Register Update 0: Registers are not updated. 1: Registers are updated at the rising edge of the Vsync.

chanhvinh.com

36.2.23 Table Setting Register R1 to R16 in Gamma Correction Block (GAM_R_LUT1 to GAM_R_LUT16)

Bit:	31	30	29	28	27	26	25	24	23	22	21	20	19	18	17	16
	—	—	—	—	—	GAM_R_GAIN_xx[10:0]										
Initial value:	0	0	0	0	0	1	0	0	0	0	0	0	0	0	0	0
R/W:	R	R	R	R	R	R/W	R/W	R/W	R/W	R/W	R/W	R/W	R/W	R/W	R/W	R/W

Bit:	15	14	13	12	11	10	9	8	7	6	5	4	3	2	1	0
	—	—	—	—	—	GAM_R_GAIN_yy[10:0]										
Initial value:	0	0	0	0	0	1	0	0	0	0	0	0	0	0	0	0
R/W:	R	R	R	R	R	R/W	R/W	R/W	R/W	R/W	R/W	R/W	R/W	R/W	R/W	R/W

Bit	Bit Name	Initial Value	R/W	Description
31 to 27	—	All 0	R	Reserved These bits are always read as 0. The write value should always be 0.
26 to 16	*	1024	R/W	GAM_R_LUT1: Gain Adjustment of Area 0 of R Signal GAM_R_LUT2: Gain Adjustment of Area 2 of R Signal GAM_R_LUT3: Gain Adjustment of Area 4 of R Signal GAM_R_LUT4: Gain Adjustment of Area 6 of R Signal GAM_R_LUT5: Gain Adjustment of Area 8 of R Signal GAM_R_LUT6: Gain Adjustment of Area 10 of R Signal GAM_R_LUT7: Gain Adjustment of Area 12 of R Signal GAM_R_LUT8: Gain Adjustment of Area 14 of R Signal GAM_R_LUT9: Gain Adjustment of Area 16 of R Signal GAM_R_LUT10: Gain Adjustment of Area 18 of R Signal GAM_R_LUT11: Gain Adjustment of Area 20 of R Signal GAM_R_LUT12: Gain Adjustment of Area 22 of R Signal GAM_R_LUT13: Gain Adjustment of Area 24 of R Signal GAM_R_LUT14: Gain Adjustment of Area 26 of R Signal GAM_R_LUT15: Gain Adjustment of Area 28 of R Signal GAM_R_LUT16: Gain Adjustment of Area 30 of R Signal Unsigned (0 to 2047 [LSB], 1024 [LSB] = 1.0 [times])

chanhvinh.com

Bit	Bit Name	Initial Value	R/W	Description
26 to 16	*	1024	R/W	*: Bit Name GAM_R_LUT1: GAM_R_GAIN_00[10:0] GAM_R_LUT2: GAM_R_GAIN_02[10:0] GAM_R_LUT3: GAM_R_GAIN_04[10:0] GAM_R_LUT4: GAM_R_GAIN_06[10:0] GAM_R_LUT5: GAM_R_GAIN_08[10:0] GAM_R_LUT6: GAM_R_GAIN_10[10:0] GAM_R_LUT7: GAM_R_GAIN_12[10:0] GAM_R_LUT8: GAM_R_GAIN_14[10:0] GAM_R_LUT9: GAM_R_GAIN_16[10:0] GAM_R_LUT10: GAM_R_GAIN_18[10:0] GAM_R_LUT11: GAM_R_GAIN_20[10:0] GAM_R_LUT12: GAM_R_GAIN_22[10:0] GAM_R_LUT13: GAM_R_GAIN_24[10:0] GAM_R_LUT14: GAM_R_GAIN_26[10:0] GAM_R_LUT15: GAM_R_GAIN_28[10:0] GAM_R_LUT16: GAM_R_GAIN_30[10:0]
15 to 11	—	All 0	R	Reserved These bits are always read as 0. The write value should always be 0.
10 to 0	*	1024	R/W	GAM_R_LUT1: Gain Adjustment of Area 1 of R Signal GAM_R_LUT2: Gain Adjustment of Area 3 of R Signal GAM_R_LUT3: Gain Adjustment of Area 5 of R Signal GAM_R_LUT4: Gain Adjustment of Area 7 of R Signal GAM_R_LUT5: Gain Adjustment of Area 9 of R Signal GAM_R_LUT6: Gain Adjustment of Area 11 of R Signal GAM_R_LUT7: Gain Adjustment of Area 13 of R Signal GAM_R_LUT8: Gain Adjustment of Area 15 of R Signal GAM_R_LUT9: Gain Adjustment of Area 17 of R Signal GAM_R_LUT10: Gain Adjustment of Area 19 of R Signal

chanhvinh.com

Bit	Bit Name	Initial Value	R/W	Description
10 to 0	*	1024	R/W	GAM_R_LUT11: Gain Adjustment of Area 21 of R Signal GAM_R_LUT12: Gain Adjustment of Area 23 of R Signal GAM_R_LUT13: Gain Adjustment of Area 25 of R Signal GAM_R_LUT14: Gain Adjustment of Area 27 of R Signal GAM_R_LUT15: Gain Adjustment of Area 29 of R Signal GAM_R_LUT16: Gain Adjustment of Area 31 of R Signal Unsigned (0 to 2047 [LSB], 1024 [LSB] = 1.0 [times]) *: Bit Name GAM_R_LUT1: GAM_R_GAIN_01[10:0] GAM_R_LUT2: GAM_R_GAIN_03[10:0] GAM_R_LUT3: GAM_R_GAIN_05[10:0] GAM_R_LUT4: GAM_R_GAIN_07[10:0] GAM_R_LUT5: GAM_R_GAIN_09[10:0] GAM_R_LUT6: GAM_R_GAIN_11[10:0] GAM_R_LUT7: GAM_R_GAIN_13[10:0] GAM_R_LUT8: GAM_R_GAIN_15[10:0] GAM_R_LUT9: GAM_R_GAIN_17[10:0] GAM_R_LUT10: GAM_R_GAIN_19[10:0] GAM_R_LUT11: GAM_R_GAIN_21[10:0] GAM_R_LUT12: GAM_R_GAIN_23[10:0] GAM_R_LUT13: GAM_R_GAIN_25[10:0] GAM_R_LUT14: GAM_R_GAIN_27[10:0] GAM_R_LUT15: GAM_R_GAIN_29[10:0] GAM_R_LUT16: GAM_R_GAIN_31[10:0]

Note: This register is updated when GAM_R_VEN in GAM_R_UPDATE is 1.

chanhvinh.com

36.2.24 Area Setting Register R1 in Gamma Correction Block (GAM_R_AREA1)

Bit:	31	30	29	28	27	26	25	24	23	22	21	20	19	18	17	16
	—	—	—	—	—	—	—	—	GAM_R_TH_01[7:0]							
Initial value:	0	0	0	0	0	0	0	0	0	0	0	0	1	0	0	0
R/W:	R	R	R	R	R	R	R	R	R/W	R/W	R/W	R/W	R/W	R/W	R/W	R/W

Bit:	15	14	13	12	11	10	9	8	7	6	5	4	3	2	1	0
	GAM_R_TH_02[7:0]								GAM_R_TH_03[7:0]							
Initial value:	0	0	0	1	0	0	0	0	0	0	0	1	1	0	0	0
R/W:	R/W	R/W	R/W	R/W	R/W	R/W	R/W	R/W	R/W	R/W	R/W	R/W	R/W	R/W	R/W	R/W

Bit	Bit Name	Initial Value	R/W	Description
31 to 24	—	All 0	R	Reserved These bits are always read as 0. The write value should always be 0.
23 to 16	GAM_R_TH_01[7:0]	8	R/W	Start Threshold of Area 1 of R Signal Unsigned (0 to 255 [LSB]) 0 ≤ Threshold of current area < Threshold of next area
15 to 8	GAM_R_TH_02[7:0]	16	R/W	Start Threshold of Area 2 of R Signal Unsigned (0 to 255 [LSB]) Threshold of previous area ≤ Threshold of current area < Threshold of next area
7 to 0	GAM_R_TH_03[7:0]	24	R/W	Start Threshold of Area 3 of R Signal Unsigned (0 to 255 [LSB]) Threshold of previous area ≤ Threshold of current area < Threshold of next area d

Note: This register is updated when GAM_R_VEN in GAM_R_UPDATE is 1.

chanhvinh.com

36.2.25 Area Setting Register R2 in Gamma Correction Block (GAM_R_AREA2)

Bit:	31	30	29	28	27	26	25	24	23	22	21	20	19	18	17	16
	GAM_R_TH_04[7:0]								GAM_R_TH_05[7:0]							
Initial value:	0	0	1	0	0	0	0	0	0	0	1	0	1	0	0	0
R/W:	R/W	R/W	R/W	R/W	R/W	R/W	R/W	R/W	R/W	R/W	R/W	R/W	R/W	R/W	R/W	R/W

Bit:	15	14	13	12	11	10	9	8	7	6	5	4	3	2	1	0
	GAM_R_TH_06[7:0]								GAM_R_TH_07[7:0]							
Initial value:	0	0	1	1	0	0	0	0	0	0	1	1	1	0	0	0
R/W:	R/W	R/W	R/W	R/W	R/W	R/W	R/W	R/W	R/W	R/W	R/W	R/W	R/W	R/W	R/W	R/W

Bit	Bit Name	Initial Value	R/W	Description
31 to 24	GAM_R_TH_04[7:0]	32	R/W	Start Threshold of Area 4 of R Signal Unsigned (0 to 255 [LSB]) Threshold of previous area ≤ Threshold of current area < Threshold of next area
23 to 16	GAM_R_TH_05[7:0]	40	R/W	Start Threshold of Area 5 of R Signal Unsigned (0 to 255 [LSB]) Threshold of previous area ≤ Threshold of current area < Threshold of next area
15 to 8	GAM_R_TH_06[7:0]	48	R/W	Start Threshold of Area 6 of R Signal Unsigned (0 to 255 [LSB]) Threshold of previous area ≤ Threshold of current area < Threshold of next area
7 to 0	GAM_R_TH_07[7:0]	56	R/W	Start Threshold of Area 7 of R Signal Unsigned (0 to 255 [LSB]) Threshold of previous area ≤ Threshold of current area < Threshold of next area d

Note: This register is updated when GAM_R_VEN in GAM_R_UPDATE is 1.

chanhvinh.com

36.2.26 Area Setting Register R3 in Gamma Correction Block (GAM_R_AREA3)

Bit:	31	30	29	28	27	26	25	24	23	22	21	20	19	18	17	16
	GAM_R_TH_08[7:0]								GAM_R_TH_09[7:0]							
Initial value:	0	1	0	0	0	0	0	0	0	1	0	0	1	0	0	0
R/W:	R/W	R/W	R/W	R/W	R/W	R/W	R/W	R/W	R/W	R/W	R/W	R/W	R/W	R/W	R/W	R/W

Bit:	15	14	13	12	11	10	9	8	7	6	5	4	3	2	1	0
	GAM_R_TH_10[7:0]								GAM_R_TH_11[7:0]							
Initial value:	0	1	0	1	0	0	0	0	0	1	0	1	1	0	0	0
R/W:	R/W	R/W	R/W	R/W	R/W	R/W	R/W	R/W	R/W	R/W	R/W	R/W	R/W	R/W	R/W	R/W

Bit	Bit Name	Initial Value	R/W	Description
31 to 24	GAM_R_TH_08[7:0]	64	R/W	Start Threshold of Area 8 of R Signal Unsigned (0 to 255 [LSB]) Threshold of previous area ≤ Threshold of current area < Threshold of next area
23 to 16	GAM_R_TH_09[7:0]	72	R/W	Start Threshold of Area 9 of R Signal Unsigned (0 to 255 [LSB]) Threshold of previous area ≤ Threshold of current area < Threshold of next area
15 to 8	GAM_R_TH_10[7:0]	80	R/W	Start Threshold of Area 10 of R Signal Unsigned (0 to 255 [LSB]) Threshold of previous area ≤ Threshold of current area < Threshold of next area
7 to 0	GAM_R_TH_11[7:0]	88	R/W	Start Threshold of Area 11 of R Signal Unsigned (0 to 255 [LSB]) Threshold of previous area ≤ Threshold of current area < Threshold of next area

Note: This register is updated when GAM_R_VEN in GAM_R_UPDATE is 1.

chanhvinh.com

36.2.27 Area Setting Register R4 in Gamma Correction Block (GAM_R_AREA4)

Bit:	31	30	29	28	27	26	25	24	23	22	21	20	19	18	17	16
	GAM_R_TH_12[7:0]								GAM_R_TH_13[7:0]							
Initial value:	0	1	1	0	0	0	0	0	0	1	1	0	1	0	0	0
R/W:	R/W	R/W	R/W	R/W	R/W	R/W	R/W	R/W	R/W	R/W	R/W	R/W	R/W	R/W	R/W	R/W

Bit:	15	14	13	12	11	10	9	8	7	6	5	4	3	2	1	0
	GAM_R_TH_14[7:0]								GAM_R_TH_15[7:0]							
Initial value:	0	1	1	1	0	0	0	0	0	1	1	1	1	0	0	0
R/W:	R/W	R/W	R/W	R/W	R/W	R/W	R/W	R/W	R/W	R/W	R/W	R/W	R/W	R/W	R/W	R/W

Bit	Bit Name	Initial Value	R/W	Description
31 to 24	GAM_R_TH_12[7:0]	96	R/W	Start Threshold of Area 12 of R Signal Unsigned (0 to 255 [LSB]) Threshold of previous area ≤ Threshold of current area < Threshold of next area
23 to 16	GAM_R_TH_13[7:0]	104	R/W	Start Threshold of Area 13 of R Signal Unsigned (0 to 255 [LSB]) Threshold of previous area ≤ Threshold of current area < Threshold of next area
15 to 8	GAM_R_TH_14[7:0]	112	R/W	Start Threshold of Area 14 of R Signal Unsigned (0 to 255 [LSB]) Threshold of previous area ≤ Threshold of current area < Threshold of next area
7 to 0	GAM_R_TH_15[7:0]	120	R/W	Start Threshold of Area 15 of R Signal Unsigned (0 to 255 [LSB]) Threshold of previous area ≤ Threshold of current area < Threshold of next area

Note: This register is updated when GAM_R_VEN in GAM_R_UPDATE is 1.

chanhvinh.com

36.2.28 Area Setting Register R5 in Gamma Correction Block (GAM_R_AREA5)

Bit:	31	30	29	28	27	26	25	24	23	22	21	20	19	18	17	16
	GAM_R_TH_16[7:0]								GAM_R_TH_17[7:0]							
Initial value:	1	0	0	0	0	0	0	0	1	0	0	0	1	0	0	0
R/W:	R/W	R/W	R/W	R/W	R/W	R/W	R/W	R/W	R/W	R/W	R/W	R/W	R/W	R/W	R/W	R/W

Bit:	15	14	13	12	11	10	9	8	7	6	5	4	3	2	1	0
	GAM_R_TH_18[7:0]								GAM_R_TH_19[7:0]							
Initial value:	1	0	0	1	0	0	0	0	1	0	0	1	1	0	0	0
R/W:	R/W	R/W	R/W	R/W	R/W	R/W	R/W	R/W	R/W	R/W	R/W	R/W	R/W	R/W	R/W	R/W

Bit	Bit Name	Initial Value	R/W	Description
31 to 24	GAM_R_TH_16[7:0]	128	R/W	Start Threshold of Area 16 of R Signal Unsigned (0 to 255 [LSB]) Threshold of previous area ≤ Threshold of current area < Threshold of next area
23 to 16	GAM_R_TH_17[7:0]	136	R/W	Start Threshold of Area 17 of R Signal Unsigned (0 to 255 [LSB]) Threshold of previous area ≤ Threshold of current area < Threshold of next area
15 to 8	GAM_R_TH_18[7:0]	144	R/W	Start Threshold of Area 18 of R Signal Unsigned (0 to 255 [LSB]) Threshold of previous area ≤ Threshold of current area < Threshold of next area
7 to 0	GAM_R_TH_19[7:0]	152	R/W	Start Threshold of Area 19 of R Signal Unsigned (0 to 255 [LSB]) Threshold of previous area ≤ Threshold of current area < Threshold of next area

Note: This register is updated when GAM_R_VEN in GAM_R_UPDATE is 1.

chanhvinh.com

36.2.29 Area Setting Register R6 in Gamma Correction Block (GAM_R_AREA6)

Bit:	31	30	29	28	27	26	25	24	23	22	21	20	19	18	17	16
	GAM_R_TH_20[7:0]								GAM_R_TH_21[7:0]							
Initial value:	1	0	1	0	0	0	0	0	1	0	1	0	1	0	0	0
R/W:	R/W	R/W	R/W	R/W	R/W	R/W	R/W	R/W	R/W	R/W	R/W	R/W	R/W	R/W	R/W	R/W

Bit:	15	14	13	12	11	10	9	8	7	6	5	4	3	2	1	0
	GAM_R_TH_22[7:0]								GAM_R_TH_23[7:0]							
Initial value:	1	0	1	1	0	0	0	0	1	0	1	1	1	0	0	0
R/W:	R/W	R/W	R/W	R/W	R/W	R/W	R/W	R/W	R/W	R/W	R/W	R/W	R/W	R/W	R/W	R/W

Bit	Bit Name	Initial Value	R/W	Description
31 to 24	GAM_R_TH_20[7:0]	160	R/W	Start Threshold of Area 20 of R Signal Unsigned (0 to 255 [LSB]) Threshold of previous area ≤ Threshold of current area < Threshold of next area
23 to 16	GAM_R_TH_21[7:0]	168	R/W	Start Threshold of Area 21 of R Signal Unsigned (0 to 255 [LSB]) Threshold of previous area ≤ Threshold of current area < Threshold of next area
15 to 8	GAM_R_TH_22[7:0]	176	R/W	Start Threshold of Area 22 of R Signal Unsigned (0 to 255 [LSB]) Threshold of previous area ≤ Threshold of current area < Threshold of next area
7 to 0	GAM_R_TH_23[7:0]	184	R/W	Start Threshold of Area 23 of R Signal Unsigned (0 to 255 [LSB]) Threshold of previous area ≤ Threshold of current area < Threshold of next area

Note: This register is updated when GAM_R_VEN in GAM_R_UPDATE is 1.

chanhvinh.com

36.2.30 Area Setting Register R7 in Gamma Correction Block (GAM_R_AREA7)

Bit:	31	30	29	28	27	26	25	24	23	22	21	20	19	18	17	16
	GAM_R_TH_24[7:0]								GAM_R_TH_25[7:0]							
Initial value:	1	1	0	0	0	0	0	0	1	1	0	0	1	0	0	0
R/W:	R/W	R/W	R/W	R/W	R/W	R/W	R/W	R/W	R/W	R/W	R/W	R/W	R/W	R/W	R/W	R/W

Bit:	15	14	13	12	11	10	9	8	7	6	5	4	3	2	1	0
	GAM_R_TH_26[7:0]								GAM_R_TH_27[7:0]							
Initial value:	1	1	0	1	0	0	0	0	1	1	0	1	1	0	0	0
R/W:	R/W	R/W	R/W	R/W	R/W	R/W	R/W	R/W	R/W	R/W	R/W	R/W	R/W	R/W	R/W	R/W

Bit	Bit Name	Initial Value	R/W	Description
31 to 24	GAM_R_TH_24[7:0]	192	R/W	Start Threshold of Area 24 of R Signal Unsigned (0 to 255 [LSB]) Threshold of previous area ≤ Threshold of current area < Threshold of next area
23 to 16	GAM_R_TH_25[7:0]	200	R/W	Start Threshold of Area 25 of R Signal Unsigned (0 to 255 [LSB]) Threshold of previous area ≤ Threshold of current area < Threshold of next area
15 to 8	GAM_R_TH_26[7:0]	208	R/W	Start Threshold of Area 26 of R Signal Unsigned (0 to 255 [LSB]) Threshold of previous area ≤ Threshold of current area < Threshold of next area
7 to 0	GAM_R_TH_27[7:0]	216	R/W	Start Threshold of Area 27 of R Signal Unsigned (0 to 255 [LSB]) Threshold of previous area ≤ Threshold of current area < Threshold of next area

Note: This register is updated when GAM_R_VEN in GAM_R_UPDATE is 1.

chanhvinh.com

36.2.31 Area Setting Register R8 in Gamma Correction Block (GAM_R_AREA8)

Bit:	31	30	29	28	27	26	25	24	23	22	21	20	19	18	17	16
	GAM_R_TH_28[7:0]								GAM_R_TH_29[7:0]							
Initial value:	1	1	1	0	0	0	0	0	1	1	1	0	1	0	0	0
R/W:	R/W	R/W	R/W	R/W	R/W	R/W	R/W	R/W	R/W	R/W	R/W	R/W	R/W	R/W	R/W	R/W

Bit:	15	14	13	12	11	10	9	8	7	6	5	4	3	2	1	0
	GAM_R_TH_30[7:0]								GAM_R_TH_31[7:0]							
Initial value:	1	1	1	1	0	0	0	0	1	1	1	1	1	0	0	0
R/W:	R/W	R/W	R/W	R/W	R/W	R/W	R/W	R/W	R/W	R/W	R/W	R/W	R/W	R/W	R/W	R/W

Bit	Bit Name	Initial Value	R/W	Description
31 to 24	GAM_R_TH_28[7:0]	224	R/W	Start Threshold of Area 28 of R Signal Unsigned (0 to 255 [LSB]) Threshold of previous area ≤ Threshold of current area < Threshold of next area
23 to 16	GAM_R_TH_29[7:0]	232	R/W	Start Threshold of Area 29 of R Signal Unsigned (0 to 255 [LSB]) Threshold of previous area ≤ Threshold of current area < Threshold of next area
15 to 8	GAM_R_TH_30[7:0]	240	R/W	Start Threshold of Area 30 of R Signal Unsigned (0 to 255 [LSB]) Threshold of previous area ≤ Threshold of current area < Threshold of next area
7 to 0	GAM_R_TH_31[7:0]	248	R/W	Start Threshold of Area 31 of R Signal Unsigned (0 to 255 [LSB]) Threshold of previous area ≤ Threshold of current area < Threshold of next area

Note: This register is updated when GAM_R_VEN in GAM_R_UPDATE is 1.

chanhvinh.com

36.2.32 TCON Register Update Control Register (TCON_UPDATE)

Bit:	31	30	29	28	27	26	25	24	23	22	21	20	19	18	17	16
	—	—	—	—	—	—	—	—	—	—	—	—	—	—	—	—
Initial value:	0	0	0	0	0	0	0	0	0	0	0	0	0	0	0	0
R/W:	R	R	R	R	R	R	R	R	R	R	R	R	R	R	R	R

Bit:	15	14	13	12	11	10	9	8	7	6	5	4	3	2	1	0
	—	—	—	—	—	—	—	—	—	—	—	—	—	—	—	TCON_VEN
Initial value:	0	0	0	0	0	0	0	0	0	0	0	0	0	0	0	0
R/W:	R	R	R	R	R	R	R	R	R	R	R	R	R	R	R	R/WC1

Bit	Bit Name	Initial Value	R/W	Description
31 to 1	—	All 0	R	Reserved These bits are always read as 0. The write value should always be 0.
0	TCON_VEN	0	R/WC1	LCD TCON Register Update 0: Registers are not updated. 1: Registers are updated at the rising edge of the Vsync.

chanhvinh.com

36.2.33 TCON Reference Timing Setting Register (TCON_TIM)

Bit:	31	30	29	28	27	26	25	24	23	22	21	20	19	18	17	16
	—	—	—	—	—	TCON_HALF[10:0]										
Initial value:	0	0	0	0	0	0	0	1	1	0	0	1	0	0	0	0
R/W:	R	R	R	R	R	R/W	R/W	R/W	R/W	R/W	R/W	R/W	R/W	R/W	R/W	R/W

Bit:	15	14	13	12	11	10	9	8	7	6	5	4	3	2	1	0
	—	—	—	—	—	TCON_OFFSET[10:0]										
Initial value:	0	0	0	0	0	0	0	0	0	0	0	0	0	0	0	0
R/W:	R	R	R	R	R	R/W	R/W	R/W	R/W	R/W	R/W	R/W	R/W	R/W	R/W	R/W

Bit	Bit Name	Initial Value	R/W	Description
31 to 27	—	All 0	R	Reserved These bits are always read as 0. The write value should always be 0.
26 to 16	TCON_HALF [10:0]	400	R/W	1/2fH Timing Specifies the clock count from the rising edge of the Hsync signal as the counting timing of horizontal counter.
15 to 11	—	All 0	R	Reserved These bits are always read as 0. The write value should always be 0.
10 to 0	TCON_OFFSET[10:0]	0	R/W	Offset Hsync Signal Timing Sets the clock cycle count from the rising edge of the Hsync signal.

Note: This register is updated when TCON_VEN in TCON_UPDATE is 1.

chanhvinh.com

36.2.34 TCON Vertical Timing Setting Register A1 (TCON_TIM_STVA1)

Bit:	31	30	29	28	27	26	25	24	23	22	21	20	19	18	17	16
	—	—	—	—	—	TCON_STVA_VS[10:0]										
Initial value:	0	0	0	0	0	0	0	0	0	0	0	0	0	0	0	0
R/W:	R	R	R	R	R	R/W	R/W	R/W	R/W	R/W	R/W	R/W	R/W	R/W	R/W	R/W

Bit:	15	14	13	12	11	10	9	8	7	6	5	4	3	2	1	0
	—	—	—	—	—	TCON_STVA_VW[10:0]										
Initial value:	0	0	0	0	0	0	0	0	0	0	0	0	0	1	0	0
R/W:	R	R	R	R	R	R/W	R/W	R/W	R/W	R/W	R/W	R/W	R/W	R/W	R/W	R/W

Bit	Bit Name	Initial Value	R/W	Description
31 to 27	—	All 0	R	Reserved These bits are always read as 0. The write value should always be 0.
26 to 16	TCON_ STVA_VS [10:0]	0	R/W	STVA Signal Pulse Start Position (First Changing Timing) Starts pulse output after the time specified by the value of TCON_STVA_VS from the rising edge of the Vsync signal (1/2fH cycles).
15 to 11	—	All 0	R	Reserved These bits are always read as 0. The write value should always be 0.
10 to 0	TCON_ STVA_VW [10:0]	4	R/W	STVA Pulse Width (Second Changing Timing) Outputs a pulse of the duration of the value of TCON_STVA_VW (1/2fH cycles).

Note: This register is updated when TCON_VEN in TCON_UPDATE is 1.

chanhvinh.com

36.2.35 TCON Vertical Timing Setting Register A2 (TCON_TIM_STVA2)

Bit:	31	30	29	28	27	26	25	24	23	22	21	20	19	18	17	16
	—	—	—	—	—	—	—	—	—	—	—	—	—	—	—	—
Initial value:	0	0	0	0	0	0	0	0	0	0	0	0	0	0	0	0
R/W:	R	R	R	R	R	R	R	R	R	R	R	R	R	R	R	R

Bit:	15	14	13	12	11	10	9	8	7	6	5	4	3	2	1	0
	—	—	—	—	—	—	—	—	—	—	—	TCON_STVA_INV	—	TCON_STVA_SEL[2:0]		
Initial value:	0	0	0	0	0	0	0	0	0	0	0	1	0	0	0	0
R/W:	R	R	R	R	R	R	R	R	R	R	R	R/W	R	R/W	R/W	R/W

Bit	Bit Name	Initial Value	R/W	Description
31 to 5	—	All 0	R	Reserved These bits are always read as 0. The write value should always be 0.
4	TCON_STVA_INV	1	R/W	Polarity Inversion Control of STVA Signal 0: Not inverted 1: Inverted
3	—	0	R	Reserved This bit is always read as 0. The write value should always be 0.
2 to 0	TCON_STVA_SEL[2:0]	0	R/W	Output Signal Select for LCD_TCON0 Pin 0: STVA/VS 1: STVB/VE 2: STH/SP/HS 3: STB/LP/HE 4: CPV/GCK 5: POLA 6: POLB 7: DE

Note: This register is updated when TCON_VEN in TCON_UPDATE is 1.

chanhvinh.com

36.2.36 TCON Vertical Timing Setting Register B1 (TCON_TIM_STVB1)

Bit:	31	30	29	28	27	26	25	24	23	22	21	20	19	18	17	16
	—	—	—	—	—	TCON_STVB_VS[10:0]										
Initial value:	0	0	0	0	0	0	0	0	0	1	0	0	0	1	1	0
R/W:	R	R	R	R	R	R/W	R/W	R/W	R/W	R/W	R/W	R/W	R/W	R/W	R/W	R/W

Bit:	15	14	13	12	11	10	9	8	7	6	5	4	3	2	1	0
	—	—	—	—	—	TCON_STVB_VW[10:0]										
Initial value:	0	0	0	0	0	0	1	1	1	1	0	0	0	0	0	0
R/W:	R	R	R	R	R	R/W	R/W	R/W	R/W	R/W	R/W	R/W	R/W	R/W	R/W	R/W

Bit	Bit Name	Initial Value	R/W	Description
31 to 27	—	All 0	R	Reserved These bits are always read as 0. The write value should always be 0.
26 to 16	TCON_ STVB_VS [10:0]	70	R/W	STVB Signal Pulse Start Position (First Changing Timing) Starts pulse output after the time specified by the value of TCON_STVB_VS from the rising edge of the Vsync signal (1/2fH cycles).
15 to 11	—	All 0	R	Reserved These bits are always read as 0. The write value should always be 0.
10 to 0	TCON_ STVB_VW [10:0]	960	R/W	STVB Pulse Width (Second Changing Timing) Outputs a pulse of the duration of the value of TCON_STVB_VW (1/2fH cycles).

Note: This register is updated when TCON_VEN in TCON_UPDATE is 1.

chanhvinh.com

36.2.37 TCON Vertical Timing Setting Register B2 (TCON_TIM_STVB2)

Bit:	31	30	29	28	27	26	25	24	23	22	21	20	19	18	17	16
	—	—	—	—	—	—	—	—	—	—	—	—	—	—	—	—
Initial value:	0	0	0	0	0	0	0	0	0	0	0	0	0	0	0	0
R/W:	R	R	R	R	R	R	R	R	R	R	R	R	R	R	R	R

Bit:	15	14	13	12	11	10	9	8	7	6	5	4	3	2	1	0
	—	—	—	—	—	—	—	—	—	—	—	TCON_STVB_INV	—	TCON_STVB_SEL[2:0]		
Initial value:	0	0	0	0	0	0	0	0	0	0	0	0	0	0	0	1
R/W:	R	R	R	R	R	R	R	R	R	R	R	R/W	R	R/W	R/W	R/W

Bit	Bit Name	Initial Value	R/W	Description
31 to 5	—	All 0	R	Reserved These bits are always read as 0. The write value should always be 0.
4	TCON_STVB_INV	0	R/W	Polarity Inversion Control of STVB Signal 0: Not inverted 1: Inverted
3	—	0	R	Reserved This bit is always read as 0. The write value should always be 0.
2 to 0	TCON_STVB_SEL[2:0]	1	R/W	Output Signal Select for LCD_TCON1 Pin 0: STVA/VS 1: STVB/VE 2: STH/SP/HS 3: STB/LP/HE 4: CPV/GCK 5: POLA 6: POLB 7: DE

Note: This register is updated when TCON_VEN in TCON_UPDATE is 1.

chanhvinh.com

36.2.38 TCON Horizontal Timing Setting Register STH1 (TCON_TIM_STH1)

Bit:	31	30	29	28	27	26	25	24	23	22	21	20	19	18	17	16
	—	—	—	—	—	TCON_STH_HS[10:0]										
Initial value:	0	0	0	0	0	0	0	0	0	0	0	0	0	0	0	0
R/W:	R	R	R	R	R	R/W	R/W	R/W	R/W	R/W	R/W	R/W	R/W	R/W	R/W	R/W

Bit:	15	14	13	12	11	10	9	8	7	6	5	4	3	2	1	0
	—	—	—	—	—	TCON_STH_HW[10:0]										
Initial value:	0	0	0	0	0	0	0	0	0	1	1	0	0	0	0	0
R/W:	R	R	R	R	R	R/W	R/W	R/W	R/W	R/W	R/W	R/W	R/W	R/W	R/W	R/W

Bit	Bit Name	Initial Value	R/W	Description
31 to 27	—	All 0	R	Reserved These bits are always read as 0. The write value should always be 0.
26 to 16	TCON_STH_HS[10:0]	0	R/W	STH Signal Pulse Start Position (First Changing Timing) Starts pulse output after the time specified by the value of TCON_STH_HS + 1 from the rising edge of the Hsync signal (clock cycles).
15 to 11	—	All 0	R	Reserved These bits are always read as 0. The write value should always be 0.
10 to 0	TCON_STH_HW[10:0]	96	R/W	STH Pulse Width (Second Changing Timing) Outputs a pulse of the duration of the value of TCON_STH_HW (clock cycles).

Note: This register is updated when TCON_VEN in TCON_UPDATE is 1.

chanhvinh.com

36.2.39 TCON Horizontal Timing Setting Register STH2 (TCON_TIM_STH2)

Bit:	31	30	29	28	27	26	25	24	23	22	21	20	19	18	17	16
	—	—	—	—	—	—	—	—	—	—	—	—	—	—	—	—
Initial value:	0	0	0	0	0	0	0	0	0	0	0	0	0	0	0	0
R/W:	R	R	R	R	R	R	R	R	R	R	R	R	R	R	R	R

Bit:	15	14	13	12	11	10	9	8	7	6	5	4	3	2	1	0
	—	—	—	—	—	—	—	TCON_STH_HS_SEL	—	—	—	TCON_STH_INV	—	TCON_STH_SEL[2:0]		
Initial value:	0	0	0	0	0	0	0	0	0	0	0	1	0	0	1	0
R/W:	R	R	R	R	R	R	R	R/W	R	R	R	R/W	R	R/W	R/W	R/W

Bit	Bit Name	Initial Value	R/W	Description
31 to 9	—	All 0	R	Reserved These bits are always read as 0. The write value should always be 0.
8	TCON_STH_HS_SEL	0	R/W	STH Signal Operating Reference Select 0: Hsync signal reference 1: Offset Hsync signal reference
7 to 5	—	All 0	R	Reserved These bits are always read as 0. The write value should always be 0.
4	TCON_STH_INV	1	R/W	Polarity Inversion Control of STH Signal 0: Not inverted 1: Inverted
3	—	0	R	Reserved This bit is always read as 0. The write value should always be 0.
2 to 0	TCON_STH_SEL[2:0]	2	R/W	Output Signal Select for LCD_TCON2 Pin 0: STVA/VS 1: STVB/VE 2: STH/SP/HS 3: STB/LP/HE 4: CPV/GCK 5: POLA 6: POLB 7: DE

Note: This register is updated when TCON_VEN in TCON_UPDATE is 1.

chanhvinh.com

36.2.40 TCON Horizontal Timing Setting Register STB1 (TCON_TIM_STB1)

Bit:	31	30	29	28	27	26	25	24	23	22	21	20	19	18	17	16
	—	—	—	—	—	TCON_STB_HS[10:0]										
Initial value:	0	0	0	0	0	0	0	0	1	0	0	1	0	0	0	0
R/W:	R	R	R	R	R	R/W	R/W	R/W	R/W	R/W	R/W	R/W	R/W	R/W	R/W	R/W

Bit:	15	14	13	12	11	10	9	8	7	6	5	4	3	2	1	0
	—	—	—	—	—	TCON_STB_HW[10:0]										
Initial value:	0	0	0	0	0	0	1	0	1	0	0	0	0	0	0	0
R/W:	R	R	R	R	R	R/W	R/W	R/W	R/W	R/W	R/W	R/W	R/W	R/W	R/W	R/W

Bit	Bit Name	Initial Value	R/W	Description
31 to 27	—	All 0	R	Reserved These bits are always read as 0. The write value should always be 0.
26 to 16	TCON_STB_HS[10:0]	144	R/W	STB Signal Pulse Start Position (First Changing Timing) Starts pulse output after the time specified by the value of TCON_STB_HS + 1 from the rising edge of the Hsync signal (clock cycles).
15 to 11	—	All 0	R	Reserved These bits are always read as 0. The write value should always be 0.
10 to 0	TCON_STB_HW[10:0]	640	R/W	STB Pulse Width (Second Changing Timing) Outputs a pulse of the duration of the value of TCON_STB_HW (clock cycles).

Note: This register is updated when TCON_VEN in TCON_UPDATE is 1.

chanhvinh.com

36.2.41 TCON Horizontal Timing Setting Register STB2 (TCON_TIM_STB2)

Bit:	31	30	29	28	27	26	25	24	23	22	21	20	19	18	17	16
	—	—	—	—	—	—	—	—	—	—	—	—	—	—	—	—
Initial value:	0	0	0	0	0	0	0	0	0	0	0	0	0	0	0	0
R/W:	R	R	R	R	R	R	R	R	R	R	R	R	R	R	R	R

Bit:	15	14	13	12	11	10	9	8	7	6	5	4	3	2	1	0
	—	—	—	—	—	—	—	TCON_STB_HS_SEL	—	—	—	TCON_STB_INV	—	TCON_STB_SEL[2:0]		
Initial value:	0	0	0	0	0	0	0	0	0	0	0	0	0	1	1	1
R/W:	R	R	R	R	R	R	R	R/W	R	R	R	R/W	R	R/W	R/W	R/W

Bit	Bit Name	Initial Value	R/W	Description
31 to 9	—	All 0	R	Reserved These bits are always read as 0. The write value should always be 0.
8	TCON_STB_HS_SEL	0	R/W	STB Signal Operating Reference Select 0: Hsync signal reference 1: Offset Hsync signal reference
7 to 5	—	All 0	R	Reserved These bits are always read as 0. The write value should always be 0.
4	TCON_STB_INV	0	R/W	Polarity Inversion Control of STB Signal 0: Not inverted 1: Inverted
3	—	0	R	Reserved This bit is always read as 0. The write value should always be 0.
2 to 0	TCON_STB_SEL[2:0]	7	R/W	Output Signal Select for LCD_TCON3 Pin 0: STVA/VS 1: STVB/VE 2: STH/SP/HS 3: STB/LP/HE 4: CPV/GCK 5: POLA 6: POLB 7: DE

Note: This register is updated when TCON_VEN in TCON_UPDATE is 1.

chanhvinh.com

36.2.42 TCON Horizontal Timing Setting Register CPV1 (TCON_TIM_CPV1)

Bit:	31	30	29	28	27	26	25	24	23	22	21	20	19	18	17	16
	—	—	—	—	—	TCON_CPV_HS[10:0]										
Initial value:	0	0	0	0	0	0	0	0	0	0	0	0	0	0	0	0
R/W:	R	R	R	R	R	R/W	R/W	R/W	R/W	R/W	R/W	R/W	R/W	R/W	R/W	R/W

Bit:	15	14	13	12	11	10	9	8	7	6	5	4	3	2	1	0
	—	—	—	—	—	TCON_CPV_HW[10:0]										
Initial value:	0	0	0	0	0	0	0	0	0	0	0	0	0	0	0	0
R/W:	R	R	R	R	R	R/W	R/W	R/W	R/W	R/W	R/W	R/W	R/W	R/W	R/W	R/W

Bit	Bit Name	Initial Value	R/W	Description
31 to 27	—	All 0	R	Reserved These bits are always read as 0. The write value should always be 0.
26 to 16	TCON_CPV_HS[10:0]	0	R/W	CPV Signal Pulse Start Position (First Changing Timing) Starts pulse output after the time specified by the value of TCON_CPV_HS + 1 from the rising edge of the Hsync signal (clock cycles).
15 to 11	—	All 0	R	Reserved These bits are always read as 0. The write value should always be 0.
10 to 0	TCON_CPV_HW[10:0]	0	R/W	CPV Pulse Width (Second Changing Timing) Outputs a pulse of the duration of the value of TCON_CPV_HW (clock cycles).

Note: This register is updated when TCON_VEN in TCON_UPDATE is 1.

chanhvinh.com

36.2.43 TCON Horizontal Timing Setting Register CPV2 (TCON_TIM_CPV2)

Bit:	31	30	29	28	27	26	25	24	23	22	21	20	19	18	17	16
	—	—	—	—	—	—	—	—	—	—	—	—	—	—	—	—
Initial value:	0	0	0	0	0	0	0	0	0	0	0	0	0	0	0	0
R/W:	R	R	R	R	R	R	R	R	R	R	R	R	R	R	R	R

Bit:	15	14	13	12	11	10	9	8	7	6	5	4	3	2	1	0
	—	—	—	—	—	—	—	TCON_CPV_HS_SEL	—	—	—	TCON_CPV_INV	—	TCON_CPV_SEL[2:0]		
Initial value:	0	0	0	0	0	0	0	0	0	0	0	0	0	1	0	0
R/W:	R	R	R	R	R	R	R	R/W	R	R	R	R/W	R	R/W	R/W	R/W

Bit	Bit Name	Initial Value	R/W	Description
31 to 9	—	All 0	R	Reserved These bits are always read as 0. The write value should always be 0.
8	TCON_CPV_HS_SEL	0	R/W	CPV Signal Operating Reference Select 0: Hsync signal reference 1: Offset Hsync signal reference
7 to 5	—	All 0	R	Reserved These bits are always read as 0. The write value should always be 0.
4	TCON_CPV_INV	0	R/W	Polarity Inversion Control of CPV Signal 0: Not inverted 1: Inverted
3	—	0	R	Reserved This bit is always read as 0. The write value should always be 0.
2 to 0	TCON_CPV_SEL[2:0]	4	R/W	Output Signal Select for LCD_TCON4 Pin 0: STVA/VS 1: STVB/VE 2: STH/SP/HS 3: STB/LP/HE 4: CPV/GCK 5: POLA 6: POLB 7: DE

Note: This register is updated when TCON_VEN in TCON_UPDATE is 1.

chanhvinh.com

36.2.44 TCON Horizontal Timing Setting Register POLA1 (TCON_TIM_POLA1)

Bit:	31	30	29	28	27	26	25	24	23	22	21	20	19	18	17	16
	—	—	—	—	—	TCON_POLA_HS[10:0]										
Initial value:	0	0	0	0	0	0	0	0	0	0	0	0	0	0	0	0
R/W:	R	R	R	R	R	R/W	R/W	R/W	R/W	R/W	R/W	R/W	R/W	R/W	R/W	R/W

Bit:	15	14	13	12	11	10	9	8	7	6	5	4	3	2	1	0
	—	—	—	—	—	TCON_POLA_HW[10:0]										
Initial value:	0	0	0	0	0	0	0	0	0	0	0	0	0	0	0	0
R/W:	R	R	R	R	R	R/W	R/W	R/W	R/W	R/W	R/W	R/W	R/W	R/W	R/W	R/W

Bit	Bit Name	Initial Value	R/W	Description
31 to 27	—	All 0	R	Reserved These bits are always read as 0. The write value should always be 0.
26 to 16	TCON_ POLA_HS [10:0]	0	R/W	POLA Signal Pulse Start Position (First Changing Timing) Starts pulse output after the time specified by the value of TCON_POLA_HS from the rising edge of the Hsync signal (clock cycles). Note: When 1 x 1, 1 x 2, or 2 x 2 reverse mode is selected, these bits should be set to1 or greater.
15 to 11	—	All 0	R	Reserved These bits are always read as 0. The write value should always be 0.
10 to 0	TCON_ POLA_HW [10:0]	0	R/W	POLA Pulse Width (Second Changing Timing) Outputs a pulse of the duration of the value of TCON_POLA_HW (clock cycles).

Note: This register is updated when TCON_VEN in TCON_UPDATE is 1.

chanhvinh.com

36.2.45 TCON Horizontal Timing Setting Register POLA2 (TCON_TIM_POLA2)

Bit:	31	30	29	28	27	26	25	24	23	22	21	20	19	18	17	16
	—	—	—	—	—	—	—	—	—	—	—	—	—	—	—	—
Initial value:	0	0	0	0	0	0	0	0	0	0	0	0	0	0	0	0
R/W:	R	R	R	R	R	R	R	R	R	R	R	R	R	R	R	R

Bit:	15	14	13	12	11	10	9	8	7	6	5	4	3	2	1	0
	—	—	TCON_POLA_MD[1:0]		—	—	—	TCON_POLA_HS_SEL	—	—	—	TCON_POLA_INV	—	TCON_POLA_SEL[2:0]		
Initial value:	0	0	0	1	0	0	0	0	0	0	0	0	0	1	0	1
R/W:	R	R	R/W	R/W	R	R	R	R/W	R	R	R	R/W	R	R/W	R/W	R/W

Bit	Bit Name	Initial Value	R/W	Description
31 to 14	—	All 0	R	Reserved These bits are always read as 0. The write value should always be 0.
13, 12	TCON_POLA_MD[1:0]	1	R/W	POLA Signal Generation Mode Select 0: Normal mode Generates the signal that changes twice a horizontal period. 1: 1 x 1 reverse mode Generates the signal whose polarity is inverted every horizontal period. 2: 1 x 2 reverse mode Generates the signal whose polarity is inverted in the first horizontal period and is subsequently inverted every two horizontal periods. 3: 2 x 2 reverse mode Generates the signal whose polarity is inverted every two horizontal periods.
11 to 9	—	All 0	R	Reserved These bits are always read as 0. The write value should always be 0.

chanhvinh.com

Bit	Bit Name	Initial Value	R/W	Description
8	TCON_POLA_HS_SEL	0	R/W	POLA Signal Operating Reference Select 0: Hsync signal reference 1: Offset Hsync signal reference
7 to 5	—	All 0	R	Reserved These bits are always read as 0. The write value should always be 0.
4	TCON_POLA_INV	0	R/W	Polarity Inversion Control of POLA Signal 0: Not inverted 1: Inverted
3	—	0	R	Reserved This bit is always read as 0. The write value should always be 0.
2 to 0	TCON_POLA_SEL [2:0]	5	R/W	Output Signal Select for LCD_TCON5 pin 0: STVA/VS 1: STVB/VE 2: STH/SP/HS 3: STB/LP/HE 4: CPV/GCK 5: POLA 6: POLB 7: DE

Note: This register is updated when TCON_VEN in TCON_UPDATE is 1.

chanhvinh.com

36.2.46 TCON Horizontal Timing Setting Register POLB1 (TCON_TIM_POLB1)

Bit:	31	30	29	28	27	26	25	24	23	22	21	20	19	18	17	16
	—	—	—	—	—	TCON_POLB_HS[10:0]										
Initial value:	0	0	0	0	0	0	0	0	0	0	0	0	0	0	0	0
R/W:	R	R	R	R	R	R/W	R/W	R/W	R/W	R/W	R/W	R/W	R/W	R/W	R/W	R/W

Bit:	15	14	13	12	11	10	9	8	7	6	5	4	3	2	1	0
	—	—	—	—	—	TCON_POLB_HW[10:0]										
Initial value:	0	0	0	0	0	0	0	0	0	0	0	0	0	0	0	0
R/W:	R	R	R	R	R	R/W	R/W	R/W	R/W	R/W	R/W	R/W	R/W	R/W	R/W	R/W

Bit	Bit Name	Initial Value	R/W	Description
31 to 27	—	All 0	R	Reserved These bits are always read as 0. The write value should always be 0.
26 to 16	TCON_ POLB_HS [10:0]	0	R/W	POLB Signal Pulse Start Position (First Changing Timing) Starts pulse output after the time specified by the value of TCON_POLB_HS from the rising edge of the Hsync signal (clock cycles). Note: When 1 x 1, 1 x 2, or 2 x 2 reverse mode is selected, these bits should be set to1 or greater.
15 to 11	—	All 0	R	Reserved These bits are always read as 0. The write value should always be 0.
10 to 0	TCON_ POLB_HW [10:0]	0	R/W	POLB Pulse Width (Second Changing Timing) Outputs a pulse of the duration of the value of TCON_POLB_HW (clock cycles).

Note: This register is updated when TCON_VEN in TCON_UPDATE is 1.

chanhvinh.com

36.2.47 TCON Horizontal Timing Setting Register POLB2 (TCON_TIM_POLB2)

Bit:	31	30	29	28	27	26	25	24	23	22	21	20	19	18	17	16
	—	—	—	—	—	—	—	—	—	—	—	—	—	—	—	—
Initial value:	0	0	0	0	0	0	0	0	0	0	0	0	0	0	0	0
R/W:	R	R	R	R	R	R	R	R	R	R	R	R	R	R	R	R

Bit:	15	14	13	12	11	10	9	8	7	6	5	4	3	2	1	0
	—	—	TCON_POLB_MD[1:0]		—	—	—	TCON_POLB_HS_SEL	—	—	—	TCON_POLB_INV	—	TCON_POLB_SEL[2:0]		
Initial value:	0	0	0	1	0	0	0	0	0	0	0	0	0	1	1	0
R/W:	R	R	R/W	R/W	R	R	R	R/W	R	R	R	R/W	R	R/W	R/W	R/W

Bit	Bit Name	Initial Value	R/W	Description
31 to 14	—	All 0	R	Reserved These bits are always read as 0. The write value should always be 0.
13, 12	TCON_POLB_MD[1:0]	1	R/W	POLB Signal Generation Mode Select 0: Normal mode Generates the signal that changes twice a horizontal period. 1: 1 x 1 reverse mode Generates the signal whose polarity is inverted every horizontal period. 2: 1 x 2 reverse mode Generates the signal whose polarity is inverted in the first horizontal period and is subsequently inverted every two horizontal periods. 3: 2 x 2 reverse mode Generates the signal whose polarity is inverted every two horizontal periods.
11 to 9	—	All 0	R	Reserved These bits are always read as 0. The write value should always be 0.
8	TCON_POLB_HS_SEL	0	R/W	POLB Signal Operating Reference Select 0: Hsync signal reference 1: Offset Hsync signal reference

chanhvinh.com

Bit	Bit Name	Initial Value	R/W	Description
7 to 5	—	All 0	R	Reserved These bits are always read as 0. The write value should always be 0.
4	TCON_ POLB_INV	0	R/W	Polarity Inversion Control of POLB Signal 0: Not inverted 1: Inverted
3	—	0	R	Reserved This bit is always read as 0. The write value should always be 0.
2 to 0	TCON_ POLB_SEL [2:0]	6	R/W	Output Signal Select for LCD_TCON6 pin 0: STVA/VS 1: STVB/VE 2: STH/SP/HS 3: STB/LP/HE 4: CPV/GCK 5: POLA 6: POLB 7: DE

Note: This register is updated when TCON_VEN in TCON_UPDATE is 1.

chanhvinh.com

36.2.48 TCON Data Enable Polarity Setting Register (TCON_TIM_DE)

Bit:	31	30	29	28	27	26	25	24	23	22	21	20	19	18	17	16
	—	—	—	—	—	—	—	—	—	—	—	—	—	—	—	—
Initial value:	0	0	0	0	0	0	0	0	0	0	0	0	0	0	0	0
R/W:	R	R	R	R	R	R	R	R	R	R	R	R	R	R	R	R

Bit:	15	14	13	12	11	10	9	8	7	6	5	4	3	2	1	0
	—	—	—	—	—	—	—	—	—	—	—	—	—	—	—	TCON_DE_INV
Initial value:	0	0	0	0	0	0	0	0	0	0	0	0	0	0	0	0
R/W:	R	R	R	R	R	R	R	R	R	R	R	R	R	R	R	R/W

Bit	Bit Name	Initial Value	R/W	Description
31 to 1	—	All 0	R	Reserved These bits are always read as 0. The write value should always be 0.
0	TCON_DE_INV	0	R/W	Polarity Inversion Control of DE Signal 0: Not inverted 1: Inverted

Note: This register is updated when TCON_VEN in TCON_UPDATE is 1.

chanhvinh.com

36.2.49 Register Update Control Register in Output Controller (OUT_UPDATE)

Bit:	31	30	29	28	27	26	25	24	23	22	21	20	19	18	17	16
	—	—	—	—	—	—	—	—	—	—	—	—	—	—	—	—
Initial value:	0	0	0	0	0	0	0	0	0	0	0	0	0	0	0	0
R/W:	R	R	R	R	R	R	R	R	R	R	R	R	R	R	R	R

Bit:	15	14	13	12	11	10	9	8	7	6	5	4	3	2	1	0
	—	—	—	—	—	—	—	—	—	—	—	—	—	—	—	OUTCNT_VEN
Initial value:	0	0	0	0	0	0	0	0	0	0	0	0	0	0	0	0
R/W:	R	R	R	R	R	R	R	R	R	R	R	R	R	R	R	R/WC1

Bit	Bit Name	Initial Value	R/W	Description
31 to 1	—	All 0	R	Reserved These bits are always read as 0. The write value should always be 0.
0	OUTCNT_VEN	0	R/WC1	Brightness/Contrast, Dither Process, Output Interface Register Update 0: Registers are not updated. 1: Registers are updated at the rising edge of the Vsync.

chanhvinh.com

36.2.50 Output Interface Register (OUT_SET)

Bit:	31	30	29	28	27	26	25	24	23	22	21	20	19	18	17	16
	—	—	—	OUT_ENDIAN_ON	—	—	—	OUT_SWAP_ON	—	—	—	—	—	—	—	—
Initial value:	0	0	0	0	0	0	0	0	0	0	0	1	1	1	1	1
R/W:	R	R	R	R/W	R	R	R	R/W	R	R	R	R	R	R	R	R

Bit:	15	14	13	12	11	10	9	8	7	6	5	4	3	2	1	0
	—	—	OUT_FORMAT[1:0]		—	—	OUT_FRQ_SEL[1:0]		—	—	—	OUT_DIR_SEL	—	—	OUT_PHASE[1:0]	
Initial value:	0	0	0	0	0	0	0	0	0	0	0	0	0	0	0	0
R/W:	R	R	R/W	R/W	R	R	R/W	R/W	R	R	R	R/W	R	R	R/W	R/W

Bit	Bit Name	Initial Value	R/W	Description
31 to 29	—	All 0	R	Reserved These bits are always read as 0. The write value should always be 0.
28	OUT_ENDIAN_ON	0	R/W	Bit Endian Change On/Off Control 0: Off 1: On
27 to 25	—	All 0	R	Reserved These bits are always read as 0. The write value should always be 0.
24	OUT_SWAP_ON	0	R/W	B/R Signal Swap On/Off Control 0: Off 1: On
23 to 21	—	All 0	R	Reserved These bits are always read as 0. The write value should always be 0.
20 to 16	—	All 1	R	Reserved These bits are always read as 1. The write value should always be 1.
15, 14	—	All 0	R	Reserved These bits are always read as 0. The write value should always be 0.

chanhvinh.com

Bit	Bit Name	Initial Value	R/W	Description
13, 12	OUT_FORMAT [1:0]	0	R/W	Output Format Select 0: RBG888 1: RGB666 2: RGB565 3: Serial RGB
11, 10	—	All 0	R	Reserved These bits are always read as 0. The write value should always be 0.
9, 8	OUT_FRQ_ SEL[1:0]	0	R/W	Clock Frequency Control 0: 100% speed — (parallel RGB) 1: Triple speed — (serial RGB) 2: Quadruple speed — (serial RGB) 3: Setting prohibited
7 to 5	—	All 0	R	Reserved These bits are always read as 0. The write value should always be 0.
4	OUT_DIR_SEL	0	R/W	Scan Direction Select 0: Forward scan 1: Reverse scan
3, 2	—	All 0	R	Reserved These bits are always read as 0. The write value should always be 0.

chanhvinh.com

Bit	Bit Name	Initial Value	R/W	Description
1, 0	OUT_PHASE [1:0]	0	R/W	Clock Phase Adjustment During Serial RGB Output Triple speed mode 0: 0 (clk) 1: 1 (clk) 2: 2 (clk) 3: Setting prohibited Quadruple speed mode 0: 0 (clk) 1: 1 (clk) 2: 2 (clk) 3: 3 (clk)

Note: This register is updated when OUTCNT_VEN in OUT_UPDATE is 1.

36.2.51 Brightness (DC) Correction Register 1 (OUT_BRIGHT1)

Bit:	31	30	29	28	27	26	25	24	23	22	21	20	19	18	17	16
	—	—	—	—	—	—	—	—	—	—	—	—	—	—	—	—
Initial value:	0	0	0	0	0	0	0	0	0	0	0	0	0	0	0	0
R/W:	R	R	R	R	R	R	R	R	R	R	R	R	R	R	R	R

Bit:	15	14	13	12	11	10	9	8	7	6	5	4	3	2	1	0
	—	—	—	—	—	—	PBRT_G[9:0]									
Initial value:	0	0	0	0	0	0	1	0	0	0	0	0	0	0	0	0
R/W:	R	R	R	R	R	R	R/W	R/W	R/W	R/W	R/W	R/W	R/W	R/W	R/W	R/W

Bit	Bit Name	Initial Value	R/W	Description
31 to 10	—	All 0	R	Reserved These bits are always read as 0. The write value should always be 0.
9 to 0	PBRT_G[9:0]	512	R/W	Brightness (DC) Adjustment of G Signal Unsigned (0 (-512) to 512 (0) to 1023 (+511) [LSB], 512 [LSB] with offset)

Note: This register is updated when OUTCNT_VEN in OUT_UPDATE is 1.

chanhvinh.com

36.2.52 Brightness (DC) Correction Register 2 (OUT_BRIGHT2)

Bit:	31	30	29	28	27	26	25	24	23	22	21	20	19	18	17	16
	—	—	—	—	—	—	PBRT_B[9:0]									
Initial value:	0	0	0	0	0	0	1	0	0	0	0	0	0	0	0	0
R/W:	R	R	R	R	R	R	R/W	R/W	R/W	R/W	R/W	R/W	R/W	R/W	R/W	R/W

Bit:	15	14	13	12	11	10	9	8	7	6	5	4	3	2	1	0
	—	—	—	—	—	—	PBRT_R[9:0]									
Initial value:	0	0	0	0	0	0	1	0	0	0	0	0	0	0	0	0
R/W:	R	R	R	R	R	R	R/W	R/W	R/W	R/W	R/W	R/W	R/W	R/W	R/W	R/W

Bit	Bit Name	Initial Value	R/W	Description
31 to 26	—	All 0	R	Reserved These bits are always read as 0. The write value should always be 0.
25 to 16	PBRT_B[9:0]	512	R/W	Brightness (DC) Adjustment of B Signal Unsigned (0 (-512) to 512 (0) to 1023 (+511) [LSB], 512 [LSB] with offset)
15 to 10	—	All 0	R	Reserved These bits are always read as 0. The write value should always be 0.
9 to 0	PBRT_R[9:0]	512	R/W	Brightness (DC) Adjustment of R Signal Unsigned (0 (-512) to 512 (0) to 1023 (+511) [LSB], 512 [LSB] with offset)

Note: This register is updated when OUTCNT_VEN in OUT_UPDATE is 1.

chanhvinh.com

36.2.53 Contrast (Gain) Correction Register (OUT_CONTRAST)

Bit:	31	30	29	28	27	26	25	24	23	22	21	20	19	18	17	16
	—	—	—	—	—	—	—	—	CONT_G[7:0]							
Initial value:	0	0	0	0	0	0	0	0	1	0	0	0	0	0	0	0
R/W:	R	R	R	R	R	R	R	R	R/W	R/W	R/W	R/W	R/W	R/W	R/W	R/W

Bit:	15	14	13	12	11	10	9	8	7	6	5	4	3	2	1	0
	CONT_B[7:0]								CONT_R[7:0]							
Initial value:	1	0	0	0	0	0	0	0	1	0	0	0	0	0	0	0
R/W:	R/W	R/W	R/W	R/W	R/W	R/W	R/W	R/W	R/W	R/W	R/W	R/W	R/W	R/W	R/W	R/W

Bit	Bit Name	Initial Value	R/W	Description
31 to 24	—	All 0	R	Reserved These bits are always read as 0. The write value should always be 0.
23 to 16	CONT_G[7:0]	128	R/W	Contrast (Gain) Adjustment of G Signal 0/128 to 255/128 (approx.2 times)
15 to 8	CONT_B[7:0]	128	R/W	Contrast (Gain) Adjustment of B Signal 0/128 to 255/128 (approx.2 times)
7 to 0	CONT_R[7:0]	128	R/W	Contrast (Gain) Adjustment of R Signal 0/128 to 255/128 (approx.2 times)

Note: This register is updated when OUTCNT_VEN in OUT_UPDATE is 1.

chanhvinh.com

36.2.54 Panel Dither Register (OUT_PDTHA)

Bit:	31	30	29	28	27	26	25	24	23	22	21	20	19	18	17	16
	—	—	—	—	—	—	—	—	—	—	PDTH_SEL[1:0]		—	—	PDTH_FORMAT[1:0]	
Initial value:	0	0	0	0	0	0	0	0	0	0	0	0	0	0	0	0
R/W:	R	R	R	R	R	R	R	R	R	R	R/W	R/W	R	R	R/W	R/W

Bit:	15	14	13	12	11	10	9	8	7	6	5	4	3	2	1	0
	—	—	PDTH_PA[1:0]		—	—	PDTH_PB[1:0]		—	—	PDTH_PC[1:0]		—	—	PDTH_PD[1:0]	
Initial value:	0	0	1	1	0	0	0	0	0	0	1	0	0	0	0	1
R/W:	R	R	R/W	R/W	R	R	R/W	R/W	R	R	R/W	R/W	R	R	R/W	R/W

Bit	Bit Name	Initial Value	R/W	Description
31 to 22	—	All 0	R	Reserved These bits are always read as 0. The write value should always be 0.
21, 20	PDTH_SEL [1:0]	0	R/W	Panel Dither Operation Mode 0: Truncate 1: Round-off 2: 2 × 2 pattern dither 3: Random pattern dither
19, 18	—	All 0	R	Reserved These bits are always read as 0. The write value should always be 0.
17, 16	PDTH_ FORMAT[1:0]	0	R/W	Panel Dither Output Format Select 0: RGB888 1: RGB666 2: RGB565 3: Setting prohibited
15, 14	—	All 0	R	Reserved These bits are always read as 0. The write value should always be 0.
13, 12	PDTH_PA [1:0]	3	R/W	Pattern Value (A) of 2 × 2 Pattern Dither Unsigned (0 to 3 [LSB])

chanhvinh.com

Bit	Bit Name	Initial Value	R/W	Description
11, 10	—	All 0	R	Reserved These bits are always read as 0. The write value should always be 0.
9, 8	PDTH_PB [1:0]	0	R/W	Pattern Value (B) of 2 × 2 Pattern Dither Unsigned (0 to 3 [LSB])
7, 6	—	All 0	R	Reserved These bits are always read as 0. The write value should always be 0.
5, 4	PDTH_PC [1:0]	2	R/W	Pattern Value (C) of 2 × 2 Pattern Dither Unsigned (0 to 3 [LSB])
3, 2	—	All 0	R	Reserved These bits are always read as 0. The write value should always be 0.
1, 0	PDTH_PD [1:0]	1	R/W	Pattern Value (D) of 2 × 2 Pattern Dither Unsigned (0 to 3 [LSB])

Note: This register is updated when OUTCNT_VEN in OUT_UPDATE is 1.

chanhvinh.com

36.2.55 Output Phase Control Register (OUT_CLK_PHASE)

Bit:	31	30	29	28	27	26	25	24	23	22	21	20	19	18	17	16
	—	—	—	—	—	—	—	—	—	—	—	—	—	—	—	—
Initial value:	0	0	0	0	0	0	0	0	0	0	0	0	0	0	0	0
R/W:	R	R	R	R	R	R	R	R	R	R	R	R	R	R	R	R

Bit:	15	14	13	12	11	10	9	8	7	6	5	4	3	2	1	0
	—	—	—	OUTCNT_FRONT_GAM	—	—	—	OUTCNT_LCD_EDGE	—	OUTCNT_STVA_EDGE	OUTCNT_STVB_EDGE	OUTCNT_STH_EDGE	OUTCNT_STB_EDGE	OUTCNT_CPV_EDGE	OUTCNT_POLA_EDGE	OUTCNT_POLB_EDGE
Initial value:	0	0	0	0	0	0	0	0	0	0	0	0	0	0	0	0
R/W:	R	R	R	R/W	R	R	R	R/W	R	R/W	R/W	R/W	R/W	R/W	R/W	R/W

Bit	Bit Name	Initial Value	R/W	Description
31 to 13	—	All 0	R	Reserved These bits are always read as 0. The write value should always be 0.
12	OUTCNT_FRONT_GAM	0	R/W	Correction Circuit Sequence Control 0: Brightness → contrast → gamma correction 1: Gamma correction → contrast → brightness
11 to 9	—	All 0	R	Reserved These bits are always read as 0. The write value should always be 0.
8	OUTCNT_LCD_EDGE	0	R/W	Output Phase Control of LCD_DATA23 to LCD_DATA0 Pin 0: Output at the rising edge of LCD_CLK pin 1: Output at the falling edge of LCD_CLK pin
7	—	0	R	Reserved This bit is always read as 0. The write value should always be 0.
6	OUTCNT_STVA_EDGE	0	R/W	Output Phase Control of LCD_TCON0 Pin 0: Output at the rising edge of LCD_CLK pin 1: Output at the falling edge of LCD_CLK pin
5	OUTCNT_STVB_EDGE	0	R/W	Output Phase Control of LCD_TCON1 Pin 0: Output at the rising edge of LCD_CLK pin 1: Output at the falling edge of LCD_CLK pin

chanhvinh.com

Bit	Bit Name	Initial Value	R/W	Description
4	OUTCNT_STH_EDGE	0	R/W	Output Phase Control of LCD_TCON2 Pin 0: Output at the rising edge of LCD_CLK pin 1: Output at the falling edge of LCD_CLK pin
3	OUTCNT_STB_EDGE	0	R/W	Output Phase Control of LCD_TCON3 Pin 0: Output at the rising edge of LCD_CLK pin 1: Output at the falling edge of LCD_CLK pin
2	OUTCNT_CPV_EDGE	0	R/W	Output Phase Control of LCD_TCON4 Pin 0: Output at the rising edge of LCD_CLK pin 1: Output at the falling edge of LCD_CLK pin
1	OUTCNT_POLA_EDGE	0	R/W	Output Phase Control of LCD_TCON5 Pin 0: Output at the rising edge of LCD_CLK pin 1: Output at the falling edge of LCD_CLK pin
0	OUTCNT_POLB_EDGE	0	R/W	Output Phase Control of LCD_TCON6 Pin 0: Output at the rising edge of LCD_CLK pin 1: Output at the falling edge of LCD_CLK pin

Note: This register is updated when OUTCNT_VEN in OUT_UPDATE is 1.

chanhvinh.com

36.3 Usage Methods

36.3.1 Gamma Correction Adjustment Method

The characteristics of G, B, R of each panel to be connected should be measured and gamma correction should be made to suit the panel.

Since the gamma correction adjustment depends on to the characteristics of the panel, there are no recommended setting values.

36.3.2 Dither Usage Method

Dither is used when pseudo contour is appeared on the display screen.

Table 36.26 Dither Settings

Bit Name	Setting Value
PDTH_FORMAT[1:0]	Selects the format. For RGB888: 0 For RGB666: 1 For RGB565: 2
PDTH_SEL[1:0]	When 2x2 pattern dither is to be used: 2
PDTH_PA[1:0]	Normally 3 (initial value)
PDTH_PB[1:0]	Normally 0 (initial value)
PDTH_PC[1:0]	Normally 2 (initial value)
PDTH_PD[1:0]	Normally 1 (initial value)

chanhvinh.com

36.3.3 Output Format Adjustment Method

The setting example of the typical output format is shown in tables 36.27 and 36.28.

It is necessary to carry out the setting of synchronization system signals of each output format similarly as the setting of output after scaling.

Table 36.27 Setting Example of Synchronizing Signal

Register Name	Bit Name	VGA	SVGA	Description
TCON_TIM	TCON_HALF[10:0]	400	528	Sets the half value of 1H time period in clock units.
Vsync signal				
TCON_TIM_STVA1	TCON_STVA_VS[10:0]	0	0	Sets the pulse generation start position from the rising edge of the internal Vsync signal. A 1/2H time period is set as 1.
TCON_TIM_STVA1	TCON_STVA_VW[10:0]	4	8	Sets the changing point from the above pulse generation start position. A 1/2H time period is set as 1.
TCON_TIM_STVA2	TCON_STVA_INV	0	0	Sets the output polarity of the above pulse. For inverted output: 1
TCON_TIM_STVA2	TCON_STVA_SEL[2:0]	0	0	For STVA output selection: 0
Vertical enable signal				
TCON_TIM_STVB1	TCON_STVB_VS[10:0]	68	44	Sets the pulse generation start position from the rising edge of the internal Vsync signal. A 1/2H time period is set as 1.
TCON_TIM_STVB1	TCON_STVB_VW[10:0]	960	1200	Sets the changing point from the above pulse generation start position. A 1/2H time period is set as 1.
TCON_TIM_STVB2	TCON_STVB_INV	0	0	Sets the output polarity of the above pulse. For inverted output: 1
TCON_TIM_STVB2	TCON_STVB_SEL[2:0]	1	1	For STVB output selection: 1

chanhvinh.com

Register Name	Bit Name	VGA	SVGA	Description
Hsync signal				
TCON_TIM_STH1	TCON_STH_HS[10:0]	0	0	Sets the pulse generation start position from the rising edge of the internal Hsync signal.
TCON_TIM_STH1	TCON_STH_HW[10:0]	96	128	Sets the changing point from the above pulse generation start position.
TCON_TIM_STH2	TCON_STH_INV	0	0	Sets the output polarity of the above pulse. For inverted output: 1
TCON_TIM_STH2	TCON_STH_SEL[2:0]	2	2	For STH output selection: 2
Horizontal enable signal				
TCON_TIM_STB1	TCON_STB_HS[10:0]	128	192	Sets the pulse generation start position from the rising edge of the internal Hsync signal.
TCON_TIM_STB1	TCON_STB_HW[10:0]	640	800	Sets the changing point from the above pulse generation start position.
TCON_TIM_STB2	TCON_STB_INV	0	0	Sets the output polarity of the above pulse. For inverted output: 1
TCON_TIM_STB2	TCON_STB_SEL[2:0]	3	3	For STB output selection: 3

chanhvinh.com

Table 36.28 Setting Example of Data System

Register Name	Bit Name	RGB888	RGB ()	Description
OUT_SET	OUT_ENDIAN_ON	0	0	When bit endian is changed: 1
OUT_SET	OUT_SWAP_ON	0	0	When B/R is to be swapped: 1
OUT_SET	OUT_PIXEL_INV_ON	0	0	When the function of reducing number of simultaneous changes is to be used: 1
OUT_SET	OUT_SUM_MOVE[4:0]	31	31	When OUT_PIXEL_INV_ON = 1, this register becomes valid. Sets the simultaneous changing threshold.
OUT_SET	OUT_FORMAT[1:0]	0	3	Sets the output format. For RGB888: 0 For RGB666: 1 For RGB565: 2 For serial RGB: 3
OUT_SET	OUT_FRQ_SEL[1:0]	0	1	Sets the output clock. For RGB888, RGB666, RGB565: 0 For triple speed serial RGB output: 1 For quadruple serial RGB output: 2
OUT_SET	OUT_DIR_SEL	0	0	When data arrangement of the serial RGB output is to be reversed: 1
OUT_SET	OUT_PHASE[1:0]	0	0	Sets when output phase of the serial RGB is shifted. Not delayed Delayed by one clock cycle: 1 Delayed by two clock cycles: 2 Delayed by three clock cycles: 3 (applicable only for quadruple speed mode)

chanhvinh.com

Section 37 Video Display Controller 4 (7): System Controller

37.1 System Controller

37.1.1 Overview of Functions

The system controller provides interrupt control, panel clock control, CLUT table read select signal status flag output functions.

37.1.2 Interrupt Control

Nine interrupt signals are output from the scaler and image synthesizer. The system controller controls whether to output these interrupt signals.

One is written to the corresponding INT_STA* bit when an interrupt signal is to be accepted. After 1 has been written to the bit, however, its value is still read out as 0 until the interrupt signal is accepted. Once the interrupt signal has been accepted, the INT_STA* bit is read out as 1.

The bit for an accepted interrupt signal is cleared by writing 0 to the INT_STA* bit. If further interrupt signals are to be accepted after the INT_STA* bit has been cleared, 1 is again written to the bit.

Table 37.1 Interrupt Signals

Signal Name	Function
VI_VSYNC	Vsync signal before scaling
LO_VSYNC	Vsync signal after scaling
VSYNCERR	Missing Vsync signal for scaling
VLINE	Specified line signal for panel output
VFIELD	Field end signal for recording function
VBUFERR1	Frame buffer write overflow signal
VBUFERR2	Graphics 1 frame buffer read underflow signal
VBUFERR3	Graphics 2 frame buffer read underflow signal
VBUFERR4	Graphics 3 frame buffer read underflow signal

chanhvinh.com

Table 37.2 Interrupt Clear/Hold Settings

Register Name	Bit Name	Initial Value	Description
SYSCNT_INT2	INT_STA0	0	VI_VSYNC Interrupt Clear/Hold 0(W): Clears the interrupt status. 1(W): Starts interrupt acceptance. 0(R): No interrupt has occurred. 1(R): An interrupt has occurred.
SYSCNT_INT2	INT_STA1	0	LO_VSYNC Interrupt Clear/Hold 0(W): Clears the interrupt status. 1(W): Starts interrupt acceptance. 0(R): No interrupt has occurred. 1(R): An interrupt has occurred.
SYSCNT_INT2	INT_STA2	0	VSYNCERR Interrupt Clear/Hold 0(W): Clears the interrupt status. 1(W): Starts interrupt acceptance. 0(R): No interrupt has occurred. 1(R): An interrupt has occurred.
SYSCNT_INT2	INT_STA3	0	VLINE Interrupt Clear/Hold 0(W): Clears the interrupt status. 1(W): Starts interrupt acceptance. 0(R): No interrupt has occurred. 1(R): An interrupt has occurred.
SYSCNT_INT2	INT_STA4	0	VFIELD Interrupt Clear/Hold 0(W): Clears the interrupt status. 1(W): Starts interrupt acceptance. 0(R): No interrupt has occurred. 1(R): An interrupt has occurred.
SYSCNT_INT2	INT_STA5	0	VBUFERR1 Interrupt Clear/Hold 0(W): Clears the interrupt status. 1(W): Starts interrupt acceptance. 0(R): No interrupt has occurred. 1(R): An interrupt has occurred.

chanhvinh.com

Register Name	Bit Name	Initial Value	Description
SYSCNT_INT2	INT_STA6	0	VBUFERR2 Interrupt Clear/Hold 0(W): Clears the interrupt status. 1(W): Starts interrupt acceptance. 0(R): No interrupt has occurred. 1(R): An interrupt has occurred.
SYSCNT_INT2	INT_STA7	0	VBUFERR3 Interrupt Clear/Hold 0(W): Clears the interrupt status. 1(W): Starts interrupt acceptance. 0(R): No interrupt has occurred. 1(R): An interrupt has occurred.
SYSCNT_INT1	INT_STA8	0	VBUFERR4 Interrupt Clear/Hold 0(W): Clears the interrupt status. 1(W): Starts interrupt acceptance. 0(R): No interrupt has occurred. 1(R): An interrupt has occurred.

chanhvinh.com

Table 37.3 Interrupt Output On/Off Settings

Register Name	Bit Name	Initial Value	Description
SYSCNT_INT4	INT_OUT0_ON	0	VI_VSYNC Interrupt Output On/Off 0: Off 1: On
SYSCNT_INT4	INT_OUT1_ON	0	LO_VSYNC Interrupt Output On/Off 0: Off 1: On
SYSCNT_INT4	INT_OUT2_ON	0	VSYNCERR Interrupt Output On/Off 0: Off 1: On
SYSCNT_INT4	INT_OUT3_ON	0	VLINE Interrupt Output On/Off 0: Off 1: On
SYSCNT_INT4	INT_OUT4_ON	0	VFIELD Interrupt Output On/Off 0: Off 1: On
SYSCNT_INT4	INT_OUT5_ON	0	VBUFERR1 Interrupt Output On/Off 0: Off 1: On
SYSCNT_INT4	INT_OUT6_ON	0	VBUFERR2 Interrupt Output On/Off 0: Off 1: On
SYSCNT_INT4	INT_OUT7_ON	0	VBUFERR3 Interrupt Output On/Off 0: Off 1: On
SYSCNT_INT3	INT_OUT8_ON	0	VBUFERR4 Interrupt Output On/Off 0: Off 1: On

chanhvinh.com

37.1.3 Panel Clock Control

The video image clock, external clock, or peripheral clock 1 is selectable as the source of the panel clock for supply to this module. The module is also equipped with a divider for scaling the frequency by factors from 1/1 to 1/32. The bits listed in table 37.4 control the panel clock.

Table 37.4 Panel Clock Control

Register Name	Bit Name	Initial Value	Description
SYSCNT_PANEL_CLK	PANEL_ICKSEL [1:0]	0	Panel Clock Source Select 0: Video image clock (this is VIDEO_X1 if INP_SEL = 0 and DV_CLK if INP_SEL = 0) 1: External clock (LCD_EXTCLK) 2: Peripheral clock 1 (P1ϕ) 3: Setting prohibited
SYSCNT_PANEL_CLK	PANEL_ICKEN	0	Panel Clock Operation Enable 0: Disables operation of the panel clock operation block. 1: Enables operation of the panel clock operation block. Note: Set this bit to 0 before changing the value of the PANEL_ICKSEL or PANEL_DCDR bits.
SYSCNT_PANEL_CLK	PANEL_DCDR [5:0]	1	Clock Frequency Division Ratio Refer to table 37.5 for details on the settings. Note: Settings other than those in table 37.5 are prohibited.

chanhvinh.com

Table 37.5 I/O Clock Frequency and Divisors

		I/O Clock Frequency (MHz)		
DCDR[5:0]	**Clock Ratio**	**27.00**	**54.00**	**66.67*2**
000001*1	1/1	27.00	54.00	66.67
000010	1/2	13.50	27.00	33.33
000011	1/3	9.00	18.00	22.22
000100	1/4	6.75	13.50	16.67
000101	1/5	5.40	10.80	13.33
000110	1/6	4.50	9.00	11.11
000111	1/7	3.86	7.71	9.52
001000	1/8	3.38	6.75	8.33
001001	1/9	3.00	6.00	7.41
001100	1/12	2.25	4.50	5.56
010000	1/16	1.69	3.38	4.17
011000	1/24	1.13	2.25	2.78
100000	1/32	0.84	1.69	2.08

Notes: 1. This setting is prohibited when peripheral clock 1 (P1ϕ) has been selected as the source for supply of the panel clock.

2. This is applicable whether the external clock (LCD_EXTCLK) or peripheral clock 1 (P1ϕ) has been selected as the source for supply of the panel clock.

chanhvinh.com

The panel clock setting procedure is described below.

(1) Specifying 1/7 frequency division

In the initial settings after a power-on reset or after returning from deep-standby, and when changing the input source of the panel clock by means of the INP_SEL bit in the INP_SEL_CNT register of the input control block and the PANEL_ICKSEL[1:0] bits, do not fail to perform the steps below to confirm that the 1/7 clock ratio output is selected for the panel clock.

(a) After specifying the panel clock input source by means of the INP_SEL bit in the INP_SEL_CNT register of the input control block and the PANEL_ICKSEL[1:0] bits, set the PANEL_DCDR[5:0] bits to specify 1/7 as the clock ratio.

(b) Set PANEL_ICKEN to 1.

(c) In the scaling block, set the period of the vertical sync signal.

(d) Set to 1 the TCON_VEN bit in the TCON_UPDATE register of the output control block.

(e) After the vertical sync signal period set in (d) has elapsed, read the TCON_VEN bit.

If the read value is 0, the panel clock is being output correctly and the setting procedure is complete.

If the read value is 1, the panel clock output is fixed at low or high level.

(f) If the output is fixed, initialize video display controller 4 by means of the VDC4SRST bit in the SWRSTCR2 register of the power-down modes, then redo the setting procedure from (a).

(2) Specifying 1/3, 1/4, 1/6, 1/8, 1/12, 1/16, 1/24, or 1/32 frequency division

In the initial settings after a power-on reset or after returning from deep-standby, and when changing the input source of the panel clock by means of the INP_SEL bit in the INP_SEL_CNT register of the input control block and the PANEL_ICKSEL[1:0] bits, do not fail to perform the steps below to confirm that the 1/12 clock ratio output is selected for the panel clock, then specify the desired clock ratio. If the 1/12 clock ratio output is abnormal, output at the desired clock ratio will also be abnormal.

(a) After specifying the panel clock input source by means of the INP_SEL bit in the INP_SEL_CNT register of the input control block and the PANEL_ICKSEL[1:0] bits, set the PANEL_DCDR[5:0] bits to specify 1/12 as the clock ratio.

(b) Set PANEL_ICKEN to 1.

(c) In the scaling block, set the period of the vertical sync signal.

(d) Set to 1 the TCON_VEN bit in the TCON_UPDATE register of the output control block.

(e) After the vertical sync signal period set in (d) has elapsed, read the TCON_VEN bit.

If the read value is 0, set the PANEL_DCDR[5:0] bits to specify the desired clock ratio and complete the setting procedure.

chanhvinh.com

If the read value is 1, the panel clock output is fixed at low or high level.

(f) If the output is fixed, initialize video display controller 4 by means of the VDC4SRST bit in the SWRSTCR2 register of the power-down modes, then redo the setting procedure from (a).

(3) Specifying a frequency division ratio other than the above

There is no need to confirm the division ratio of the panel clock output.

(a) After specifying the panel clock input source by means of the INP_SEL bit in the INP_SEL_CNT register of the input control block and the PANEL_ICKSEL[1:0] bits, set the PANEL_DCDR[5:0] bits to specify the desired clock ratio.

(b) Set PANEL_ICKEN to 1.

37.1.4 CLUT Table Read Select Signal Status Flag

The CLUT read select signal status can be read using the flags shown in table 37.6.

Table 37.6 CLUT Table Read Select Signal Status Flags

Register Name	Bit Name	Initial Value	Description
SYSCNT_CLUT	GR1_CLT_SEL_ST	—	Graphics 1 CLUT Table Read Select Signal Status Flag 0: CLUT table 0 is read out. 1: CLUT table 1 is read out.
SYSCNT_CLUT	GR2_CLT_SEL_ST	—	Graphics 2 CLUT Table Read Select Signal Status Flag 0: CLUT table 0 is read out. 1: CLUT table 1 is read out.
SYSCNT_CLUT	GR3_CLT_SEL_ST	—	Graphics 3 CLUT Table Read Select Signal Status Flag 0: CLUT table 0 is read out. 1: CLUT table 1 is read out.

chanhvinh.com

37.2 Register Descriptions

The following register sets are allocated in the SH register map area.

- Symbols used in Register Descriptions

  Initial value: Register value after a reset
  —: Undefined value
  R/W: Readable/writable. The written value can be read.
  R/WC0: Readable/writable. Writing 0 initializes the bit. Writing 1 is ignored.
  R/WC1: Readable/writable. Writing 1 initializes the bit. Writing 0 is ignored.
  R: Read-only. The write value should always be 0.
  —/W: Write-only. The read value is undefined.

Table 37.7 Register Configuration of System Controller

Register Name	Abbreviation	R/W	Initial Value	Address	Access Size
Interrupt control register 1	SYSCNT_INT1	R/W	H'0000 0000	H'FFFF 7A80	32/16
Interrupt control register 2	SYSCNT_INT2	R/W	H'0000 0000	H'FFFF 7A84	32/16
Interrupt control register 3	SYSCNT_INT3	R/W	H'0000 0000	H'FFFF 7A88	32/16
Interrupt control register 4	SYSCNT_INT4	R/W	H'0000 0000	H'FFFF 7A8C	32/16
Panel clock control register	SYSCNT_PANEL_CLK	R/W	H'0001	H'FFFF 7A90	16
CLUT table read select signal status register	SYSCNT_CLUT	R	H'0000	H'FFFF 7A92	16

chanhvinh.com

37.2.1 Interrupt Control Register 1 (SYSCNT_INT1)

Bit:	31	30	29	28	27	26	25	24	23	22	21	20	19	18	17	16
	—	—	—	—	—	—	—	—	—	—	—	—	—	—	—	—
Initial Value:	0	0	0	0	0	0	0	0	0	0	0	0	0	0	0	0
R/W:	R	R	R	R	R	R	R	R	R	R	R	R	R	R	R	R

Bit:	15	14	13	12	11	10	9	8	7	6	5	4	3	2	1	0
	—	—	—	—	—	—	—	—	—	—	—	—	—	—	—	INT_STA8
Initial Value:	0	0	0	0	0	0	0	0	0	0	0	0	0	0	0	0
R/W:	R	R	R	R	R	R	R	R	R	R	R	R	R	R	R	R/W

Bit	Bit Name	Initial Value	R/W	Description
31 to 1	—	All 0	R	Reserved These bits are always read as 0. The write value should always be 0.
0	INT_STA8	0	R/W	VBUFERR4 Interrupt Clear/Hold 0(W): Clears the interrupt status. 1(W): Starts interrupt acceptance. 0(R): No interrupt has occurred. 1(R): An interrupt has occurred.

chanhvinh.com

37.2.2 Interrupt Control Register 2 (SYSCNT_INT2)

Bit:	31	30	29	28	27	26	25	24	23	22	21	20	19	18	17	16
	—	—	—	INT_STA7	—	—	—	INT_STA6	—	—	—	INT_STA5	—	—	—	INT_STA4
Initial Value:	0	0	0	0	0	0	0	0	0	0	0	0	0	0	0	0
R/W:	R	R	R	R/W	R	R	R	R/W	R	R	R	R/W	R	R	R	R/W

Bit:	15	14	13	12	11	10	9	8	7	6	5	4	3	2	1	0
	—	—	—	INT_STA3	—	—	—	INT_STA2	—	—	—	INT_STA1	—	—	—	INT_STA0
Initial Value:	0	0	0	0	0	0	0	0	0	0	0	0	0	0	0	0
R/W:	R	R	R	R/W	R	R	R	R/W	R	R	R	R/W	R	R	R	R/W

Bit	Bit Name	Initial Value	R/W	Description
31 to 29	—	All 0	R	Reserved These bits are always read as 0. The write value should always be 0.
28	INT_STA7	0	R/W	VBUFERR3 Interrupt Clear/Hold 0(W): Clears the interrupt status. 1(W): Starts interrupt acceptance. 0(R): No interrupt has occurred. 1(R): An interrupt has occurred.
27 to 25	—	All 0	R	Reserved These bits are always read as 0. The write value should always be 0.
24	INT_STA6	0	R/W	VBUFERR2 Interrupt Clear/Hold 0(W): Clears the interrupt status. 1(W): Starts interrupt acceptance. 0(R): No interrupt has occurred. 1(R): An interrupt has occurred.
23 to 21	—	All 0	R	Reserved These bits are always read as 0. The write value should always be 0.
20	INT_STA5	0	R/W	VBUFERR1 Interrupt Clear/Hold 0(W): Clears the interrupt status. 1(W): Starts interrupt acceptance. 0(R): No interrupt has occurred. 1(R): An interrupt has occurred.

chanhvinh.com

Bit	Bit Name	Initial Value	R/W	Description
19 to 17	—	All 0	R	Reserved These bits are always read as 0. The write value should always be 0.
16	INT_STA4	0	R/W	VFIELD Interrupt Clear/Hold 0(W): Clears the interrupt status. 1(W): Starts interrupt acceptance. 0(R): No interrupt has occurred. 1(R): An interrupt has occurred.
15 to 13	—	All 0	R	Reserved These bits are always read as 0. The write value should always be 0.
12	INT_STA3	0	R/W	VLINE Interrupt Clear/Hold 0(W): Clears the interrupt status. 1(W): Starts interrupt acceptance. 0(R): No interrupt has occurred. 1(R): An interrupt has occurred.
11 to 9	—	All 0	R	Reserved These bits are always read as 0. The write value should always be 0.
8	INT_STA2	0	R/W	VSYNCERR Interrupt Clear/Hold 0(W): Clears the interrupt status. 1(W): Starts interrupt acceptance. 0(R): No interrupt has occurred. 1(R): An interrupt has occurred.
7 to 5	—	All 0	R	Reserved These bits are always read as 0. The write value should always be 0.
4	INT_STA1	0	R/W	LO_VSYNC Interrupt Clear/Hold 0(W): Clears the interrupt status. 1(W): Starts interrupt acceptance. 0(R): No interrupt has occurred. 1(R): An interrupt has occurred.

chanhvinh.com

Bit	Bit Name	Initial Value	R/W	Description
3 to 1	—	All 0	R	Reserved These bits are always read as 0. The write value should always be 0.
0	INT_STA0	0	R/W	VI_VSYNC Interrupt Clear/Hold 0(W): Clears the interrupt status. 1(W): Starts interrupt acceptance. 0(R): No interrupt has occurred. 1(R): An interrupt has occurred.

chanhvinh.com

37.2.3 Interrupt Control Register 3 (SYSCNT_INT3)

Bit:	31	30	29	28	27	26	25	24	23	22	21	20	19	18	17	16
	—	—	—	—	—	—	—	—	—	—	—	—	—	—	—	—
Initial Value:	0	0	0	0	0	0	0	0	0	0	0	0	0	0	0	0
R/W:	R	R	R	R	R	R	R	R	R	R	R	R	R	R	R	R

Bit:	15	14	13	12	11	10	9	8	7	6	5	4	3	2	1	0
	—	—	—	—	—	—	—	—	—	—	—	—	—	—	—	INT_OUT8_ON
Initial Value:	0	0	0	0	0	0	0	0	0	0	0	0	0	0	0	0
R/W:	R	R	R	R	R	R	R	R	R	R	R	R	R	R	R	R/W

Bit	Bit Name	Initial Value	R/W	Description
31 to 1	—	All 0	R	Reserved These bits are always read as 0. The write value should always be 0.
0	INT_OUT8_ON	0	R/W	VBUFERR4 Interrupt Output On/Off 0: Off 1: On

chanhvinh.com

37.2.4 Interrupt Control Register 4 (SYSCNT_INT4)

Bit:	31	30	29	28	27	26	25	24	23	22	21	20	19	18	17	16
	—	—	—	INT_OUT7_ON	—	—	—	INT_OUT6_ON	—	—	—	INT_OUT5_ON	—	—	—	INT_OUT4_ON
Initial Value:	0	0	0	0	0	0	0	0	0	0	0	0	0	0	0	0
R/W:	R	R	R	R/W	R	R	R	R/W	R	R	R	R/W	R	R	R	R/W

Bit:	15	14	13	12	11	10	9	8	7	6	5	4	3	2	1	0
	—	—	—	INT_OUT3_ON	—	—	—	INT_OUT2_ON	—	—	—	INT_OUT1_ON	—	—	—	INT_OUT0_ON
Initial Value:	0	0	0	0	0	0	0	0	0	0	0	0	0	0	0	0
R/W:	R	R	R	R/W	R	R	R	R/W	R	R	R	R/W	R	R	R	R/W

Bit	Bit Name	Initial Value	R/W	Description
31 to 29	—	All 0	R	Reserved These bits are always read as 0. The write value should always be 0.
28	INT_OUT7_ON	0	R/W	VBUFERR3 Interrupt Output On/Off 0: Off 1: On
27 to 25	—	All 0	R	Reserved These bits are always read as 0. The write value should always be 0.
24	INT_OUT6_ON	0	R/W	VBUFERR2 Interrupt Output On/Off 0: Off 1: On
23 to 21	—	All 0	R	Reserved These bits are always read as 0. The write value should always be 0.
20	INT_OUT5_ON	0	R/W	VBUFERR1 Interrupt Output On/Off 0: Off 1: On

chanhvinh.com

Bit	Bit Name	Initial Value	R/W	Description
19 to 17	—	All 0	R	Reserved These bits are always read as 0. The write value should always be 0.
16	INT_OUT4_ON	0	R/W	VFIELD Interrupt Output On/Off 0: Off 1: On
15 to 13	—	All 0	R	Reserved These bits are always read as 0. The write value should always be 0.
12	INT_OUT3_ON	0	R/W	VLINE Interrupt Output On/Off 0: Off 1: On
11 to 9	—	All 0	R	Reserved These bits are always read as 0. The write value should always be 0.
8	INT_OUT2_ON	0	R/W	VSYNCERR Interrupt Output On/Off 0: Off 1: On
7 to 5	—	All 0	R	Reserved These bits are always read as 0. The write value should always be 0.
4	INT_OUT1_ON	0	R/W	LO_VSYNC Interrupt Output On/Off 0: Off 1: On
3 to 1	—	All 0	R	Reserved These bits are always read as 0. The write value should always be 0.
0	INT_OUT0_ON	0	R/W	VI_VSYNC Interrupt Output On/Off 0: Off 1: On

chanhvinh.com

37.2.5 Panel Clock Control Register (SYSCNT_PANEL_CLK)

Bit:	15	14	13	12	11	10	9	8	7	6	5	4	3	2	1	0
	—	—	PANEL_ICKSEL[1:0]		—	—	—	PANEL_ICKEN	—	—	PANEL_DCDR[5:0]					
Initial Value:	0	0	0	0	0	0	0	0	0	0	0	0	0	0	0	1
R/W:	R	R	R/W	R/W	R	R	R	R/W	R	R	R/W	R/W	R/W	R/W	R/W	R/W

Bit	Bit Name	Initial Value	R/W	Description
15, 14	—	All 0	R	Reserved These bits are always read as 0. The write value should always be 0.
13, 12	PANEL_ICKSEL[1:0]	All 0	R/W	Panel Clock Source Select 0: Video image clock (this is VIDEO_X1 if INP_SEL = 0 and DV_CLK if INP_SEL = 0) 1: External clock (LCD_EXTCLK) 2: Peripheral clock 1 (P1ϕ) 3: Setting prohibited
11 to 9	—	All 0	R	Reserved These bits are always read as 0. The write value should always be 0.
8	PANEL_ICKEN	0	R/W	Panel Clock Operation Enable 0: Disables operation of the panel clock operation block. 1: Enables operation of the panel clock operation block. Note: Set this bit to 0 before changing the value of the PANEL_ICKSEL or PANEL_DCDR bits.
7, 6	—	All 0	R	Reserved These bits are always read as 0. The write value should always be 0.
5 to 0	PANEL_DCDR[5:0]	1	R/W	Clock Frequency Division Ratio Refer to table 37.5 for details on the settings. Note: Settings other than those in table 37.5 are prohibited.

chanhvinh.com

37.2.6 CLUT Table Read Select Signal Status Register (SYSCNT_CLUT)

Bit:	15	14	13	12	11	10	9	8	7	6	5	4	3	2	1	0
	—	—	—	—	—	—	—	GR3_CLT_SEL_ST	—	—	—	GR2_CLT_SEL_ST	—	—	—	GR1_CLT_SEL_ST
Initial Value:	0	0	0	0	0	0	0	0	0	0	0	0	0	0	0	0
R/W:	R	R	R	R	R	R	R	R	R	R	R	R	R	R	R	R

Bit	Bit Name	Initial Value	R/W	Description
15 to 9	—	All 0	R	Reserved These bits are always read as 0. The write value should always be 0.
8	GR3_CLT_SEL_ST	—	R	Graphics 3 CLUT Table Read Select Signal Status Flag 0: CLUT table 0 is read out. 1: CLUT table 1 is read out.
7 to 5	—	All 0	R	Reserved These bits are always read as 0. The write value should always be 0.
4	GR2_CLT_SEL_ST	—	R	Graphics 2 CLUT Table Read Select Signal Status Flag 0: CLUT table 0 is read out. 1: CLUT table 1 is read out.
3 to 1	—	All 0	R	Reserved These bits are always read as 0. The write value should always be 0.
0	GR1_CLT_SEL_ST	—	R	Graphics 1 CLUT Table Read Select Signal Status Flag 0: CLUT table 0 is read out. 1: CLUT table 1 is read out.

chanhvinh.com

Section 38 Image Renderer (IMR-LS)

Renesas Electronics Corporation is only able to provide information contained in this section to parties with which we have concluded a nondisclosure agreement. Please contact one of our sales representatives for details.

chanhvinh.com

chanhvinh.com
chanhvinh.com
chanhvinh.com

chanhvinh.com

Section 39 Display Out Comparison Unit

The display out comparison unit checks whether the data output from the graphics display module* agrees with the expected graphics data. This checking is accomplished by comparing the CRC code of the data output from the graphics display module with the pre-calculated CRC code of the expected graphics data.

Note: * This indicates video display controller 4 in this LSI.

39.1 Features

This module has the following features.

- Comparison of Graphics Planes of Graphics Display Module

  One of the graphics planes of the graphics display module can be selected and its CRC code can be compared with the expected CRC code.
- Comparison of Data after α Blending

  The CRC code of the graphics data obtained after α blending in the graphics display module can be compared with the expected CRC code.
- Rectangular Area Specification

  The rectangular area can be specified based on the graphics data output from the graphics display module (graphics plane or graphics data obtained after α blending) and its CRC code can be compared with the expected CRC code.
- Pixel Format

  A pixel format for 32 bits/pixel or 16 bits/pixel can be selected.

  ARGB8888/RGB888 are available for 32 bits/pixel, and only RGB565 is available for 16 bits/pixel.

chanhvinh.com

39.2 Block Diagram

An overall block diagram of this module is shown in figure 39.1.

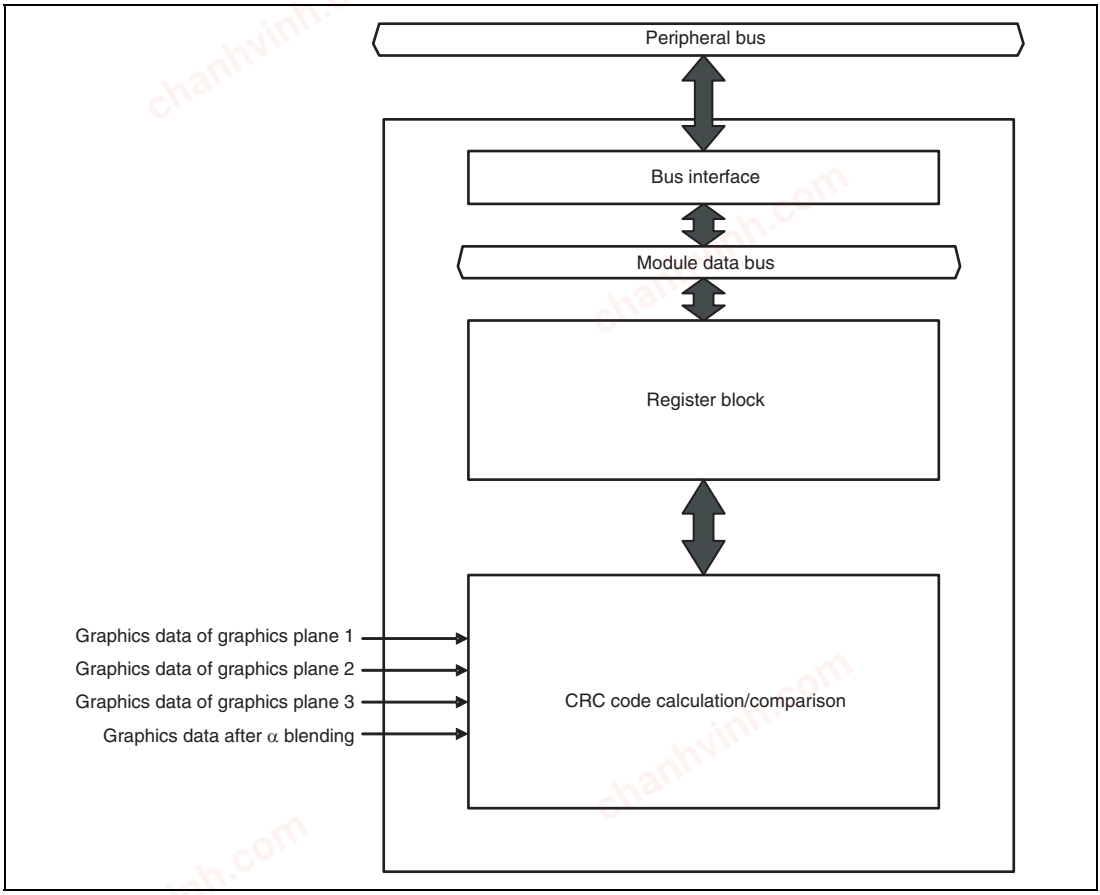

Figure 39.1 Block Diagram

chanhvinh.com

39.3 Register Descriptions

Table 39.1 shows the register configuration.

Table 39.1 Register Configuration

Register Name	Abbreviation	R/W	Address	Access Size
Control register	DOCMCR	R/W	H'FFFFA800	32
Status register	DOCMSTR	R	H'FFFFA804	32
Status clear register	DOCMCLSTR	R/W	H'FFFFA808	32
Interrupt enable register	DOCMIENR	R/W	H'FFFFA80C	32
Operation parameter setting register	DOCMPMR	R/W	H'FFFFA814	32
Expected CRC code register	DOCMECRCR	R/W	H'FFFFA818	32
Calculated CRC code value register	DOCMCCRCR	R	H'FFFFA81C	32
Horizontal start position setting register	DOCMSPXR	R/W	H'FFFFA820	32
Vertical start position setting register	DOCMSPYR	R/W	H'FFFFA824	32
Horizontal size setting register	DOCMSZXR	R/W	H'FFFFA828	32
Vertical size setting register	DOCMSZYR	R/W	H'FFFFA82C	32
CRC code initialization register	DOCMCRCIR	R/W	H'FFFFA830	32

chanhvinh.com

39.3.1 Control Register (DOCMCR)

DOCMCR turns CRC code comparison on or off.

Bit:	31	30	29	28	27	26	25	24	23	22	21	20	19	18	17	16
	-	-	-	-	-	-	-	-	-	-	-	-	-	-	-	CMPRU
Initial value:	0	0	0	0	0	0	0	0	0	0	0	0	0	0	0	0
R/W:	R	R	R	R	R	R	R	R	R	R	R	R	R	R	R	R

Bit:	15	14	13	12	11	10	9	8	7	6	5	4	3	2	1	0
	-	-	-	-	-	-	-	-	-	-	-	-	-	-	-	CMPR
Initial value:	0	0	0	0	0	0	0	0	0	0	0	0	0	0	0	0
R/W:	R	R	R	R	R	R	R	R	R	R	R	R	R	R	R	R/W

Bit	Bit Name	Initial Value	R/W	Description
31 to 17	—	All 0	R	Reserved These bits are always read as 0. The write value should always be 0.
16	CMPRU	0	R	Display Out Comparison Update Value Reflects the internal update of the CMPR bit. It should be checked that this bit is 0 before updating the registers other than the CMPR bit in DOCMCR, DOCMCLSTR, and DOCMIENR. For details, see section 39.4.8, Register Update Timing.
15 to 1	—	All 0	R	Reserved These bits are always read as 0. The write value should always be 0.
0	CMPR	0	R/W	Display Out Comparison Execution Executes display out comparison. This bit is loaded inside when the start of the valid period of the graphics data is detected. For details, see section 39.4.8, Register Update Timing. 0: Stops display out comparison. 1: Executes display out comparison.

chanhvinh.com

39.3.2 Status Register (DOCMSTR)

DOCMSTR returns the comparison result of the CRC code. The result is reflected in this register when the end of the valid period of the graphics data is detected.

Bit:	31	30	29	28	27	26	25	24	23	22	21	20	19	18	17	16
	-	-	-	-	-	-	-	-	-	-	-	-	-	-	-	-
Initial value:	0	0	0	0	0	0	0	0	0	0	0	0	0	0	0	0
R/W:	R	R	R	R	R	R	R	R	R	R	R	R	R	R	R	R

Bit:	15	14	13	12	11	10	9	8	7	6	5	4	3	2	1	0
	-	-	-	-	-	-	-	-	-	-	-	-	-	-	-	CMPST
Initial value:	0	0	0	0	0	0	0	0	0	0	0	0	0	0	0	0
R/W:	R	R	R	R	R	R	R	R	R	R	R	R	R	R	R	R

Bit	Bit Name	Initial Value	R/W	Description
31, 30	—	All 0	R	Reserved Values read from these bits are undefined. The write value should always be 0.
29 to 1	—	All 0	R	Reserved These bits are always read as 0. The write value should always be 0.
0	CMPST	0	R/W	Display Out Comparison Status 0: Compared CRC codes match. 1: Compared CRC codes do not match.

chanhvinh.com

39.3.3 Status Clear Register (DOCMCLSTR)

Writing 1 to the CMPCLST bit causes clearing of the CMPST bit in DOCMSTR to 0. However, clearing of the CMPST bit in DOCMSTR after 1 is written to the CMPCLST bit takes a fixed amount of time. Confirm that the CMPST bit in DOCMSTR is actually clear after writing 1 to the CMPCLST bit.

Bit:	31	30	29	28	27	26	25	24	23	22	21	20	19	18	17	16
	-	-	-	-	-	-	-	-	-	-	-	-	-	-	-	-
Initial value:	0	0	0	0	0	0	0	0	0	0	0	0	0	0	0	0
R/W:	R	R	R	R	R	R	R	R	R	R	R	R	R	R	R	R

Bit:	15	14	13	12	11	10	9	8	7	6	5	4	3	2	1	0
	-	-	-	-	-	-	-	-	-	-	-	-	-	-	-	CMP CLST
Initial value:	0	0	0	0	0	0	0	0	0	0	0	0	0	0	0	0
R/W:	R	R	R	R	R	R	R	R	R	R	R	R	R	R	R	R/W

Bit	Bit Name	Initial Value	R/W	Description
31 to 1	—	All 0	R	Reserved These bits are always read as 0. The write value should always be 0.
0	CMPCLST	0	R/W	Display Out Comparison Status Clear Setting this bit to 1 clears the CMPST bit in DOCMSTR to 0. This bit is always read as 0.

chanhvinh.com

39.3.4 Interrupt Enable Register (DOCMIENR)

DOCMIENR enables interrupt of the corresponding status bits in DOCMSTR.

Bit:	31	30	29	28	27	26	25	24	23	22	21	20	19	18	17	16
	-	-	-	-	-	-	-	-	-	-	-	-	-	-	-	-
Initial value:	0	0	0	0	0	0	0	0	0	0	0	0	0	0	0	0
R/W:	R	R	R	R	R	R	R	R	R	R	R	R	R	R	R	R

Bit:	15	14	13	12	11	10	9	8	7	6	5	4	3	2	1	0
	-	-	-	-	-	-	-	-	-	-	-	-	-	-	-	CMPIEN
Initial value:	0	0	0	0	0	0	0	0	0	0	0	0	0	0	0	0
R/W:	R	R	R	R	R	R	R	R	R	R	R	R	R	R	R	R/W

Bit	Bit Name	Initial Value	R/W	Description
31 to 1	—	All 0	R	Reserved These bits are always read as 0. The write value should always be 0.
0	CMPIEN	0	R/W	Display Out Comparison Mismatch Detection Interrupt Enable Enables/disables the display out comparison mismatch detection interrupt (CMPI) when the CMPST bit in DOCMSTR is set to 1. 0: Disables the display out comparison mismatch detection interrupt (CMPI). 1: Enables the display out comparison mismatch detection interrupt (CMPI).

chanhvinh.com

39.3.5 Operation Parameter Setting Register (DOCMPMR)

DOCMPMR selects the graphics data and sets the pixel format.

Bit:	31	30	29	28	27	26	25	24	23	22	21	20	19	18	17	16
	-	-	-	-	-	-	-	-	-	-	-	-	-	-	-	CMPBT
Initial value:	0	0	0	0	0	0	0	0	0	0	0	0	0	0	0	0
R/W:	R	R	R	R	R	R	R	R	R	R	R	R	R	R	R	R/W

Bit:	15	14	13	12	11	10	9	8	7	6	5	4	3	2	1	0
	CMPDFA[7:0]								CMP DAUF	-	-	-	CMPSELP[3:0]			
Initial value:	0	0	0	0	0	0	0	0	0	0	0	0	0	0	0	0
R/W:	R/W	R/W	R/W	R/W	R/W	R/W	R/W	R/W	R/W	R	R	R	R/W	R/W	R/W	R/W

Bit	Bit Name	Initial Value	R/W	Description
31 to 17	—	All 0	R	Reserved These bits are always read as 0. The write value should always be 0.
16	CMPBT	0	R/W	Pixel Format Data Width Specifies the data width of the pixel format. 0: 32 bits/pixel (ARGB8888/RGB888 format) 1: 16 bits/pixel (RGB565 format)
15 to 8	CMPDFA [7:0]	H'00	R/W	Display Out Comparison Default α Value Sets the default α value. This bit is enabled when the CMPDAUF bit is 1.
7	CMPDAUF	0	R/W	Display Out Comparison Default α Value Use Enables the use of default α value. 0: Disables use of default α value. 1: Enables use of default α value. Note: This bit is enabled only if RGB888 format is selected. For ARGB8888/RGB565 format, this bit should always be set to 0. When this bit is set to 0 when RGB888/RGB666 pixel format is selected, the data output from the graphics display module is used as the α value.

chanhvinh.com

Bit	Bit Name	Initial Value	R/W	Description
6 to 4	—	All 0	R	Reserved These bits are always read as 0. The write value should always be 0.
3 to 0	CMPSELP [3:0]	0000	R/W	Display Out Comparison Selection Plane Selects the graphics data for CRC code comparison. 0: Selects no data. 1 to 3: Selects graphics data of graphics plane 1 to graphics plane 3. 9: Selects graphics data after α blending. Other than above: Setting prohibited

chanhvinh.com

39.3.6 Expected CRC Code Register (DOCMECRCR)

DOCMECRCR specifies the CRC code of the expected graphics data.

Bit:	31	30	29	28	27	26	25	24	23	22	21	20	19	18	17	16
	CMPECRC[31:16]															
Initial value:	0	0	0	0	0	0	0	0	0	0	0	0	0	0	0	0
R/W:	R/W	R/W	R/W	R/W	R/W	R/W	R/W	R/W	R/W	R/W	R/W	R/W	R/W	R/W	R/W	R/W

Bit:	15	14	13	12	11	10	9	8	7	6	5	4	3	2	1	0
	CMPECRC[15:0]															
Initial value:	0	0	0	0	0	0	0	0	0	0	0	0	0	0	0	0
R/W:	R/W	R/W	R/W	R/W	R/W	R/W	R/W	R/W	R/W	R/W	R/W	R/W	R/W	R/W	R/W	R/W

Bit	Bit Name	Initial Value	R/W	Description
31 to 0	CMPECRC [31:0]	H'00000000	R/W	Expected Display Out Comparison CRC Code The expected CRC code value of the selected graphics data or rectangular area

39.3.7 Calculated CRC Code Value Register (DOCMCCRCR)

The CRC code calculation result of the selected graphics plane or rectangular area can be read from this register. The calculation result is reflected in this register when the end of the valid period of the graphics data is detected.

Bit:	31	30	29	28	27	26	25	24	23	22	21	20	19	18	17	16
	CMPCCRC[31:16]															
Initial value:	0	0	0	0	0	0	0	0	0	0	0	0	0	0	0	0
R/W:	R	R	R	R	R	R	R	R	R	R	R	R	R	R	R	R

Bit:	15	14	13	12	11	10	9	8	7	6	5	4	3	2	1	0
	CMPCCRC[15:0]															
Initial value:	0	0	0	0	0	0	0	0	0	0	0	0	0	0	0	0
R/W:	R	R	R	R	R	R	R	R	R	R	R	R	R	R	R	R

Bit	Bit Name	Initial Value	R/W	Description
31 to 0	CMPCCRC [31:0]	H'00000000	R	Calculated Display Out Comparison CRC Code Value The calculated CRC code value of the selected graphics data or rectangular area

chanhvinh.com

39.3.8 Horizontal Start Position Setting Register (DOCMSPXR)

DOCMSPXR specifies the horizontal start position of the rectangular area for which the CRC code is calculated.

Bit:	31	30	29	28	27	26	25	24	23	22	21	20	19	18	17	16
	-	-	-	-	-	-	-	-	-	-	-	-	-	-	-	-
Initial value:	0	0	0	0	0	0	0	0	0	0	0	0	0	0	0	0
R/W:	R	R	R	R	R	R	R	R	R	R	R	R	R	R	R	R

Bit:	15	14	13	12	11	10	9	8	7	6	5	4	3	2	1	0
	-	-	-	-	-	CMPSPX[10:0]										
Initial value:	0	0	0	0	0	0	0	0	0	0	0	0	0	0	0	0
R/W:	R	R	R	R	R	R/W	R/W	R/W	R/W	R/W	R/W	R/W	R/W	R/W	R/W	R/W

Bit	Bit Name	Initial Value	R/W	Description
31 to 11	—	All 0	R	Reserved These bits are always read as 0. The write value should always be 0.
10 to 0	CMPSPX [10:0]	H'000	R/W	Display Out Comparison Horizontal Start Position Specifies the horizontal start position of the rectangular area for which the CRC code is calculated. The set value should be smaller than or equal to the horizontal size of the graphics data.

chanhvinh.com

39.3.9 Vertical Start Position Setting Register (DOCMSPYR)

DOCMSPYR specifies the vertical start position of the rectangular area for which the CRC code is calculated.

Bit:	31	30	29	28	27	26	25	24	23	22	21	20	19	18	17	16
	-	-	-	-	-	-	-	-	-	-	-	-	-	-	-	-
Initial value:	0	0	0	0	0	0	0	0	0	0	0	0	0	0	0	0
R/W:	R	R	R	R	R	R	R	R	R	R	R	R	R	R	R	R

Bit:	15	14	13	12	11	10	9	8	7	6	5	4	3	2	1	0
	-	-	-	-	-	CMPSPY[10:0]										
Initial value:	0	0	0	0	0	0	0	0	0	0	0	0	0	0	0	0
R/W:	R	R	R	R	R	R/W	R/W	R/W	R/W	R/W	R/W	R/W	R/W	R/W	R/W	R/W

Bit	Bit Name	Initial Value	R/W	Description
31 to 11	—	All 0	R	Reserved These bits are always read as 0. The write value should always be 0.
10 to 0	CMPSPY [10:0]	H'000	R/W	Display Out Comparison Vertical Start Position Specifies the vertical start position of the rectangular area for which the CRC code is calculated. The set value should be smaller than or equal to the vertical size of the graphics data.

chanhvinh.com

39.3.10 Horizontal Size Setting Register (DOCMSZXR)

DOCMSZXR specifies the horizontal size of the rectangular area for which the CRC code is calculated.

Bit:	31	30	29	28	27	26	25	24	23	22	21	20	19	18	17	16
	-	-	-	-	-	-	-	-	-	-	-	-	-	-	-	-
Initial value:	0	0	0	0	0	0	0	0	0	0	0	0	0	0	0	0
R/W:	R	R	R	R	R	R	R	R	R	R	R	R	R	R	R	R

Bit:	15	14	13	12	11	10	9	8	7	6	5	4	3	2	1	0
	-	-	-	-	-	CMPSZX[10:0]										
Initial value:	0	0	0	0	0	0	0	0	0	0	0	0	0	0	0	0
R/W:	R	R	R	R	R	R/W	R/W	R/W	R/W	R/W	R/W	R/W	R/W	R/W	R/W	R/W

Bit	Bit Name	Initial Value	R/W	Description
31 to 11	—	All 0	R	Reserved These bits are always read as 0. The write value should always be 0.
10 to 0	CMPSZX [10:0]	H'000	R/W	Display Out Comparison Horizontal Size Specifies the horizontal size of the rectangular area for which the CRC code is calculated. The value should be set as follows: Horizontal size of the graphics data ≥ Horizontal start position (CMPSPX) + Horizontal size (CMPSZX).

chanhvinh.com

39.3.11 Vertical Size Setting Register (DOCMSZYR)

DOCMSZYR specifies the vertical size of the rectangular area for which the CRC code is calculated.

Bit:	31	30	29	28	27	26	25	24	23	22	21	20	19	18	17	16
	-	-	-	-	-	-	-	-	-	-	-	-	-	-	-	-
Initial value:	0	0	0	0	0	0	0	0	0	0	0	0	0	0	0	0
R/W:	R	R	R	R	R	R	R	R	R	R	R	R	R	R	R	R

Bit:	15	14	13	12	11	10	9	8	7	6	5	4	3	2	1	0
	-	-	-	-	-	CMPSZY[10:0]										
Initial value:	0	0	0	0	0	0	0	0	0	0	0	0	0	0	0	0
R/W:	R	R	R	R	R	R/W	R/W	R/W	R/W	R/W	R/W	R/W	R/W	R/W	R/W	R/W

Bit	Bit Name	Initial Value	R/W	Description
31 to 11	—	All 0	R	Reserved These bits are always read as 0. The write value should always be 0.
10 to 0	CMPSZY [10:0]	H'000	R/W	Display Out Comparison Vertical Size Specifies the vertical size of the rectangular area for which the CRC code is calculated. The value should be set as follows: Vertical size of the graphics data ≥ Vertical start position (CMPSPY) + Vertical size (CMPSZY).

chanhvinh.com

39.3.12 CRC Code Initialization Register (DOCMCRCIR)

DOCMCRCIR is used to specify the initial value of the CRC code.

Bit:	31	30	29	28	27	26	25	24	23	22	21	20	19	18	17	16
	CRCINI[31:16]															
Initial value:	1	1	1	1	1	1	1	1	1	1	1	1	1	1	1	1
R/W:	R/W	R/W	R/W	R/W	R/W	R/W	R/W	R/W	R/W	R/W	R/W	R/W	R/W	R/W	R/W	R/W

Bit:	15	14	13	12	11	10	9	8	7	6	5	4	3	2	1	0
	CRCINI[15:0]															
Initial value:	1	1	1	1	1	1	1	1	1	1	1	1	1	1	1	1
R/W:	R/W	R/W	R/W	R/W	R/W	R/W	R/W	R/W	R/W	R/W	R/W	R/W	R/W	R/W	R/W	R/W

Bit	Bit Name	Initial Value	R/W	Description
31 to 0	CRCINI [31:0]	H'FFFFFFFF	R/W	Display Output CRC Comparison Initial Value These bits specify the initial value of the CRC for the rectangular region of the selected graphics data.

chanhvinh.com

39.4 Operation

39.4.1 Overview of Operations

This module is capable of calculating the CRC code of the arbitrary rectangular area of graphics data. By comparing the CRC code with the pre-calculated expected CRC code value, this module can detect whether the display output is obtained as expected.

Main features of this module are as follows.

- Graphics data can be selected from graphics plane 1 to graphics plane 3
- Graphics data after α blending can be selected
- Arbitrary rectangular area of the selected graphics data can be specified
- Pixel format can be selected from ARGB88888 and RGB888 for 32 bits/pixel or RGB565 for 16 bits/pixel
- Interrupt is generated when the compared CRC codes do not match.

39.4.2 System Configuration

This module is configured as shown in figure 39.2.

The CRC code is calculated after receiving the graphics data output from the graphics display module. The calculated CRC code is then compared with the pre-calculated expected CRC code value. The graphics data can be selected from graphics plane 1 to graphics plane 3, and the data after α blending.

chanhvinh.com

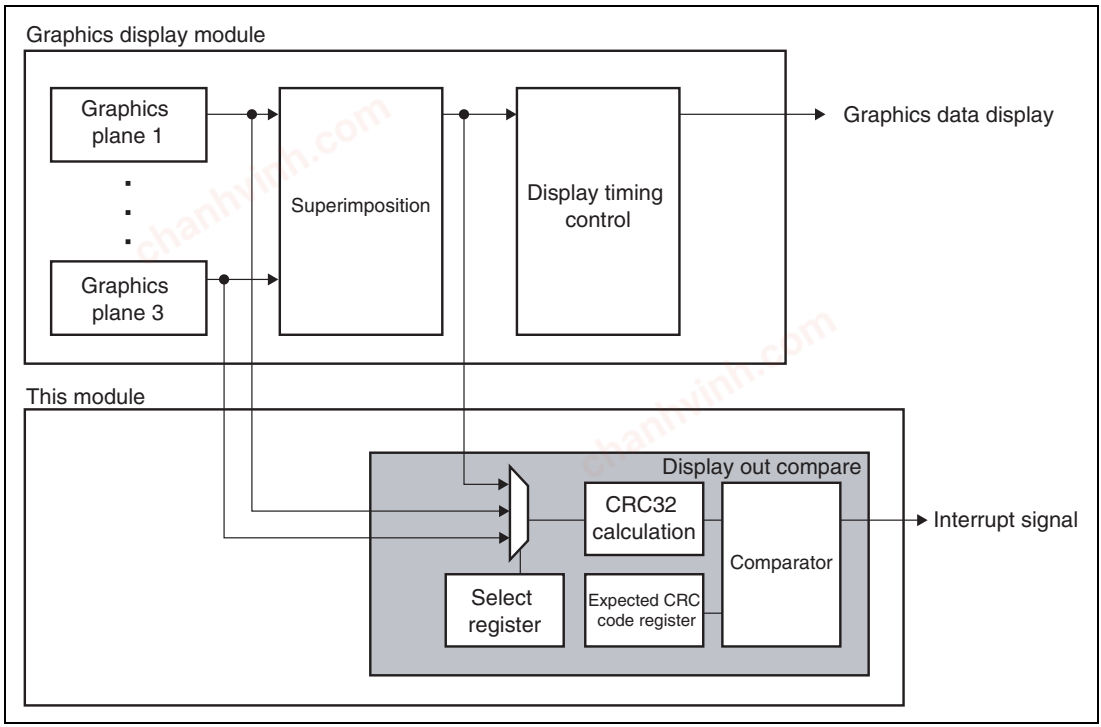

Figure 39.2 System Configuration

39.4.3 CRC Calculation Method

The display out comparison unit generates a 32-bit CRC code by using the following CRC polynomial (IEEE802.3).

$$x^{32}+x^{26}+x^{23}+x^{22}+x^{16}+x^{12}+x^{11}+x^{10}+x^{8}+x^{7}+x^{5}+x^{4}+x^{2}+x+1$$

CRC is sequentially calculated beginning with LSB in pixel units.

In other words, for 32 bits/pixel, it is calculated in units of 32 bits and for 16 bits/pixel, it is calculated in units of 16 bits. During CRC calculation of data, pixel data is input when the graphics data is output (top left to bottom right).

39.4.4 Graphics Data Selection for CRC Code Generation

The graphics data for which the CRC code is calculated can be selected from the graphics plane 1 to graphics plane 3 or the graphics data after α blending by setting the CMPSELP[3:0] bits in DOCMPMR.

chanhvinh.com

39.4.5 Pixel Format

(1) Pixel Format Specification

DOCMPMR specifies the pixel format. The pixel formats are given in table 39.2.

Table 39.2 Pixel Format

Bits in DOCMPMR		CMDBT	CMPDFA	CMPDAUF[7:0]
32 bits/pixel	ARGB8888	0	—	—
	RGB888		Arbitrary	Arbitrary
16 bits/pixel	RGB565	1	—	—

(2) Data Arrangement for Available Pixel Formats

Data arrangement for each pixel format is given below.

- ARGB8888 (32 bits/pixel)

b31 b24	b23 b16	b15 b8	b7 b0
α 8 bits	Red 8 bits	Green 8 bits	Blue 8 bits

- RGB888 (32 bits/pixel)

b31 b24	b23 b16	b15 b8	b7 b0
*	Red 8 bits	Green 8 bits	Blue 8 bits

Note: * When CMPDAUF = 0, α value is the value output from the graphics display module.
When CMPDAUF = 1, α value is the value specified by CMPDFA[7:0].

- RGB565 (16 bits/pixel)

b15 b11	b10 b5	b4 b0
Red 5 bits	Green 6 bits	Blue 5 bits

chanhvinh.com

39.4.6 Rectangular Area Settings

Based on the selected graphics data, the start position and size of the rectangular area for which the CRC code is calculated can be set with the register. Figure 39.3 shows such a rectangular area and table 39.3 shows the register settings for the area.

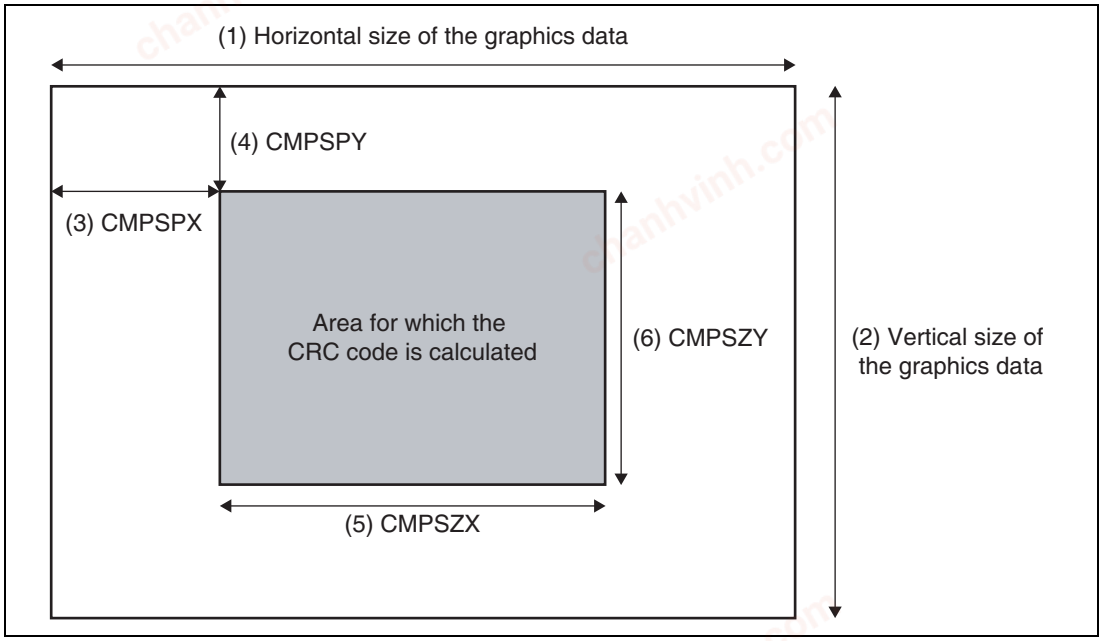

Figure 39.3 Rectangular Area for which the CRC Code is Calculated

chanhvinh.com

Table 39.3 Register Settings for the Rectangular Area for which the CRC Code is Calculated

No.	Symbol in the Figure	Register Used for Setting	Description
(1)	Horizontal size of the graphics data		Horizontal size of the graphics data. Set the size using the graphics display module.
(2)	Vertical size of the graphics data		Vertical size of the graphics data. Set the size using the graphics display module.
(3)	CMPSPX (horizontal start position)	DOCMSPXR	Set the horizontal distance from the upper left origin of the graphics data to the rectangular area for which the CRC code is calculated in pixel units.
(4)	CMPSPY (vertical start position)	DOCMSPYR	Set the vertical distance from the upper left origin of the graphics data to the rectangular area for which the CRC code is calculated in line units.
(5)	CMPSZX (horizontal size)	DOCMSZXR	Set the horizontal size of the rectangular area for which the CRC code is calculated in pixel units. The value should be set as follows: Horizontal size of the graphics data ≥ CMPSPX + CMPSZX.
(6)	CMPSZY (vertical size)	DOCMSZYR	Set the vertical size of the rectangular area for which the CRC code is calculated in line units. The value should be set as follows: Vertical size of the graphics data ≥ CMPSPY + CMPSZY.

chanhvinh.com

39.4.7 CRC Calculation Time Period and Comparison Timing

Figure 39.4 shows the CRC calculation time period and timing of comparing the calculated result with the expected value.

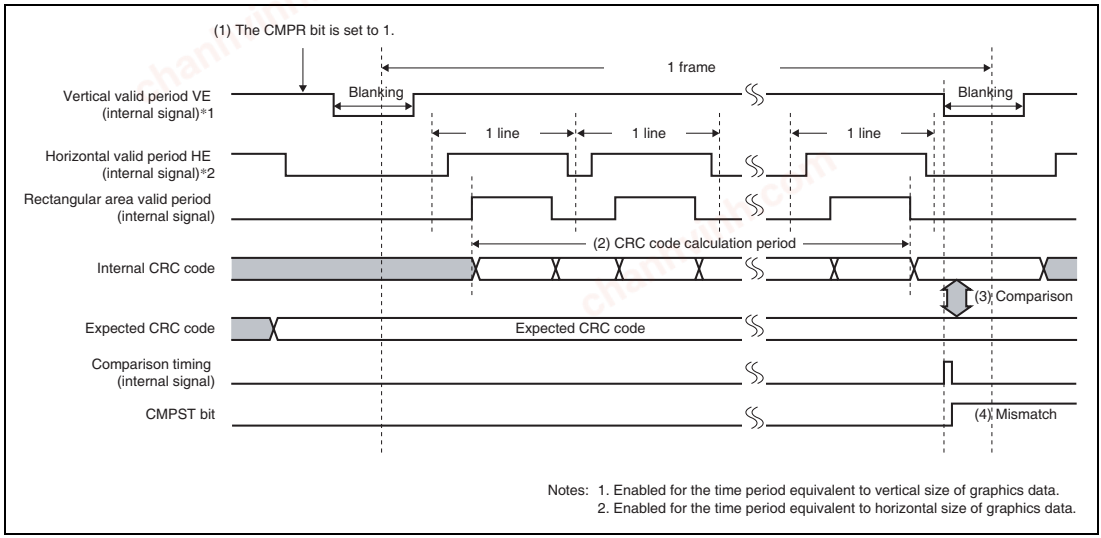

Figure 39.4 CRC Calculation Time Period and Timing of Comparing the Calculated Result with the Expected Value

[Operation]

(1) The operation starts at the next frame after the CMPR bit in DOCMCR is set to 1. For the register update timing, see section 39.4.8, Register Update Timing.

(2) CRC code is calculated in the set rectangular area.

(3) The CRC code calculation result is compared with the expected CRC code value (DOCMECRCR) at the end of the valid period of the graphics data.

(4) If the compared CRC codes do not match, the CMPST bit in DOCMSTR is set.

chanhvinh.com

39.4.8 Register Update Timing

(1) Timing when Register Values are Loaded Inside

All the register bits except the CMPR bit in DOCMCR are loaded inside immediately after the registers are written to. Thus, if the register is updated with the CMPRU bit in DOCMCR as 1, an unexpected result is likely to be obtained in the CRC code calculation. The registers that affect the CRC code calculation (i.e., registers other than DOCMCLSTR and DOCMIENR) should be updated after confirming that the CMPRU bit in DOCMCR is 0.

The CMPR bit in DOCMCR is loaded inside upon detection of the start of the valid period of the graphics data. Thus, even if the register is rewritten to in the middle of a frame, the CRC code calculation of the frame does not get affected.

(2) Timing when Internal State is Reflected in Registers

The internal state is reflected in DOCMSTR and DOCMCCRCR at the end of the valid period of the graphics data. The internal state of the CMPR bit is reflected in the CMPRU bit in DOCMCR at the start of the valid period of the graphics data.

Figure 39.5 shows the register update timing.

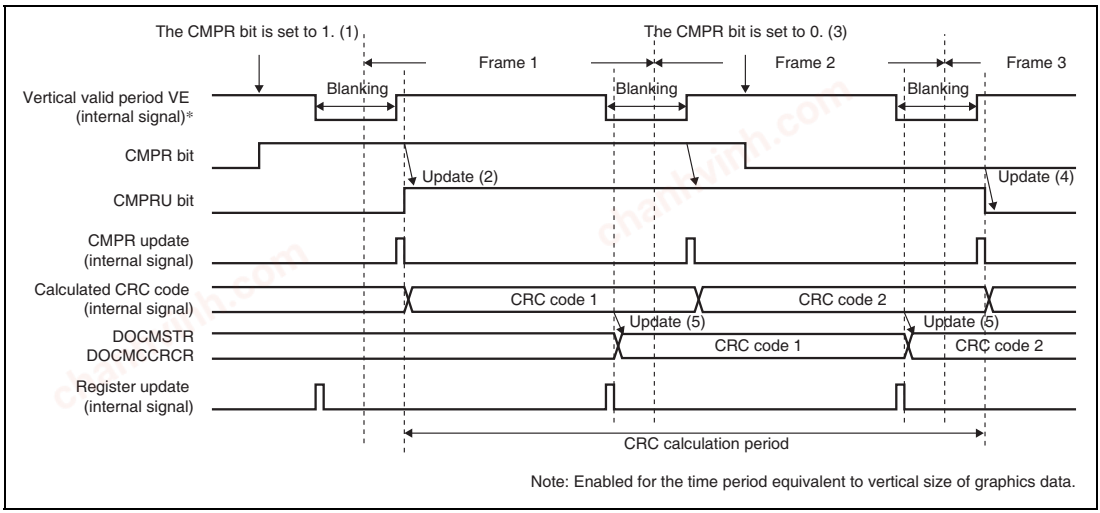

Figure 39.5 Register Update Timing

chanhvinh.com

[Operation]

(1) The CMPR bit is set to 1. This bit is not immediately loaded inside.
(2) CRC calculation is carried out after the CMPR bit value is loaded inside upon detection of the start of the valid period of the graphics data.
(3) To suspend the CRC comparison, the CMPR bit is set to 0. Similarly to (1), this bit is not immediately loaded inside.
(4) The CRC calculation is suspended after the CMPR bit value is loaded inside upon detection of the start of the valid period of the graphics data.
(5) The internal state is reflected in the register at the end of the valid period of the graphics data.

39.4.9 Operation Flow

(1) Procedure for Starting Display Out Comparison

Figure 39.6 shows a sample procedure for starting the display out comparison.

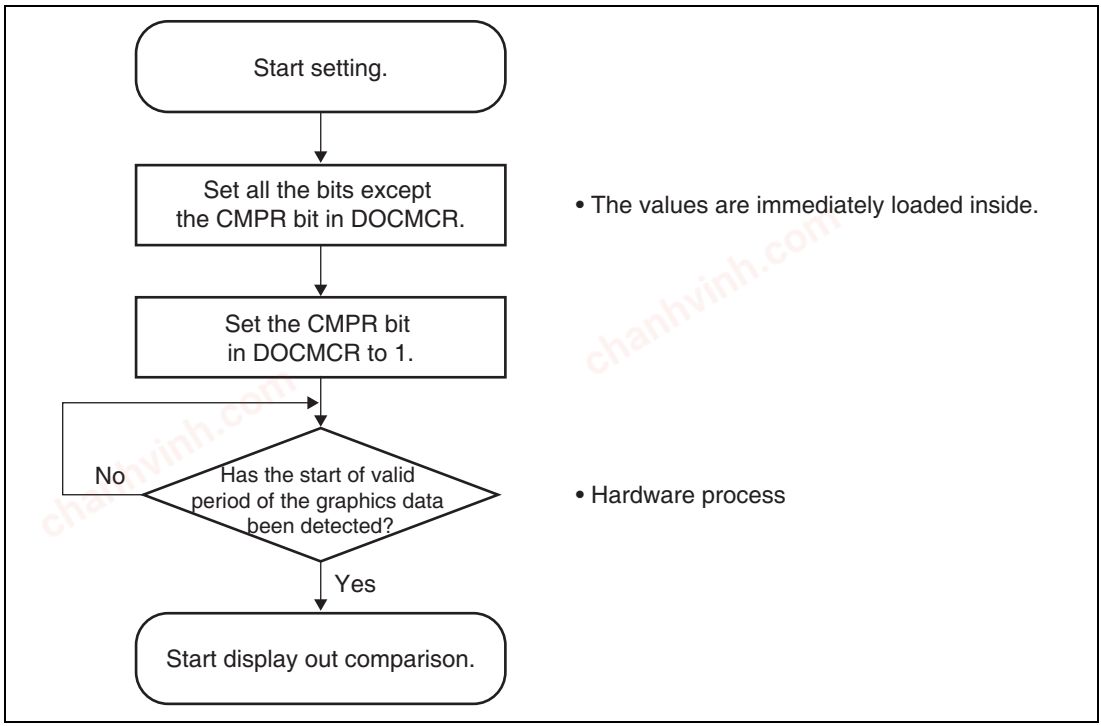

Figure 39.6 Sample Procedure for Starting the Display Out Comparison

chanhvinh.com

(2) Procedure for Changing Register Setting

Figure 39.7 shows a sample procedure for changing the register setting during display out comparison.

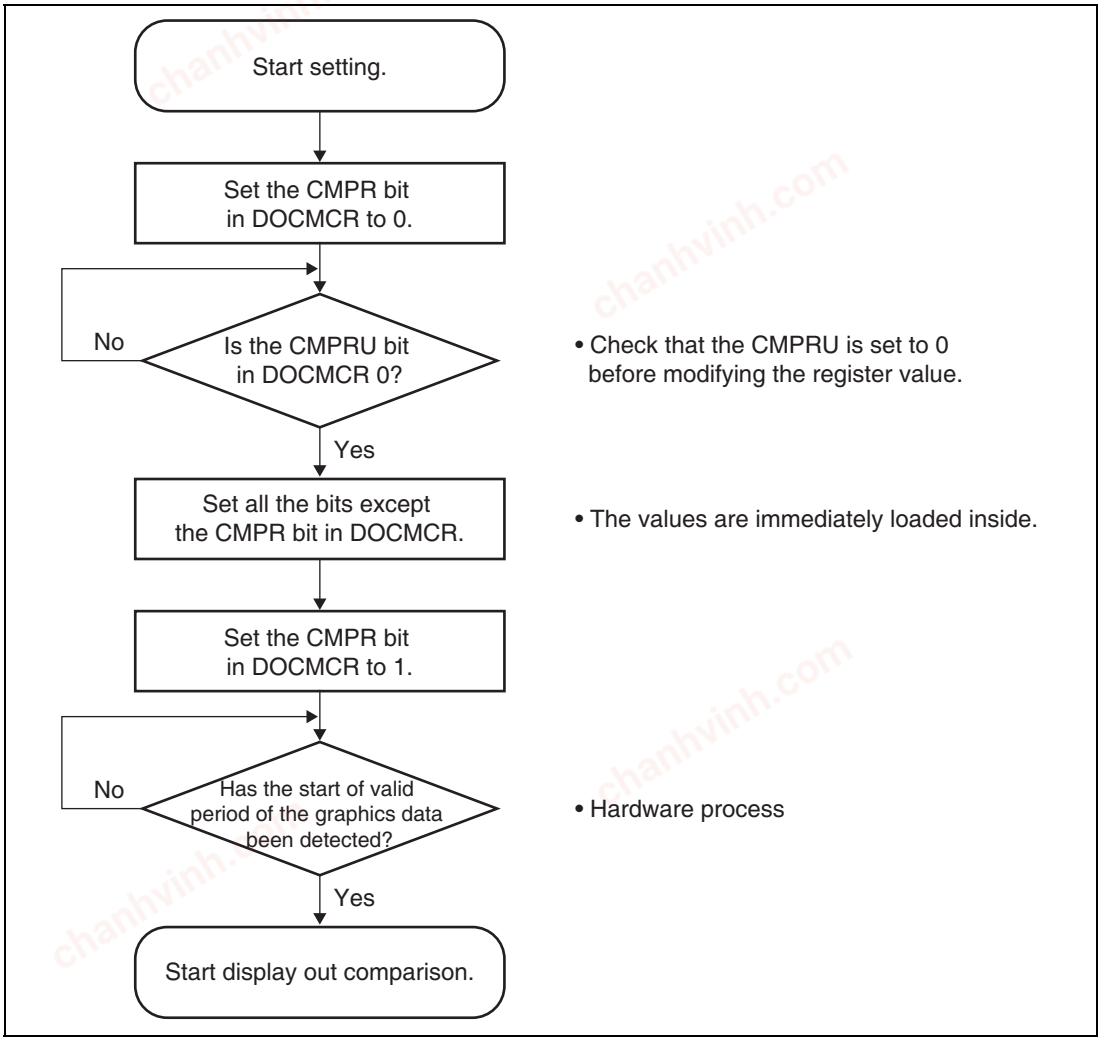

Figure 39.7 Sample Procedure for Changing the Register Setting during Display Out Comparison

chanhvinh.com

39.5 Interrupt

The display out comparison mismatch detection interrupt is provided as an interrupt source.

The interrupt request is generated when the CMPIEN bit in DOCMIENR and the CMPST bit in DOCMSTR are both set to 1.

The CMPST bit should be cleared from within the interrupt service routine. However, withdrawing the interrupt request from the CPU after clearing of the CMPST bit takes a fixed amount of time. Thus, avoid erroneous acceptance of the interrupt for which the source bit should have been cleared by checking twice to ensure that the CMPST bit is actually clear, and only then issue the RTE instruction.

39.6 Usage Note

39.6.1 Expected CRC Value

When graphics plane 1 to graphics plane 3 are selected, the expected CRC code value (DOCMECRCR) should be calculated from the graphics data to be used by using the software. When the graphics data after α blending is selected, the graphics data after α blending should be selected at the time of debugging and the calculated CRC code value read from DOCMCCRCR should be used as the expected CRC code value. This is because there is a possibility of mismatching of the result of superimposition of the graphics data by the software and the result of superimposition by the graphics display module due to an error in calculation when the graphics data after α blending is selected.

39.6.2 Expansion Control Functionality

When scaling settings are applied for expansion processing by video display controller 4, this module becomes incapable of generating CRC codes. Stop this module while expansion processing is being applied.

chanhvinh.com

chanhvinh.com
chanhvinh.com
chanhvinh.com

chanhvinh.com

Section 40 OpenVG™-Compliant Renesas Graphics Processor

40.1 Specification

This processor supports OpenVG™1.1, an open source 2D vector graphics API. Dedicated hardware and a programmable shader are used to accelerate OpenVG™ Stage 2 to Stage 8 processing. Please refer to the Khronos Group Web site for the specifications of OpenVG™1.1.

40.2 Usage Note

When using the OpenVG™ graphics processor and JPEG codec unit at the same time, it is necessary to implement exclusive bus access control in software to ensure that they do not access the bus simultaneously. Operation cannot be guaranteed if the OpenVG™ graphics processor and JPEG codec unit access the bus simultaneously.

chanhvinh.com

chanhvinh.com
chanhvinh.com
chanhvinh.com
chanhvinh.com

chanhvinh.com

Section 41 JPEG Codec Unit

The JPEG codec unit incorporates a JPEG codec conforming to the JPEG baseline compression and decompression standard to provide high-speed compression of image data and high-speed decoding of JPEG data.

41.1 Features

The JPEG codec unit has the following features:

- Conforms to the JPEG baseline standard within the range described in this document.
  This module does not support the following basic features:
  Scanning with two elements
  Non-interleave scanning with multiple elements
- Operational precision: Conforming to JPEG Part 2, ISO-IEC10918-2
- Image input/output system: Block interleave method
- Pixel format:
  Compression: YCbCr422 (H = 2:1:1, V = 1:1:1)
  Decompression: YCbCr444 (H = 1:1:1, V = 1:1:1), YCbCr422 (H = 2:1:1, V = 1:1:1), YCbCr411 (H = 4:1:1, V = 1:1:1), YCbCr420 (H = 2:1:1, V = 2:1:1)
  Output pixel format to the buffer: YCbCr422, ARGB8888, RGB565
- Four quantization tables provided
- Four Huffman tables provided (two tables for AC coefficients and two tables for DC coefficients)
- Markers supported: SOI (start of image), SOF0 (start of frame type 0), SOS (start of scan), DQT (define quantization tables), DHT (define Huffman tables), DRI (define restart interval), RSTm (restart marks), and EOI (end of image)
- Image data rate: Max. 133.34 Mbytes/s (at 66.67-MHz operation)
- The buffer size can be reduced by using the mode in which data transfer is temporarily stopped each time the specified number of lines or the specified amount of data is transferred during image data input/output or coded data input.
- Processing unit: 8-byte address boundary units can be set
- Image sizes that can be processed: Sizes divisible by the minimum coded unit (MCU): 8 lines by 8 pixels in YCbCr444; 8 lines by 16 pixels in YCbCr422; 8 lines by 32 pixels in YCbCr411; 16 lines by 16 pixels in YCbCr420

Note: Compression and decompression processing of images in unsupported pixel formats or unsupported image sizes should be avoided.

chanhvinh.com

Figure 41.1 shows a block diagram.

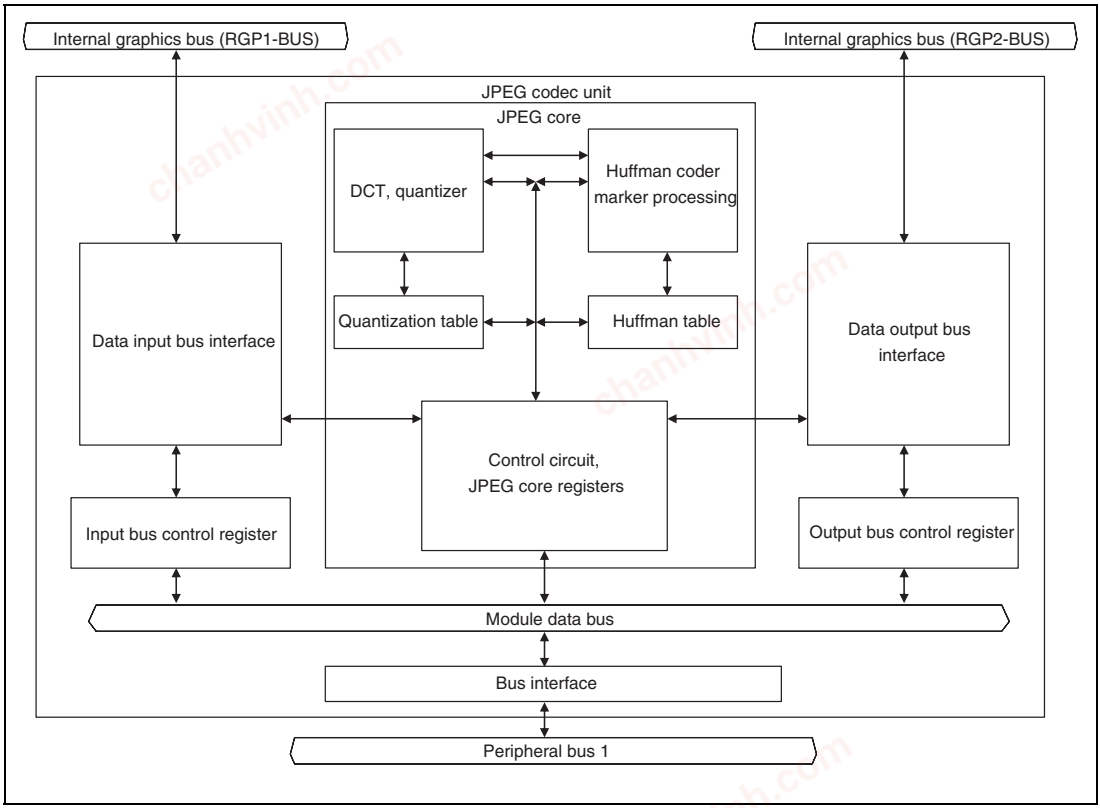

Figure 41.1 Block Diagram

chanhvinh.com

41.2 Register Descriptions

Table 41.1 shows the register configuration.

Table 41.1 Register Configuration

Register Name	Abbreviation	R/W	Address	Access Size
JPEG code mode register	JCMOD	R/W	H'E801 7000	8
JPEG code command register	JCCMD	R/W	H'E801 7001	8
JPEG code quantization table number register	JCQTN	R/W	H'E801 7003	8
JPEG code Huffman table number register	JCHTN	R/W	H'E801 7004	8
JPEG code DRI upper register	JCDRIU	R/W	H'E801 7005	8
JPEG code DRI lower register	JCDRID	R/W	H'E801 7006	8
JPEG code vertical size upper register	JCVSZU	R/W	H'E801 7007	8
JPEG code vertical size lower register	JCVSZD	R/W	H'E801 7008	8
JPEG code horizontal size upper register	JCHSZU	R/W	H'E801 7009	8
JPEG code horizontal size lower register	JCHSZD	R/W	H'E801 700A	8
JPEG code data count upper register	JCDTCU	R	H'E801 700B	8
JPEG code data count middle register	JCDTCM	R	H'E801 700C	8
JPEG code data count lower register	JCDTCD	R	H'E801 700D	8
JPEG interrupt enable register 0	JINTE0	R/W	H'E801 700E	8
JPEG interrupt status register 0	JINTS0	R/W	H'E801 700F	8
JPEG code decode error register	JCDERR	R/W	H'E801 7010	8
JPEG code reset register	JCRST	R	H'E801 7011	8
JPEG interface compression control register	JIFECNT	R/W	H'E801 7040	32
JPEG interface compression source address register	JIFESA	R/W	H'E801 7044	32
JPEG interface compression line offset register	JIFESOFST	R/W	H'E801 7048	32
JPEG interface compression destination address register	JIFEDA	R/W	H'E801 704C	32

chanhvinh.com

Register Name	Abbreviation	R/W	Address	Access Size
JPEG interface compression source line count register	JIFESLC	R/W	H'E801 7050	32
JPEG interface decompression control register	JIFDCNT	R/W	H'E801 7058	32
JPEG interface decompression source address register	JIFDSA	R/W	H'E801 705C	32
JPEG interface decompression destination offset register	JIFDDOFST	R/W	H'E801 7060	32
JPEG interface decompression destination address register	JIFDDA	R/W	H'E801 7064	32
JPEG interface decompression source count register	JIFDSDC	R/W	H'E801 7068	32
JPEG interface decompression destination line count register	JIFDDLC	R/W	H'E801 706C	32
JPEG interface decompression α setting register	JIFDADT	R/W	H'E801 7070	32
JPEG interrupt enable register 1	JINTE1	R/W	H'E801 708C	32
JPEG interrupt status register 1	JINTS1	R/W	H'E801 7090	32
JPEG code quantization table 0 register	JCQTBL0	R/W	H'E801 7100 to H'E801 713F	8
JPEG code quantization table 1 register	JCQTBL1	R/W	H'E801 7140 to H'E801 717F	8
JPEG code quantization table 2 register	JCQTBL2	R/W	H'E801 7180 to H'E801 71BF	8
JPEG code quantization table 3 register	JCQTBL3	R/W	H'E801 71C0 to H'E801 71FF	8
JPEG code Huffman table DC0 register	JCHTBD0	W	H'E801 7200 to H'E801 721B	8
JPEG code Huffman table AC0 register	JCHTBA0	W	H'E801 7220 to H'E801 72D1	8
JPEG code Huffman table DC1 register	JCHTBD1	W	H'E801 7300 to H'E801 731B	8
JPEG code Huffman table AC1 register	JCHTBA1	W	H'E801 7320 to H'E801 73D1	8

Note: For the settings of the JPEG code quantization table and JPEG code Huffman table, see section 41.3.1 (4), Table Setting.

chanhvinh.com

41.2.1 JPEG Code Mode Register (JCMOD)

JCMOD sets the operating mode before this module starts operation.

Bit:	7	6	5	4	3	2	1	0
	—	—	—	—	DSP	REDU[2:0]		
Initial value:	0	0	0	0	0	0	0	0
R/W(compress):	R	R	R	R	R/W	R/W	R/W	R/W
R/W(decompress):	R	R	R	R	R/W	R	R	R

Bit	Bit Name	Initial Value	R/W: Compression	R/W: De-compression	Description
7 to 4	—	All 0		R	Reserved These bits are always read as 0. The write value should always be 0.
3	DSP	0		R/W	Compression/Decompression Set 0: Compression process 1: Decompression process Note: When changing between processing for compression and for decompression, be sure to reset this module in advance by setting the JCUSRST bit in the software reset control register 2 (SWRSTCR2) of the power-down modes.
2 to 0	REDU[2:0]	000	R/W	R	Pixel Format [Compression] 001: YCbCr422 Other than above: Setting prohibited. [Decompression] 000: YCbCr444 001: YCbCr422 110: YCbCr411 010: YCbCr420 Other than above: Error (this module cannot process normally.)

chanhvinh.com

41.2.2 JPEG Code Command Register (JCCMD)

JCCMD sets commands. Bits of this register need not be cleared to 0 after setting a command.

Multiple commands must not be set simultaneously.

Bit:	7	6	5	4	3	2	1	0
	BRST	—	—	—	—	JEND	JRST	JSRT
Initial value:	0	0	0	0	0	0	0	0
R/W(compres):	R*/W	R	R	R	R	R*/W	Undefined	R*/W
R/W(decompress):	R*/W	R	R	R	R	R*/W	R*/W	R*/W

Note: * Values read from these bits are undefined.

Bit	Bit Name	Initial Value	R/W: Compression	R/W: De-compression	Description
7	BRST	0	R*/W		Bus Reset Setting this bit to 1 resets the internal circuits. While this module is in operation (from setting the JPEG core process start command to writing the last output coded/image data), do not set this bit to 1. For the bus reset processing, see section 41.5, Bus Reset Processing.
6 to 3	—	All 0	R		Reserved These bits are always read as 0. The write value should always be 0.
2	JEND	0	R*/W		Interrupt Request Clear Command This bit is valid only for the interrupt sources corresponding to bits INS6, INS5, and INS3 in JINTS0. To clear an interrupt request, set this bit to 1.

chanhvinh.com

Bit	Bit Name	Initial Value	R/W		Description
			Compression	De-compression	
1	JRST	0	Invalid	R*/W	JPEG Core Process Stop Clear Command To clear the process-stopped state caused by requests to read the image size and pixel format (enabled by the INT3 bit in JINTE0), set this bit to 1.
0	JSRT	0	R*/W		JPEG Core Process Start Command To start JPEG core processing, set this bit to 1. Do not write this bit to 1 again while this module is in operation.

Note: * Values read from these bits are undefined.

chanhvinh.com

41.2.3 JPEG Code Quantization Table Number Register (JCQTN)

JCQTN sets the quantization table number before compression process is started.

- To use quantization table No. 0 (JCQTBL0) as the first color component, set QT1 to B'00
- To use quantization table No. 1 (JCQTBL1) as the first color component, set QT1 to B'01
- To use quantization table No. 2 (JCQTBL2) as the first color component, set QT1 to B'10
- To use quantization table No. 3 (JCQTBL3) as the first color component, set QT1 to B'11

Bit:	7	6	5	4	3	2	1	0
	—	—	QT3[1:0]		QT2[1:0]		QT1[1:0]	
Initial value:	0	0	0	0	0	0	0	0
R/W(compress):	R	R	R/W	R/W	R/W	R/W	R/W	R/W
R/W(decompress):	R	R	R	R	R	R	R	R

Bit	Bit Name	Initial Value	R/W: Compression	R/W: De-compression	Description
7, 6	—	All 0		R	Reserved These bits are always read as 0. The write value should always be 0.
5, 4	QT3[1:0]	00	R/W	R	Quantization table number for the third color component
3, 2	QT2[1:0]	00	R/W	R	Quantization table number for the second color component
1, 0	QT1[1:0]	00	R/W	R	Quantization table number for the first color component

chanhvinh.com

41.2.4 JPEG Code Huffman Table Number Register (JCHTN)

JCHTN sets the Huffman table number (AC/DC) before compression process is started.

- To use DC/AC Huffman table No. 0 (JCHTBD0 and JCHTBA0) as the first color component, set bits HTA1 and HTD1 to B'0
- To use DC/AC Huffman table No. 1 (JCHTBD1 and JCHTBA1) as the first color component, set bits HTA1 and HTD1 to B'1

Bit:	7	6	5	4	3	2	1	0
	—	—	HTA3	HTD3	HTA2	HTD2	HTA1	HTD1
Initial value:	0	0	0	0	0	0	0	0
R/W(compress):	R	R	R/W	R/W	R/W	R/W	R/W	R/W
R/W(decompress):	R	R	R	R	R	R	R	R

Bit	Bit Name	Initial Value	R/W: Compression	R/W: De-compression	Description
7, 6	—	All 0		R	Reserved These bits are always read as 0. The write value should always be 0.
5	HTA3	0	R/W	R	Huffman table number (AC) for the third color component
4	HTD3	0	R/W	R	Huffman table number (DC) for the third color component
3	HTA2	0	R/W	R	Huffman table number (AC) for the second color component
2	HTD2	0	R/W	R	Huffman table number (DC) for the second color component
1	HTA1	0	R/W	R	Huffman table number (AC) for the first color component
0	HTD1	0	R/W	R	Huffman table number (DC) for the first color component

chanhvinh.com

41.2.5 JPEG Code DRI Upper Register (JCDRIU)

JCDRIU sets the upper bytes of the minimum coded units (MCUs) preceding an RST marker.

Bit:	7	6	5	4	3	2	1	0
	DRIU[7:0]							
Initial value:	0	0	0	0	0	0	0	0
R/W(compress):	R/W	R/W	R/W	R/W	R/W	R/W	R/W	R/W
R/W(decompress):	Undefined	Undefined	Undefined	Undefined	Undefined	Undefined	Undefined	Undefined

Bit	Bit Name	Initial Value	R/W		Description
			Compression	De-compression	
7 to 0	DRIU[7:0]	H'00	R/W	Invalid	Upper Bytes of MCUs Preceding RST Marker When both upper and lower bytes are set to H'00, neither a DRI nor an RST marker is placed.

chanhvinh.com

41.2.6 JPEG Code DRI Lower Register (JCDRID)

JCDRID sets the lower bytes of MCUs preceding an RST marker.

Bit:	7	6	5	4	3	2	1	0
	DRID[7:0]							
Initial value:	0	0	0	0	0	0	0	0
R/W(compress):	R/W	R/W	R/W	R/W	R/W	R/W	R/W	R/W
R/W(decompress):	Undefined	Undefined	Undefined	Undefined	Undefined	Undefined	Undefined	Undefined

Bit	Bit Name	Initial Value	R/W		Description
			Compression	De-compression	
7 to 0	DRID[7:0]	H'00	R/W	Invalid	Lower Bytes of MCUs Preceding RST Marker When both upper and lower bytes are set to H'00, neither a DRI nor an RST marker is placed.

chanhvinh.com

41.2.7 JPEG Code Vertical Size Upper Register (JCVSZU)

JCVSZU sets the upper bytes of the vertical image size.

Bit:	7	6	5	4	3	2	1	0
	VSZU[7:0]							
Initial value:	0	0	0	0	0	0	0	0
R/W(compress):	R/W	R/W	R/W	R/W	R/W	R/W	R/W	R/W
R/W(decompress):	R	R	R	R	R	R	R	R

			R/W		
Bit	Bit Name	Initial Value	Compression	De-compression	Description
7 to 0	VSZU[7:0]	H'00	R/W	R	Upper Bytes of Vertical Image Size In decompression process, a downloaded value from the JPEG coded data is set.

chanhvinh.com

41.2.8 JPEG Code Vertical Size Lower Register (JCVSZD)

JCVSZD sets the lower bytes of the vertical image size.

Bit:	7	6	5	4	3	2	1	0
	VSZD[7:0]							
Initial value:	0	0	0	0	0	0	0	0
R/W(compress):	R/W	R/W	R/W	R/W	R/W	R/W	R/W	R/W
R/W(decompress):	R	R	R	R	R	R	R	R

			R/W		
Bit	Bit Name	Initial Value	Compression	De-compression	Description
7 to 0	VSZD[7:0]	H'00	R/W	R	Lower Bytes of Vertical Image Size In decompression process, a downloaded value from the JPEG coded data is set.

chanhvinh.com

41.2.9 JPEG Code Horizontal Size Upper Register (JCHSZU)

JCHSZU sets the upper bytes of the horizontal image size.

Bit:	7	6	5	4	3	2	1	0
	HSZU[7:0]							
Initial value:	0	0	0	0	0	0	0	0
R/W(compress):	R/W	R/W	R/W	R/W	R/W	R/W	R/W	R/W
R/W(decompress):	R	R	R	R	R	R	R	R

			R/W		
Bit	Bit Name	Initial Value	Compression	De-compression	Description
7 to 0	HSZU[7:0]	H'00	R/W	R	Upper Bytes of Horizontal Image Size In decompression process, a downloaded value from the JPEG coded data is set.

chanhvinh.com

41.2.10 JPEG Coded Horizontal Size Lower Register (JCHSZD)

JCHSZD sets the lower bytes of the horizontal image size.

Bit:	7	6	5	4	3	2	1	0
	HSZD[7:0]							
Initial value:	0	0	0	0	0	0	0	0
R/W(compress):	R/W	R/W	R/W	R/W	R/W	R/W	R/W	R/W
R/W(decompress):	R	R	R	R	R	R	R	R

			R/W		
Bit	Bit Name	Initial Value	Compression	De-compression	Description
7 to 0	HSZD[7:0]	H'00	R/W	R	Lower Bytes of Horizontal Image Size In decompression process, a downloaded value from the JPEG coded data is set.

chanhvinh.com

41.2.11 JPEG Code Data Count Upper Register (JCDTCU)

The upper bytes for the counted amount of data to be compressed are set to JCDTCU. The values of this register are reset before compression starts.

Bit:	7	6	5	4	3	2	1	0
	DCU[7:0]							
Initial value:	0	0	0	0	0	0	0	0
R/W(compress):	R	R	R	R	R	R	R	R
R/W(decompress):	Undefined	Undefined	Undefined	Undefined	Undefined	Undefined	Undefined	Undefined

Bit	Bit Name	Initial Value	R/W		Description
			Compression	De-compression	
7 to 0	DCU[7:0]	H'00	R	Invalid	Upper bytes of the counted amount of data to be compressed

chanhvinh.com

41.2.12 JPEG Code Data Count Middle Register (JCDTCM)

The middle bytes for the counted amount of data to be compressed are set to JCDTCM. The values of this register are reset before compression starts.

Bit:	7	6	5	4	3	2	1	0
	DCM[7:0]							
Initial value:	0	0	0	0	0	0	0	0
R/W(compress):	R	R	R	R	R	R	R	R
R/W(decompress):	Undefined	Undefined	Undefined	Undefined	Undefined	Undefined	Undefined	Undefined

Bit	Bit Name	Initial Value	R/W		Description
			Compression	De-compression	
7 to 0	DCM[7:0]	H'00	R	Invalid	Middle bytes of the counted amount of data to be compressed

chanhvinh.com

41.2.13 JPEG Code Data Count Lower Register (JCDTCD)

The lower bytes for the counted amount of data to be compressed are set to JCDTCD. The values of this register are reset before compression starts.

Bit:	7	6	5	4	3	2	1	0
	DCD[7:0]							
Initial value:	0	0	0	0	0	0	0	0
R/W(compress):	R	R	R	R	R	R	R	R
R/W(decompress):	Undefined	Undefined	Undefined	Undefined	Undefined	Undefined	Undefined	Undefined

Bit	Bit Name	Initial Value	R/W		Description
			Compression	De-compression	
7 to 0	DCD[7:0]	H'00	R	Invalid	Lower bytes of the counted amount of data to be compressed

chanhvinh.com

41.2.14 JPEG Interrupt Enable Register 0 (JINTE0)

JINTE0 enables interrupts.

When any of bits INT7 to INT5 is set to B'1, the INS5 bit in JINTS0 indicates B'1 as the error status upon occurrence of the compression data error, and the ERR bit in JCDERR indicates the particular error code.

Bit:	7	6	5	4	3	2	1	0
	INT7	INT6	INT5	—	INT3	—	—	—
Initial value:	0	0	0	0	0	0	0	0
R/W(compress):	Undefined	Undefined	Undefined	R	Undefined	R	R	R
R/W(decompress):	R/W	R/W	R/W	R	R/W	R	R	R

Bit	Bit Name	Initial Value	R/W: Compression	R/W: De-compression	Description
7	INT7	0	Invalid	R/W	This bit enables an interrupt to be generated when the number of data in the restart interval of the Huffman-coding segment is not correct in decompression. When this bit is not set to enable interrupt generation, an error code is not returned.
6	INT6	0	Invalid	R/W	This bit enables an interrupt to be generated when the total number of data in the Huffman-coding segment is not correct in decompression. When this bit is not set to enable interrupt generation, an error code is not returned.
5	INT5	0	Invalid	R/W	This bit enables an interrupt to be generated when the final number of MCU data in the Huffman-coding segment is not correct in decompression. When this bit is not set to enable interrupt generation, an error code is not returned.
4	—	0		R	Reserved This bit is always read as 0. The write value should always be 0.

chanhvinh.com

Bit	Bit Name	Initial Value	R/W		Description
			Compression	De-compression	
3	INT3	0	Invalid	R/W	This bit enables an interrupt to be generated when it has been determined that the image size and the subsampling setting of the compressed data can be read through analyzing the data.
2 to 0	—	All 0		R	Reserved These bits are always read as 0. The write value should always be 0.

chanhvinh.com

41.2.15 JPEG Interrupt Status Register 0 (JINTS0)

JINTS0 identifies the interrupt sources.

The interrupt sources of this register should be cleared by clearing the corresponding interrupt status bits to 0 and setting the relevant bit in JCCMD appropriately.

Bit:	7	6	5	4	3	2	1	0
	—	INS6	INS5	—	INS3	—	—	—
Initial value:	0	0	0	0	0	0	0	0
R/W(compress):	R	R/W*	Undefined	R	Undefined	R	R	R
R/W(decompress):	R	R/W*	R/W*	R	R/W*	R	R	R

Note: * Clear this bit by writing 0 to it.
Do not write 1 to this bit.

Bit	Bit Name	Initial Value	R/W		Description
			Compression	De-compression	
7	—	0		R	Reserved This bit is always read as 0. The write value should always be 0.
6	INS6	0		R/W*	This bit is set to 1 when this module completes compression process normally.
5	INS5	0	Invalid	R/W*	This bit is set to 1 when a compressed data error occurs.
4	—	0		R	Reserved This bit is always read as 0. The write value should always be 0.
3	INS3	0	Invalid	R/W*	This bit is set to 1 when the image size and pixel format can be read. When an interrupt occurs, this module stops processing and the state is indicated by the JCRST register. To make this module resume processing, set the JPEG core process stop clear command bit (JRST) in JCCMD.
2 to 0	—	All 0		R	Reserved These bits are always read as 0. The write value should always be 0.

Note: * Clear this bit by writing 0 to it. Do not write 1 to this bit.

chanhvinh.com

41.2.16 JPEG Code Decode Error Register (JCDERR)

JCDERR indicates the error code to identify the type of the error which has occurred in the compressed data analysis for decompression. The values of this register are reset before this module starts decompression.

Bit:	7	6	5	4	3	2	1	0
	—	—	—	—	ERR[3:0]			
Initial value:	0	0	0	0	1	0	1	0
R/W(compress):	R	R	R	R	Undefined	Undefined	Undefined	Undefined
R/W(decompress):	R	R	R	R	R/W	R/W	R/W	R/W

Bit	Bit Name	Initial Value	R/W: Compression	R/W: De-compression	Description
7 to 4	—	All 0		R	Reserved These bits are always read as 0.
3 to 0	ERR[3:0]	1010	Invalid	R/W	Error Code (See tables 41.3 and 41.4.)

chanhvinh.com

41.2.17 JPEG Code Reset Register (JCRST)

JCRST indicates a processing-stopped state caused by requests to read the image size and pixel format (enabled by the INT3 bit in JINTE0). To resume processing, set the JPEG core process stop clear command bit (JRST) in JCCMD.

Bit:	7	6	5	4	3	2	1	0
	—	—	—	—	—	—	—	RST
Initial value:	0	0	0	0	0	0	0	0
R/W(compress):	R	R	R	R	R	R	R	Undefined
R/W(decompress):	R	R	R	R	R	R	R	R

Bit	Bit Name	Initial Value	R/W: Compression	R/W: De-compression	Description
7 to 1	—	All 0		R	Reserved These bits are always read as 0.
0	RST	0	Invalid	R	Operating State 0: State other than below 1: Suspended state caused by interrupt sources of JINTE0

chanhvinh.com

41.2.18 JPEG Interface Compression Control Register (JIFECNT)

JIFECNT controls the compression process.

Bit:	31	30	29	28	27	26	25	24	23	22	21	20	19	18	17	16
	—	—	—	—	—	—	—	—	—	—	—	—	—	—	—	—
Initial value:	0	0	0	0	0	0	0	0	0	0	0	0	0	0	0	0
R/W(compress):	R	R	R	R	R	R	R	R	R	R	R	R	R	R	R	R
R/W(decompress):	R	R	R	R	R	R	R	R	R	R	R	R	R	R	R	R

Bit:	15	14	13	12	11	10	9	8	7	6	5	4	3	2	1	0
	—	—	—	—	—	JOUTSWAP[2:0]			—	DIN RINI	DIN RCMD	DIN LC	—	DINSWAP[2:0]		
Initial value:	0	0	0	0	0	0	0	0	0	0	0	0	0	0	0	0
R/W(compress):	R	R	R	R	R	R/W	R/W	R/W	R	R/W	R/W	R/W	R	R/W	R/W	R/W
R/W(decompress):	R	R	R	R	R	Undefined	Undefined	Undefined	R	Undefined	Undefined	Undefined	R	Undefined	Undefined	Undefined

Bit	Bit Name	Initial Value	R/W: Compression	R/W: De-compression	Description
31 to 11	—	All 0		R	Reserved These bits are always read as 0. The write value should always be 0.
10 to 8	JOUTSWAP[2:0]	000	R/W	Invalid	Byte/Word/Longword Swap Output coded data in compression is swapped. 000: (1) (2) (3) (4) (5) (6) (7) (8) 001: (2) (1) (4) (3) (6) (5) (8) (7) [Byte swap] 010: (3) (4) (1) (2) (7) (8) (5) (6) [Word swap] 011: (4) (3) (2) (1) (8) (7) (6) (5) [Word - byte swap] 100: (5) (6) (7) (8) (1) (2) (3) (4) [Longword swap] 101: (6) (5) (8) (7) (2) (1) (4) (3) [Longword - byte swap] 110: (7) (8) (5) (6) (3) (4) (1) (2) [Longword - word swap] 111: (8) (7) (6) (5) (4) (3) (2) (1) [Longword - word - byte swap]
7	—	0		R	Reserved This bit is always read as 0. The write value should always be 0.

chanhvinh.com

Bit	Bit Name	Initial Value	R/W		Description
			Compression	De-compression	
6	DINRINI	0	R/W	Invalid	Address Initialization when Resuming Input of Image Data Lines This bit is only valid when the count mode for stopping the input of image data lines is on. Set this bit before writing 1 to the data-line resume command bit. 0: The transfer address is not initialized when the input of image data lines is restarted. 1: The transfer address is initialized when the input of image data lines is restarted.
5	DINRCMD	0	R/W	Invalid	Input Image Data Lines Resume Command This bit is valid only when the count mode for stopping the input of image data lines is on. Setting this bit to 1 resumes reading input image data. This bit is always read as 0.
4	DINLC	0	R/W	Invalid	Count Mode Setting for Stopping Input Image Data Lines 0: Count mode for stopping the input of image data lines is off. 1: Count mode for stopping the input of image data lines is on.
3	—	0		R	Reserved This bit is always read as 0. The write value should always be 0.

chanhvinh.com

Bit	Bit Name	Initial Value	R/W		Description
			Compression	De-compression	
2 to 0	DINSWAP [2:0]	000	R/W	Invalid	Byte/Word Swap Input image data in compression is swapped. 000: (1) (2) (3) (4) (5) (6) (7) (8) 001: (2) (1) (4) (3) (6) (5) (8) (7) [Byte swap] 010: (3) (4) (1) (2) (7) (8) (5) (6) [Word swap] 011: (4) (3) (2) (1) (8) (7) (6) (5) [Word - byte swap] 100: (5) (6) (7) (8) (1) (2) (3) (4) [Longword swap] 101: (6) (5) (8) (7) (2) (1) (4) (3) [Longword - byte swap] 110: (7) (8) (5) (6) (3) (4) (1) (2) [Longword - word swap] 111: (8) (7) (6) (5) (4) (3) (2) (1) [Longword - word - byte swap]

chanhvinh.com

41.2.19 JPEG Interface Compression Source Address Register (JIFESA)

JIFESA sets the source address of the input image data. This register should be set in 8-byte units.

Bit:	31	30	29	28	27	26	25	24	23	22	21	20	19	18	17	16
	ESA[31:16]															
Initial value:	0	0	0	0	0	0	0	0	0	0	0	0	0	0	0	0
R/W(compress):	R/W	R/W	R/W	R/W	R/W	R/W	R/W	R/W	R/W	R/W	R/W	R/W	R/W	R/W	R/W	R/W
R/W(decompress):	Undefined	Undefined	Undefined	Undefined	Undefined	Undefined	Undefined	Undefined	Undefined	Undefined	Undefined	Undefined	Undefined	Undefined	Undefined	Undefined

Bit:	15	14	13	12	11	10	9	8	7	6	5	4	3	2	1	0
	ESA[15:0]															
Initial value:	0	0	0	0	0	0	0	0	0	0	0	0	0	0	0	0
R/W(compress):	R/W	R/W	R/W	R/W	R/W	R/W	R/W	R/W	R/W	R/W	R/W	R/W	R/W	R	R	R
R/W(decompress):	Undefined	Undefined	Undefined	Undefined	Undefined	Undefined	Undefined	Undefined	Undefined	Undefined	Undefined	Undefined	Undefined	Undefined	Undefined	Undefined

			R/W		
Bit	Bit Name	Initial Value	Compression	De-compression	Description
31 to 3	ESA[31:3]	H'0000 0000	R/W	Invalid	Input Image Data Source Address (in 8-byte units)
2 to 0	ESA[2:0]		R		The lower three bits should be set to 0.

chanhvinh.com

41.2.20 JPEG Interface Compression Line Offset Register (JIFESOFST)

JIFESOFST sets the line offset of the input image data (refer to section 41.3.4, Storing Image Data). This register should be set in 8-byte units.

Bit:	31	30	29	28	27	26	25	24	23	22	21	20	19	18	17	16
	—	—	—	—	—	—	—	—	—	—	—	—	—	—	—	—
Initial value:	0	0	0	0	0	0	0	0	0	0	0	0	0	0	0	0
R/W(compress):	R	R	R	R	R	R	R	R	R	R	R	R	R	R	R	R
R/W(decompress):	R	R	R	R	R	R	R	R	R	R	R	R	R	R	R	R

Bit:	15	14	13	12	11	10	9	8	7	6	5	4	3	2	1	0
	—	ESMW[14:0]														
Initial value:	0	0	0	0	0	0	0	0	0	0	0	0	0	0	0	0
R/W(compress):	R	R/W	R/W	R/W	R/W	R/W	R/W	R/W	R/W	R/W	R/W	R/W	R/W	R	R	R
R/W(decompress):	R	Undefined	Undefined	Undefined	Undefined	Undefined	Undefined	Undefined	Undefined	Undefined	Undefined	Undefined	Undefined	Undefined	Undefined	Undefined

Bit	Bit Name	Initial Value	R/W: Compression	R/W: De-compression	Description
31 to 15	—	All 0		R	Reserved These bits are always read as 0. The write value should always be 0.
14 to 3	ESMW [14:3]	H'0000	R/W	Invalid	Input Image Data Lines Offset (in 8-byte units)
2 to 0	ESMW[2:0]		R		The lower three bits should be set to 0.

chanhvinh.com

41.2.21 JPEG Interface Compression Destination Address Register (JIFEDA)

JIFEDA sets the destination address of the output coded data. This register should be set in 8-byte units.

Bit:	31	30	29	28	27	26	25	24	23	22	21	20	19	18	17	16
	EDA[31:16]															
Initial value:	0	0	0	0	0	0	0	0	0	0	0	0	0	0	0	0
R/W(compress):	R/W	R/W	R/W	R/W	R/W	R/W	R/W	R/W	R/W	R/W	R/W	R/W	R/W	R/W	R/W	R/W
R/W(decompress):	Undefined	Undefined	Undefined	Undefined	Undefined	Undefined	Undefined	Undefined	Undefined	Undefined	Undefined	Undefined	Undefined	Undefined	Undefined	Undefined

Bit:	15	14	13	12	11	10	9	8	7	6	5	4	3	2	1	0
	EDA[15:0]															
Initial value:	0	0	0	0	0	0	0	0	0	0	0	0	0	0	0	0
R/W(compress):	R/W	R/W	R/W	R/W	R/W	R/W	R/W	R/W	R/W	R/W	R/W	R/W	R/W	R	R	R
R/W(decompress):	Undefined	Undefined	Undefined	Undefined	Undefined	Undefined	Undefined	Undefined	Undefined	Undefined	Undefined	Undefined	Undefined	Undefined	Undefined	Undefined

Bit	Bit Name	Initial Value	R/W		Description
			Compression	De-compression	
31 to 3	EDA[31:3]	H'0000 0000	R/W	Invalid	Output Coded Data Destination Address (in 8-byte units)
2 to 0	EDA[2:0]		R		The lower three bits should be set to 0.

chanhvinh.com

41.2.22 JPEG Interface Compression Source Line Count Register (JIFESLC)

JIFESLC sets the number of input image data lines when the count mode for stopping the input of image data lines is on (the DINLC bit in JIFECNT is set to 1). This register should be set in 8-line units.

Bit:	31	30	29	28	27	26	25	24	23	22	21	20	19	18	17	16
	—	—	—	—	—	—	—	—	—	—	—	—	—	—	—	—
Initial value:	1	1	1	1	1	1	1	1	1	1	1	1	1	0	0	0
R/W(compress):	R	R	R	R	R	R	R	R	R	R	R	R	R	R	R	R
R/W(decompress):	R	R	R	R	R	R	R	R	R	R	R	R	R	R	R	R

Bit:	15	14	13	12	11	10	9	8	7	6	5	4	3	2	1	0
	LINES[15:0]															
Initial value:	1	1	1	1	1	1	1	1	1	1	1	1	1	0	0	0
R/W(compress):	R/W	R/W	R/W	R/W	R/W	R/W	R/W	R/W	R/W	R/W	R/W	R/W	R/W	R	R	R
R/W(decompress):	Undefined	Undefined	Undefined	Undefined	Undefined	Undefined	Undefined	Undefined	Undefined	Undefined	Undefined	Undefined	Undefined	Undefined	Undefined	Undefined

Bit	Bit Name	Initial Value	R/W: Compression	R/W: De-compression	Description
31 to 16	—	H'FFF8		R	Reserved Values read from these bits are undefined. The write value should always be 0.
15 to 3	LINES[15:3]	H'FFF8	R/W	Invalid	Number of Input Image Data Lines to be Read (in 8-line units)
2 to 0	LINES[2:0]		R		The lower three bits should be set to 0.

chanhvinh.com

41.2.23 JPEG Interface Decompression Control Register (JIFDCNT)

JIFDCNT controls the decompression process.

Bit:	31	30	29	28	27	26	25	24	23	22	21	20	19	18	17	16
	—	—	VINTER[1:0]		HINTER[1:0]		OPF[1:0]		—	—	—	—	—	—	—	—
Initial value:	0	0	0	0	0	0	0	0	0	0	0	0	0	0	0	0
R/W(compress):	R	R	Undefined	Undefined	Undefined	Undefined	Undefined	Undefined	R	R	R	R	R	R	R	R
R/W(decompress):	R	R	R/W	R/W	R/W	R/W	R/W	R/W	R	R	R	R	R	R	R	R

Bit:	15	14	13	12	11	10	9	8	7	6	5	4	3	2	1	0
	—	JINR INI	JINR CMD	JINC	—	JINSWAP[2:0]			—	DOUT RINI	DOUT RCMD	DOUT LD	—	DOUTSWAP[2:0]		
Initial value:	0	0	0	0	0	0	0	0	0	0	0	0	0	0	0	0
R/W(compress):	R	Undefined	Undefined	Undefined	R	Undefined	Undefined	Undefined	R	Undefined	Undefined	Undefined	R	Undefined	Undefined	Undefined
R/W(decompress):	R	R/W	R/W	R/W	R	R/W	R/W	R/W	R	R/W	R/W	R/W	R	R/W	R/W	R/W

Bit	Bit Name	Initial Value	R/W: Compression	R/W: De-compression	Description
31, 30	—	All 0		R	Reserved These bits are always read as 0. The write value should always be 0.
29, 28	VINTER [1:0]	00	Invalid	R/W	Vertical Subsampling Subsamples vertical output image data. 00: No subsampling 01: Subsamples output data into 1/2. 10: Subsamples output data into 1/4. 11: Subsamples output data into 1/8.
27, 26	HINTER [1:0]	00	Invalid	R/W	Horizontal Subsampling Subsamples horizontal output image data. 00: No subsampling 01: Subsamples output data into 1/2. 10: Subsamples output data into 1/4. 11: Subsamples output data into 1/8.

chanhvinh.com

Bit	Bit Name	Initial Value	R/W		Description
			Compression	De-compression	
25, 24	OPF[1:0]	00	Invalid	R/W	Specifies output image data pixel format. 00: YCbCr422 01: ARGB8888 10: RGB565 11: Setting prohibited
23 to 15	—	All 0		R	Reserved These bits are always read as 0. The write value should always be 0.
14	JINRINI	0	Invalid	R/W	Address Initialization when Input Coded Data is Resumed This bit is only valid when the count mode for stopping the input of coded data is on. Set this bit before writing 1 to the data resume command bit. 0: The transfer address is not initialized when the input of coded data is restarted. 1: The transfer address is initialized when the input of coded data is restarted.
13	JINRCMD	0	Invalid	R/W	Input Coded Data Resume Command This bit is valid only when the count mode for stopping the input of coded data is on. Setting this bit to 1 resumes reading input coded data. This bit is always read as 0.
12	JINC	0	Invalid	R/W	Count Mode Setting for Stopping Input Coded Data 0: Count mode for stopping the input of coded data is off. 1: Count mode for stopping the input of coded data is on.

chanhvinh.com

Bit	Bit Name	Initial Value	R/W		Description
			Compression	De-compression	
11	—	0		R	Reserved This bit is always read as 0. The write value should always be 0.
10 to 8	JINSWAP [2:0]	000	Invalid	R/W	Byte/Word/Longword Swap Input coded data in decompression is swapped. 000: (1) (2) (3) (4) (5) (6) (7) (8) 001: (2) (1) (4) (3) (6) (5) (8) (7) [Byte swap] 010: (3) (4) (1) (2) (7) (8) (5) (6) [Word swap] 011: (4) (3) (2) (1) (8) (7) (6) (5) [Word - byte swap] 100: (5) (6) (7) (8) (1) (2) (3) (4) [Longword swap] 101: (6) (5) (8) (7) (2) (1) (4) (3) [Longword - byte swap] 110: (7) (8) (5) (6) (3) (4) (1) (2) [Longword - word swap] 111: (8) (7) (6) (5) (4) (3) (2) (1) [Longword - word - byte swap]
7	—	0		R	Reserved This bit is always read as 0. The write value should always be 0.

chanhvinh.com

Bit	Bit Name	Initial Value	R/W		Description
			Compression	De-compression	
6	DOUTRINI	0	Invalid	R/W	Address Initialization when Resuming Output of Image Data Lines This bit is only valid when the count mode for stopping the output of image data lines is on. Set this bit before writing 1 to the data-line resume command bit. 0: The transfer address is not initialized when the output of lines of image data is restarted. 1: The transfer address is initialized when the output of lines of image data is restarted.
5	DOUTRCMD	0	Invalid	R/W	Output Image Data Lines Resume Command This bit is valid only when the count mode for stopping the output of image data lines is on. Setting this bit to 1 resumes writing image data. This bit is always read as 0.
4	DOUTLC	0	Invalid	R/W	Count Mode for Stopping Output Image Data Lines 0: Count mode for stopping the output of image data lines is off. 1: Count mode for stopping the output of image data lines is on.
3	—	0		R	Reserved This bit is always read as 0. The write value should always be 0.

chanhvinh.com

Bit	Bit Name	Initial Value	R/W		Description
			Compression	De-compression	
2 to 0	DOUTSWAP [2:0]	000	Invalid	R/W	Byte/Word Swap Output image data in decompression is swapped. 000: (1) (2) (3) (4) (5) (6) (7) (8) 001: (2) (1) (4) (3) (6) (5) (8) (7) [Byte swap] 010: (3) (4) (1) (2) (7) (8) (5) (6) [Word swap] 011: (4) (3) (2) (1) (8) (7) (6) (5) [Word - byte swap] 100: (5) (6) (7) (8) (1) (2) (3) (4) [Longword swap] 101: (6) (5) (8) (7) (2) (1) (4) (3) [Longword - byte swap] 110: (7) (8) (5) (6) (3) (4) (1) (2) [Longword - word swap] 111: (8) (7) (6) (5) (4) (3) (2) (1) [Longword - word - byte swap]

chanhvinh.com

41.2.24 JPEG Interface Decompression Source Address Register (JIFDSA)

JIFDSA sets the source address of the input coded data. This register should be set in 8-byte units.

Bit:	31	30	29	28	27	26	25	24	23	22	21	20	19	18	17	16
	DSA[31:16]															
Initial value:	0	0	0	0	0	0	0	0	0	0	0	0	0	0	0	0
R/W(compress):	Undefined	Undefined	Undefined	Undefined	Undefined	Undefined	Undefined	Undefined	Undefined	Undefined	Undefined	Undefined	Undefined	Undefined	Undefined	Undefined
R/W(decompress):	R/W	R/W	R/W	R/W	R/W	R/W	R/W	R/W	R/W	R/W	R/W	R/W	R/W	R/W	R/W	R/W

Bit:	15	14	13	12	11	10	9	8	7	6	5	4	3	2	1	0
	DSA[15:0]															
Initial value:	0	0	0	0	0	0	0	0	0	0	0	0	0	0	0	0
R/W(compress):	Undefined	Undefined	Undefined	Undefined	Undefined	Undefined	Undefined	Undefined	Undefined	Undefined	Undefined	Undefined	Undefined	Undefined	Undefined	Undefined
R/W(decompress):	R/W	R/W	R/W	R/W	R/W	R/W	R/W	R/W	R/W	R/W	R/W	R/W	R/W	R	R	R

			R/W		
Bit	Bit Name	Initial Value	Compression	De-compression	Description
31 to 3	DSA[31:3]	H'0000 0000	Invalid	R/W	Input Coded Data Source Address (in 8-byte units)
2 to 0	DSA[2:0]			R	The lower three bits should be set to 0.

chanhvinh.com

41.2.25 JPEG Interface Decompression Line Offset Register (JIFDDOFST)

JIFDDOFST sets the line offset of the output image data to be transferred to the external buffer (refer to section 41.3.4, Storing Image Data). This register should be set in 8-byte units.

Bit:	31	30	29	28	27	26	25	24	23	22	21	20	19	18	17	16
	—	—	—	—	—	—	—	—	—	—	—	—	—	—	—	—
Initial value:	0	0	0	0	0	0	0	0	0	0	0	0	0	0	0	0
R/W(compress):	R	R	R	R	R	R	R	R	R	R	R	R	R	R	R	R
R/W(decompress):	R	R	R	R	R	R	R	R	R	R	R	R	R	R	R	R

Bit:	15	14	13	12	11	10	9	8	7	6	5	4	3	2	1	0
	—	DDMW[14:0]														
Initial value:	0	0	0	0	0	0	0	0	0	0	0	0	0	0	0	0
R/W(compress):	R	Undefined	Undefined	Undefined	Undefined	Undefined	Undefined	Undefined	Undefined	Undefined	Undefined	Undefined	Undefined	Undefined	Undefined	Undefined
R/W(decompress):	R	R/W	R/W	R/W	R/W	R/W	R/W	R/W	R/W	R/W	R/W	R/W	R/W	R	R	R

Bit	Bit Name	Initial Value	R/W: Compression	R/W: De-compression	Description
31 to 15	—	All 0		R	Reserved These bits are always read as 0. The write value should always be 0.
14 to 3	DDMW[14:3]	H'0000	Invalid	R/W	Output Image Data Lines Offset (in 8-byte units)
2 to 0	DDMW[2:0]			R	The lower three bits should be set to 0.

chanhvinh.com

41.2.26 JPEG Interface Decompression Destination Address Register (JIFDDA)

JIFDDA sets the destination address of the output image data. This register should be set in 8-byte units.

Bit:	31	30	29	28	27	26	25	24	23	22	21	20	19	18	17	16
	DDA[31:16]															
Initial value:	0	0	0	0	0	0	0	0	0	0	0	0	0	0	0	0
R/W(compress):	Undefined	Undefined	Undefined	Undefined	Undefined	Undefined	Undefined	Undefined	Undefined	Undefined	Undefined	Undefined	Undefined	Undefined	Undefined	Undefined
R/W(decompress):	R/W	R/W	R/W	R/W	R/W	R/W	R/W	R/W	R/W	R/W	R/W	R/W	R/W	R/W	R/W	R/W

Bit:	15	14	13	12	11	10	9	8	7	6	5	4	3	2	1	0
	DDA[15:0]															
Initial value:	0	0	0	0	0	0	0	0	0	0	0	0	0	0	0	0
R/W(compress):	Undefined	Undefined	Undefined	Undefined	Undefined	Undefined	Undefined	Undefined	Undefined	Undefined	Undefined	Undefined	Undefined	Undefined	Undefined	Undefined
R/W(decompress):	R/W	R/W	R/W	R/W	R/W	R/W	R/W	R/W	R/W	R/W	R/W	R/W	R/W	R	R	R

Bit	Bit Name	Initial Value	R/W: Compression	R/W: De-compression	Description
31 to 3	DDA[31:3]	H'0000 0000	Invalid	R/W	Output Image Data Destination Address (in 8-byte units)
2 to 0	DDA[2:0]			R	The lower three bits should be set to 0.

chanhvinh.com

41.2.27 JPEG Interface Decompression Source Data Count Register (JIFDSDC)

JIFDSDC sets the amount of input coded data when the count mode for stopping the input of coded data is on (the JINC bit in JIFDCNT is set to 1). This register should be set in 8-byte units.

Bit:	31	30	29	28	27	26	25	24	23	22	21	20	19	18	17	16
	—	—	—	—	—	—	—	—	—	—	—	—	—	—	—	—
Initial value:	1	1	1	1	1	1	1	1	1	1	1	1	1	0	0	0
R/W(compress):	R	R	R	R	R	R	R	R	R	R	R	R	R	R	R	R
R/W(decompress):	R	R	R	R	R	R	R	R	R	R	R	R	R	R	R	R

Bit:	15	14	13	12	11	10	9	8	7	6	5	4	3	2	1	0
	JDATAS[15:0]															
Initial value:	1	1	1	1	1	1	1	1	1	1	1	1	1	0	0	0
R/W(compress):	Undefined	Undefined	Undefined	Undefined	Undefined	Undefined	Undefined	Undefined	Undefined	Undefined	Undefined	Undefined	Undefined	Undefined	Undefined	Undefined
R/W(decompress):	R/W	R/W	R/W	R/W	R/W	R/W	R/W	R/W	R/W	R/W	R/W	R/W	R/W	R	R	R

Bit	Bit Name	Initial Value	R/W: Compression	R/W: De-compression	Description
31 to 16	—	H'FFF8	R		Reserved Values read from these bits are undefined. The write value should always be 0.
15 to 3	JDATAS[15:3]	H'FFF8	Invalid	R/W	Amount of Input Coded Data to be Read (in 8-byte units)
2 to 0	JDATAS[2:0]			R	The lower three bits should be set to 0.

chanhvinh.com

41.2.28 JPEG Interface Decompression Destination Line Count Register (JIFDDLC)

JIFDDLC sets the number of output image data lines when the count mode for stopping the output of image data lines is on (the DOUTLC bit in JIFECNT is set to 1). This register should be set such that that the output image data line count matches the MCU unit.

Bit:	31	30	29	28	27	26	25	24	23	22	21	20	19	18	17	16
	—	—	—	—	—	—	—	—	—	—	—	—	—	—	—	—
Initial value:	1	1	1	1	1	1	1	1	1	1	1	1	1	0	0	0
R/W(compress):	R	R	R	R	R	R	R	R	R	R	R	R	R	R	R	R
R/W(decompress):	R	R	R	R	R	R	R	R	R	R	R	R	R	R	R	R

Bit:	15	14	13	12	11	10	9	8	7	6	5	4	3	2	1	0
	LINES[15:0]															
Initial value:	1	1	1	1	1	1	1	1	1	1	1	1	1	0	0	0
R/W(compress):	Undefined	Undefined	Undefined	Undefined	Undefined	Undefined	Undefined	Undefined	Undefined	Undefined	Undefined	Undefined	Undefined	Undefined	Undefined	Undefined
R/W(decompress):	R/W	R/W	R/W	R/W	R/W	R/W	R/W	R/W	R/W	R/W	R/W	R/W	R/W	R	R	R

Bit	Bit Name	Initial Value	R/W: Compression	R/W: De-compression	Description
31 to 16	—	H'FFF8		R	Reserved Values read from these bits are undefined. The write value should always be 0.
15 to 3	LINES[15:3]	H'FFF8	Invalid	R/W	Set these bits to specify the number of lines of output image data to be written. Use a setting value such that that the output image data line count matches the MCU unit. For YCbCr444, YCbCr422, and YCbCr411 output, the setting value × 1 is equal to the output image data line count. For YCbCr420 output, the setting value × 2 is equal to the output image data line count. The lower three bits should be set to 0.
2 to 0	LINES[2:0]			R	

chanhvinh.com

41.2.29 JPEG Interface Decompression α Set Register (JIFDADT)

JIFDADT is used to set the α value when output is in ARGB8888 format.

Bit:	31	30	29	28	27	26	25	24	23	22	21	20	19	18	17	16
	—	—	—	—	—	—	—	—	—	—	—	—	—	—	—	—
Initial value:	0	0	0	0	0	0	0	0	0	0	0	0	0	0	0	0
R/W(compress):	R	R	R	R	R	R	R	R	R	R	R	R	R	R	R	R
R/W(decompress):	R	R	R	R	R	R	R	R	R	R	R	R	R	R	R	R

Bit:	15	14	13	12	11	10	9	8	7	6	5	4	3	2	1	0
	—	—	—	—	—	—	—	—	ALPHA[7:0]							
Initial value:	0	0	0	0	0	0	0	0	0	0	0	0	0	0	0	0
R/W(compress):	R	R	R	R	R	R	R	R	Undefined	Undefined	Undefined	Undefined	Undefined	Undefined	Undefined	Undefined
R/W(decompress):	R	R	R	R	R	R	R	R	R/W	R/W	R/W	R/W	R/W	R/W	R/W	R/W

Bit	Bit Name	Initial Value	R/W: Compression	R/W: De-compression	Description
31 to 8	—	All 0	R		Reserved These bits are always read as 0. The write value should always be 0.
7 to 0	ALPHA [7:0]	H'00	Invalid	R/W	Setting of the α value for output in ARGB8888 format.

chanhvinh.com

41.2.30 JPEG Interrupt Enable Register 1 (JINTE1)

JINTE1 enables interrupts.

Bit:	31	30	29	28	27	26	25	24	23	22	21	20	19	18	17	16
	—	—	—	—	—	—	—	—	—	—	—	—	—	—	—	—
Initial value:	0	0	0	0	0	0	0	0	0	0	0	0	0	0	0	0
R/W(compress):	R	R	R	R	R	R	R	R	R	R	R	R	R	R	R	R
R/W(decompress):	R	R	R	R	R	R	R	R	R	R	R	R	R	R	R	R

Bit:	15	14	13	12	11	10	9	8	7	6	5	4	3	2	1	0
	—	—	—	—	—	—	—	—	—	CBTEN	DINLEN	—	—	DBTEN	JINEN	DOUTLE
Initial value:	0	0	0	0	0	0	0	0	0	0	0	0	0	0	0	0
R/W(compress):	R	R	R	R	R	R	R	R	R	R/W	R/W	R	R	Undefined	Undefined	Undefined
R/W(decompress):	R	R	R	R	R	R	R	R	R	Undefined	Undefined	R	R	R/W	R/W	R/W

Bit	Bit Name	Initial Value	R/W: Compression	R/W: De-compression	Description
31 to 7	—	All 0		R	Reserved These bits are always read as 0. The write value should always be 0.
6	CBTEN	0	R/W	Invalid	Enables or disables a data transfer processing interrupt request (JDTI) when the CBTF bit in JINTS1 is set to 1. 0: Disables an interrupt request. 1: Enables an interrupt request.
5	DINLEN	0	R/W	Invalid	Enables or disables a data transfer processing interrupt request (JDTI) when the DINLF bit in JINTS1 is set to 1. 0: Disables an interrupt request. 1: Enables an interrupt request.
4, 3	—	All 0		R	Reserved These bits are always read as 0. The write value should always be 0.
2	DBTEN	0	Invalid	R/W	Enables or disables a data transfer processing interrupt request (JDTI) when the DBTF bit in JINTS1 is set to 1. 0: Disables an interrupt request. 1: Enables an interrupt request.

chanhvinh.com

Bit	Bit Name	Initial Value	R/W		Description
			Compression	De-compression	
1	JINEN	0	Invalid	R/W	Enables or disables a data transfer processing interrupt request (JDTI) when the JINF bit in JINTS1 is set to 1. 0: Disables an interrupt request. 1: Enables an interrupt request.
0	DOUTLEN	0	Invalid	R/W	Enables or disables a data transfer processing interrupt request (JDTI) when the DOUTLF bit in JINTS1 is set to 1. 0: Disables an interrupt request. 1: Enables an interrupt request.

chanhvinh.com

41.2.31 JPEG Interrupt Status Register 1 (JINTS1)

JINTS1 indicates the interrupt sources.

The interrupt sources of this register should be cleared by writing 0 to this register.

Bit:	31	30	29	28	27	26	25	24	23	22	21	20	19	18	17	16
	—	—	—	—	—	—	—	—	—	—	—	—	—	—	—	—
Initial value:	0	0	0	0	0	0	0	0	0	0	0	0	0	0	0	0
R/W(compress):	R	R	R	R	R	R	R	R	R	R	R	R	R	R	R	R
R/W(decompress):	R	R	R	R	R	R	R	R	R	R	R	R	R	R	R	R

Bit:	15	14	13	12	11	10	9	8	7	6	5	4	3	2	1	0
	—	—	—	—	—	—	—	—	—	CBTF	DINLF	—	—	DBTF	JINF	DOU TLF
Initial value:	0	0	0	0	0	0	0	0	0	0	0	0	0	0	0	0
R/W(compress):	R	R	R	R	R	R	R	R	R	R/W*	R/W*	R	R	Undefined	Undefined	Undefined
R/W(decompress):	R	R	R	R	R	R	R	R	R	Undefined	Undefined	R	R	R/W*	R/W*	R/W*

Note: * When the bit is read as 1, write 0 to clear it.
When the bit is read as 0, write 1 to it.

Bit	Bit Name	Initial Value	R/W: Compression	R/W: De-compression	Description
31 to 7	—	All 0		R	Reserved These bits are always read as 0. The write value should always be 0.
6	CBTF	0	R/W*	Invalid	This bit is set to 1 when the last output coded data is written in compression.
5	DINLF	0	R/W*	Invalid	This bit is set to 1 when the number of input image data lines indicated by JIFESLC is read in compression. This bit is valid only when the DINLC bit in JIFECNT is set to 1.
4, 3	—	All 0		R	Reserved These bits are always read as 0. The write value should always be 0.
2	DBTF	0	Invalid	R/W*	This bit is set to 1 when the last output image data is written in decompression.

chanhvinh.com

Bit	Bit Name	Initial Value	R/W		Description
			Compression	De-compression	
1	JINF	0	Invalid	R/W*	This bit is set to 1 when the amount of input coded data indicated by JIFDSDC is read in decompression. This bit is valid only when the JINC bit in JIFDCNT is set to 1.
0	DOUTLF	0	Invalid	R/W*	In decompression, this bit is set to 1 when the number of lines of output image data indicated by JIFDDLC have been written. This bit is only valid when the DOUTLC bit in JIFDCNT is set to 1.

Note: * When the bit is read as 1, write 0 to clear it.
When the bit is read as 0, write 1 to it.

chanhvinh.com

41.3 Operation

41.3.1 Compression

(1) Overview of Processing

The compression process flows are described below.

1. The JPEG core is activated.
   A marker is output. (After a marker is output, image data can be input.)
   Approximately 30,000 cycles (necessary for making SOI to SOS markers)
2. Image data is transferred in MCUs from the external buffer to this module.
   If the count mode for stopping the input of image data lines is on, reading is stopped each time the number of lines set in JIFESLC is read. Reading is resumed by setting the DINRCMD bit in JIFECNT to 1.
   When the DINRINI bit in JIFECNT is zero, the addresses for reading on resumption are continued from the addresses in the previous round of transfer.
   When the DINRINI bit is one, the address set in JIFESA is used on resumption.
   Reading is also stopped when one frame of image data is completely transferred.
   If the count mode for stopping the input of image data lines is off, reading is continued until one frame of image data is completely transferred.
3. Image data is input to the JPEG core.
   The input data is processed in MCUs at any time in the JPEG core.
4. Coded data is transferred from this module to the external buffer.
5. Compression is completed after one frame of data is processed completely.

chanhvinh.com

(2) Flowchart (Compression)

(a) Initial Settings

After completing the JPEG core settings and input/output buffer settings and transferring image data to the external buffer, activate this module by setting the JSRT bit in JCCMD to 1. After this module has been activated, the JPEG markers (SOI to SOS) are generated and output. It takes approximately 30,000 cycles to generate the markers.

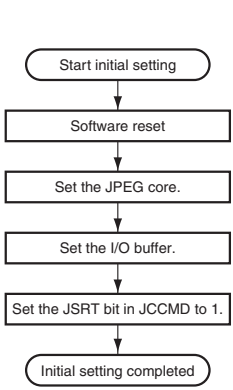

Software reset
Reset this module in advance by setting the JCURST bit in SWRSTCR2 of the power-down modes.

JPEG core settings

Pixel format setting:	REDU bits in JCMOD
Compression setting:	DSP bit in JCMOD
Quantization table number setting:	JCQTN
Huffman table number setting:	JCHTN
DRI setting:	JCDRIU, JCDRID
Vertical image size setting:	JCVSZU, JCVSZD
Horizontal image size setting:	JCHSZU, JCHSZD
Quantization table setting:	JCQTBL0 to JCQTBL3
Huffman table setting:	JCHTBD0, JCHTBD1, JCHTBA0, JCHTBA1

I/O buffer settings

Byte/word/longword swap setting:	JOUTSWAP, DINSWAP bits in JIFECNT
Input data line stop count mode setting:	DINLC bit in JIFECNT
Address initialization setting for resumption of input image data:	DINRINI bit in JIFECNT
Source address setting:	JIFESA
Line offset setting:	JIFESOFST
Destination address setting:	JIFEDA
Source line count setting:	JIFESLC
Interrupt settings:	CBTEN, DINLEN bits in JINTE1

Figure 41.2 Compression Initial Setting Flow

chanhvinh.com

(b) Compression Process

The compression process flows are described below.

- When JPEG compression process has been completed, the INS6 bit in JINTS0 is set to 1. However, this module continues processing since the coded data remains to be transferred. The CBTF bit in JINTS1 is set to 1 when the last coded data is transferred. The interrupt source is cleared by writing 0 to the INS6 bit. However, the interrupt request asserted by this interrupt source cannot be cleared by writing 0 to the INS6 bit. Set an interrupt request clear command (by setting the JEND bit in JCCMD to 1) to clear the interrupt request.
- When this module has completed compression and all coded data has been transferred, the CBTF flag in JINTS1 is set to 1. When the CBTEN bit in JINTE1 is 1 here, an interrupt is generated. The interrupt source is cleared by writing 0 to the CBTF flag.
- If the count mode for stopping image data lines is on, when the specified number of image data lines set in JIFESLC has been read, the DINLF flag in JINTS1 is set to 1, and reading is stopped. When the DINLEN bit in JINTE1 is 1 here, an interrupt is generated. An interrupt source is cleared by writing 0 to the DINLEN bit. Setting the DINRCMD bit in JIFECNT to 1 resumes reading.

  When the DINRINI bit in JIFECNT is zero, the addresses for reading on resumption are continued from the addresses in the previous round of transfer.

  When the DINRINI bit is one, the address set in JIFESA is used on resumption.

(c) Data Correction

When after dividing the output coded data by 8 the remainder is 1 to 6 bytes, transfer of bytes 1 to 6 of the remainder may not complete successfully. If the transfer is unsuccessful, bytes 1 to 6 of the remainder are written to the address specified in the JPEG interface compression destination address register (JIFEDA), overwriting the existing data.*

For this reason it is necessary to check whether the output coded data was transferred successfully and, if not, to perform data correction.

Note: * This module handles the output of coded data in 16-bit units. For this reason, if the coded data has an odd code length, the final code output will be H'D9FF. (H'FF is appended.) When the remainder is 1, 3, or 5 bytes, the remainder data (1, 3, or 5 bytes) + H'FF is written to the address specified in JIFEDA, overwriting the existing data.

chanhvinh.com

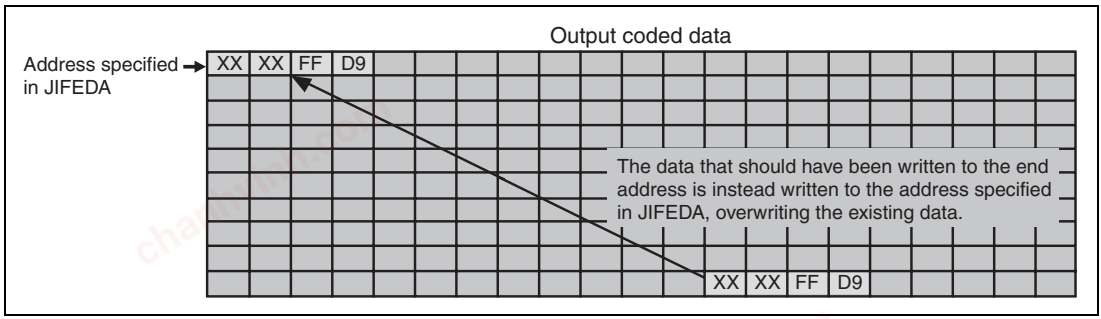

Figure 41.3 Conceptual Diagram of Abnormal Transfer of Output Coded Data

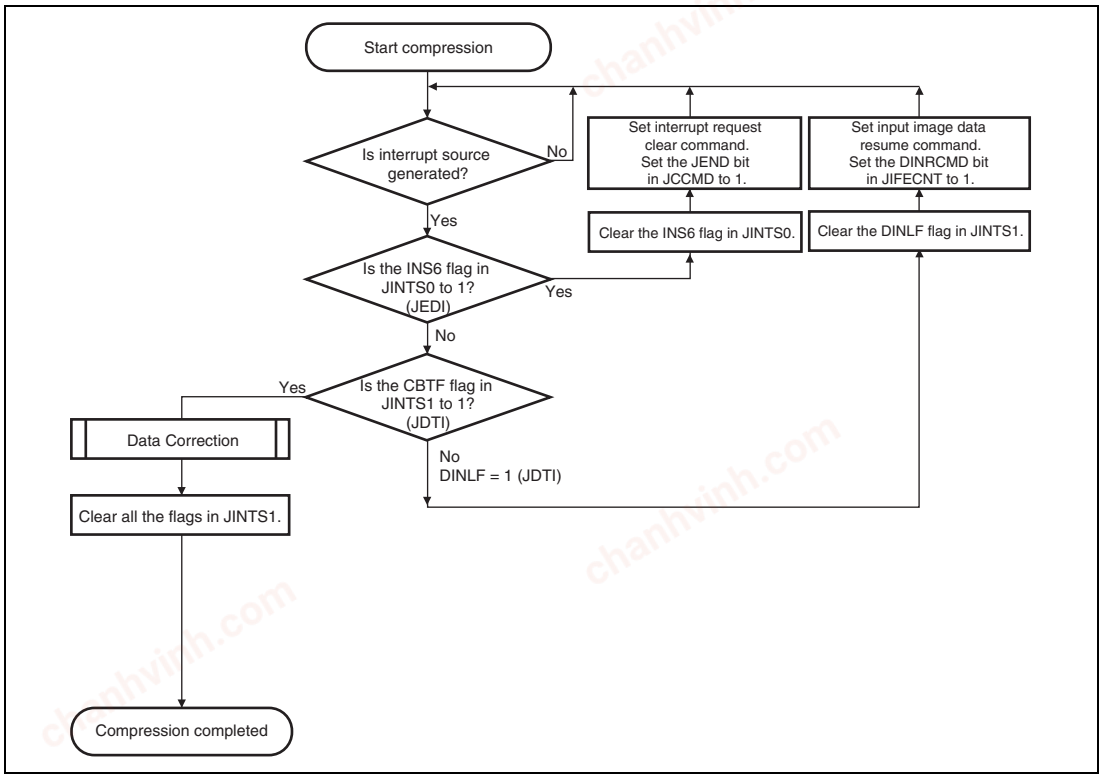

Figure 41.4 Compression Process Flow

chanhvinh.com

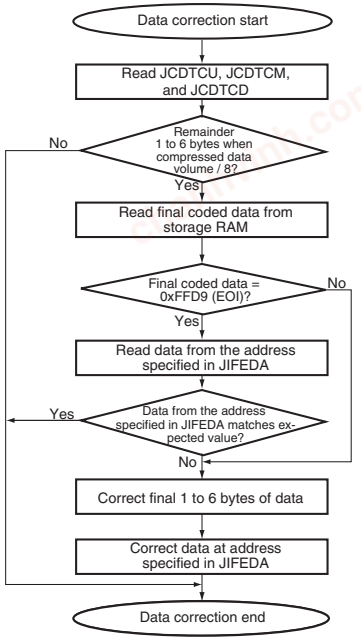

*1 [1] Read the compressed data volume from JCDTCU, JCDTCM, and JCDTCD.

*2 [2] Determine if after dividing the compressed data volume by 8 the remainder is 1 to 6 bytes.

*3 [3] Based on the compressed data volume read in [1], read the data from the address to which the final coded data (0xFFD9) was written.

*4 [4] Determine if the final coded data EOI (0xFFD9) was written.

*5 [5] Read from the address specified in JIFEDA the number of remainder data bytes calculated in [2].

*6 [6] Determine if the data read from the address specified in JIFEDA matches the expected value. This will be the beginning of the JPEG data, so the expected value will be 0xFFD8 (SIO), 0xFFDB (DQT), 0x00XX (XX: 0x84 for quantization table 2, 0xC5 for quantization table 3)

*7 [7] If transfer did not complete successfully, write the 1 to 6 bytes read in [6] to the end address.

*8 [8] Some data has been overwritten, so correct the data at the address specified in JIFEDA.

Note: If the coded data has an odd code length, the final code output will be H'D9FF. (H'FF is appended.) Therefore, when the remainder is 1, 3, or 5 bytes, is should be corrected to 2, 4, or 6 bytes of data, respectively.

Figure 41.5 Data Correction Flowchart

chanhvinh.com

(3) JPEG Coded Data Format

Figure 41.6 shows the data output stream in compression. The amount of coded data from SOI to EOI is indicated by JCDTCU, JCDTCM, and JCDTCD. When both JCDRIU and JCDRID are set to H'0000 0000, the following markers are not output.

- DRI marker
- RST marker (in compressed image data)

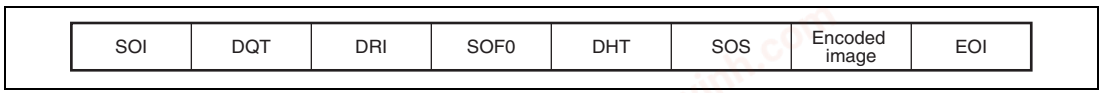

Figure 41.6 JPEG Coded Data Format

DQT: Not output for unused table.

DHT: Output in order DC0, AC0, DC1, and AC1. Not output for unused table.

SOF0: Component identifiers are C1 = first color component, C2 = second color component, and C3 = third color component.

SOS: Scan component selectors are CS1 = first color component, CS2 = second color component, and CS3 = third color component.

Header Volume (Reference):

- SOI: 2 bytes (FFD8)
- DQT: 134 bytes when two quantization tables are used, 199 bytes when three quantization tables are used (±65 bytes/table increase or decrease)
- DRI: 6 bytes
- SOF0: 19 bytes (4:2:2)
- DHT: 420 bytes (two tables are used)
- SOS: 14 bytes (4:2:2)
- EOI: 2 bytes (FFD9)

chanhvinh.com

(4) Table Setting

(a) Quantization Table Specification

The order of addresses shown in 8 × 8 blocks corresponds to that of the register addresses. Do not access this table while this module is in processing.

Table 41.2 Quantization Table

00	01	02	03	04	05	06	07
08	09	0A	0B	0C	0D	0E	0F
10	11	12	13	14	15	16	17
18	19	1A	1B	1C	1D	1E	1F
20	21	22	23	24	25	26	27
28	29	2A	2B	2C	2D	2E	2F
30	31	32	33	34	35	36	37
38	39	3A	3B	3C	3D	3E	3F

JCQTBL0 (H'E801 7100) = H'00
JCQTBL0 (H'E801 7101) = H'01
JCQTBL0 (H'E801 7102) = H'02
JCQTBL0 (H'E801 7103) = H'03
:
JCQTBL0 (H'E801 713F) = H'3F

(b) Huffman Table Specification

Examples of the Huffman table specification given in the ITU-T T81 Annex K.3.3 recommended by JPEG are shown below. In compression, the following settings must be specified for all the codes so that Huffman codes can be generated for all the group numbers.

- DC Huffman table: The number of codes for each code length is 12.
  The group numbers in order of frequency of occurrence are 12.
- AC Huffman table: The number of codes for each code length is 162.
  The zero run length/the group numbers in order of frequency of occurrence are 162.

Do not access the following tables while this module is in processing. In particular, read access is prohibited.

chanhvinh.com

- Table K.3/T81
  JCHTBD0 (H'E801 7200) = H'00
  JCHTBD0 (H'E801 7201) = H'01
  JCHTBD0 (H'E801 7202) = H'05
  JCHTBD0 (H'E801 7203) = H'01
  :
  JCHTBD0 (H'E801 721B) = H'0B

- Table K.4/T81
  JCHTBD1 (H'E801 7300) = H'00
  JCHTBD1 (H'E801 7301) = H'03
  JCHTBD1 (H'E801 7302) = H'01
  JCHTBD1 (H'E801 7303) = H'01
  :
  JCHTBD1 (H'E801 731B) = H'0B

- Table K.5/T81
  JCHTBA0 (H'E801 7220) = H'00
  JCHTBA0 (H'E801 7221) = H'02
  JCHTBA0 (H'E801 7222) = H'01
  JCHTBA0 (H'E801 7223) = H'03
  :
  JCHTBA0 (H'E801 72D1) = H'FA

- Table K.6/T81
  JCHTBA1 (H'E801 7320) = H'00
  JCHTBA1 (H'E801 7321) = H'02
  JCHTBA1 (H'E801 7322) = H'01
  JCHTBA1 (H'E801 7323) = H'02
  :
  JCHTBA1 (H'E801 73D1) = H'FA

chanhvinh.com

(5) Input Pixel Format

Image data in the YCbCr422 format can be input to this module. Allocation of data in the YCbCr422 format can be changed by the DINSWAP bits in JIFECNT as shown below.

- When the DINSWAP bits = 000

b63 b56	b55 b48	b47 b40	b39 b32	b31 b24	b23 b16	b15 b8	b7 b0
Y0 8 bits	Cb0 8 bits	Y1 8 bits	Cr0 8 bits	Y2 8 bits	Cb1 8 bits	Y3 8 bits	Cr1 8 bits

- When the DINSWAP bits = 001

b63 b56	b55 b48	b47 b40	b39 b32	b31 b24	b23 b16	b15 b8	b7 b0
Cb0 8 bits	Y0 8 bits	Cr0 8 bits	Y1 8 bits	Cb1 8 bits	Y2 8 bits	Cr1 8 bits	Y3 8 bits

- When the DINSWAP bits = 010

b63 b56	b55 b48	b47 b40	b39 b32	b31 b24	b23 b16	b15 b8	b7 b0
Y1 8 bits	Cr0 8 bits	Y0 8 bits	Cb0 8 bits	Y3 8 bits	Cr1 8 bits	Y2 8 bits	Cb1 8 bits

- When the DINSWAP bits = 100

b63 b56	b55 b48	b47 b40	b39 b32	b31 b24	b23 b16	b15 b8	b7 b0
Y2 8 bits	Cb1 8 bits	Y3 8 bits	Cr1 8 bits	Y0 8 bits	Cb0 8 bits	Y1 8 bits	Cr0 8 bits

- When the DINSWAP bits = 101

b63 b56	b55 b48	b47 b40	b39 b32	b31 b24	b23 b16	b15 b8	b7 b0
Cb1 8 bits	Y2 8 bits	Cr1 8 bits	Y3 8 bits	Cb0 8 bits	Y0 8 bits	Cr0 8 bits	Y1 8 bits

- When the DINSWAP bits = 110

b63 b56	b55 b48	b47 b40	b39 b32	b31 b24	b23 b16	b15 b8	b7 b0
Y3 8 bits	Cr1 8 bits	Y2 8 bits	Cb1 8 bits	Y1 8 bits	Cr0 8 bits	Y0 8 bits	Cb0 8 bits

- When the DINSWAP bits = 111

b63 b56	b55 b48	b47 b40	b39 b32	b31 b24	b23 b16	b15 b8	b7 b0
Cr1 8 bits	Y3 8 bits	Cb1 8 bits	Y2 8 bits	Cr0 8 bits	Y1 8 bits	Cb0 8 bits	Y0 8 bits

chanhvinh.com

(6) Output Coded Data

In the case of compression, coded data are output. This module handles the output of coded data in 16-bit units. For this reason, if the coded data have an odd code length (are fractional), the final code for output will be H'D9FF.

The JOUTSWAP bits in JIFECNT can be used to alter the arrangement of coded data in the output.

chanhvinh.com

41.3.2 Decompression

(1) Overview of Processing

The decompression process flows are described below.

1. The JPEG core is activated.
2. Coded data is transferred from the external buffer to this module.

   If the count mode for stopping the input of coded data is on, reading is stopped each time the amount of coded data set in JIFDSLC is read. Reading is resumed by setting the JINRCMD bit in JIFDCNT to 1. When the JINRINI bit in JIFDCNT is zero, the addresses for reading on resumption are continued from the addresses in the previous round of transfer.

   When the JINRINI bit is one, the address set in JIFDSA is used on resumption. Reading is stopped when the end of the coded data is detected.

   If the count mode for stopping the input of coded data is off, reading is continued until the end of code is detected.

   With this module, more coded data may be read than the coded data size since coded data reading is continued until the end of code is detected.
3. Coded data is input to the JPEG core.

   The input data is processed in MCUs at any time in the JPEG core.
4. Image data is transferred in MCUs from this module to the external buffer.

   When the count mode for stopping the output of image data lines is on, writing is stopped each time the number of image data lines set in JIFDDLC is written. Writing is resumed by setting the DOUTRCMD bit in JIFECNT to 1.

   When the DOUTRINI bit in JIFDCNT is zero, the addresses for writing on resumption are continued from the addresses in the previous round of transfer.

   When the DOUTRINI bit is one, the address set in JIFDDA is used on resumption. Writing is stopped when one frame of image data is completely transferred.

   If the count mode for stopping the output of image data lines is off, writing is continued until one frame of image data is completely transferred.
5. Decompression is completed after one frame of data is processed completely.

chanhvinh.com

(a) Initial Settings

- When the INT3 bit in JINTE0 is set to 0:

  After completing the JPEG core settings and input/output buffer settings and transferring coded data to the external buffer, activate this module by setting the JSRT bit in JCCMD to 1.
- When the INT3 bit in JINTE0 is set to 1:

  After completing the JPEG core settings and input buffer settings and transferring coded data to the external buffer, activate this module by setting the JSRT bit in JCCMD to 1.

  When the image size and pixel format become readable after the coded data has been decompressed, the INS3 bit in JINTS0 is set. At this time, decompression is temporarily stopped.

  After the image size and pixel format have been read, set the output buffer.

  Setting the JRST bit in JCCMD to 1 after interrupt handling resumes decompression.

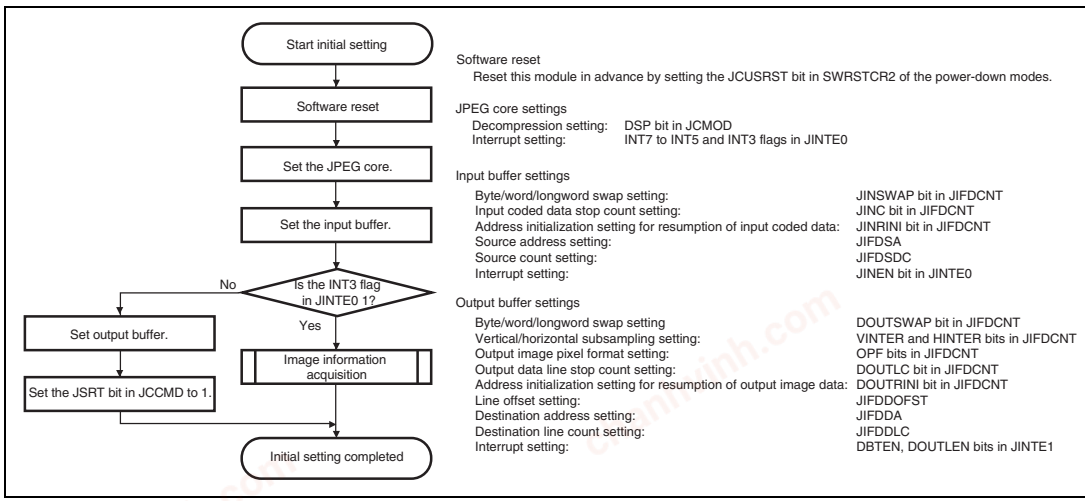

Figure 41.7 Decompression Initial Setting Flow

chanhvinh.com

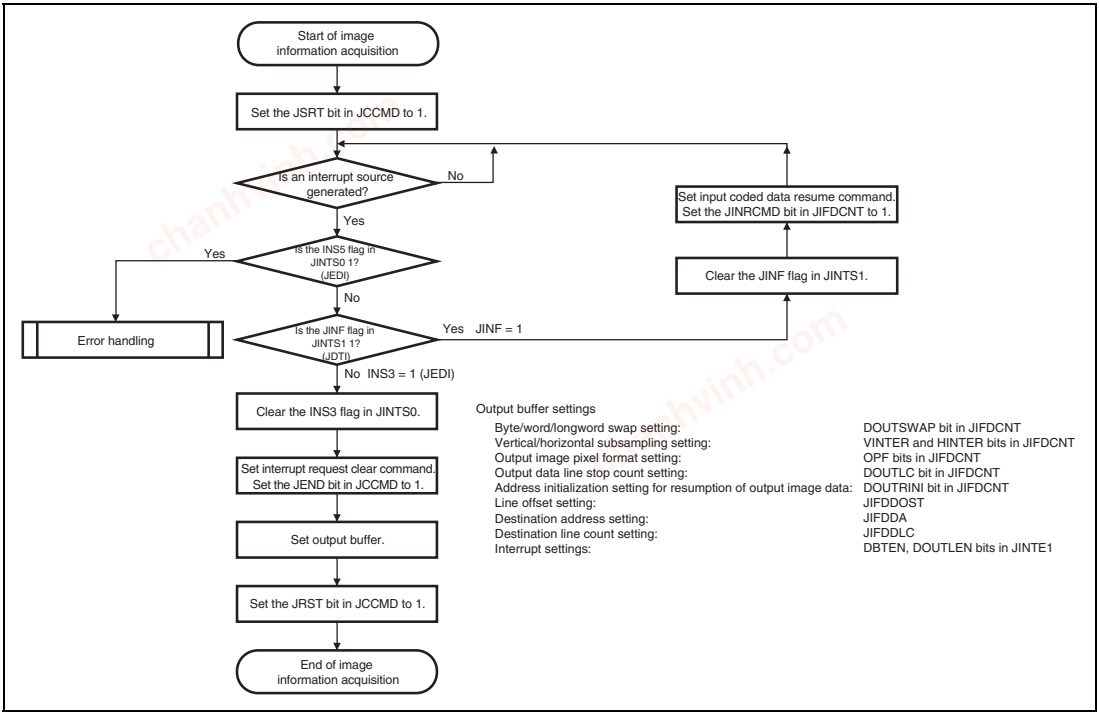

Figure 41.8 Image Information Acquisition Flow

chanhvinh.com

(b) Decompression Process

The decompression process flows are described below.

- When JPEG decompression process has been completed, the INS6 bit in JINTS0 is set to 1. However, this module continues processing since the image data remains to be transferred. The DBTF bit in JINTS1 is set to 1 when the last image data is transferred. The interrupt source is cleared by writing 0 to the INS6 bit. However, the interrupt request asserted by this interrupt source cannot be cleared by writing 0 to the INS6 bit. Set an interrupt request clear command (by setting the JEND bit in JCCMD to 1) to clear the interrupt request.
- When this module has completed decompression process and all image data has been transferred, the DBTF flag in JINTS1 is set to 1. When the DBTEN bit in JINTE1 is 1 here, an interrupt is generated. The interrupt source is cleared by writing 0 to the DBTF flag.
- If the count mode for stopping input coded data is on, when the specified amount of coded data set in JIFDSDC have been read, the JINF flag in JINTS1 is set to 1, and reading is stopped. When the JINEN bit in JINTE1 is 1 here, an interrupt is generated. An interrupt source is cleared by writing 0 to the JINF bit. Setting the JINRCMD bit in JIFDCNT to 1 resumes reading.

  When the JINRINI bit in JIFDCNT is zero, the addresses for reading on resumption are continued from the addresses in the previous round of transfer.

  When the JINRINI bit is one, the address set in JIFDSA is used on resumption.
- If the count mode for stopping the output image data is on, when the specified number of image data lines set in JIFDDLC have been written, the DOUTLF flag in JINT1 is set to 1, and writing is stopped. When the DOUTLEN bit in JINTE1 is 1 here, an interrupt is generated. An interrupt source is cleared by writing 0 to the DOUTLF bit. Setting the DOUTRCMD bit in JIFDCNT to 1 resumes writing.

  When the DOUTRINI bit in JIFDCNT is zero, the addresses for writing on resumption are continued from the addresses in the previous round of transfer.

  When the DOUTRINI bit is one, the address set in JIFDDA is used on resumption.

chanhvinh.com

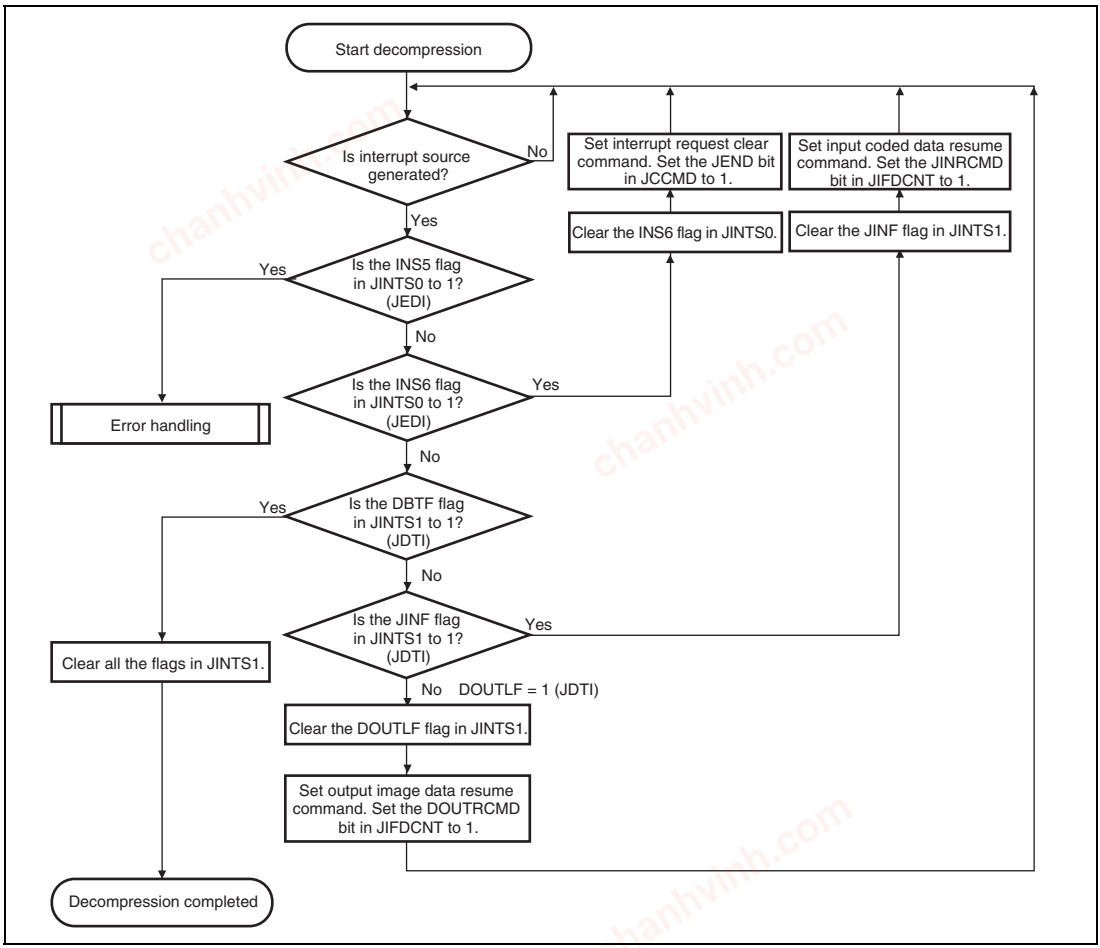

Figure 41.9 Decompression Process Flow

chanhvinh.com

(c) Error Handling

If the INS5 bit in JINTS0 is 1, it indicates that there is an error in the input JPEG coded data and that the decompression process by this module has been ended. Read the ERR bits in JCDERR to determine the cause of the error. The interrupt signal asserted due to the interrupt source indicated by the INS5 bit cannot be negated by clearing the interrupt status through 0-writing. To clear the interrupt request, set the interrupt request clear command (by setting the JEND bit in JCCMD to 1). When performing decompression/compression processing after error handling finishes, start the processing from the initial settings.

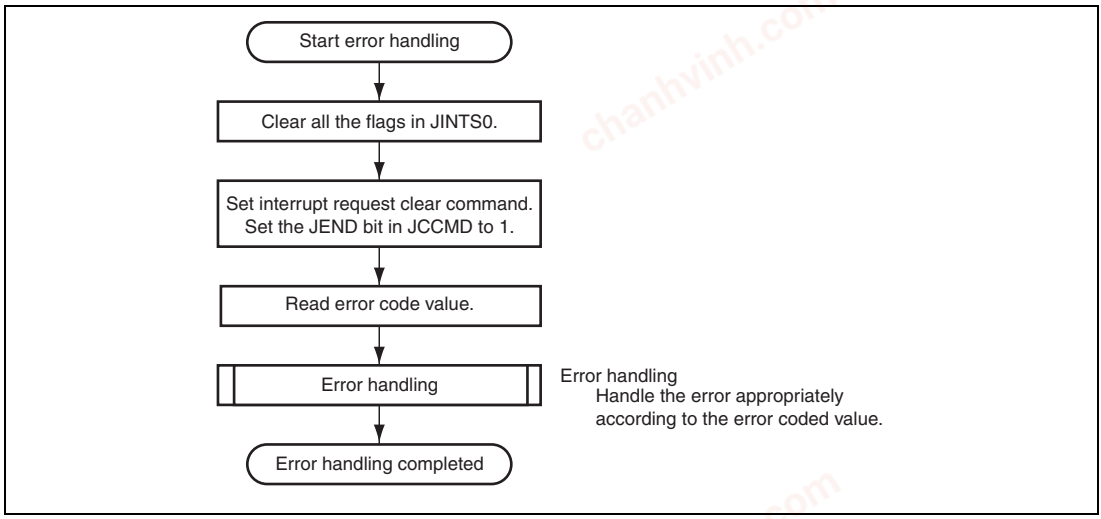

Figure 41.10 Error Handling Flow

(2) Input JPEG Coded Data

Markers to be processed in decompression are SOI, SOF0, SOS, DQT, DHT, DRI, RSTm, and EOI. Other markers except for the error markers shown below are ignored even if they are read.

The JINSWAP bits in JIFDCNT can be used to alter the arrangement for the input of coded data.

chanhvinh.com

(3) JPEG Decompression Errors

(a) Error Marker

If a marker error is found while analyzing compressed data for decompression, the code to identify the error type (shown in table 41.3) is set to ERR bits in JCDERR. When an error is detected, this module generates an interrupt signal and terminates decoding. The stored code value will be set to B'1010 (default value) at the start of processing of the next frame or after a bus reset.

Table 41.3 Decompression Error Codes

Code	Description
B'0000	Normal
B'0001	SOI not detected: SOI not detected until EOI detected
B'0010	SOF1 to SOFF detected
B'0011	Unprovided pixel format detected
B'0100	SOF accuracy error: Other than 8 detected
B'0101	DQT accuracy error: Other than 0 detected
B'0110	Component error 1: The number of SOF0 header components detected is other than 1, 3, or 4
B'0111	Component error 2: The number of components differs between SOF0 header and SOS
B'1000	SOF0, DQT, and DHT not detected when SOS detected
B'1001	SOS not detected: SOS not detected until EOI detected
B'1010	EOI not detected (default)
B'1011	Restart interval data number error detected
B'1100	Image size error detected
B'1101	Last MCU data number error detected
B'1110	Block data number error detected

chanhvinh.com

(b) Huffman Coded Segment Error

During the compressed data analysis in decompression operation, if there is an increase or decrease in the decoded data count due to an error resulting from bit reversal or missing data in the Huffman-coded segment, determine the error type, and set the error code in the ERR bit in JCDERR. Table 41.4 lists the segment error codes. The error code is set, interrupt signal is issued, and the process is ended only if the bits INT7 to INT5 in JINTE0 corresponding to the detected error is set to 1. The set code value will turn to the default value (B'1010) at the start of processing of the next frame or after a bus reset.

However, in this error detection, if an error in the Huffman-coded segment does not result in an alteration in the decoded data count, the error will go undetected.

[Example]

The number of data in a Huffman coded segment with pixel format setting YCbCr422, DRI = 2, X = 80 pixels, and Y = 8 pixels

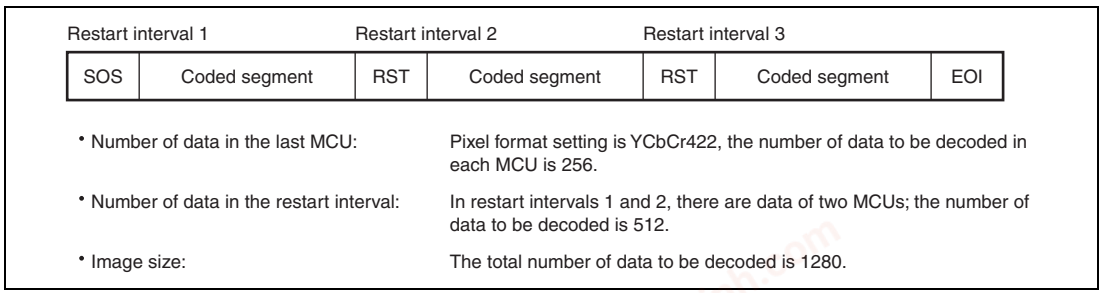

Figure 41.11 Huffman Coded Segment

chanhvinh.com

Table 41.4 Segment Error Codes

Code	Description
B'0000	Normal
B'1011	Restart interval data number error: The number of data in each interval is compared with the number of data specified by the DRI marker. If an interval has more or less data that is specified by the DRI marker, the decompression error code (1011) is set. The last interval which is shorter than the restart interval is not compared. If the DRI marker segment is not placed or the specified number is 00, an error is not detected even if the RSTm marker is placed. Also an m which indicates the order of RSTm marker modulo 8 (m = 0 to 7) is exempt from the error detection analysis. When the INT7 bit in JINTE0 is set to 0, this error is not detected.
B'1100	Image size error: The data number of an image which is calculated from the number of lines specified by the frame parameter and the number of samples per line is compared with the total number of data from SOS to EOI (in pixel units). If the numbers of data do not match, the decompression error code (1100) is set. When the INT6 bit in JINTE0 is set to 0, this error is not detected. The data number of an image is shown in MCU units. Thus the number of lines and the number of samples per line for calculation need to be shown in MCU units.
B'1101	Last MCU data number error: Whether the number of data in the MCUs at the EOI detection is shown in MCU units is checked and fractions are detected. If error (1100) occurs simultaneously, error (1100) has priority. When the INT5 bit in JINTE0 is set to 0, this error is not detected.
B'1110	Block data number error: Whether a block is an 8 × 8 array is checked; the check is performed for fractions. When bits INT7 to INT5 in JINTE0 are all set to 0, this error is not detected.

chanhvinh.com

41.3.3 Output Pixel Format in Decompression

This module is capable of decompressing JPEG encoded data created in the YCbCr444, YCbCr422, YCbCr411, and YCbCr420 formats. The pixel format of the output image will be YCbCr422, ARGB8888, or RGB565. The flow of conversion of decompressed data to the given output pixel format is shown below.

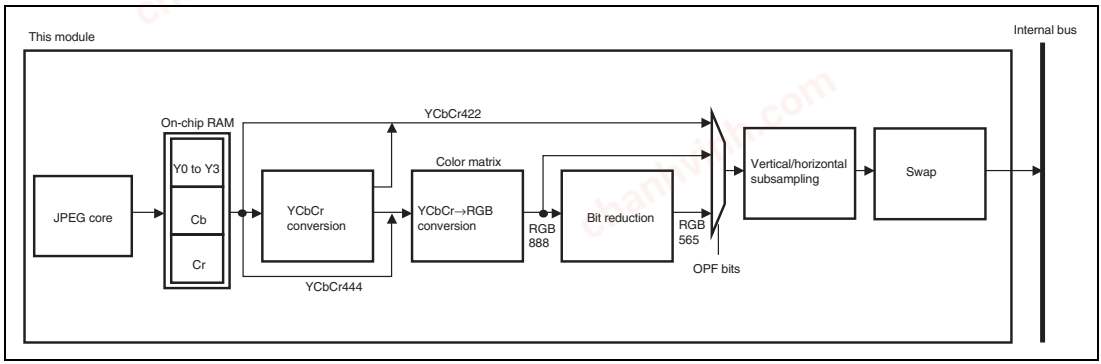

Figure 41.12 Block Diagram of Output Pixel Format Conversion in Decompression

(1) On-chip RAM

Data decoded by the JPEG core are stored in MCUs on RAM in this module.

(2) YCbCr Conversion

When data are to be output in the ARGB8888 or RGB565 format, data in the YCbCr422, YCbCr411, or YCbCr420 format are first converted to the YCbCr444 format.

When data are to be output in the YCbCr422 format, data in the YCbCr444, YCbCr411, or YCbCr420 format are converted to the YCbCr422 format.

Conversion is performed using simple interpolation.

(3) YCbCr → RGB Conversion

Data in the YCbCr444 format are converted to the RGB888 format. The following formulae are used.

R = 1.000Y + 1.402Cr
G = 1.000Y - 0.344Cb - 0.714Cr
B = 1.000Y + 1.772Cb

chanhvinh.com

(4) Bit Reduction

RGB888 data is reduced to RGB565 data. The lower three bits of red and blue, and lower two bits of green are removed.

(5) Output Pixel Format Selection

The pixel format to be output is selected by the OPF bit in JIFDCNT.

Allocation of data (while the DOUTSWAP bits in JIFDCNT = 000) in the pixel format is shown below.

- YCbCr422 (32 bits/pixel)

b31 – b24	b23 – b16	b15 – b8	b7 – b0
Y0 8 bits	Cb 8 bits	Y1 8 bits	Cr 8 bits

- ARGB8888 (32 bits/pixel)

b31 – b24	b23 – b16	b15 – b8	b7 – b0
*	Red 8 bits	Green 8 bits	Blue 8 bits

Note: * This value is determined by the ALPHA[7:0] bits in JIFDADT.

- RGB565 (16 bits/pixel)

b15 – b11	b10 – b5	b4 – b0
Red 5 bits	Green 6 bits	Blue 5 bits

(6) Vertical/Horizontal Subsampling

The output data can be horizontally and vertically subsampled according to the VINTER and HINTER bit setting in JIFDCNT.

Figures 41.13 to 41.15 show line subsampling modes.

For the output formats ARGB8888 and RGB565, one cell represents one pixel in the figures.

For the output format YCbCr422, one cell represents one set of Y0Cb0Y1Cr0 in the figures.

As subsampling is carried out by minimum coded units (MCU), the numbers of the horizontal and vertical block units will vary according to the decompressed pixel format.

chanhvinh.com

Tables 41.5 and 41.6 show the values of n and m in the figures.

Horizontal:

Table 41.5 Number of Horizontal Blocks

Compression Format	Output Format	n
YCbCr444	YCbCr422	1/2
YCbCr444	ARGB8888, RGB565	1
YCbCr422	YCbCr422	1
YCbCr422	ARGB8888, RGB565	2
YCbCr411	YCbCr422	2
YCbCr411	ARGB8888, RGB565	4
YCbCr420	YCbCr422	1
YCbCr420	ARGB8888, RGB565	2

Vertical:

Table 41.6 Number of Vertical Blocks

Compression Format	Output Format	m
YCbCr444	YCbCr422	1
YCbCr444	ARGB8888, RGB565	1
YCbCr422	YCbCr422	1
YCbCr422	ARGB8888, RGB565	1
YCbCr411	YCbCr422	1
YCbCr411	ARGB8888, RGB565	1
YCbCr420	YCbCr422	2
YCbCr420	ARGB8888, RGB565	2

chanhvinh.com

- Subsampling into 1/2
  Even lines are skipped by subsampling.

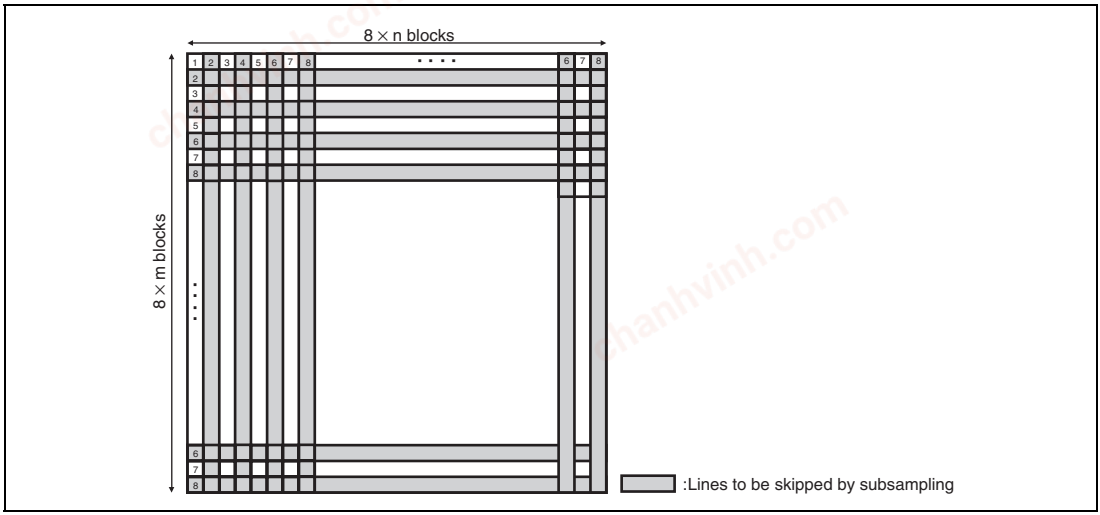

Figure 41.13 MCU when subsampling into 1/2 is selected

- Subsampling into 1/4
  The second, third, and fourth lines are skipped by subsampling.

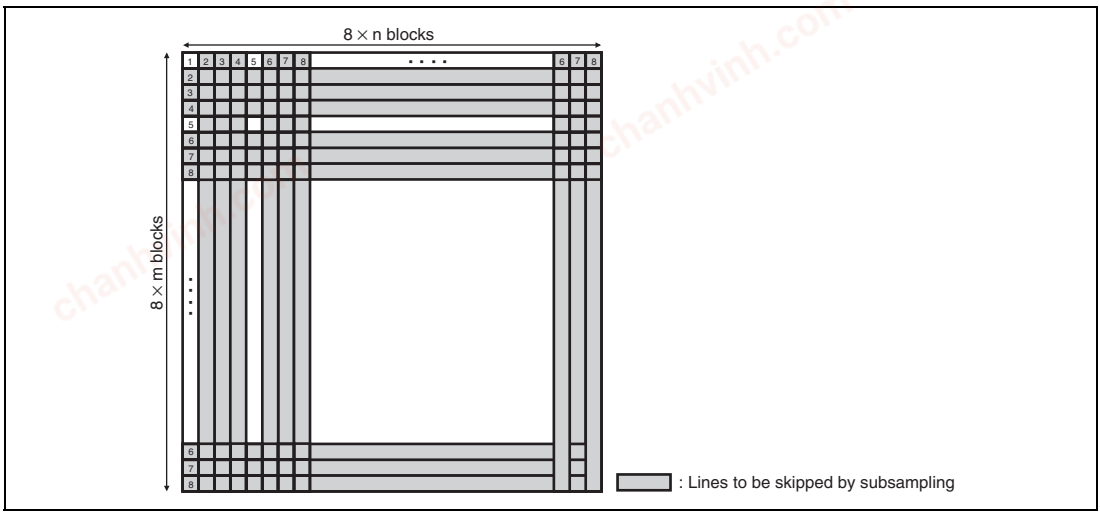

Figure 41.14 MCU when subsampling into 1/4 is selected

chanhvinh.com

- Subsampling into 1/8
  The second, third, fourth, fifth, sixth, seventh, and eighth lines are skipped by subsampling.

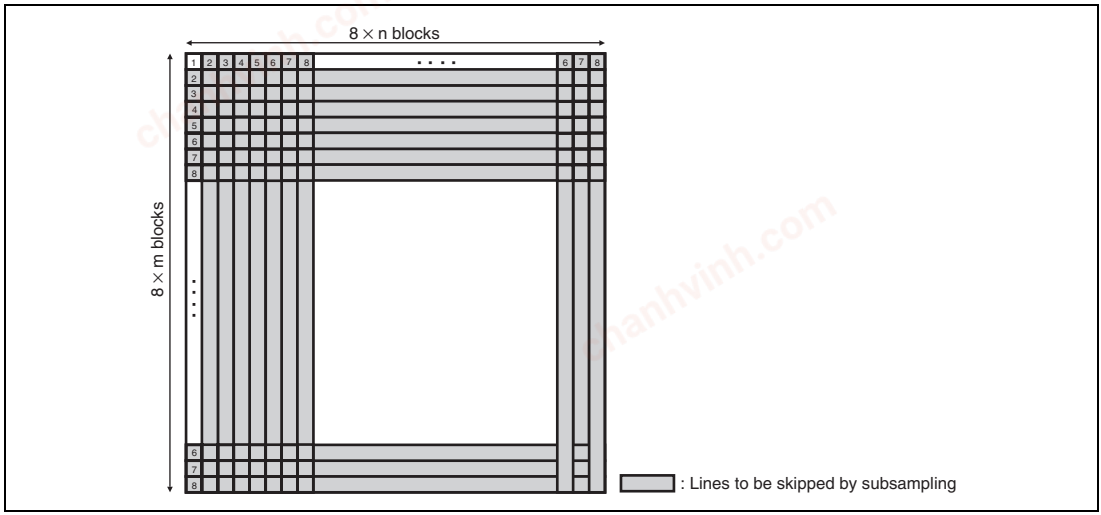

Figure 41.15 MCU when subsampling into 1/8 is selected

(7) Swap

Allocation of data can be changed by the DOUTSWAP bits in JIFECNT.

chanhvinh.com

41.3.4 Storing Image Data

Figure 41.16 shows the buffer area for storing the image data.

- Start address
  Compression: JIFESA
  Decompression: JIFDDA
- Horizontal size
  Compression, decompression: JCHSZU, JCHSZD
- Vertical size
  Compression, decompression: JCVSAU, JCVSZD
- Offset
  Compression: JIFESOFST
  Decompression: JIFDDOFST

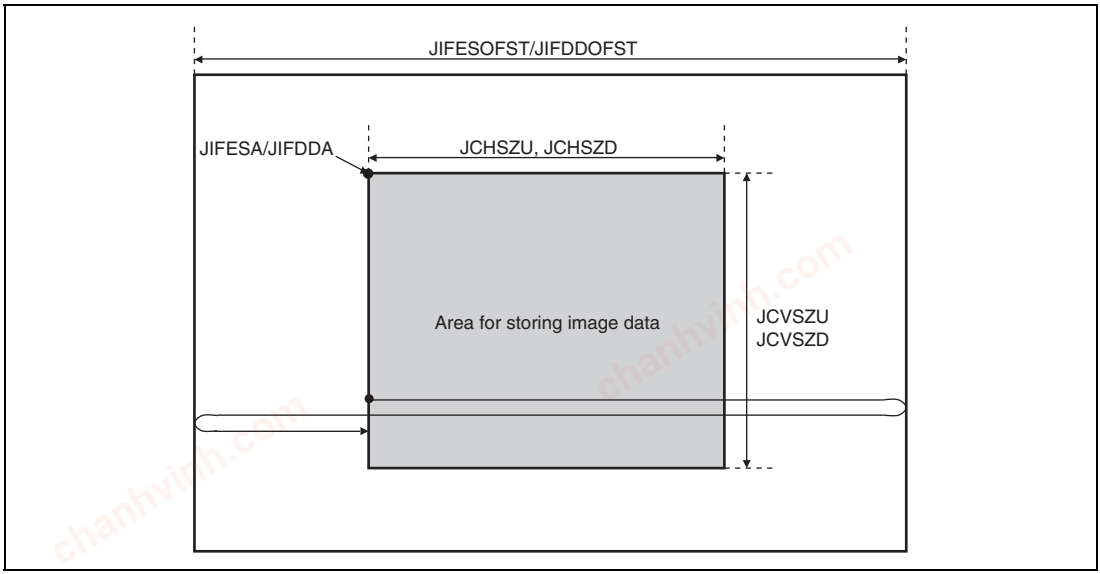

Figure 41.16 Image of Storing Image Data

chanhvinh.com

41.4 Interrupts

Two types of interrupt requests, namely compression/decompression process interrupt request (JEDI) and data transfer interrupt request (JDTI), are available in this module. The two types of interrupt requests are each related to multiple sources. The interrupt request cancellation methods differ depending on the source of the interrupt request.

41.4.1 Compression/Decompression Process Interrupt Request (JEDI)

The flags in JINTS0 indicate compression/decompression-related sources. The interrupt requests asserted by these interrupt sources cannot be negated by clearing the corresponding interrupt status bits to 0. Issue an interrupt request clear command (by setting the JEND bit in JCCMD to 1) to clear the interrupt request. When a flag in JINTS0 is set to 1, a compression/decompression process interrupt request is sent to the interrupt controller.

(1) Compression

- JPEG compression process end

  When the INS6 bit in JINTS0 is 1, the JPEG compression process has been successfully completed. After all of the coded data is transferred, this module completes compression.

(2) Decompression

- JPEG decompression process end

  When the INS6 bit in JINTS0 is 1, the JPEG decompression process has been successfully completed. After all of the image data is transferred, this module completes decompression.
- JPEG decompression error occurrence

  When the INS5 bit in JINTS0 is 1, the input JPEG coded data has an error and this module has stopped the decompression process. Read the error code (ERR bits in JCDERR) and identify the error source. This interrupt occurs when any of the INT7 to INT5 bits in JINTE0 is 1.
- Request for reading the image size and pixel format

  When the INS3 bit in JINTS0 is 1, JPEG coded data has been input and information regarding the image size and pixel format can be read. Since the JPEG decompression process is suspended, resume the JPEG decompression process by setting the process stop clear command after accessing the necessary registers. This interrupt occurs when the INT3 bit in JINTE0 is 1.

chanhvinh.com

41.4.2 Data Transfer Interrupt Request (JDTI)

The flags in JINTS1 are the interrupt sources for transferring the image data and coded data. The interrupt requests asserted by these interrupt sources can be negated by clearing the corresponding interrupt status bits to 0.

(1) Compression

- Interrupt request generated after the specified number of input image data lines has been read
  When the DINLF bit in JINTS1 is 1, the number of image data lines specified by JIFESLC has been transferred; transfer the rest of the image data to the external buffer and resume transferring the data from the external buffer. A data transfer interrupt request is sent when the DINLEN bit in JINTE1 is 1.
- Interrupt request generated after all processes are completed
  When the CBTF bit in JINTS1 is 1, this module has completed compression and transferred all of the coded data. The data transfer interrupt request is sent when the CBTEN bit in JINTE1 is set to 1.

chanhvinh.com

(2) Decompression

- Interrupt request generated after the specified number of output image data lines has been written to

  When the DOUTLF bit in the JINTS1 is 1, the number of image data lines specified by JIFDDLC has been transferred. Secure a space for the next coded data in the external buffer, and resume transfer process. A data transfer interrupt request is sent when the DOUTLEN bit in JINTE1 is 1.
- Interrupt request generated after the specified amount of input coded data has been read

  The JINF bit in JINTS1 becomes 1 when the amount of coded data specified by JIFDSDC has been transferred. Secure the next coded data in the external buffer, and resume transfer process. A data transfer interrupt is also sent at this time if the JINEN bit in JINTE1 is 1.
- Interrupt request generated after all processes are completed

  The DBTF bit in JINTS1 becomes 1 when this module has completed decompression and transferred all of the coded data. A data transfer interrupt request is also sent at this time if the DBTEN bit in JINTE1 is set to 1.

chanhvinh.com

41.5 Bus Reset Processing

Issuing the bus reset command (setting the BRST bit in JCCMD to 1) causes a bus reset.

When this module is in operation, the bus reset command should not be issued. Registers below are initialized by a bus reset.

- JPEG code data count upper register (JCDTCU)
- JPEG code data count middle register (JCDTCM)
- JPEG code data count lower register (JCDTCD)
- JPEG interrupt status register 0 (JINTS0)
- JPEG code decode error register (JCDERR)
- JPEG code reset register (JCRST)

chanhvinh.com

41.6 Usage Notes

41.6.1 Pixel Format YCbCr

This module treats the range from -128 to 127 as input/output values for YCbCr values in the YCbCr444, YCbCr422, YCbCr411, or YCbCr420 pixel format. On the other hand, video display controller 4 treats the range from 0 to 255 as input/output values for YCbCr. Therefore, when bidirectionally transferring data in YCbCr pixel formats between this module and video display controller 4, correct YCbCr values by adding or subtracting 128.

chanhvinh.com

chanhvinh.com
chanhvinh.com
chanhvinh.com
chanhvinh.com

chanhvinh.com

Section 42 Sampling Rate Converter

The sampling rate converter converts the sampling rate for data produced by decoders such as WMA, MP3, or AAC.

42.1 Features

- Data size: 16 bits (stereo/monaural)
- Sampling rates

  Input: Either 8 kHz, 11.025 kHz, 12 kHz, 16 kHz, 22.05 kHz, 24 kHz, 32 kHz, 44.1 kHz, or 48 kHz is selectable.

  Output: Either 8 kHz*, 16 kHz*, 32 kHz, 44.1 kHz, or 48 kHz is selectable.

Note: * When 44.1 kHz is selected as the input sampling rate.

- Processing capacity: A sample output interval is a maximum of 14 µs. (P0ϕ = 33 MHz)
- SNR: 80 db or higher
- Five interrupt sources: Input data FIFO empty, output data FIFO full, output data FIFO overwrite, output data FIFO underflow, and conversion end
- Two DMA transfer sources: Input data FIFO empty and output data FIFO full
- Module standby mode

  Power consumption can be reduced by stopping clock supply to this module when not used.

chanhvinh.com

Figure 42.1 shows a block diagram.

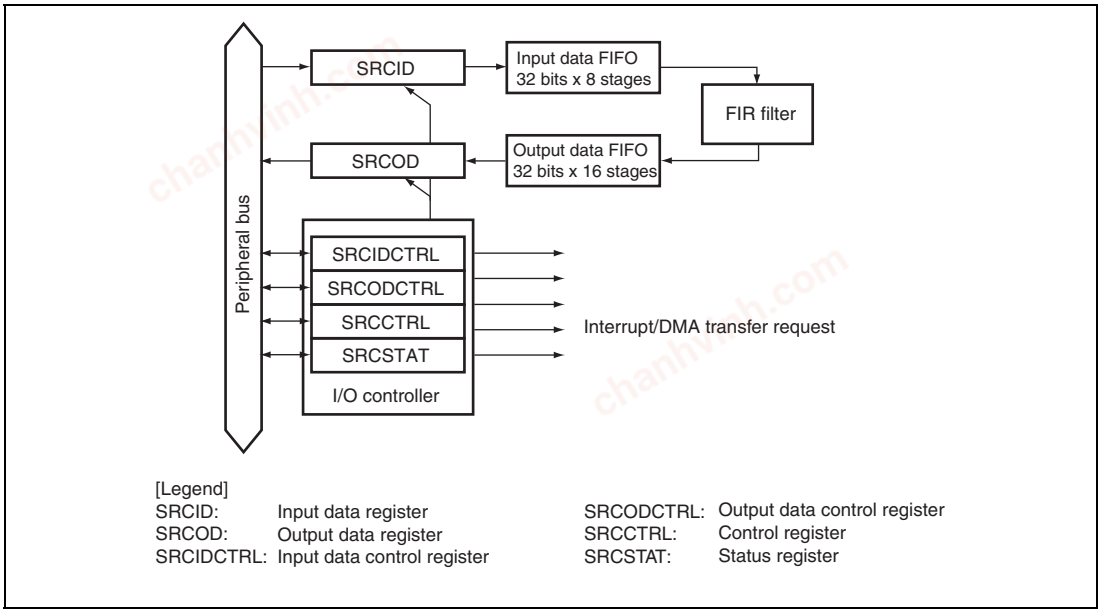

Figure 42.1 Block Diagram

chanhvinh.com

42.2 Register Descriptions

Table 42.1 shows the register configuration.

Table 42.1 Register Configuration

Channel	Register Name	Abbreviation	R/W	Initial Value	Address	Access Size
0	Input data register_0	SRCID_0	R/W	H'00000000	H'FFFE7000	16, 32
	Output data register_0	SRCOD_0	R	H'00000000	H'FFFE7004	16, 32
	Input data control register_0	SRCIDCTRL_0	R/W	H'0000	H'FFFE7008	16
	Output data control register_0	SRCODCTRL_0	R/W	H'0000	H'FFFE700A	16
	Control register_0	SRCCTRL_0	R/W	H'0000	H'FFFE700C	16
	Status register_0	SRCSTAT_0	R/(W)*	H'0002	H'FFFE700E	16
1	Input data register_1	SRCID_1	R/W	H'00000000	H'FFFE7800	16, 32
	Output data register_1	SRCOD_1	R	H'00000000	H'FFFE7804	16, 32
	Input data control register_1	SRCIDCTRL_1	R/W	H'0000	H'FFFE7808	16
	Output data control register_1	SRCODCTRL_1	R/W	H'0000	H'FFFE780A	16
	Control register_1	SRCCTRL_1	R/W	H'0000	H'FFFE780C	16
	Status register_1	SRCSTAT_1	R/(W)*	H'0002	H'FFFE780E	16
2	Input data register_2	SRCID_2	R/W	H'00000000	H'FFFE8000	16, 32
	Output data register_2	SRCOD_2	R	H'00000000	H'FFFE8004	16, 32
	Input data control register_2	SRCIDCTRL_2	R/W	H'0000	H'FFFE8008	16
	Output data control register_2	SRCODCTRL_2	R/W	H'0000	H'FFFE800A	16
	Control register_2	SRCCTRL_2	R/W	H'0000	H'FFFE800C	16
	Status register_2	SRCSTAT_2	R/(W)*	H'0002	H'FFFE800E	16

Note: * Bits 15 to 6 and 4 are read-only. Only 0 can be written to bits 5 and 3 after having read as 1.

chanhvinh.com

42.2.1 Input Data Register (SRCID)

SRCID is a 32-bit readable/writable register that is used to input the data before sampling rate conversion. All the bits are read as 0. The data input to SRCID is stored in the 8-stage input data FIFO. When the number of data units in the input data FIFO is 8, writing to SRCID has no effect.

For stereo data, bits 31 to 16 are for Lch data, and bits 15 to 0 are for Rch data. For monaural data, data in bits 31 to 16 is valid, and data in bits 15 to 0 is invalid.

Bit:	31	30	29	28	27	26	25	24	23	22	21	20	19	18	17	16
Initial value:	0	0	0	0	0	0	0	0	0	0	0	0	0	0	0	0
R/W:	R/W	R/W	R/W	R/W	R/W	R/W	R/W	R/W	R/W	R/W	R/W	R/W	R/W	R/W	R/W	R/W

Bit:	15	14	13	12	11	10	9	8	7	6	5	4	3	2	1	0
Initial value:	0	0	0	0	0	0	0	0	0	0	0	0	0	0	0	0
R/W:	R/W	R/W	R/W	R/W	R/W	R/W	R/W	R/W	R/W	R/W	R/W	R/W	R/W	R/W	R/W	R/W

The data subject to sampling rate conversion is aligned differently depending on the IED bit setting in SRCIDCTRL. Table 42.2 shows the relationship between the IED bit setting and data alignment.

Table 42.2 Alignment of Data before Sampling Rate Conversion

IED	Lch[15:8]	Lch[7:0]	Rch[15:8]	Lch[7:0]
0	SRCID[31:24]	SRCID[23:16]	SRCID[15:8]	SRCID[7:0]
1	SRCID[23:16]	SRCID[31:24]	SRCID[7:0]	SRCID[15:8]

chanhvinh.com

42.2.2 Output Data Register (SRCOD)

SRCOD is a 32-bit read-only register used to output the data after sampling rate conversion. The data in the 16-stage output data FIFO is read through SRCOD. When the number of data in the output data FIFO is zero after the start of conversion, the value previously read is read again.

Bit:	31	30	29	28	27	26	25	24	23	22	21	20	19	18	17	16
Initial value:	0	0	0	0	0	0	0	0	0	0	0	0	0	0	0	0
R/W:	R	R	R	R	R	R	R	R	R	R	R	R	R	R	R	R

Bit:	15	14	13	12	11	10	9	8	7	6	5	4	3	2	1	0
Initial value:	0	0	0	0	0	0	0	0	0	0	0	0	0	0	0	0
R/W:	R	R	R	R	R	R	R	R	R	R	R	R	R	R	R	R

The data in SRCOD is aligned differently depending on the OCH and OED bit setting in SRCODCTRL. Table 42.3 shows the correspondence between the OCH and OED bit setting and data alignment in SRCOD.

Table 42.3 Alignment of Data in SRCOD

OCH	OED	SRCOD[31:24]	SRCOD[23:16]	SRCOD[15:8]	SRCOD[7:0]
0	0	Lch[15:8]	Lch[7:0]	Rch[15:8]*2	Rch[7:0]*2
	1	Lch[7:0]	Lch[15:8]	Rch[7:0]*2	Rch[15:8]*2
1*1	0	Rch[15:8]	Rch[7:0]	Lch[15:8]	Lch[7:0]
	1	Rch[7:0]	Rch[15:8]	Lch[7:0]	Lch[15:8]

Notes: 1. When processing monaural data, do not set the bit to 1.
2. When processing monaural data, the data in these bits is invalid.

chanhvinh.com

42.2.3 Input Data Control Register (SRCIDCTRL)

SRCIDCTRL is a 16-bit readable/writable register that specifies the endian format of input data, enables/disables the interrupt requests, and specifies the triggering number of data units.

Bit:	15	14	13	12	11	10	9	8	7	6	5	4	3	2	1	0
	—	—	—	—	—	—	IED	IEN	—	—	—	—	—	—	IFTRG[1:0]	
Initial value:	0	0	0	0	0	0	0	0	0	0	0	0	0	0	0	0
R/W:	R	R	R	R	R	R	R/W	R/W	R	R	R	R	R	R	R/W	R/W

Bit	Bit Name	Initial Value	R/W	Description
15 to 10	—	All 0	R	Reserved These bits are always read as 0. The write value should always be 0.
9	IED	0	R/W	Input Data Endian Specifies the endian format of the input data. 0: Big endian 1: Little endian
8	IEN	0	R/W	Input Data FIFO Empty Interrupt Enable Enables/disables the input data FIFO empty interrupt request to be issued when the number of data units in the input FIFO becomes equal to or smaller than the triggering number specified by the IFTRG1 and IFTRG0 bits, thus resulting in the IINT bit in the status register (SRCSTAT) being set to 1. 0: Input data FIFO empty interrupt is disabled. 1: Input data FIFO empty interrupt is enabled.
7 to 2	—	All 0	R	Reserved These bits are always read as 0. The write value should always be 0.

chanhvinh.com

Bit	Bit Name	Initial Value	R/W	Description
1, 0	IFTRG[1:0]	00	R/W	Input FIFO Data Triggering Number Specifies the condition in terms of the number on which the IINT bit in the status register (SRCSTAT) is set to 1. When the number of data units in the input FIFO becomes equal to or smaller than the triggering number listed below, the IINT bit is set to 1. 00: 0 01: 2 10: 4 11: 6

chanhvinh.com

42.2.4 Output Data Control Register (SRCODCTRL)

SRCODCTRL is a 16-bit readable/writable register that specifies whether to exchange the channels for the output data, specifies the endian format of output data, enables/disables the interrupt requests, and specifies the triggering number of data units.

Bit:	15	14	13	12	11	10	9	8	7	6	5	4	3	2	1	0
	—	—	—	—	—	OCH	OED	OEN	—	—	—	—	—	—	OFTRG[1:0]	
Initial value:	0	0	0	0	0	0	0	0	0	0	0	0	0	0	0	0
R/W:	R	R	R	R	R	R/W	R/W	R/W	R	R	R	R	R	R	R/W	R/W

Bit	Bit Name	Initial Value	R/W	Description
15 to 11	—	All 0	R	Reserved These bits are always read as 0. The write value should always be 0.
10	OCH	0	R/W	Output Data Channel Exchange Specifies whether to exchange the channels for the output data register (SRCOD). When processing monaural data, do not set this bit to 1. 0: Does not exchange the channels (the same order as data input) 1: Exchanges the channels (the opposite order from data input)
9	OED	0	R/W	Output Data Endian Specifies the endian format of the output data. 0: Big endian 1: Little endian
8	OEN	0	R/W	Output Data FIFO Full Interrupt Enable Enables/disables the output data FIFO full interrupt request to be issued when the number of data units in the output FIFO becomes equal to or greater than the number specified by the OFTRG1 and OFTRG0 bits, thus resulting in the OINT bit in the status register (SRCSTAT) being set to 1. 0: Output data FIFO full interrupt is disabled. 1: Output data FIFO full interrupt is enabled.

chanhvinh.com

Bit	Bit Name	Initial Value	R/W	Description
7 to 2	—	All 0	R	Reserved These bits are always read as 0. The write value should always be 0.
1, 0	OFTRG[1:0]	00	R/W	Output FIFO Data Trigger Number Specifies the condition in terms of the number on which the OINT bit in the status register (SRCSTAT) is set to 1. When the number of data units in the output FIFO becomes equal to or greater than the number listed below, the OINT bit is set to 1. 00: 1 01: 4 10: 8 11: 12

chanhvinh.com

42.2.5 Control Register (SRCCTRL)

SRCCTRL is a 16-bit readable/writable register that enables/disables the module operation, enables/disables the interrupt requests, and specifies flush processing, clear processing of the internal work memory, and the input and output sampling rates.

Bit:	15	14	13	12	11	10	9	8	7	6	5	4	3	2	1	0
	—	—	CEEN	SRCEN	UDEN	OVEN	FL	CL	IFS[3:0]				—	OFS[2:0]		
Initial value:	0	0	0	0	0	0	0	0	0	0	0	0	0	0	0	0
R/W:	R	R	R/W	R/W	R/W	R/W	R/W	R/W	R/W	R/W	R/W	R/W	R	R/W	R/W	R/W

Bit	Bit Name	Initial Value	R/W	Description
15, 14	—	All 0	R	Reserved These bits are always read as 0. The write value should always be 0.
13	CEEN	0	R/W	Conversion End Interrupt Enable Enables/disables the conversion end interrupt to be generated when the CEF bit in SRCSTAT is set to 1 after flush processing is completed and all the output data is read. 0: Disables conversion end interrupt requests. 1: Enables conversion end interrupt requests.
12	SRCEN	0	R/W	Module Enable Enables/disables this module operation. Writing 1 while SRCEN = 0 clears the internal work memory. 0: Disables this module operation. 1: Enables this module operation. Note: When SRCEN = 1, do not change the settings of the following bits.

Register	Bit	Bit Name
SRCIDCTRL	9	IED
SRCODCTRL	10, 9	OCH, OED
SRCCTRL	7 to 4, 2 to 0	IFS[3:0], OFS[2:0]

chanhvinh.com

Bit	Bit Name	Initial Value	R/W	Description
11	UDEN	0	R/W	Output Data FIFO Underflow Interrupt Enable Enables/disables the output data FIFO underflow interrupt to be generated when output data FIFO is read and the UDF bit in SRCSTAT is set to 1 while the number of data units in the output data FIFO is zero. 0: Disables output data FIFO underflow interrupt requests. 1: Enables output data FIFO underflow interrupt requests.
10	OVEN	0	R/W	Output Data FIFO Overwrite Interrupt Enable Enables/disables the output data FIFO overwrite interrupt request to be issued when the conversion for the next data has been completed while the number of data units in the output FIFO is eight, thus setting the OVF bit in the status register (SRCSTAT) to 1. When OVEN = 1: Conversion processing is stopped until the OVF bit is cleared by the CPU accessing to SRCSTAT when the output data FIFO overwrite interrupt is generated. At this time, conversion result writing to the output data FIFO is also stopped. OVEN = 0: The OVF bit is automatically cleared when the output data FIFO has space, and conversion processing can be continued. 0: Output data FIFO overwrite interrupt is disabled. 1: Output data FIFO overwrite interrupt is enabled.
9	FL	0	R/W	Internal Work Memory Flush Writing 1 to this bit starts converting the sampling rate of all the data in the input FIFO, input buffer memory, and intermediate memory (i.e., flush processing). This bit is always read as 0. When SRCEN = 0, writing 1 to this bit does not trigger flush processing. In addition, when 1 is written to the FL bit while the number of data units in the input buffer memory is less than the values shown in table 42.6, valid output data cannot be received. Thus the internal work memory is cleared without triggering the flush processing.

chanhvinh.com

Bit	Bit Name	Initial Value	R/W	Description
8	CL	0	R/W	Internal Work Memory Clear Writing 1 to this bit clears the input FIFO, output FIFO, input buffer memory, intermediate memory, and accumulator. This bit is always read as 0. Even when SRCEN = 0, writing 1 to this bit clears the processing.
7 to 4	IFS[3:0]	All 0	R/W	Input Sampling Rate Specifies the input sampling rate. 0000: 8.0 kHz 0001: 11.025 kHz 0010: 12.0 kHz 0011: Setting prohibited 0100: 16.0 kHz 0101: 22.05 kHz 0110: 24.0 kHz 0111: Setting prohibited 1000: 32.0 kHz 1001: 44.1 kHz 1010: 48.0 kHz 1011: Setting prohibited 1100: Setting prohibited 1101: Setting prohibited 1110: Setting prohibited 1111: Setting prohibited
3	—	0	R	Reserved This bit is always read as 0. The write value should always be 0.

chanhvinh.com

Bit	Bit Name	Initial Value	R/W	Description
2 to 0	OFS[2:0]	All 0	R/W	Output Sampling Rate These bits specify the output sampling rate. 000: 44.1 kHz 001: 48.0 kHz 010: 32.0 kHz 011: Setting prohibited 100: 8.0 kHz* 101: 16.0 kHz* 110: Setting prohibited 111: Setting prohibited Note: * Setting the OFS[2:0] bits to 100 or 101 is valid only when the IFS[3:0] bits are 1001.

chanhvinh.com

After flush processing has been completed, the number of output data units obtained as a result of conversion can be calculated by using the following formula.

$$\text{Number of output data units} = \left\lfloor (\text{Number of input data units} \times n - 1) \times \frac{\text{Output sampling rate}}{\text{Input sampling rate} \times n} \right\rfloor + 1$$

Table 42.4 Value of n in the Formula

OFS Setting (Output Sampling Rate [kHz])	IFS Setting (Input Sampling Rate [kHz])								
	0000 (8.0)	0001 (11.025)	0010 (12.0)	0100 (16.0)	0101 (22.05)	0110 (24.0)	1000 (32.0)	1001 (44.1)	1010 (48.0)
000 (44.1)	6	4	4	3	2	2	3	—	1
001 (48.0)	6	4	4	3	2	2	3	1	—
010 (32.0)	4	8	4	2	4	2	—	2	1
100 (8.0)	—	—	—	—	—	—	—	1	—
101 (16.0)	—	—	—	—	—	—	—	1	—

Conversion processing is not started and thus output data is not obtained until the specified number of data units are input. The minimum number of input data units necessary for obtaining the first output data depends on the IFS and OFS bit settings. Tables 42.5 and 42.6 show the relation between the settings of the IFS and OFS bits and the number of input data required.

Table 42.5 Relation between Sampling Rate Settings and Number of Initial Input Data Units Required

OFS Setting (Output Sampling Rate [kHz])	IFS Setting (Input Sampling Rate [kHz])								
	0000 (8.0)	0001 (11.025)	0010 (12.0)	0100 (16.0)	0101 (22.05)	0110 (24.0)	1000 (32.0)	1001 (44.1)	1010 (48.0)
000 (44.1)	38	40	40	43	48	48	43	—	63
001 (48.0)	38	40	40	43	48	48	43	32	—
010 (32.0)	40	37	40	48	40	48	—	48	63
100 (8.0)	—	—	—	—	—	—	—	63	—
101 (16.0)	—	—	—	—	—	—	—	63	—

chanhvinh.com

Table 42.6 Relation between Sampling Rate Settings and Number of Input Data Units Required for Flush Processing

OFS Setting (Output Sampling Rate [kHz])	IFS Setting (Input Sampling Rate [kHz])								
	0000 (8.0)	0001 (11.025)	0010 (12.0)	0100 (16.0)	0101 (22.05)	0110 (24.0)	1000 (32.0)	1001 (44.1)	1010 (48.0)
000 (44.1)	27	24	24	22	16	16	22	—	1
001 (48.0)	27	24	24	22	16	16	22	32	—
010 (32.0)	24	29	24	16	24	16	—	16	1
100 (8.0)	—	—	—	—	—	—	—	1	—
101 (16.0)	—	—	—	—	—	—	—	1	—

chanhvinh.com

42.2.6 Status Register (SRCSTAT)

SRCSTAT is a 16-bit readable/writable register that indicates the number of data units in the input and output data FIFOs, whether the various interrupt sources have been generated or not, and the flush processing status.

Bit:	15	14	13	12	11	10	9	8	7	6	5	4	3	2	1	0
	OFDN[4:0]					IFDN[3:0]				—	CEF	FLF	UDF	OVF	IINT	OINT
Initial value:	0	0	0	0	0	0	0	0	0	0	0	0	0	0	1	0
R/W:	R	R	R	R	R	R	R	R	R	R	R(W)*1	R	R(W)*1	R/(W)*1	R/(W)*1	R/(W)*1

Note: *1 Only 0 can be written after having read as 1.

Bit	Bit Name	Initial Value	R/W	Description
15 to 11	OFDN[4:0]	All 0	R	Output FIFO Data Count Indicates the number of data units in the output FIFO.
10 to 7	IFDN[3:0]	All 0	R	Input FIFO Data Count Indicates the number of data units in the input FIFO.
6	—	0	R	Reserved This bit is always read as 0. The write value should always be 0.
5	CEF	0	R/(W)*	Conversion End Flag Indicates that all the output data is read after flush processing is completed. [Clearing conditions] • When 0 has been written to the CEF bit after reading CEF = 1. • When 1 has been written to the CL bit in SRCCTRL. • When 1 has been written to the SRCEN bit in SRCCTRL while SRCEN is 0. [Setting condition] • When the number of data units in the output data FIFO is zero on completion of flush processing.

chanhvinh.com

Bit	Bit Name	Initial Value	R/W	Description
4	FLF	0	R	Flush Processing Status Flag Indicates whether flush processing is in progress or not. [Clearing conditions] • When flush processing has been completed. • When 1 has been written to the CL bit in SRCCTRL. • When 1 has been written to the SRCEN bit in SRCCTRL while SRCEN is 0. [Setting condition] • When 1 has been written to the FL bit in SRCCTRL.
3	UDF	0	R/(W)*	Output FIFO Underflow Interrupt Request Flag Indicates that the output data FIFO is read when the number of data units in the output data FIFO is zero. [Clearing conditions] • When 0 has been written to the UDF bit after reading UVF = 1. • When 1 has been written to the CL bit in SRCCTRL. • When 1 has been written to the SRCEN bit in SRCCTRL while SRCEN is 0. [Setting condition] • When the output data FIFO is read while the number of data units in the output FIFO is zero.

chanhvinh.com

Bit	Bit Name	Initial Value	R/W	Description
2	OVF	0	R/(W)*	Output Data FIFO Overwrite Interrupt Request Flag Indicates that the sampling rate conversion for the next data has been completed when the output data FIFO is full. The conversion is stopped until the OVF flag is cleared. [Clearing conditions] • When 0 has been written to the OVF bit after reading OVF = 1 while the OVEN bit in SRCCTRL is 1. • When the number of data units in the output FIFO decreases after reading SRCOD while the OVEN bit in SRCCTRL is 0. • When 1 has been written to the CL bit in SRCCTRL. • When 1 has been written to the SRCEN bit in SRCCTRL while SRCEN is 0. [Setting condition] • When the sampling rate conversion for the next data has been completed when the output FIFO is full.

chanhvinh.com

Bit	Bit Name	Initial Value	R/W	Description
1	IINT	1	R/(W)*	Input Data FIFO Empty Interrupt Request Flag Indicates that the number of data units in the input FIFO has become equal to or smaller than the triggering number specified by the IFTRG1 and IFTRG0 bits in the input data control register (SRCIDCTRL). [Clearing conditions] • When 0 has been written to the IINT bit after reading IINT = 1. • When the number of data units in the input FIFO has exceeded the specified triggering number due to DMA transfer to the input FIFO. [Setting conditions] • When the number of data units in the input FIFO has become equal to or smaller than the specified triggering number. • When 1 has been written to the CL bit in SRCCTRL. • When 1 has been written to the SRCEN bit in SRCCTRL while SRCEN is 0.

chanhvinh.com

Bit	Bit Name	Initial Value	R/W	Description
0	OINT	0	R/(W)*	Output Data FIFO Full Interrupt Request Flag Indicates that the number of data units in the output FIFO has become equal to or greater than the triggering number specified by the OFTRG[1:0] bits in the output data control register (SRCODCTRL). [Clearing conditions] • When 0 has been written to the OINT bit after reading OINT = 1. • When the number of data units in the FIFO has become less than the specified triggering number due to DMA transfer to the output FIFO. • When 1 has been written to the CL bit in SRCCTRL. • When 1 has been written to the SRCEN bit in SRCCTRL while SRCEN is 0. [Setting condition] • When the number of data units in the output FIFO has become equal to or greater than the specified triggering number.

Note: * Only 0 can be written after having read as 1.

chanhvinh.com

42.3 Operation

42.3.1 Initial Setting

Figure 42.2 shows a sample flowchart for initial setting.

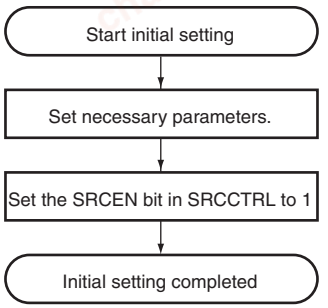

Register	Bit	Items to be Set
SRCCTRL	CEEN	Enabling/disabling of the CEF interrupt
	UDEN	Enabling/disabling of the UDF interrupt
	OVEN	Enabling/disabling of the OVF interrupt
	IFS[3:0]	Input sampling rate
	OFS[2:0]	Output sampling rate
SRCIDCTRL	IED	Input data endian
	IEN	Enabling/disabling of the IDE interrupt
	IFTRG[1:0]	Input data FIFO triggering number
SRCODCTRL	OCH	Exchanging of output data channels
	OED	Output data endian
	OEN	Enabling/disabling of the ODF interrupt
	OFTRG[1:0]	Output data FIFO triggering number

Figure 42.2 Sample Flowchart for Initial Setting

chanhvinh.com

42.3.2 Data Input

Figure 42.3 is a sample flowchart for data input.

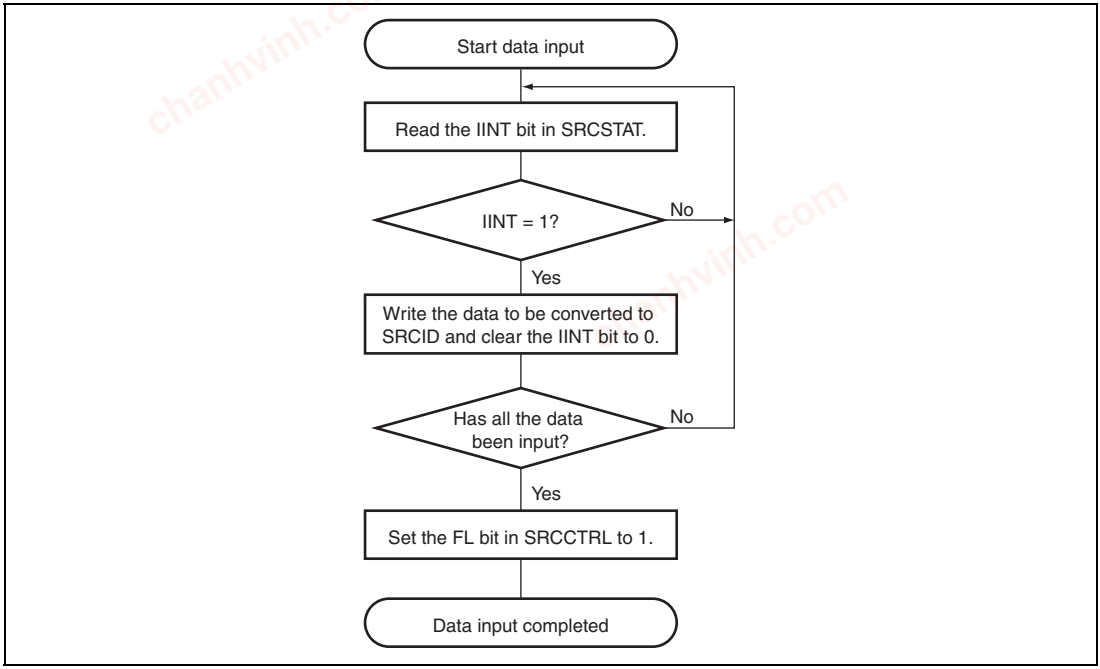

Figure 42.3 Sample Flowchart for Data Input

(1) When Interrupts are Issued to CPU

1. Set the IEN bit in SRCIDCTRL to 1.
2. When the IINT bit in SRCSTAT is set to 1, the IDE interrupt request is issued. In the interrupt processing routine, read the IINT bit and confirm that it is 1, write data to SRCID, and write 0 to the IINT bit. Then return from the interrupt processing routine.
3. Repeat step 2 until all the data has been input, and write 1 to the FL bit in SRCCTRL.

chanhvinh.com

(2) When Interrupts are Used to Activate Direct Memory Access Controller

1. Assign IDEI of this module to one channel of the direct memory access controller.
2. Set the IEN bit in SRCIDCTRL to 1.
3. When the IINT bit in SRCSTAT is set to 1, the IDE interrupt request is issued thus activating the direct memory access controller. When the direct memory access controller has written data to the SRCID thus resulting in the number of data units in the input data FIFO exceeding that of the triggering number specified by the IFTRG1 and IFTRG 0 bits in SRCIDCTRL, the IINT bit is cleared to 0.
4. Repeat step 3 until all the data has been input, and write 1 to the FL bit in SRCCTRL.

(3) When Serial Sound Interface Interrupts are Used for Activating Direct Memory Access Controller to Transfer Input Data from Serial Sound Interface

1. Assign the serial sound interface to one channel of the direct memory access controller as a DMA transfer request source. Set SSIFRDR of the serial sound interface as a transfer source and SRCID of the sampling rate converter as a transfer destination, and set the serial source interface to enable reception operation.
2. When the RDF bit in SSIFSR is set to 1, the serial sound interface interrupt request is issued thus activating the direct memory access controller. The direct memory access controller then reads data from SSIFRDR and writes the data to SRCID.
3. Repeat step 2 until all the data has been input, and write 1 to the FL bit in SRCCTRL.

chanhvinh.com

42.3.3 Data Output

Figure 42.4 is a sample flowchart for data output.

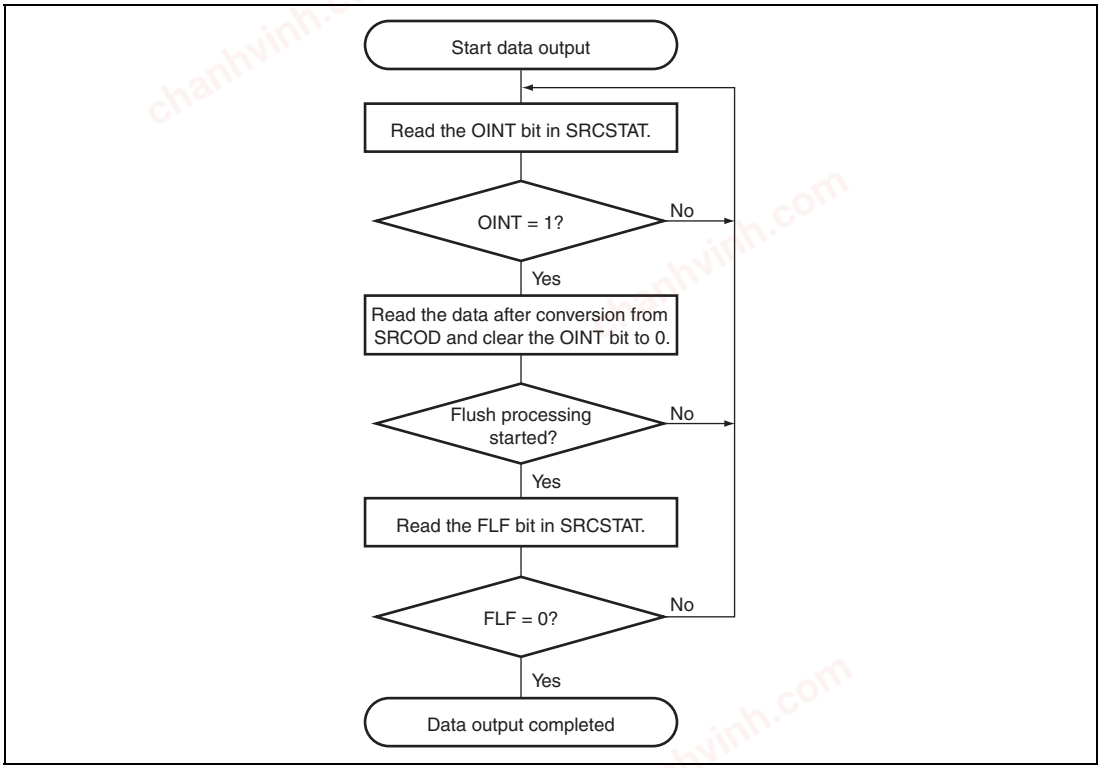

Figure 42.4 Sample Flowchart for Data Output

chanhvinh.com

(1) When Interrupts are Issued to CPU

1. Set the OEN bit in SRCODCTRL to 1.
2. When the OINT bit in SRCSTAT is set to 1, the ODF interrupt request is issued. In the interrupt processing routine, read the OINT bit and confirm that it is 1, read data from SRCOD, and write 0 to the OINT bit. Then return from the interrupt processing routine.
3. After flush processing starts, repeat step 2 until the CEF bit in SRCSTAT is read as 1.

(2) When Interrupts are Used to Activate Direct Memory Access Controller

1. Assign ODFI of this module to one channel of the direct memory access controller.
2. Set the OEN bit in SRCODCTRL to 1.
3. When the OINT bit in SRCSTAT is set to 1, the ODF interrupt request is issued thus activating the direct memory access controller. When the direct memory access controller has read data from SRCOD thus resulting in the number of data units in the output data FIFO being less than the triggering number specified by the OFTRG1 and OFTRG0 bits in SRCODCTRL, the OINT bit is cleared to 0.
4. After flush processing starts, repeat step 3 until the FLF bit in SRCSTAT is read as 0.

(3) When Serial Sound Interface Interrupts are Used for Activating Direct Memory Access Controller to Transfer Output Data to Serial Sound Interface

1. Set the OVEN bit in SRCCTRL to 0 to disable the OVF interrupt request generation.
2. Assign the serial sound interface to one channel of the direct memory access controller as a DMA transfer request source. Set SRCID of the sampling rate converter as a transfer source and SSIFTDR of the serial sound interface as a transfer destination, and set the serial source interface to enable transmission operation.
3. When the TDE bit in SSIFSR is set to 1, the serial sound interface issues an interrupt request thus activating the direct memory access controller. The direct memory access controller then reads data from SRCOD and writes the data to SSIFTDR.
4. After flush processing starts, repeat step 3 until the CEF bit in SRCSTAT is read as 1.

chanhvinh.com

42.4 Interrupts

This module has five interrupt sources: input data FIFO empty (IDEI), output data FIFO full (ODFI), output data FIFO overwrite (OVF), output data FIFO underflow (UDF), and conversion end (CEF). Table 42.7 summarizes the interrupts.

Table 42.7 Interrupt Requests and Generation Conditions

Interrupt Request	Abbreviation	Interrupt Condition	Direct Memory Access Controller Activation
Input data FIFO empty	IDEI	IINT = 1, IEN = 1, and SRCEN = 1	Possible
Output data FIFO full	ODFI	OINT = 1, OEN = 1, and SRCEN = 1	Possible
Output data FIFO overwrite	OVF	OVF = 1, OVEN = 1, and SRCEN = 1	Not possible
Output data FIFO underflow	UDF	UDF = 1, UDEN = 1, and SRCEN = 1	Not possible
Conversion end	CEF	CEF = 1, CEEN = 1, and SRCEN = 1	Not possible

When the interrupt condition is satisfied, the CPU executes the interrupt exception handling routine. The interrupt source flags should be cleared in the routine.

The IDEI and ODFI interrupts can activate the direct memory access controller when the direct memory access controller is set to allow this. If the direct memory access controller is activated, the interrupts from this module are not sent to the CPU. When the direct memory access controller has written data to SRCID resulting in the number of data units in the input data FIFO exceeding that of the specified triggering number, the IINT bit is cleared to 0. Similarly, when the direct memory access controller has read data from SRCOD resulting in the number of data units in the output data FIFO being less than the specified triggering number, the OINT bit is cleared to 0.

chanhvinh.com

42.5 Usage Notes

42.5.1 Notes on Accessing Registers

After the following write access to SRCCTRL, three cycles of the peripheral clock 0 (P0ϕ) elapse before the corresponding bit in SRCSTAT is updated.

- Before the FLF bit in SRCSTAT is set after 1 is written to the FL bit in SRCCTRL
- Before each bit in SRCSTAT is initialized after 1 is written to the CL bit in SRCCTRL
- Before each bit in SRCSTAT is initialized after 1 is written to the SRCEN bit in SRCCTRL while the SRCEN bit is 0

On the other hand, as the CPU executes any subsequent instruction without waiting for the completion of the register writing, an instruction that immediately follows that used to write to SRCCTRL cannot accurately detect the updated state of SRCSTAT. To check the updated SRCSTAT state, dummy-read SRCCTRL or SRCSTAT after the instruction used to write to SRCCTRL.

42.5.2 Notes on Flush Processing

When 1 is written to the FL bit in SRCCTRL, this module continues conversion processing by adding 0-data to the input data end point. Flush processing, therefore, should be performed when the audio data end point is input and there is no subsequent data.

To perform conversion again after flush processing, clear the internal work memory in either of the following ways.

- Write 1 to the CL bit in SRCCTRL.
- Write 0 and then 1 to the SRCEN bit in SRCCTRL.

chanhvinh.com

chanhvinh.com
chanhvinh.com
chanhvinh.com
chanhvinh.com

chanhvinh.com

Section 43 Sound Generator

This LSI has an on-chip sound generator with four channels.

43.1 Features

- Capable of adjusting sound volume using 8-bit PWM output
- Selection of operating clocks
  Four types of operating clocks (P0ϕ/2, P0ϕ/4, P0ϕ/8, and P0ϕ/16) can be selected.
- Frequency settings in the 31-Hz to 20-kHz range with precision of 1% or less
- Output stop procedures can be selected
- Automatic attenuator function can be selected
- Interrupt source: one type
  Attenuation end interrupt can be requested
- Module stop mode can be set

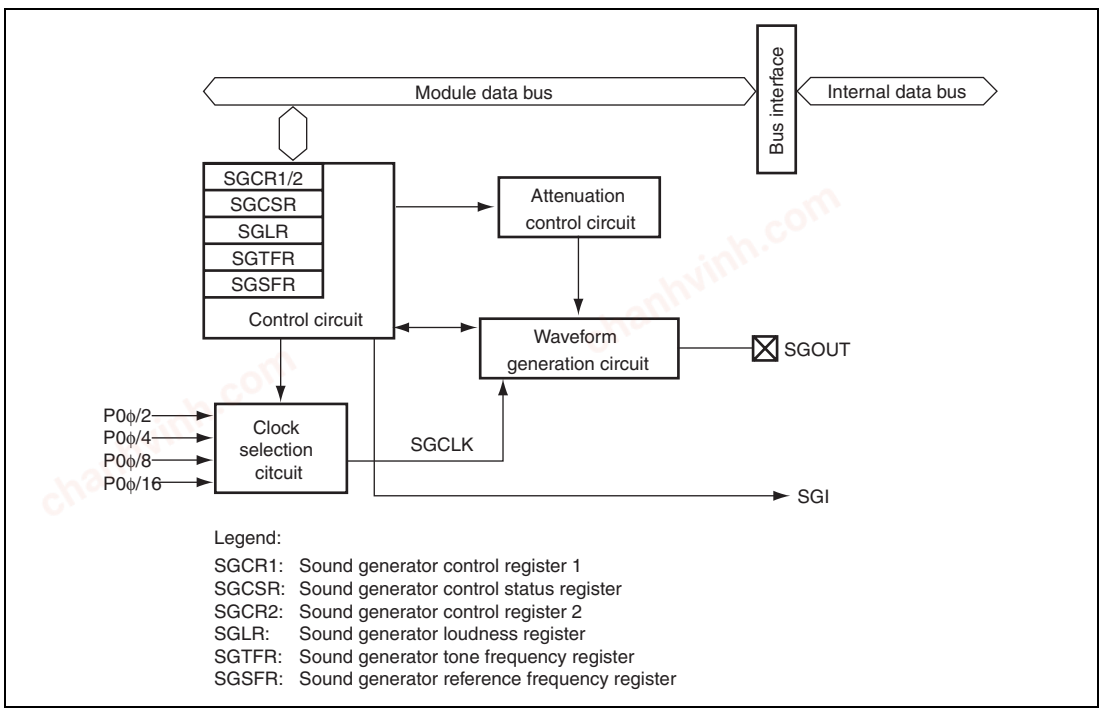

Figure 43.1 Block Diagram

chanhvinh.com

43.2 Input/Output Pins

Table 43.1 shows the pin configuration.

Table 43.1 Pin Configuration

Name	Abbr.	I/O	Function
Sound generator output pin 0	SGOUT_0	Output	Channel 0 sound generator output
Sound generator output pin 1	SGOUT_1	Output	Channel 1 sound generator output
Sound generator output pin 2	SGOUT_2	Output	Channel 2 sound generator output
Sound generator output pin 3	SGOUT_3	Output	Channel 3 sound generator output

43.3 Register Descriptions

Table 43.2 shows the register configuration. Separate explanations for each channel are not given in this section.

chanhvinh.com

Table 43.2 Register Configuration

Channel	Register Name	Abbreviation	R/W	Initial Value	Address	Access Size
0	Sound generator control register 1_0	SGCR1_0	R/W	H'00	H'FFFEC800	8,16
	Sound generator control status register_0	SGCSR_0	R/W	H'00	H'FFFEC801	8,16
	Sound generator control register 2_0	SGCR2_0	R/W	H'00	H'FFFEC802	8,16
	Sound generator loudness register_0	SGLR_0	R/W	H'00	H'FFFEC803	8,16
	Sound generator tone frequency register_0	SGTFR_0	R/W	H'00	H'FFFEC804	8,16
	Sound generator reference frequency register_0	SGSFR_0	R/W	H'00	H'FFFEC805	8,16
1	Sound generator control register 1_1	SGCR1_1	R/W	H'00	H'FFFECA00	8,16
	Sound generator control status register_1	SGCSR_1	R/W	H'00	H'FFFECA01	8,16
	Sound generator control register 2_1	SGCR2_1	R/W	H'00	H'FFFECA02	8,16
	Sound generator loudness register_1	SGLR_1	R/W	H'00	H'FFFECA03	8,16
	Sound generator tone frequency register_1	SGTFR_1	R/W	H'00	H'FFFECA04	8,16
	Sound generator reference frequency register_1	SGSFR_1	R/W	H'00	H'FFFECA05	8,16
2	Sound generator control register 1_2	SGCR1_2	R/W	H'00	H'FFFECC00	8,16
	Sound generator control status register_2	SGCSR_2	R/W	H'00	H'FFFECC01	8,16
	Sound generator control register 2_2	SGCR2_2	R/W	H'00	H'FFFECC02	8,16
	Sound generator loudness register_2	SGLR_2	R/W	H'00	H'FFFECC03	8,16
	Sound generator tone frequency register_2	SGTFR_2	R/W	H'00	H'FFFECC04	8,16

chanhvinh.com

Channel	Register Name	Abbreviation	R/W	Initial Value	Address	Access Size
2	Sound generator reference frequency register_2	SGSFR_2	R/W	H'00	H'FFFECC05	8,16
3	Sound generator control register 1_3	SGCR1_3	R/W	H'00	H'FFFECE00	8,16
	Sound generator control status register_3	SGCSR_3	R/W	H'00	H'FFFECE01	8,16
	Sound generator control register 2_3	SGCR2_3	R/W	H'00	H'FFFECE02	8,16
	Sound generator loudness register_3	SGLR_3	R/W	H'00	H'FFFECE03	8,16
	Sound generator tone frequency register_3	SGTFR_3	R/W	H'00	H'FFFECE04	8,16
	Sound generator reference frequency register_3	SGSFR_3	R/W	H'00	H'FFFECE05	8,16

chanhvinh.com

43.3.1 Sound Generator Control Register 1 (SGCR1)

SGCR1 controls the operation of this module.

Bit:	7	6	5	4	3	2	1	0
Bit name:	SGST	STPM	—	SGCK[1]	SGCK[0]	DPF[2]	DPF[1]	DPF[0]
Initial value:	0	0	0	0	0	0	0	0
R/W:	R/W	R/W	R	R/W	R/W	R/W	R/W	R/W

Bit	Bit Name	Initial Value	R/W	Description
7	SGST	0	R/W	Operation Start Starts/stops the operation. 0: Stops the operation 1: Starts the operation. The stop procedures differ depending on the STPM bit setting even when SGST = 1
6	STPM	0	R/W	Stop Procedure Select Selects the operation stop procedure. 0: Stops when SGST = 0 1: When the attenuator function is on, operation stops if SGST = 0 and SGDEF = 1 When the attenuator function is off, operation stops if SGST = 0 and SGEND = 1
5	—	0	R	Reserved This bit is always read as 0. The write value should always be 0.
4, 3	SGCK[1:0]	H'0	R/W	Clock Select Selects the operating clock (SGCLK). 00: P0ϕ/2 01: P0ϕ/4 10: P0ϕ/8 11: P0ϕ/16

chanhvinh.com

Bit	Bit Name	Initial Value	R/W	Description
2 to 0	DPF[2:0]	H'0	R/W	Attenuator Function Select These bits turn the attenuator function on and off, and select the attenuation cycle. 000: Attenuator function is off. 001: Attenuates at the TONE frequency 010: Attenuates at the TONE frequency/2 011: Attenuates at the TONE frequency/4 100: Attenuates at the TONE frequency/8 101: Attenuates at the TONE frequency/16 110: Attenuates at the TONE frequency/32 111: Setting prohibited

chanhvinh.com

43.3.2 Sound Generator Control Status Register (SGCSR)

SGCSR is a status register.

Bit:	7	6	5	4	3	2	1	0
Bit name:	SGIE	SGDEF	—	—	—	—	—	—
Initial value:	0	0	0	0	0	0	0	0
R/W:	R/W	R/(W)*	R	R	R	R	R	R

Bit	Bit Name	Initial Value	R/W	Description
7	SGIE	0	R/W	Interrupt Enable Enables/disables the attenuation end interrupt requests. 0: Disables interrupt requests 1: Enables interrupt requests
6	SGDEF	0	R/(W)*	Attenuation End Flag [Setting condition] • When attenuation operation ends [Clearing conditions] • When 0 is written after SGDEF = 1 is read • When SGLR is written
5 to 0	—	All 0	R	Reserved These bits are always read as 0. The write value should always be 0.

Note: * Only 0 can be written to clear the flag.

chanhvinh.com

43.3.3 Sound Generator Control Register 2 (SGCR2)

SGCR2 is used for the termination of this module.

Bit:	7	6	5	4	3	2	1	0
Bit name:	SGEND	TCHG	—	—	—	—	—	—
Initial value:	0	0	0	0	0	0	0	0
R/W:	R/W	R/W	R	R	R	R	R	R

Bit	Bit Name	Initial Value	R/W	Description
7	SGEND	0	R/W	Stop Controls the operation of this module when the attenuator function is off and STPM = 1. 0: Continues operation 1: Stops operation When STPM = 0, the SGST bit controls operation regardless of this bit setting.
6	TCHG	0	R/W	TONE Change Protect Enables/disables writing to the TONE or SFS bit. Bits TONE and SFS can be modified when TCHG = 1. 0: Disables writing to the TONE and SFS bit 1: Enables writing to the TONE and SFS bit
5 to 0	—	All 0	R	Reserved These bits are always read as 0. The write value should always be 0.

chanhvinh.com

43.3.4 Sound Generator Loudness Register (SGLR)

SGLR sets the SGOUT duty.

Bit:	7	6	5	4	3	2	1	0
Bit name:	LD[7]	LD[6]	LD[5]	LD[4]	LD[3]	LD[2]	LD[1]	LD[0]
Initial value:	0	0	0	0	0	0	0	0
R/W:	R/W	R/W	R/W	R/W	R/W	R/W	R/W	R/W

Bit	Bit Name	Initial Value	R/W	Description
7 to 0	LD[7:0]	H'00	R/W	Loudness Data These bits store the duty data for pulse output.

43.3.5 Sound Generator Tone Frequency Register (SGTFR)

SGTFR sets the tone frequency.

Bit:	7	6	5	4	3	2	1	0
Bit name:	—	TONE[6]	TONE[5]	TONE[4]	TONE[3]	TONE[2]	TONE[1]	TONE[0]
Initial value:	0	0	0	0	0	0	0	0
R/W:	R	R/(W)*	R/(W)*	R/(W)*	R/(W)*	R/(W)*	R/(W)*	R/(W)*

Note: * These bits can be written to only when TCHG = 1.

Bit	Bit Name	Initial Value	R/W	Description
7	—	0	R	Reserved This bit is always read as 0. The write value should always be 0.
6 to 0	TONE[6:0]	H'00	R/(W)*	Tone Frequency Setting These bits set the tone frequency based on the reference frequency specified by the SFS bit. Setting H'00 is prohibited.

Note: * These bits can be written to when TCHG = 1.

chanhvinh.com

43.3.6 Sound Generator Reference Frequency Register (SGSFR)

SGSFR sets the reference frequency.

Bit:	7	6	5	4	3	2	1	0
Bit name:	SFS[7]	SFS[6]	SFS[5]	SFS[4]	SFS[3]	SFS[2]	SFS[1]	SFS[0]
Initial value:	0	0	0	0	0	0	0	0
R/W:	R/(W)*	R/(W)*	R/(W)*	R/(W)*	R/(W)*	R/(W)*	R/(W)*	R/(W)*

Note: * These bits can be written to only when TCHG = 1.

Bit	Bit Name	Initial Value	R/W	Description
7 to 0	SFS[7:0]	H'00	R/(W)*	Reference Frequency Setting These bits set the reference frequency based on the operating clock (SGCLK) specified by the SGCK bit in SGCR1. Setting H'00 is prohibited.

Note: * These bits can be written to when TCHG = 1.

chanhvinh.com

43.4 Operation

43.4.1 Base Operation

(1) Initial Settings

Make sure that this module has stopped before setting registers.

The operation stop procedure, operating clock and attenuator function on/off settings are specified by the SGCR1 setting. When the attenuator function is on, the attenuation cycle is selected. The interrupt request is set by the SGIE bit in SGCSR.

(2) Activation

The operation of this module is enabled by setting the SGST bit in SGCR1 to 1 and clearing the SGEND bit in SGCR2 to 0. Set the TCHG bit in SGCR2 to 1 to cancel the write protect for SGSFR and SGTFR. Use bits SFS7 to SFS0 in SGSFR to select the reference frequency and bits TONE6 to TONE0 in SGTFR to select the tone frequency. SGLR specifies the output pulse duty. This module starts operation after writing to SGCR2, SGLR, SGTFR, and SGSFR is completed.

(3) Stopping

The operation stop procedure of this module is specified by the STPM bit in SGCR1.

When the attenuator function is off and STPM is 0, the operation is stopped by the SGST bit regardless of the SGEND bit setting. When the attenuator function is off and STPM is 1, the operation is stopped by clearing the SGST bit to 0 and setting the SGEND bit to 1.

When the attenuator function is on and STPM is 0, clearing the SGST bit to 0 stops operation even though the automatic attenuation does not end and the SGDEF bit is not set to 1. When the attenuator function is on and STPM is 1, clearing the SGST bit to 0 does not stop operation until the automatic attenuation ends and the SGDEF bit is set to 1.

chanhvinh.com

The conditions for stopping this module are listed in table 43.3 and examples of stopping operation are shown in figure 43.2.

Table 43.3 Stop Conditions

Attenuator Function Off					Attenuator Function On				
STPM	**SGST**	**SGEND**	**SGDEF**	**Operation**	**STPM**	**SGST**	**SGEND**	**SGDEF**	**Operation**
0	0	x	x	Stopped	0	0	x	x	Stopped
0	1	x	x	Output	0	1	x	x	Output
1	0	0	x	Retained*	1	0	x	0	Retained*
1	0	1	x	Stopped	1	0	x	1	Stopped
1	1	0	x	Output	1	1	x	0	Output
1	1	1	x	Output	1	1	x	1	Output

Legend:

x: Don't care

Note: * Previous state is held.

chanhvinh.com

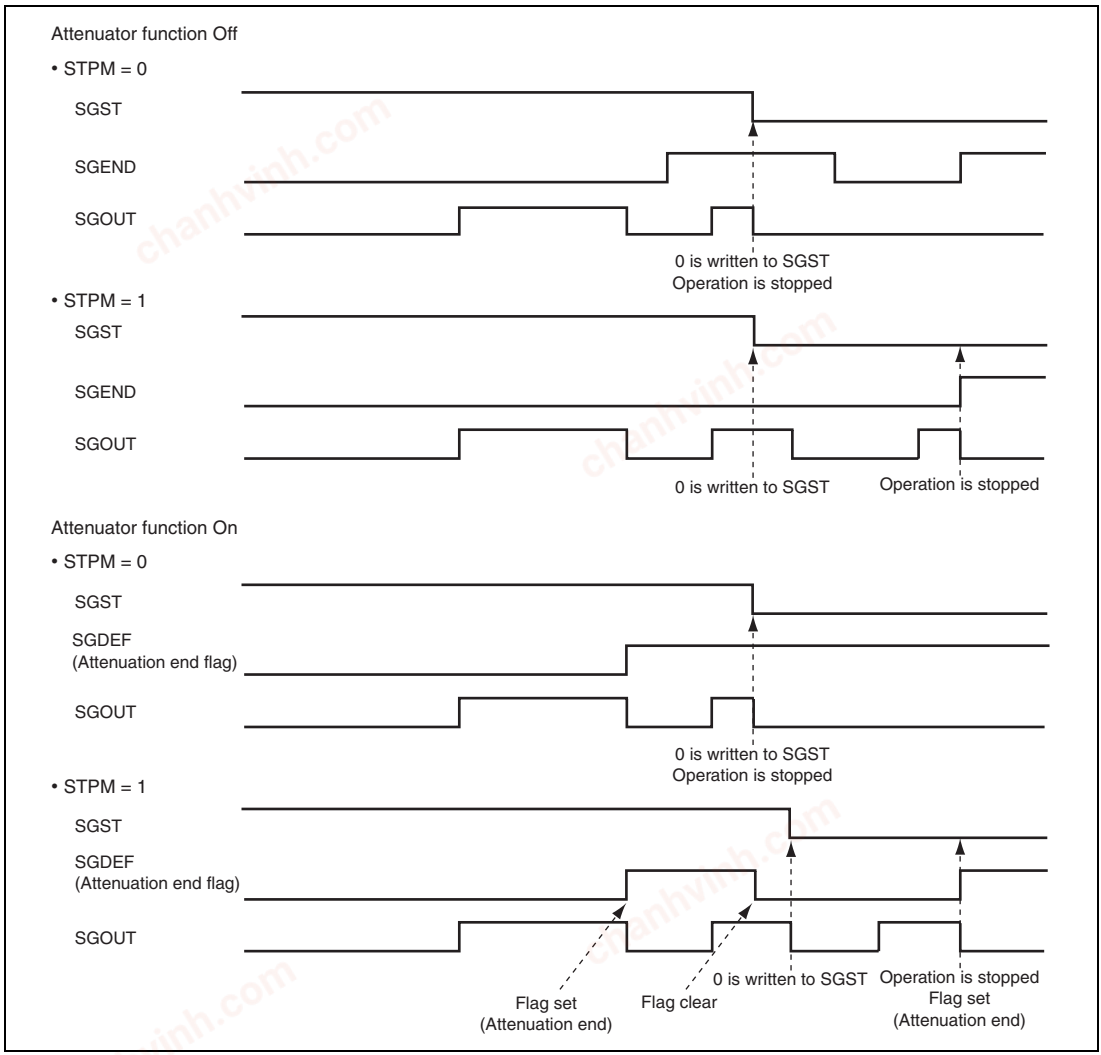

Figure 43.2 Examples of Stopping Operation

chanhvinh.com

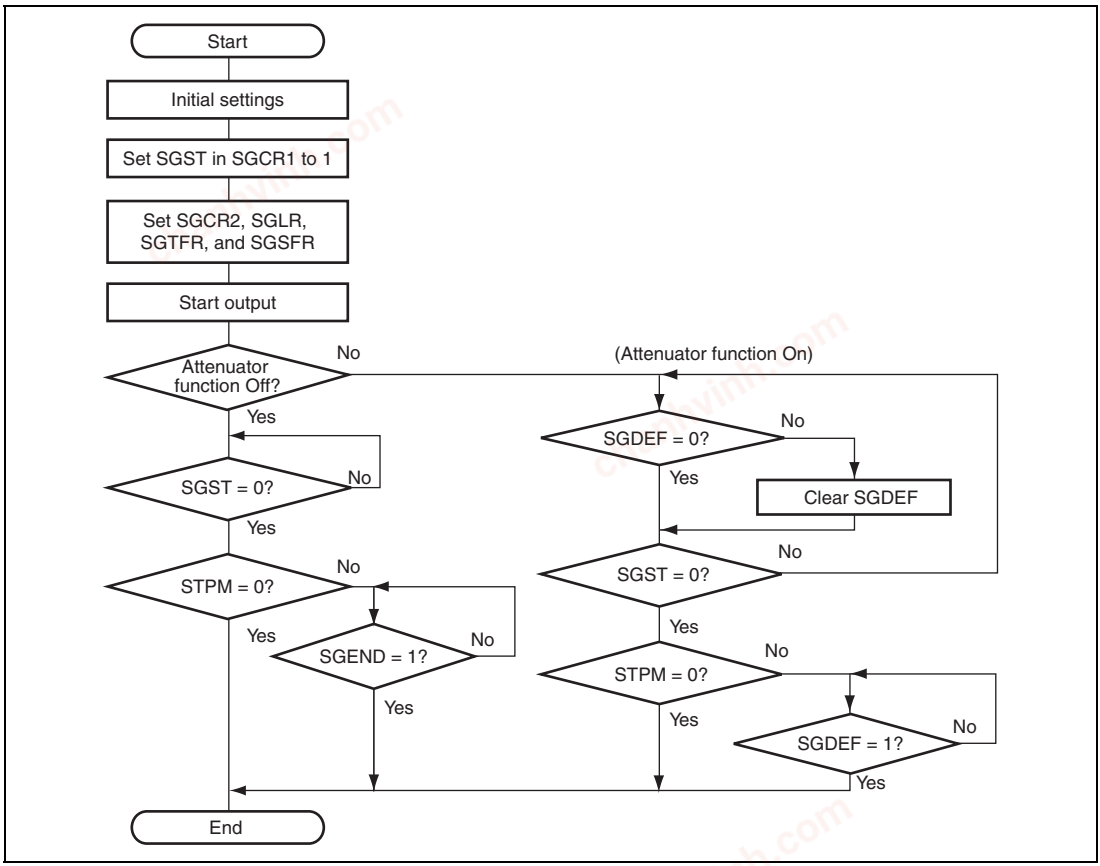

Figure 43.3 Operation Flow

chanhvinh.com

43.4.2 Tone Frequency Setting

This module provides tone frequency output in the range of 31 Hz to 20 kHz, with precision of 1% or less.

The tone frequency is calculated by:

Reference frequency (Hz) = SGCLK (Hz)/SFS

Tone frequency (Hz) = Reference frequency (Hz)/(2 × TONE)

= SGCLK (Hz)/(2 × SFS × TONE)

Setting values of the TONE bit in SGTFR and SFS bit in SGFSR are calculated by:

SFS = SGCLK (Hz)/reference frequency (Hz) (0 < SFS ≤ 255)

TONE = Reference frequency (Hz)/(2 × TONE frequency (Hz)) (0 < TONE ≤ 127)

An example of relationship between the tone frequency and output error is shown in table 43.4.

Table 43.4 Relationship between Tone Frequency and Output Error

Tone Frequency	SFS[7:0]	TONE[6:0]	Error (%)
220.00	F7	2E	0.01
329.63	ED	20	0.003
440.00	F7	17	0.01
659.26	ED	10	0.003
880.00	8E	14	0.03
1318.50	ED	8	0.04
1760.00	8E	A	0.03
2637.00	ED	4	0.004
3520.00	8E	5	0.03
5274.00	ED	2	0.002
7040.00	47	5	0.03

Note: SGCLK = 5 MHz

Since changing P0ϕ frequency affects the tone frequency, care should be taken when changing it.

chanhvinh.com

43.4.3 Auto Attenuator Function

When the auto attenuator function is on, the loudness data (LD) determines the initial duty cycle for SGOUT.

The SGOUT duty cycle is attenuated by a factor of 1/32 using the attenuation cycle set by the DPF bit in SGCR1.

The attenuation characteristics are calculated by the equation:

$$LD_n = \text{int}\,(LD_0 \times (1 - 1/32)^n)$$

LD: SGOUT duty cycle (The initial data is SGLR.)
n: Attenuation cycle number

Figure 43.4 is a graph of attenuation characteristics.

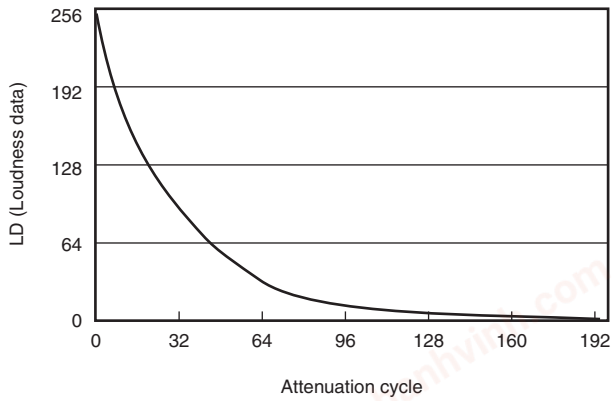

Figure 43.4 Attenuation Characteristics

chanhvinh.com

43.4.4 Output Waveform

As shown in figure 43.5, the output waveform this module is obtained by synthesis of the on-chip 8-bit PWM pulse output and the tone frequency output. The duty cycle for the on-chip 8-bit PWM pulse output is set by SGLR.

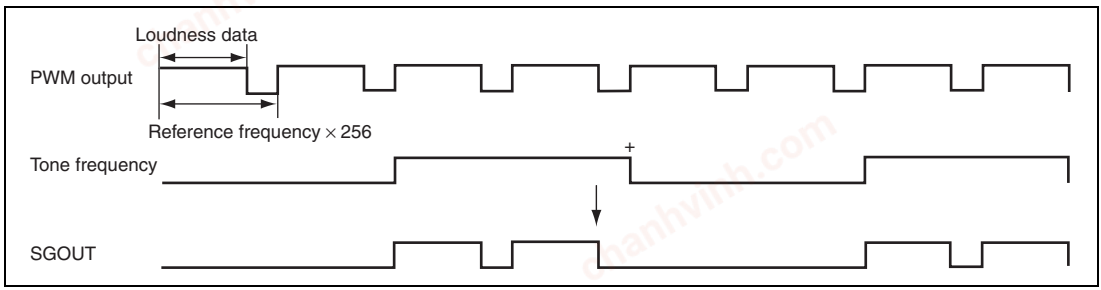

Figure 43.5 Output Waveforms

43.5 Interrupt Source

When the attenuator function is on and an automatic attenuation operation is completed, the SGDEF bit in SGCSR is set. An interrupt request is issued if the SGIE bit in SGCSR is set to 1. When STPM = 0, the SGDEF bit is set only when the first attenuation operation is completed. If the SGDEF bit is cleared during automatic attenuation, the SGDEF bit is set when the next attenuation operation is completed.

Table 43.5 Interrupt Source

Name	Interrupt Source	Interrupt Flag
SGDEI	Attenuation end	SGDEF

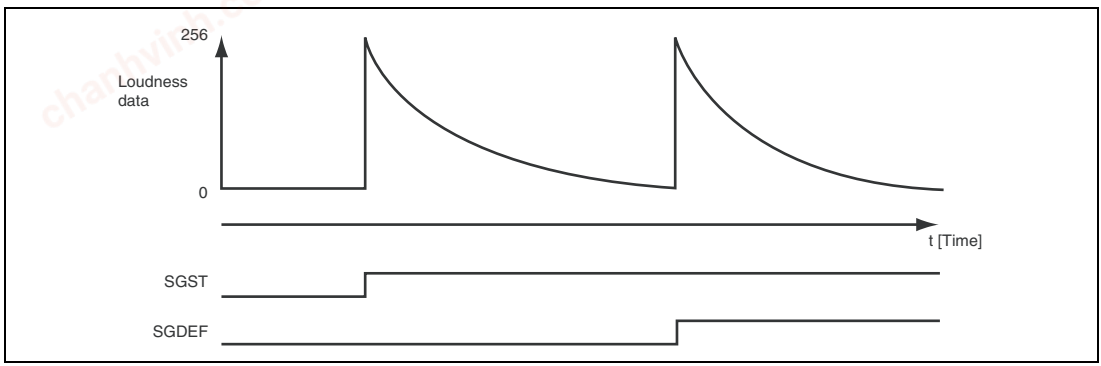

Figure 43.6 Attenuation End Flag Setting Timing

chanhvinh.com

43.6 Usage Note

43.6.1 Module Stop Mode Settings

The module stop control register enables or disables the operation of this module. With the initial setting, the operation of this module is stopped. Register access is enabled by canceling module stop mode. For details, see section 49, Power-Down Modes.

chanhvinh.com

Section 44 SD Host Interface

Renesas Electronics Corporation is only able to provide information contained in this section to parties with which we have concluded a nondisclosure agreement. Please contact one of our sales representatives for details.

For the features and electrical characteristics of the SD host interface, consult section 1, Overview and section 52, Electrical Characteristics, respectively.

chanhvinh.com

chanhvinh.com
chanhvinh.com
chanhvinh.com

chanhvinh.com

Section 45 MMC Host Interface

The MMC host interface is a host controller conforming to the JEDEC Standard JESD84-A44 that allows connection with devices with the MMC interface.

45.1 Features

- Supports 1/4/8-bit MMC bus
- Supports the Single Data Rate only
- MMC clock frequency = P1ϕ frequency/2^n (n = 1 to 10).
- Data buffer: 512 bytes × 2
- Three types of interrupt requests: normal operation, error/timeout, card detection.
- DMA transfer requests: buffer write and buffer read
- Card detection function

chanhvinh.com

Figure 45.1 shows a block diagram of this module.

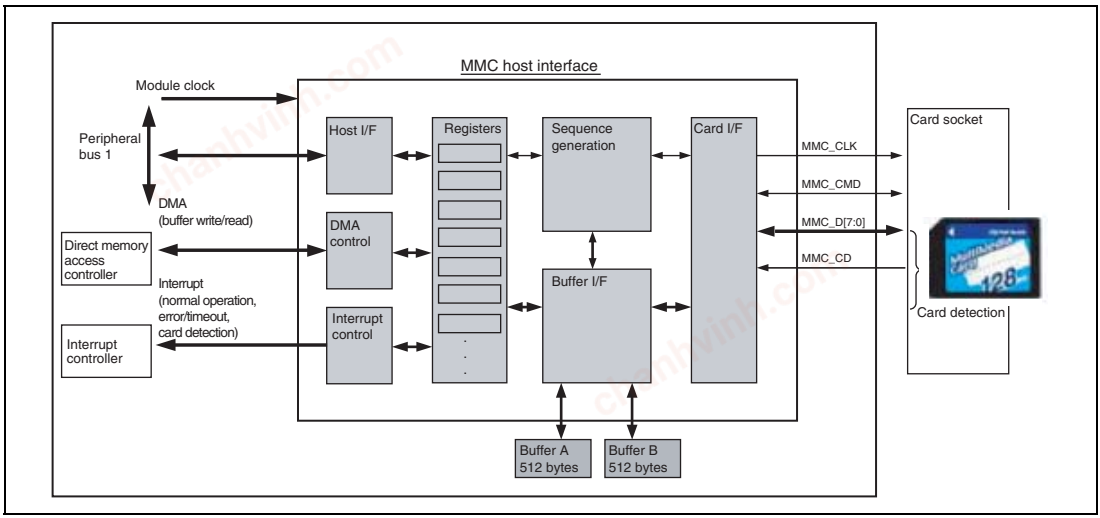

Figure 45.1 Block Diagram of MMC Host Interface

45.2 Input/Output Pins

Table 45.1 shows the pin configuration of this module.

Table 45.1 Pin Configuration

Pin Name	I/O	Function
MMC_CLK	Output	MMC clock
MMC_CMD	Input/output	Command/response
MMC_D[7:0]	Input/output	Transmit/receive data
MMC_CD	Input	Card detection*

Note: * Check the specifications of the card socket to be used before connection.

chanhvinh.com

45.3 Register Descriptions

Table 45.2 shows the register configuration of this module.

Table 45.2 Register Configuration

Register Name	Abbreviation	R/W	Address	Access Size
Command setting register	CE_CMD_SET	R/W	H'E8030800	16, 32
Argument register	CE_ARG	R/W	H'E8030808	16, 32
Argument register for automatically-issued CMD12	CE_ARG_CMD12	R/W	H'E803080C	16, 32
Command control register	CE_CMD_CTRL	R/W	H'E8030810	16, 32
Transfer block setting register	CE_BLOCK_SET	R/W	H'E8030814	16, 32
Clock control register	CE_CLK_CTRL	R/W	H'E8030818	16, 32
Buffer access configuration register	CE_BUF_ACC	R/W	H'E803081C	16, 32
Response register 3	CE_RESP3	R	H'E8030820	16, 32
Response register 2	CE_RESP2	R	H'E8030824	16, 32
Response register 1	CE_RESP1	R	H'E8030828	16, 32
Response register 0	CE_RESP0	R	H'E803082C	16, 32
Response register for automatically-issued CMD12	CE_RESP_CMD12	R	H'E8030830	16, 32
Data register	CE_DATA	R/W	H'E8030834	16*, 32
Interrupt flag register	CE_INT	R/W	H'E8030840	16, 32
Interrupt enable register	CE_INT_EN	R/W	H'E8030844	16, 32
Status register 1	CE_HOST_STS1	R	H'E8030848	16, 32
Status register 2	CE_HOST_STS2	R	H'E803084C	16, 32
DMA mode setting register	CE_DMA_MODE	R/W	H'E803085C	16, 32
Card detection/port control register	CE_DETECT	R/W	H'E8030870	16, 32
Special mode setting register	CE_ADD_MODE	R/W	H'E8030874	16, 32
Version register	CE_VERSION	R/W	H'E803087C	16, 32

Note: Do not access registers other than those shown above.

Note: * For 16-bit access, H'E8030834 is the only address for access.

chanhvinh.com

45.3.1 Command Setting Register (CE_CMD_SET)

CE_CMD_SET sets a command sequence.

The command sequence starts when the settings have been made in bits 31 to 16. Note that writing to CE_CMD_SET is disabled while a command sequence is proceeding (i.e., the value of CMDSEQ in CE_HOST_STS1 is 1). CE_CMD_SET should be set according to the description in section 45.7.12, Setting Values of CE_CMD_SET.

Bit:	31	30	29	28	27	26	25	24	23	22	21	20	19	18	17	16
	—	—	CMD[5:0]						RTYP[1:0]		RBSY	—	WDAT	DWEN	CMLTE	CMD12EN
Initial value:	0	0	0	0	0	0	0	0	0	0	0	0	0	0	0	0
R/W:	R	R	R/W	R/W	R/W	R/W	R/W	R/W	R/W	R/W	R/W	R	R/W	R/W	R/W	R/W

Bit:	15	14	13	12	11	10	9	8	7	6	5	4	3	2	1	0
	RIDXC[1:0]		RCRC7C[1:0]		—	CRC16C	—	CRCSTE	TBIT	OPDM	—	—	SBIT	—	DATW[1:0]	
Initial value:	0	0	0	0	0	0	0	0	0	0	0	0	0	0	0	0
R/W:	R/W	R/W	R/W	R/W	R	R/W	R	R/W	R/W	R/W	R	R	R/W	R	R/W	R/W

Bit	Bit Name	Initial Value	R/W	Description
31, 30	—	00	R	Reserved These bits are always read as 0. The write value should always be 0.
29 to 24	CMD[5:0]	All 0	R/W	Command Index These bits set a command index ([45:40]). Note: Setting a command index in these bits initiates the command sequence.
23, 22	RTYP[1:0]	00	R/W	Response Type 00: No response 01: 6-byte response (R1, R1b, R3, R4, R5) 10: 17-byte response (R2) 11: Setting prohibited
21	RBSY	0	R/W	Response Busy Select Selects whether “busy” is involved in response reception. 0: No response busy 1: Response busy involved (R1b)

chanhvinh.com

Bit	Bit Name	Initial Value	R/W	Description
20	—	0	R	Reserved This bit is always read as 0. The write value should always be 0.
19	WDAT	0	R/W	Presence/Absence of Data 0: No data 1: With data
18	DWEN	0	R/W	Read/Write (valid when “with data” is selected) 0: Read from the card 1: Write to the card
17	CMLTE	0	R/W	Single/Multi Block Transfer Select (valid when “with data” is selected) 0: Single-block transfer 1: Multi-block transfer
16	CMD12EN	0	R/W	Automatic CMD12 Issuance (valid when multi-block transfer is selected) 0: Does not issue CMD12 automatically. 1: Issues CMD12 automatically (= automatic CMD12) For details of automatic CMD12 issuance, see section 45.6.4, Automatic CMD12 Issuance. Note: Set the transfer block size to 512 bytes. Set RBSY to 0.
15, 14	RIDXC[1:0]	00	R/W	Response Index Check Specify the items to be checked for [45:40] of a 6-byte response or [133:128] of a 17-byte response. 00: Checks the response index (ensure that the response index matches the command index.) 01: Checks the check bits (ensure that the bits are all 1.) 10: No checking 11: Setting prohibited

chanhvinh.com

Bit	Bit Name	Initial Value	R/W	Description
13, 12	RCRC7C [1:0]	00	R/W	Response CRC7 Check Specify the items to be checked for [7:1] of a 6-byte response or a 17-byte response. 00: Checks CRC7 (set the response type to 01) 01: Checks the check bits (set the response type to 01) 10: Checks internal CRC7 (R2 only) (set the response type to 10) 11: No checking
11	—	0	R	Reserved The write value should always be 0.
10	CRC16C	0	R/W	CRC16 Check in Reception (valid when “with data” and “read” are selected) 0: Checks CRC16 1: Does not check CRC16 (use when CMD14)
9	—	0	R	Reserved This bit is always read as 0. The write value should always be 0.
8	CRCSTE	0	R/W	CRC Status Reception (valid when “with data” and “write” are selected) 0: Receives CRC status 1: Does not receive CRC status (use when CMD19)
7	TBIT	0	R/W	Transmission Bit Setting 0: Sets the transmission bit ([46]) to 1. 1: Sets the transmission bit ([46]) to 0.
6	OPDM	0	R/W	Open-Drain Output Mode 0: Normal output 1: Open-drain output Note: This setting is only applied to the MMC_CMD line.
5, 4	—	All 0	R	Reserved These bits are always read as 0. The write value should always be 0.

chanhvinh.com

Bit	Bit Name	Initial Value	R/W	Description
3	SBIT	0	R/W	Read Data Start Bit Detection (valid when "with data" and "read" are selected) 0: Detects the start bit when the MMC_D signals set by DATW are all 0. 1: Detects the start bit when MMC_D[0] is 0.
2	—	0	R	Reserved This bit is always read as 0. The write value should always be 0.
1, 0	DATW[1:0]	00	R/W	Data Bus Width Setting (valid when "with data" is selected) 00: 1 bit 01: 4 bits 10: 8 bits 11: Setting prohibited

chanhvinh.com

45.3.2 Argument Register (CE_ARG)

CE_ARG sets the argument for the command to be transmitted. Set CE_ARG before starting the command sequence.

Bit:	31	30	29	28	27	26	25	24	23	22	21	20	19	18	17	16
	ARG[31:16]															
Initial value:	0	0	0	0	0	0	0	0	0	0	0	0	0	0	0	0
R/W:	R/W	R/W	R/W	R/W	R/W	R/W	R/W	R/W	R/W	R/W	R/W	R/W	R/W	R/W	R/W	R/W

Bit:	15	14	13	12	11	10	9	8	7	6	5	4	3	2	1	0
	ARG[15:0]															
Initial value:	0	0	0	0	0	0	0	0	0	0	0	0	0	0	0	0
R/W:	R/W	R/W	R/W	R/W	R/W	R/W	R/W	R/W	R/W	R/W	R/W	R/W	R/W	R/W	R/W	R/W

Bit	Bit Name	Initial Value	R/W	Description
31 to 0	ARG[31:0]	H'00000000	R/W	These bits set [39:8] of a command. Note: Set the argument of automatically-issued CMD12 by CE_ARG_CMD12.

45.3.3 Argument Register for Automatically-Issued CMD12 (CE_ARG_CMD12)

CE_ARG_CMD12 is used to set the argument for the automatically-issued CMD12 in multi-block transfer.

For the automatically-issued CMD12, see section 45.6.4, Automatic CMD12 Issuance. Set CE_ARG_CMD12 before starting the command sequence.

Bit:	31	30	29	28	27	26	25	24	23	22	21	20	19	18	17	16
	C12ARG[31:16]															
Initial value:	0	0	0	0	0	0	0	0	0	0	0	0	0	0	0	0
R/W:	R/W	R/W	R/W	R/W	R/W	R/W	R/W	R/W	R/W	R/W	R/W	R/W	R/W	R/W	R/W	R/W

Bit:	15	14	13	12	11	10	9	8	7	6	5	4	3	2	1	0
	C12ARG[15:0]															
Initial value:	0	0	0	0	0	0	0	0	0	0	0	0	0	0	0	0
R/W:	R/W	R/W	R/W	R/W	R/W	R/W	R/W	R/W	R/W	R/W	R/W	R/W	R/W	R/W	R/W	R/W

Bit	Bit Name	Initial Value	R/W	Description
31 to 0	C12ARG[31:0]	H'00000000	R/W	These bits set [39:8] of a command.

chanhvinh.com

45.3.4 Command Control Register (CE_CMD_CTRL)

CE_CMD_CTRL is used to terminate a command sequence forcibly.

Bit:	31	30	29	28	27	26	25	24	23	22	21	20	19	18	17	16
	—	—	—	—	—	—	—	—	—	—	—	—	—	—	—	—
Initial value:	0	0	0	0	0	0	0	0	0	0	0	0	0	0	0	0
R/W:	R	R	R	R	R	R	R	R	R	R	R	R	R	R	R	R

Bit:	15	14	13	12	11	10	9	8	7	6	5	4	3	2	1	0
	—	—	—	—	—	—	—	—	—	—	—	—	—	—	—	BREAK
Initial value:	0	0	0	0	0	0	0	0	0	0	0	0	0	0	0	0
R/W:	R	R	R	R	R	R	R	R	R	R	R	R	R	R	R	R/W

Bit	Bit Name	Initial Value	R/W	Description
31 to 1	—	All 0	R	Reserved These bits are always read as 0. The write value should always be 0.
0	BREAK	0	R/W	Forcible Termination of Command Sequence To discontinue the current command sequence, write 1 to this bit while the bit is 0 and then write 0. After the above procedure, check if the value of the CMDSEQ bit in CE_HOST_STS1 has become 0 and then perform a software reset. Note: Since a software reset returns the register value to the initial value, the register needs be set again.

chanhvinh.com

45.3.5 Transfer Block Setting Register (CE_BLOCK_SET)

CE_BLOCK_SET specifies the size of the block and the number of blocks for the data to be transferred. Set CE_BLOCK_SET before starting the command sequence.

Bit:	31	30	29	28	27	26	25	24	23	22	21	20	19	18	17	16
	BLKCNT[15:0]															
Initial value:	0	0	0	0	0	0	0	0	0	0	0	0	0	0	0	0
R/W:	R/W	R/W	R/W	R/W	R/W	R/W	R/W	R/W	R/W	R/W	R/W	R/W	R/W	R/W	R/W	R/W

Bit:	15	14	13	12	11	10	9	8	7	6	5	4	3	2	1	0
	BLKSIZ[15:0]															
Initial value:	0	0	0	0	0	0	1	0	0	0	0	0	0	0	0	0
R/W:	R/W	R/W	R/W	R/W	R/W	R/W	R/W	R/W	R/W	R/W	R/W	R/W	R/W	R/W	R/W	R/W

Bit	Bit Name	Initial Value	R/W	Description
31 to 16	BLKCNT [15:0]	H'0000	R/W	Number of Blocks for Transfer Note: This setting is valid for multi-block transfer.
15 to 0	BLKSIZ [15:0]	H'0200	R/W	Transfer Block Size Note: Transfer block size should be set as follows. • Single-block transfer: 1 to 512 bytes • Multi-block transfer: 512 bytes

chanhvinh.com

45.3.6 Clock Control Register (CE_CLK_CTRL)

CE_CLK_CTRL controls the MMC clock and sets timeout values. Do not change the setting of this register while a command sequence is in progress.

Bit:	31	30	29	28	27	26	25	24	23	22	21	20	19	18	17	16
	—	—	—	—	—	—	—	CLKEN	—	—	—	—	CLKDIV[3:0]			
Initial value:	0	0	0	0	0	0	0	0	0	0	0	0	0	0	0	0
R/W:	R	R	R	R	R	R	R	R/W	R	R	R	R	R/W	R/W	R/W	R/W

Bit:	15	14	13	12	11	10	9	8	7	6	5	4	3	2	1	0
	—	—	SRSPTO[1:0]		SRBSYTO[3:0]				SRWDTO[3:0]				—	—	—	—
Initial value:	0	0	0	0	0	0	0	0	0	0	0	0	0	0	0	0
R/W:	R	R	R/W	R/W	R/W	R/W	R/W	R/W	R/W	R/W	R/W	R/W	R	R	R	R

Bit	Bit Name	Initial Value	R/W	Description
31 to 25	—	All 0	R	Reserved These bits are always read as 0. The write value should always be 0.
24	CLKEN	0	R/W	MMC Clock Output Control 0: Does not output the MMC clock (tied to low level) 1: Outputs the MMC clock
23 to 20	—	00	R	Reserved These bits are always read as 0. The write value should always be 0.
19 to 16	CLKDIV[3:0]	0000	R/W	MMC Clock Frequency Setting 0000: P1ϕ/2 0001: P1ϕ/2^2 0111: P1ϕ/2^8 1000: P1ϕ/2^9 1001: P1ϕ/2^{10} 1010 to 1111: Setting prohibited
15, 14	—	0	R	Reserved These bits are always read as 0. The write value should always be 0.

chanhvinh.com

Bit	Bit Name	Initial Value	R/W	Description
13, 12	SRSPTO [1:0]	00	R/W	Response Timeout Setting Specifies the timeout period for the RSPTO bit of CE_INT. 00: 64 MMC clock cycles 01: 128 MMC clock cycles 10: 256 MMC clock cycles 11: Setting prohibited
11 to 8	SRBSYTO [3:0]	0000	R/W	Response Busy Timeout Setting Specifies the timeout period for the RBSYTO bit of CE_INT. 0000: 2^{14} MMC clock cycles 0001: 2^{15} MMC clock cycles : 1110: 2^{28} MMC clock cycles 1111: 2^{29} MMC clock cycles
7 to 4	SRWDTO [3:0]	0000	R/W	Write Data/Read Data Timeout Setting Specifies the timeout period for the WDATTO and RDATTO bits of CE_INT. 0000: 2^{14} MMC clock cycles 0001: 2^{15} MMC clock cycles : 1110: 2^{28} MMC clock cycles 1111: 2^{29} MMC clock cycles
3 to 0	—	0000	R	Reserved These bits are always read as 0. The write value should always be 0.

chanhvinh.com

45.3.7 Buffer Access Configuration Register (CE_BUF_ACC)

CE_BUF_ACC configures the method of accessing data registers and mode of DMA transfer. Do not change the setting of this register while a command sequence is in progress. For explanation of the buffers, see section 45.6.3, Buffer Structure and Buffer Accesses.

Bit:	31	30	29	28	27	26	25	24	23	22	21	20	19	18	17	16
	—	—	—	—	—	—	DMAW EN	DMAR EN	—	—	—	—	—	—	BUSW	ATYP
Initial value:	0	0	0	0	0	0	0	0	0	0	0	0	0	0	0	0
R/W:	R	R	R	R	R	R	R/W	R/W	R	R	R	R	R	R	R/W	R/W

Bit:	15	14	13	12	11	10	9	8	7	6	5	4	3	2	1	0
	—	—	—	—	—	—	—	—	—	—	—	—	—	—	—	—
Initial value:	0	0	0	0	0	0	0	0	0	0	0	0	0	0	0	0
R/W:	R	R	R	R	R	R	R	R	R	R	R	R	R	R	R	R

Bit	Bit Name	Initial Value	R/W	Description
31 to 26	—	All 0	R	Reserved These bits are always read as 0. The write value should always be 0.
25	DMAWEN	0	R/W	Buffer Write DMA Transfer Request Enable 0: Disables DMA transfer request for buffer writing 1: Enables DMA transfer request for buffer writing
24	DMAREN	0	R/W	Buffer Read DMA Transfer Request Enable 0: Disables DMA transfer request for buffer reading 1: Enables DMA transfer request for buffer reading
23 to 18	—	All 0	R	Reserved These bits are always read as 0. The write value should always be 0.
17	BUSW	0	R/W	Data register access size selection 0: When access to CE_DATA in 32-bit. 1: When access to CE_DATA in 16-bit.
16	ATYP	0	R/W	0: When not swapped byte-wise. 1: When swapped byte-wise. Note: For explanation of the buffers, see section 45.6.3, Buffer Structure and Buffer Accesses.
15 to 0	—	All 0	R	Reserved These bits are always read as 0. The write value should always be 0.

chanhvinh.com

45.3.8 Response Registers 3 to 0 (CE_RESP3 to CE_RESP0)

CE_RESP3 to CE_RESP0 are the registers for storing the response that has been received. For the formats of response values, see section 45.6.1, Command/Response Formats.

- CE_RESP3

Bit:	31	30	29	28	27	26	25	24	23	22	21	20	19	18	17	16
	RSP[127:112]															
Initial value:	0	0	0	0	0	0	0	0	0	0	0	0	0	0	0	0
R/W:	R	R	R	R	R	R	R	R	R	R	R	R	R	R	R	R

Bit:	15	14	13	12	11	10	9	8	7	6	5	4	3	2	1	0
	RSP[111:96]															
Initial value:	0	0	0	0	0	0	0	0	0	0	0	0	0	0	0	0
R/W:	R	R	R	R	R	R	R	R	R	R	R	R	R	R	R	R

Bit	Bit Name	Initial Value	R/W	Description
31 to 0	RSP[127:96]	H'00000000	R	[127:96] of a 17-byte response are stored.

- CE_RESP2

Bit:	31	30	29	28	27	26	25	24	23	22	21	20	19	18	17	16
	RSP[95:80]															
Initial value:	0	0	0	0	0	0	0	0	0	0	0	0	0	0	0	0
R/W:	R	R	R	R	R	R	R	R	R	R	R	R	R	R	R	R

Bit:	15	14	13	12	11	10	9	8	7	6	5	4	3	2	1	0
	RSP[79:64]															
Initial value:	0	0	0	0	0	0	0	0	0	0	0	0	0	0	0	0
R/W:	R	R	R	R	R	R	R	R	R	R	R	R	R	R	R	R

Bit	Bit Name	Initial Value	R/W	Description
31 to 0	RSP[95:64]	H'00000000	R	[95:64] of 17-byte response are stored.

chanhvinh.com

- CE_RESP1

Bit:	31	30	29	28	27	26	25	24	23	22	21	20	19	18	17	16
	RSP[63:48]															
Initial value:	0	0	0	0	0	0	0	0	0	0	0	0	0	0	0	0
R/W:	R	R	R	R	R	R	R	R	R	R	R	R	R	R	R	R

Bit:	15	14	13	12	11	10	9	8	7	6	5	4	3	2	1	0
	RSP[47:32]															
Initial value:	0	0	0	0	0	0	0	0	0	0	0	0	0	0	0	0
R/W:	R	R	R	R	R	R	R	R	R	R	R	R	R	R	R	R

Bit	Bit Name	Initial Value	R/W	Description
31 to 0	RSP[63:32]	H'00000000	R	[63:32] of a 17-byte response are stored.

- CE_RESP0

Bit:	31	30	29	28	27	26	25	24	23	22	21	20	19	18	17	16
	RSP[31:16]															
Initial value:	0	0	0	0	0	0	0	0	0	0	0	0	0	0	0	0
R/W:	R	R	R	R	R	R	R	R	R	R	R	R	R	R	R	R

Bit:	15	14	13	12	11	10	9	8	7	6	5	4	3	2	1	0
	RSP[15:0]															
Initial value:	0	0	0	0	0	0	0	0	0	0	0	0	0	0	0	0
R/W:	R	R	R	R	R	R	R	R	R	R	R	R	R	R	R	R

Bit	Bit Name	Initial Value	R/W	Description
31 to 0	RSP[31:0]	H'00000000	R	[39:8] of a 6-byte response or [17:0] of a 17-byte response are stored. Note: The response to the automatically-issued CMD12 is stored in CE_RESP_CMD12.

chanhvinh.com

45.3.9 Response Register for Automatically-Issued CMD12 (CE_RESP_CMD12)

CE_RESP_CMD12 is the register for storing the response to the automatically-issued CMD12.

Bit:	31	30	29	28	27	26	25	24	23	22	21	20	19	18	17	16
	RSP12[31:16]															
Initial value:	0	0	0	0	0	0	0	0	0	0	0	0	0	0	0	0
R/W:	R	R	R	R	R	R	R	R	R	R	R	R	R	R	R	R

Bit:	15	14	13	12	11	10	9	8	7	6	5	4	3	2	1	0
	RSP12[15:0]															
Initial value:	0	0	0	0	0	0	0	0	0	0	0	0	0	0	0	0
R/W:	R	R	R	R	R	R	R	R	R	R	R	R	R	R	R	R

Bit	Bit Name	Initial Value	R/W	Description
31 to 0	RSP12[31:0]	H'00000000	R	[39:8] of a response to the automatically-issued CMD12 are stored.

45.3.10 Data Register (CE_DATA)

CE_DATA is used to access the buffers of this module. In 16-bit access, only DATA[31:16] is accessible. For the write/read data formats, see section 45.6.2, Data Block Format.

Bit:	31	30	29	28	27	26	25	24	23	22	21	20	19	18	17	16
	DATA[31:16]															
Initial value:	0	0	0	0	0	0	0	0	0	0	0	0	0	0	0	0
R/W:	R/W	R/W	R/W	R/W	R/W	R/W	R/W	R/W	R/W	R/W	R/W	R/W	R/W	R/W	R/W	R/W

Bit:	15	14	13	12	11	10	9	8	7	6	5	4	3	2	1	0
	DATA[15:0]															
Initial value:	0	0	0	0	0	0	0	0	0	0	0	0	0	0	0	0
R/W:	R/W	R/W	R/W	R/W	R/W	R/W	R/W	R/W	R/W	R/W	R/W	R/W	R/W	R/W	R/W	R/W

Bit	Bit Name	Initial Value	R/W	Description
31 to 0	DATA[31:0]	H'00000000	R/W	Buffer write/read data [31:0]

chanhvinh.com

45.3.11 Interrupt Flag Register (CE_INT)

CE_INT indicates various statuses during execution of a command sequence. Each bit is set when its setting condition has been met. To clear flag(s), write 0 only to the bit(s) to be cleared and write 1 to the other bits.

For the operation in the case of an error or timeout, see section 45.6.5, Operation in the Case of Error/Timeout.

Bit:	31	30	29	28	27	26	25	24	23	22	21	20	19	18	17	16
	—	—	—	—	—	CMD12 DRE	CMD12 RBE	CMD12 CRE	DTRAN E	BUFR E	BUFW EN	BUFR EN	—	—	RBSY E	CRSP E
Initial value:	0	0	0	0	0	0	0	0	0	0	0	0	0	0	0	0
R/W:	R	R	R	R	R	R/W	R/W	R/W	R/W	R/W	R/W	R/W	R	R	R/W	R/W

Bit:	15	14	13	12	11	10	9	8	7	6	5	4	3	2	1	0
	CMD VIO	BUF VIO	—	—	WDAT ERR	RDAT ERR	RIDX ERR	RSP ERR	—	—	—	CRCS TO	WDAT TO	RDAT TO	RBSY TO	RSP TO
Initial value:	0	0	0	0	0	0	0	0	0	0	0	0	0	0	0	0
R/W:	R/W	R/W	R	R	R/W	R/W	R/W	R/W	R	R	R	R/W	R/W	R/W	R/W	R/W

Bit	Bit Name	Initial Value	R/W	Description
31 to 27	—	00	R	Reserved These bets are always read as 0. The writing value should always be 0.
26	CMD12DRE	0	R/W*	Automatic CMD12 Issuance & Buffer Read Complete [Setting condition] Response busy for automatically-issued CMD12 and buffer reading have been completed. [Clearing condition] Writing a 0 to this bit Note: When CMD12DRE has been set, CMD12RBE, CMD12CRE, and BUFRE have also been set. So, these bits should be cleared as well.
25	CMD12RBE	0	R/W*	Automatic CMD12 Issuance Response Busy Complete [Setting condition] Reception of the response and response busy for an automatically-issued CMD12 have been completed. [Clearing condition] Writing a 0 to this bit Note: When CMD12RBE is set, CMD12CRE is also set. So, clear the bit as well. When CMD12RBE is set during a multi-block write, DTRANE is also set. So clear the bit as well.

chanhvinh.com

Bit	Bit Name	Initial Value	R/W	Description
24	CMD12CRE	0	R/W*	Automatic CMD12 Response Complete [Setting conditions] The response to an automatically-issued CMD12 has been received. [Clearing condition] Writing a 0 to this bit
23	DTRANE	0	R/W*	Data Transmission Complete [Setting conditions] Transmission of all blocks of data has been completed. • When configured to receive CRC status: Completion of busy (data busy) after reception of CRC status • When configured not to receive CRC status: Completion of data transmission [Clearing condition] Writing a 0 to this bit
22	BUFRE	0	R/W*	Buffer Read Complete [Setting conditions] All blocks of data have been received and the data have been read from the buffer [Clearing condition] Writing a 0 to this bit
21	BUFWEN	0	R/W*	Buffer Write Ready [Setting conditions] The buffer has become empty and ready for writing. [Clearing condition] Writing a 0 to this bit Note: This bit is not set when DMA transfer request for buffer writing is enabled.
20	BUFREN	0	R/W*	Buffer Read Ready [Setting conditions] Transfer block size of data have been stored in the buffer and it has become ready for reading [Clearing condition] Writing a 0 to this bit Note: This bit is not set when DMA transfer request for buffer reading is enabled.
19, 18	—	0	R	Reserved These bits are always read as 0.The write value should always be 0.

chanhvinh.com

Bit	Bit Name	Initial Value	R/W	Description
17	RBSYE	0	R/W*	Response Busy Complete [Setting condition] Reception of a response and response busy have been completed. [Clearing condition] Writing a 0 to this bit Note: When RBSYE has been set, CRSPE has also been set. So, this bit should be cleared as well. Completion of reception of the response and response busy for automatically-issued CMD12 is reflected in CMD12RBE.
16	CRSPE	0	R/W*	Command/Response Complete [Setting conditions] A command has been transmitted or a response has been received • When configured not to receive response: A command has been transmitted • When configured to receive 6- or 17-byte response: A response has been received [Clearing condition] Writing a 0 to this bit Note: Completion of reception of the response to automatically-issued CMD12 is reflected in CMD12CRE.

chanhvinh.com

Bit	Bit Name	Initial Value	R/W	Description
15	CMDVIO	0	R/W*	Command Issuance Error [Setting conditions] Illegal setting has been made in CE_CMD_SET or CE_BLOCK_SET. • During execution of a command sequence: Writing to CMD[5:0] in CE_CMD_SET (The command sequence is not stopped automatically.) • At the start of command sequence: Writing to CMD[5:0] in CE_CMD_SET when the registers have been set for one of the following combinations of selection — No response + response busy — No response + with data — No data + automatic CMD12 issuance — With data + single-block transfer + automatic CMD12 issuance — With data + response busy + automatic CMD12 issuance — With data + transfer block size = 0 — With data + transfer block size ≥ 513 — With data + multi-block transfer + number of blocks for transfer = 0 [Clearing condition] Writing a 0 to this bit

chanhvinh.com

Bit	Bit Name	Initial Value	R/W	Description
14	BUFVIO	0	R/W*	Buffer Access Error [Setting conditions] Illegal buffer access has been attempted. • CE_ DATA has been accessed exceeding the block size set in BLKSIZ[15:0] in CE_BLOCK_SET • While data is being read from the card: CE_DATA has been accessed with BUFREN not set (when DMA is used, with no DMA transfer request asserted for buffer reading) • While data is being written to the card: CE_DATA has been accessed with BUFWEN not set (when DMA is used, with no DMA transfer request asserted for buffer writing) [Clearing condition] Writing a 0 to this bit Note: When BUFVIO has been set, the command sequence is not stopped automatically.
13, 12	—	00	R	Reserved These bits are always read as 0. The write value should always be 0.
11	WDATERR	0	R/W*	Write Data Error [Setting conditions] Error is found in the data that has been written. • Error is in the status of the CRC status • Error is in the end bits of the CRC status [Clearing condition] Writing a 0 to this bit Note: When WDATERR has been set, the command sequence is stopped automatically.
10	RDATERR	0	R/W*	Read Data Error [Setting conditions] Error is found in the read data. • Error is in CRC16 of the read data • Error is in the end bits of the read data [Clearing condition] Writing a 0 to this bit Note: When RDATERR has been set, the command sequence is stopped automatically.

chanhvinh.com

Bit	Bit Name	Initial Value	R/W	Description
9	RIDXERR	0	R/W*	Response Index Error [Setting conditions] Error has been found in the index value of the response. • When an error has been found in [45:40] of a 6-byte response (including automatically-issued CMD12) or [133:128] of a 17-byte response (The items to be checked are set by RIDXC in CE_CMD_SET.) [Clearing condition] Writing a 0 to this bit Note: When RIDXERR has been set, the command sequence is stopped automatically.
8	RSPERR	0	R/W*	Response Error [Setting conditions] Error has been found in the response values of the response. • Transmission bit in the response is high • Error is in the end bits of the response • When an error has been found in [7:1] of a 6-byte response (including automatically-issued CMD12) or a 17-byte response (The items to be checked are set by RCRC7C in CE_CMD_SET.) [Clearing condition] Writing a 0 to this bit Note: When RSPERR has been set, the command sequence is stopped automatically.
7 to 5	—	All 0	R	Reserved These bits are always read as 0. The write value should always be 0.
4	CRCSTO	0	R/W*	CRC Status Timeout [Setting conditions] CRC status could not be received [Clearing condition] Writing a 0 to this bit Note: The command sequence is not stopped even if CRCSTO is set.

chanhvinh.com

Bit	Bit Name	Initial Value	R/W	Description
3	WDATTO	0	R/W*	Write Data Timeout [Setting conditions] The busy status remains unchanged after the period set by SRWDTO in CE_CLK_CTRL after the CRC status was received. [Clearing condition] Writing a 0 to this bit Note: The command sequence is not stopped even if WDATTO is set.
2	RDATTO	0	R/W*	Read Data Timeout [Setting conditions] • Read data could not be received within the period set by SRWDTO in CE_CLK_CTRL after the read command was transmitted • Read data could not be received within the period set by SRWDTO in CE_CLK_CTRL after the read data was received. [Clearing condition] Writing a 0 to this bit Note: The command sequence is not stopped even if RDATTO is set.
1	RBSYTO	0	R/W*	Response Busy Timeout [Setting conditions] The busy status remains unchanged after the period set by SRBSYTO in CE_CLK_CTRL after the command (including automatically-issued CMD12) was transmitted. [Clearing condition] Writing a 0 to this bit Note: The command sequence is not stopped even if RBSYTO is set.
0	RSPTO	0	R/W*	Response Timeout [Setting conditions] Response could not be received within the period set by SRSPTO in CE_CLK_CTRL after the command (including automatically-issued CMD12) was transmitted. [Clearing condition] Writing a 0 to this bit Note: The command sequence is not stopped even if RSPTO is set.

Note: * A 0 is the only value that can be written to these bits. Writing a 1 is ignored.

chanhvinh.com

45.3.12 Interrupt Enable Register (CE_INT_EN)

CE_INT_EN controls output of the CE_INT-related interrupt signals. If a flag in CE_INT is set to 1 while its corresponding bit in CE_INT_EN is set to 1, an interrupt request is output. For details on interrupt requests, see section 45.4, Interrupt Requests.

Bit:	31	30	29	28	27	26	25	24	23	22	21	20	19	18	17	16
	—	—	—	—	—	MCMD 12DRE	MCMD 12RBE	MCMD 12CRE	MDT RANE	MBUF RE	MBUF WEN	MBUF REN	—	—	MRBSY E	MCRSP E
Initial value:	0	0	0	0	0	0	0	0	0	0	0	0	0	0	0	0
R/W:	R	R	R	R	R	R/W	R/W	R/W	R/W	R/W	R/W	R/W	R	R	R/W	R/W

Bit:	15	14	13	12	11	10	9	8	7	6	5	4	3	2	1	0
	MCMD VIO	MBUF VIO	—	—	MWDAT ERR	MRDAT ERR	MRIDX ERR	MRSP ERR	—	—	—	MCRC STO	MWDA TTO	MRDA TTO	MRBS YTO	MRSP TO
Initial value:	0	0	0	0	0	0	0	0	0	0	0	0	0	0	0	0
R/W:	R/W	R/W	R	R	R/W	R/W	R/W	R/W	R	R	R	R/W	R/W	R/W	R/W	R/W

Bit	Bit Name	Initial Value	R/W	Description
31 to 27	—	All 0	R	Reserved These bits are always read as 0. The write value should always be 0.
26	MCMD12DRE	0	R/W	CMD12DRE Interrupt Enable 0: Disables interrupt output by the CMD12DRE flag 1: Enables interrupt output by the CMD12DRE flag
25	MCMD12RBE	0	R/W	CMD12RBE Interrupt Enable 0: Disables interrupt output by the CMD12RBE flag 1: Enables interrupt output by the CMD12RBE flag
24	MCMD12CRE	0	R/W	CMD12CRE Interrupt Enable 0: Disables interrupt output by the CMD12CRE flag 1: Enables interrupt output by the CMD12CRE flag
23	MDTRANE	0	R/W	DTRANE Interrupt Enable 0: Disables interrupt output by the DTRANE flag 1: Enables interrupt output by the DTRANE flag
22	MBUFRE	0	R/W	BUFRE Interrupt Enable 0: Disables interrupt output by the BUFRE flag 1: Enables interrupt output by the BUFRE flag
21	MBUFWEN	0	R/W	BUFWEN Interrupt Enable 0: Disables interrupt output by the BUFWEN flag 1: Enables interrupt output by the BUFWEN flag

chanhvinh.com

Bit	Bit Name	Initial Value	R/W	Description
20	MBUFREN	0	R/W	BUFREN Interrupt Enable 0: Disables interrupt output by the BUFREN flag 1: Enables interrupt output by the BUFREN flag
19, 18	—	All 0	R	Reserved These bits are always read as 0. The write value should always be 0.
17	MRBSYE	0	R/W	RBSYE Interrupt Enable 0: Disables interrupt output by the RBSYE flag 1: Enables interrupt output by the RBSYE flag
16	MCRSPE	0	R/W	CRSPE Interrupt Enable 0: Disables interrupt output by the CRSPE flag 1: Enables interrupt output by the CRSPE flag
15	MCMDVIO	0	R/W	CMDVIO Interrupt Enable 0: Disables interrupt output by the CMDVIO flag 1: Enables interrupt output by the CMDVIO flag
14	MBUFVIO	0	R/W	BUFVIO Interrupt Enable 0: Disables interrupt output by the BUFVIO flag 1: Enables interrupt output by the BUFVIO flag
13, 12	—	00	R	Reserved These bits are always read as 0. The write value should always be 0.
11	MWDATERR	0	R/W	WDATERR Interrupt Enable 0: Disables interrupt output by the WDATERR flag 1: Enables interrupt output by the WDATERR flag
10	MRDATERR	0	R/W	RDATERR Interrupt Enable 0: Disables interrupt output by the RDATERR flag 1: Enables interrupt output by the RDATERR flag
9	MRIDXERR	0	R/W	RIDXERR Interrupt Enable 0: Disables interrupt output by the RIDXERR flag 1: Enables interrupt output by the RIDXERR flag
8	MRSPERR	0	R/W	RSPERR Interrupt Enable 0: Disables interrupt output by the RSPERR flag 1: Enables interrupt output by the RSPERR flag

chanhvinh.com

Bit	Bit Name	Initial Value	R/W	Description
7 to 5	—	All 0	R	Reserved These bits are always read as 0. The write value should always be 0.
4	MCRCSTO	0	R/W	CRCSTO Interrupt Enable 0: Disables interrupt output by the CRCSTO flag 1: Enables interrupt output by the CRCSTO flag
3	MWDATTO	0	R/W	WDATTO Interrupt Enable 0: Disables interrupt output by the WDATTO flag 1: Enables interrupt output by the WDATTO flag
2	MRDATTO	0	R/W	RDATTO Interrupt Enable 0: Disables interrupt output by the RDATTO flag 1: Enables interrupt output by the RDATTO flag
1	MRBSYTO	0	R/W	RBSYTO Interrupt Enable 0: Disables interrupt output by the RBSYTO flag 1: Enables interrupt output by the RBSYTO flag
0	MRSPTO	0	R/W	RSPTO Interrupt Enable 0: Disables interrupt output by the RSPTO flag 1: Enables interrupt output by the RSPTO flag

chanhvinh.com

45.3.13 Status Register 1 (CE_HOST _STS1)

CE_HOST STS1 indicates the number of blocks that have been transferred, states of the MMC_CMD and MMC_D lines, index of the received response, and command sequence status.

Bit:	31	30	29	28	27	26	25	24	23	22	21	20	19	18	17	16
	CMD SEQ	CMD SIG	RSPIDX[5:0]						DATSIG[7:0]							
Initial value:	0	—	0	0	0	0	0	0	—	—	—	—	—	—	—	—
R/W:	R	R	R	R	R	R	R	R	R	R	R	R	R	R	R	R

Bit:	15	14	13	12	11	10	9	8	7	6	5	4	3	2	1	0
	RCVBLK[15:0]															
Initial value:	0	0	0	0	0	0	0	0	0	0	0	0	0	0	0	0
R/W:	R	R	R	R	R	R	R	R	R	R	R	R	R	R	R	R

Bit	Bit Name	Initial Value	R/W	Description
31	CMDSEQ	0	R	Command Sequence Status 0: Command sequence is in the initial state 1: Command sequence is being executed
30	CMDSIG	Undefined	R	MMC_CMD Line Status Indicates the state on the command line.
29 to 24	RSPIDX [5:0]	H'00	R	Response Index Indicate [45:40] of a 6-byte response or [133:128] of a 17-byte response.
23 to 16	DATSIG [7:0]	Undefined	R	MMC_D Status Indicate the states on the MMC_D[7:0] lines. Note: When a communication error or a timeout error occurs, MMC_D[0] may remain 0.
15 to 0	RCVBLK [15:0]	H'0000	R	Number of Transferred Blocks Indicate the number blocks that have been transferred. • When the DWEN bit in CE_CMD_SET is 0 Number of blocks read from the card • When the DWEN bit in CE_CMD_SET is 1 Number of blocks written to the card

chanhvinh.com

45.3.14 Status Register 2 (CE_HOST _STS2)

CE_HOST _STS2 indicates timeout and error statuses.

Bit:	31	30	29	28	27	26	25	24	23	22	21	20	19	18	17	16
	CRC STE	CRC 16E	AC12 CRCE	RSP CRC7E	CRC STEBE	RDAT EBE	AC12R EBE	RSP EBE	AC12 IDXE	RSP IDXE	—	—	—	CRCST[2:0]		
Initial value:	0	0	0	0	0	0	0	0	0	0	0	0	0	0	0	0
R/W:	R	R	R	R	R	R	R	R	R	R	R	R	R	R	R	R

Bit:	15	14	13	12	11	10	9	8	7	6	5	4	3	2	1	0
	—	STRD ATTO	DATBS YTO	CRCST TO	AC12 BSYTO	RSPBS YTO	AC12 RSPTO	STRS PTO	—	—	—	—	—	—	—	—
Initial value:	0	0	0	0	0	0	0	0	0	0	0	0	0	0	0	0
R/W:	R	R	R	R	R	R	R	R	R	R	R	R	R	R	R	R

Bit	Bit Name	Initial Value	R/W	Description
31	CRCSTE	0	R	CRC Status Error This bit is set to 1 when an error is found in the CRC status value.
30	CRC16E	0	R	Read Data CRC16 Error This bit is set to 1 when an error is found in CRC16 in the read data.
29	AC12CRCE	0	R	Automatic CMD12 Response CRC7 Error This bit is set to 1 when an error is found in [7:1] of the response to the automatically-issued CMD12. Note: The items to be checked are set by RCRC7C in CE_CMD_SET.
28	RSPCRC7E	0	R	Command Response CRC7 Error (other than automatically-issued CMD12) This bit is set to 1 when an error is found in [7:1] of a 6-byte response or a 17-byte response. Note: The items to be checked are set by RCRC7C in CE_CMD_SET.
27	CRCSTEBE	0	R	CRC Status End Bit Error This bit is set to 1 when an error is found in the end bits in CRC status.
26	RDATEBE	0	R	Read Data End Bit Error This bit is set to 1 when an error is found in the end bits in the read data.
25	AC12REBE	0	R	Automatic CMD12 Response End Bit Error This bit is set to 1 when an error is found in the end bits of the response to the automatically-issued CMD12.

chanhvinh.com

Bit	Bit Name	Initial Value	R/W	Description
24	RSPEBE	0	R	Command Response End Bit Error (other than automatically-issued CMD12) This bit is set to 1 when an error is found in the end bits of the response.
23	AC12IDXE	0	R	Automatic CMD12 Response Index Error This bit is set to 1 when an error is found in [45:40] of the response to the automatically-issued CMD12. Note: The items to be checked are set by RIDXC in CE_CMD_SET.
22	RSPIDXE	0	R	Command Response Index Error This bit is set to 1 when an error is found in [45:40] of a 6-byte response or [133:128] of a 17-byte response. Note: The items to be checked are set by RIDXC in CE_CMD_SET.
21 to 19	—	All 0	R	Reserved These bits are always read as 0. The write value should always be 0.
18 to 16	CRCST [2:0]	000	R	CRC Status Indicate the value of the CRC status that has been received.
15	—	0	R	Reserved This bit is always read as 0. The write value should always be 0.
14	STRDATTO	0	R	Read Data Timeout • This bit is set to 1 if read data is not received within the period set by the SRWDTO bits in CE_CLK_CTRL after a read command was transmitted. • This bit is set to 1 if read data is not received within the period set by the SRWDTO bits in CE_CLK_CTRL after a read data was received.
13	DATBSYTO	0	R	Data Busy Timeout This bit is set to 1 if busy status remains unchanged after the period set by the SRWDTO bits in CE_CLK_CTRL after the CRC status was received.
12	CRCSTTO	0	R	CRC Status Timeout This bit is set to 1 if CRC status could not be received.

chanhvinh.com

Bit	Bit Name	Initial Value	R/W	Description
11	AC12BSYTO	0	R	Automatic CMD12 Response Busy Timeout This bit is set to 1 if busy state remains unchanged after the period set by the SRBSYTO bits in CE_CLK_CTRL after the automatically-issued CMD12 was transmitted.
10	RSPBSYTO	0	R	Response Busy Timeout This bit is set to 1 if busy state remains unchanged after the period set by the SRBSYTO bits in CE_CLK_CTRL after a command (other than automatically-issued CMD12) was transmitted.
9	AC12RSPTO	0	R	Automatic CMD12 Response Timeout This bit is set to 1 if the response is not received within the period set by the SRSPTO bits in CE_CLK_CTRL after the automatically-issued CMD12 was transmitted.
8	STRSPTO	0	R	Response Timeout This bit is set to 1 if the response is not received within the period set by the SRSPTO bits in CE_CLK_CTRL after a command (other than automatically-issued CMD12) was transmitted.
7 to 0	—	All 0	R	Reserved These bits are always read as 0. The write value should always be 0.

chanhvinh.com

45.3.15 DMA Mode Setting Register (CE_DMA_MODE)

CE_DMA_MODE sets the transfer unit for DMA transfer.

Bit:	31	30	29	28	27	26	25	24	23	22	21	20	19	18	17	16
	—	—	—	—	—	—	—	—	—	—	—	—	—	—	—	—
Initial value:	0	0	0	0	0	0	0	0	0	0	0	0	0	0	0	0
R/W:	R	R	R	R	R	R	R	R	R	R	R	R	R	R	R	R

Bit:	15	14	13	12	11	10	9	8	7	6	5	4	3	2	1	0
	—	—	—	—	—	—	—	—	—	—	—	—	—	—	—	DMA SEL
Initial value:	0	0	0	0	0	0	0	0	0	0	0	0	0	0	0	0
R/W:	R	R	R	R	R	R	R	R	R	R	R	R	R	R	R	R/W

Bit	Bit Name	Initial Value	R/W	Description
31 to 1	—	All 0	R	Reserved These bits are always read as 0. The write value should always be 0.
0	DMASEL	0	R/W	DMA Transfer Size Select Selects the transfer unit for CE_DATA read/write DMA transfer. Set this bit in combination with the transfer size (TS[1:0]) set in the DMA channel control register. 0: 2-byte (word) or 4-byte (longword) unit 1: 16-byte (longword × 4) unit Note: When a transfer error or timeout occurs during DMA transfer in 16-byte units, leading to the forced termination of transfer, write 0 to this bit and then set it to 1 again. Also do this whenever a software reset is used.

chanhvinh.com

45.3.16 Card Detection/Port Control Register (CE_DETECT)

CE_DETECT controls the card detection. For details on interrupt requests by the card detection, see section 45.4, Interrupt Requests.

Bit:	31	30	29	28	27	26	25	24	23	22	21	20	19	18	17	16
	—	—	—	—	—	—	—	—	—	—	—	—	—	—	—	—
Initial value:	0	0	0	0	0	0	0	0	0	0	0	0	0	0	0	0
R/W:	R	R	R	R	R	R	R	R	R	R	R	R	R	R	R	R

Bit:	15	14	13	12	11	10	9	8	7	6	5	4	3	2	1	0
	—	CD SIG	CD RISE	CD FALL	—	—	—	—	—	—	MCD RISE	MCD FALL	—	—	—	—
Initial value:	0	—	0	0	0	—	0	0	0	0	0	0	0	0	0	0
R/W:	R	R	R/W*	R/W*	R	R	R	R	R	R	R/W	R/W	R	R	R	R

Bit	Bit Name	Initial Value	R/W	Description
31 to 15	—	All 0	R	Reserved These bits are always read as 0. The write value should always be 0.
14	CDSIG	Undefined	R	MMC_CD Pin Status Indication Indicates the MMC_CD pin status.
13	CDRISE	0	R/W*	MMC_CD Pin Rise Detection Flag [Setting condition] The MMC_CD pin level changes from low to high. [Clearing condition] 0 is written to.
12	CDFALL	0	R/W*	MMC_CD Pin Fall Detection Flag [Setting condition] The MMC_CD pin level changes from high to low. [Clearing condition] 0 is written to.
11	—	0	R	Reserved This bit is always read as 0. The write value should always be 0.
10	—	Undefined	R	Reserved The write value should always be 0.
9 to 6	—	All 0	R	Reserved These bits are always read as 0. The write value should always be 0.

chanhvinh.com

Bit	Bit Name	Initial Value	R/W	Description
5	MCDRISE	0	R/W	CDRISE Interrupt Enable 0: Disables interrupt output by the CDRISE flag. 1: Enables interrupt output by the CDRISE flag.
4	MCDFALL	0	R/W	CDFALL Interrupt Enable 0: Disables interrupt output by the CDFALL flag. 1: Enables interrupt output by the CDFALL flag.
3 to 0	—	All 0	R	Reserved These bits are always read as 0. The write value should always be 0.

Note: * A 0 is the only value that can be written to these bits. Writing a 1 is ignored.

chanhvinh.com

45.3.17 Special Mode Setting Register (CE_ADD_MODE)

CE_ADD_MODE controls the internal clock.

Bit:	31	30	29	28	27	26	25	24	23	22	21	20	19	18	17	16
	—	—	—	—	—	—	—	—	—	—	—	—	CLK MAIN	—	—	—
Initial value:	0	0	0	0	0	0	0	0	0	0	0	0	0	0	0	0
R/W:	R	R	R	R	R	R	R	R	R	R	R	R	R/W	R	R	R

Bit:	15	14	13	12	11	10	9	8	7	6	5	4	3	2	1	0
	—	—	—	—	—	—	—	—	—	—	—	—	—	—	—	—
Initial value:	0	0	0	0	0	0	0	0	0	0	0	0	0	0	0	0
R/W:	R	R	R	R	R	R	R	R	R	R	R	R	R	R	R	R

Bit	Bit Name	Initial Value	R/W	Description
31 to 20	—	All 0	R	Reserved These bits are always read as 0. The write value should always be 0.
19	CLKMAIN	0	R/W	Internal Clock Control 0: Normal mode 1: Low power consumption mode (only the card detection is enabled)
18 to 0	—	All 0	R	Reserved These bits are always read as 0. The write value should always be 0.

chanhvinh.com

45.3.18 Version Register (CE_VERSION)

CE_VERSION indicates the version number and controls software reset of this module.

Bit:	31	30	29	28	27	26	25	24	23	22	21	20	19	18	17	16
	SW RST	—	—	—	—	—	—	—	—	—	—	—	—	—	—	—
Initial value:	0	0	0	0	0	0	0	0	0	0	0	0	0	0	0	0
R/W:	R/W	R	R	R	R	R	R	R	R	R	R	R	R	R	R	R

Bit:	15	14	13	12	11	10	9	8	7	6	5	4	3	2	1	0
	VERSION[15:0]															
Initial value:	0	0	0	0	0	0	0	0	0	0	0	0	0	0	1	1
R/W:	R	R	R	R	R	R	R	R	R	R	R	R	R	R	R	R

Bit	Bit Name	Initial Value	R/W	Description
31	SWRST	0	R/W	Software Reset 0: Software reset cleared (normal operation) 1: Executes software reset. When SWRST is set to 1, all the register values are reset to the initial values. (SWRST is not reset to the initial value)
30 to 16	—	All 0	R	Reserved These bits are always read as 0. The write value should always be 0.
15 to 0	VERSION [15:0]	H'0003	R	Version Information Indicates the version number of this module.

chanhvinh.com

45.4 Interrupt Requests

Table 45.3 shows the interrupt request specifications of this module.

This module generates three types of interrupt requests: normal operation, error/timeout, and card detection. When an interrupt flag is set to 1and also the corresponding interrupt is enabled, an interrupt request is asserted.

Table 45.3 Specifications of Interrupt Requests

Flag Register	Bit	Mask Register	Bit	Interrupt Request
CE_INT	CMD12DRE	CE_INT_EN	MCMD12DRE	Normal operation interrupt (MMC2)
	CMD12RBE		MCMD12RBE	
	CMD12CRE		MCMD12CRE	
	DTRANE		MDTRANE	
	BUFRE		MBUFRE	
	BUFWEN		MBUFWEN	
	BUFREN		MBUFREN	
	RBSYE		MRBSYE	
	CRSPE		MCRSPE	
	CMDVIO		MCMDVIO	Error/timeout interrupt (MMC1)
	BUFVIO		MBUFVIO	
	WDATERR		MWDATERR	
	RDATERR		MRDATERR	
	RIDXERR		MRIDXERR	
	RSPERR		MRSPERR	
	CRCSTO		MCRCSTO	
	WDATTO		MWDATTO	
	RDATTO		MRDATTO	
	RBSYTO		MRBSYTO	
	RSPTO		MRSPTO	
CE_DETECT	CDRISE	CE_DETECT	MCDRISE	Card detection interrupt (MMC0)
	CEFALL		MCDFALL	

chanhvinh.com

45.5 DMA Specifications

This module provides two channels for DMA transfer requests: one for buffer reading and the other for buffer writing.

45.5.1 DMA for Buffer Writing

The DMA transfer request is asserted for buffer writing when the buffer has become empty while the DMAWEN bit in CE_BUF_ACC is set to 1.

The DMA transfer request stays asserted for the amount of data specified by BLKSIZ (the block size set in CE_BLOCK_SET) × BLKCNT (the number of blocks for transfer set in CE_BLOCK_SET), and negated after the last block has been transferred. Note that the BUFWEN bit in CE_INT will not be asserted during DMA transfer.

If an error has occurred during DMA transfer or DMA transfer is forcibly terminated, the command sequence is stopped automatically, which causes the DMA transfer request to be negated.

45.5.2 DMA for Buffer Reading

The DMA transfer request is asserted for buffer reading when the buffer stores data of the block size specified in CE_BLOCK_SET while the DMAREN bit in CE_BUF_ACC is set to 1.

The DMA transfer request stays asserted for the amount of data specified by BLKSIZ (the block size set in CE_BLOCK_SET) × BLKCNT (the number of blocks for transfer set in CE_BLOCK_SET), and negated after the last block has been transferred. Note that the BUFREN bit in CE_INT will not be asserted during DMA transfer.

If an error has occurred during DMA transfer or DMA transfer is forcibly terminated, the command sequence is stopped automatically, which causes the DMA transfer request to be negated.

chanhvinh.com

45.6 Operation

45.6.1 Command/Response Formats

Figure 45.2 shows the format of the command to be transferred. The command index that is set in CMD[5:0] of CE_CMD_SET and the argument set in ARG[31:0] of CE_ARG are reflected in the command.

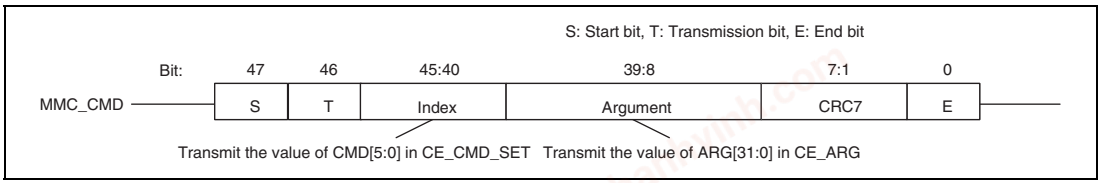

Figure 45.2 Command Format

Figures 45.3 and 45.4 show the formats when a 6-byte response and 17-byte response are received, respectively. The response index is stored in RSPIDX[5:0] of CE_HOST_STS1, and the status value of the response is stored to CE_RESP0 or CE_RESP3 to CE_RESP0.

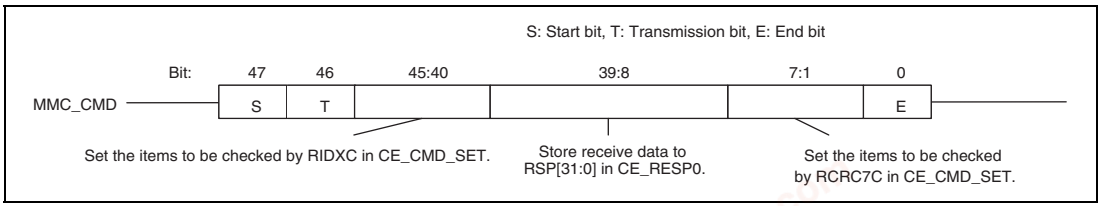

Figure 45.3 Format of 6-Byte Response



Figure 45.4 Format of 17-Byte Response (R2)

chanhvinh.com

45.6.2 Data Block Format

Figure 45.5 shows the format of data. For details on D0 to D3 in figure 45.5, see section 45.6.3, Buffer Structure and Buffer Accesses. When data is written to a card, data stored in the buffer is transmitted. When data is read from a card, receive data is stored to the buffer.

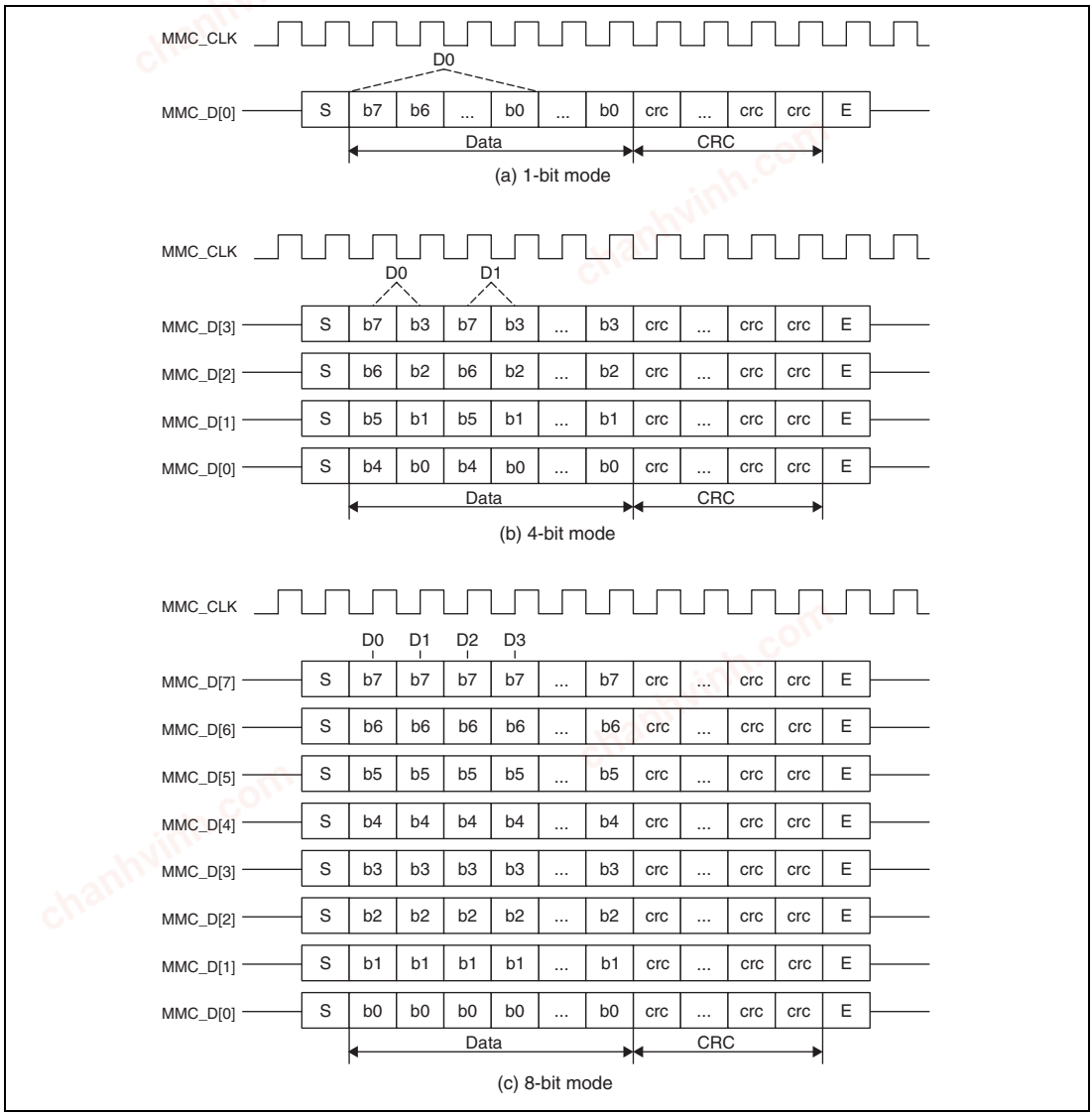

Figure 45.5 Data Block Format

chanhvinh.com

45.6.3 Buffer Structure and Buffer Accesses

This module has two units of 512-byte RAM as shown in figure 45.6. Therefore, for multi-block writing, if one block of data (512 bytes) stored in one buffer has been transmitted but the other buffer is full, the next block of data can be continuously transmitted. For multi-block reading, if one block of receive data has been stored in one buffer but the other buffer is empty, the next block of receive data can be continuously stored in the buffer.

If neither of the buffers is empty for multi-block reading, the MMC clock is stopped and reception is suspended. When one of the buffers becomes empty, the MMC clock supply is started to start reception.

The buffer is accessed with CE_DATA. If the transfer block size is set to 4 × n + 1 or 4 × n + 3, CE_DATA should be accessed for 4 × n + 2 bytes or 4 × (n + 1) bytes in 16-bit access, and for 4 × (n + 1) bytes in 32-bit access. (n = 0, 1, 2, …, 127)

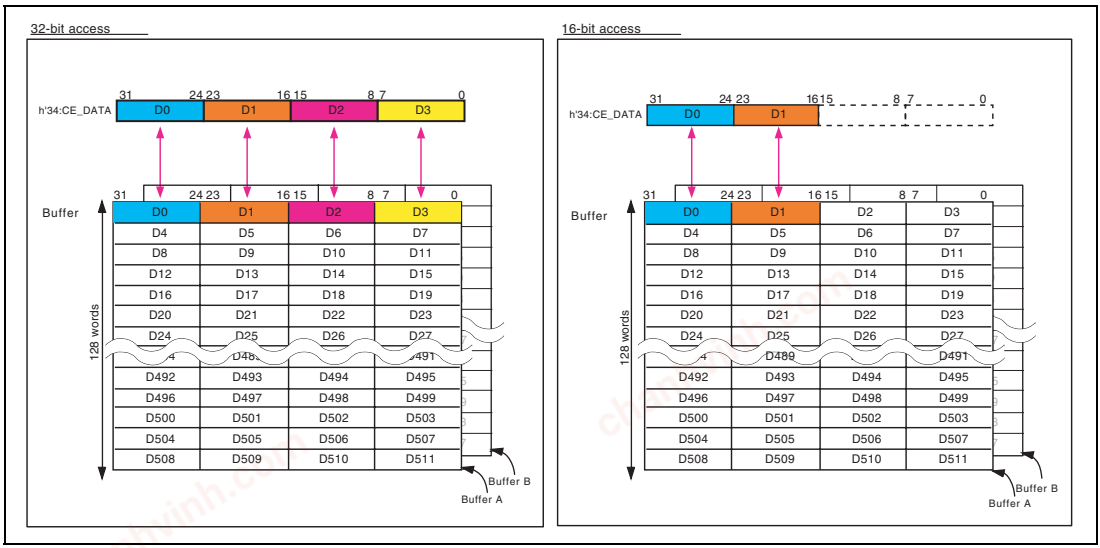

Figure 45.6 Double Buffer Structure

chanhvinh.com

The buffer access select function allows byte-wise swapping of data when the buffer is accessed by writing to or reading from CE_DATA. This function is enabled by the setting of CE_BUFF_ACC. Figure 45.7 shows the specification of 32-bit and 16-bit accesses.

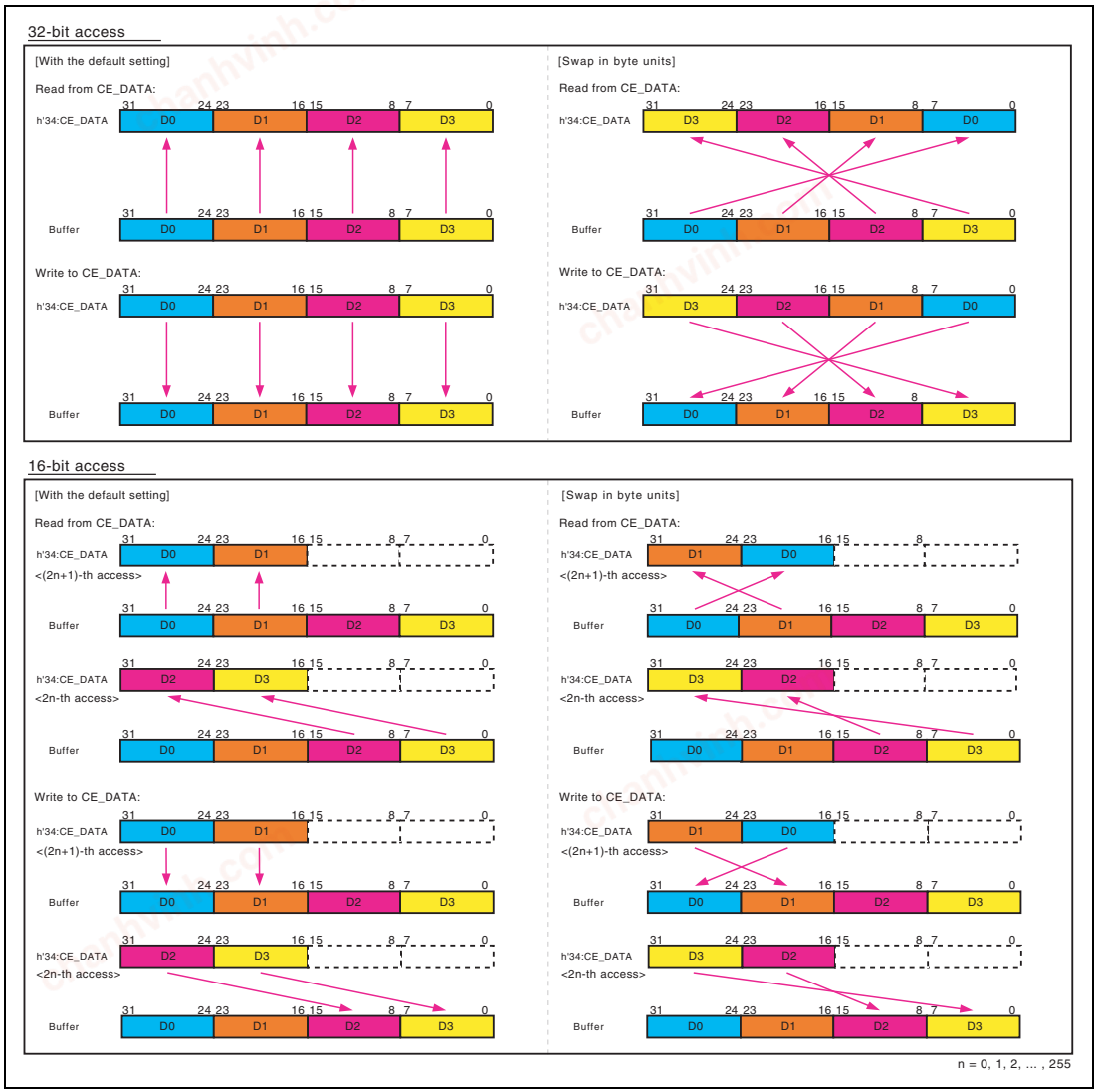

Figure 45.7 Specification of Byte-Swapping in 32/16-Bit Accesses (n = 1, 2, 3 … 255)

chanhvinh.com

45.6.4 Automatic CMD12 Issuance

This module automatically issues CMD12 when multi-block transfer is performed with the CMD12EN in CE_CMD_SET to 1.

Figure 45.8 shows the timing of automatic CMD12 issuance in multi-block read. CMD12 is issued such that the end bit of the command is sent two bits before the end bit of the data during reception of the last block.

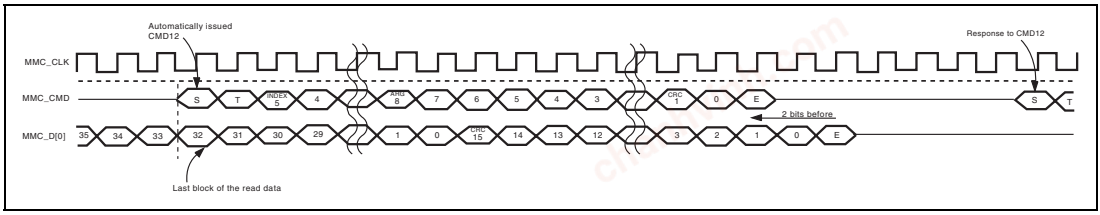

Figure 45.8 Timing of Automatically-Issued CMD12 in Multi-Block Read (1-Bit Mode)

Figure 45.9 shows the timing of automatic CMD12 issuance in multi-block write. CMD12 is issued after the data busy after transmission of the last block has ended.

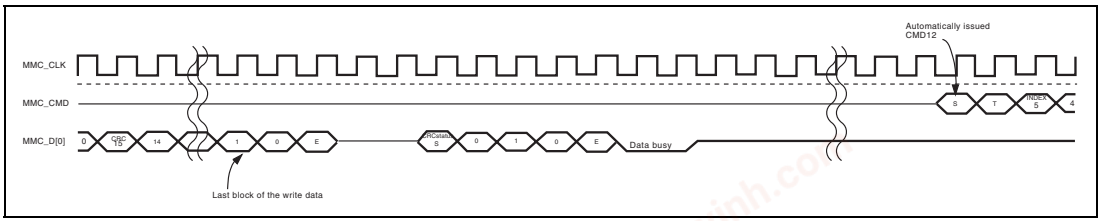

Figure 45.9 Timing of Automatically-Issued CMD12 in Multi-Block Write (1-Bit Mode)

The argument of the automatically-issued CMD12 is set by CE_ARG_CMD12. The value of [39:8] of the response to CMD12 is stored to CE_RESP_CMD12. The busy status on response reception is received.

chanhvinh.com

45.6.5 Operation in the Case of Error/Timeout

This module may not be stopped in case of error occurrence. If the command sequence is in progress when an error occurs (check the CMDSEQ bit in CE_HOST_STS1), terminate the sequence forcibly and perform a software reset. The data for transmission or received data that had been stored in the buffers at the time of error occurrence are not guaranteed.

This module is not stopped when a timeout has occurred. To execute the next command after a timeout error has occurred, terminate the sequence forcibly, perform a software reset.

For forcible termination, refer to section 45.7.11, Forcible Termination.

chanhvinh.com

45.7 Examples of Setting

This section shows the procedures for executing typical command sequences.

45.7.1 Legends

Figure 45.10 shows the legends for the symbols used in the figures in the following subsections.

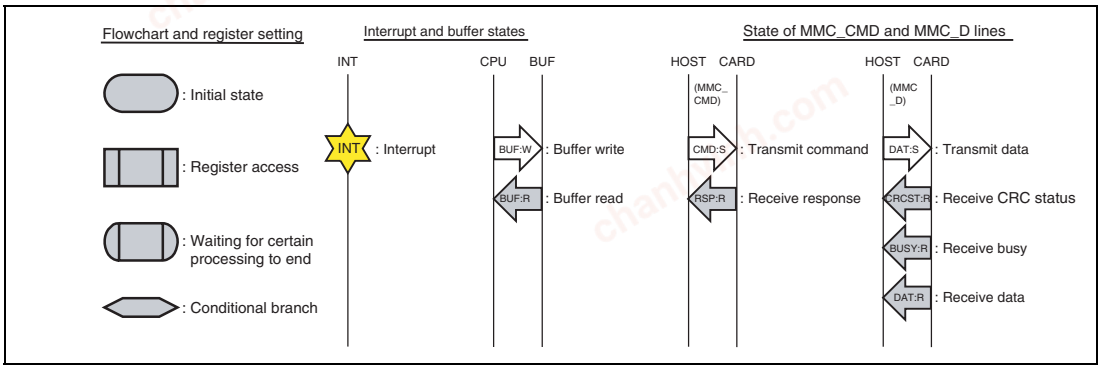

Figure 45.10 Legends for the Symbols Used in the Figures

chanhvinh.com

45.7.2 Command Transmission

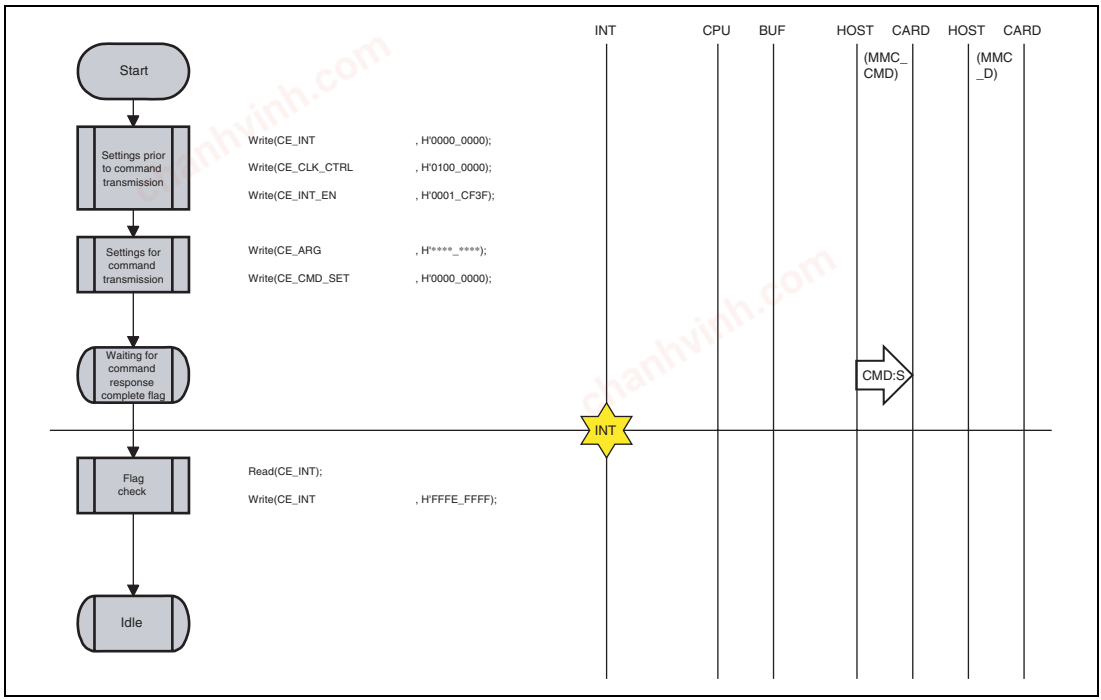

Figure 45.11 Command Transmission (CMD0)

chanhvinh.com

45.7.3 Command Transmission → Response Reception

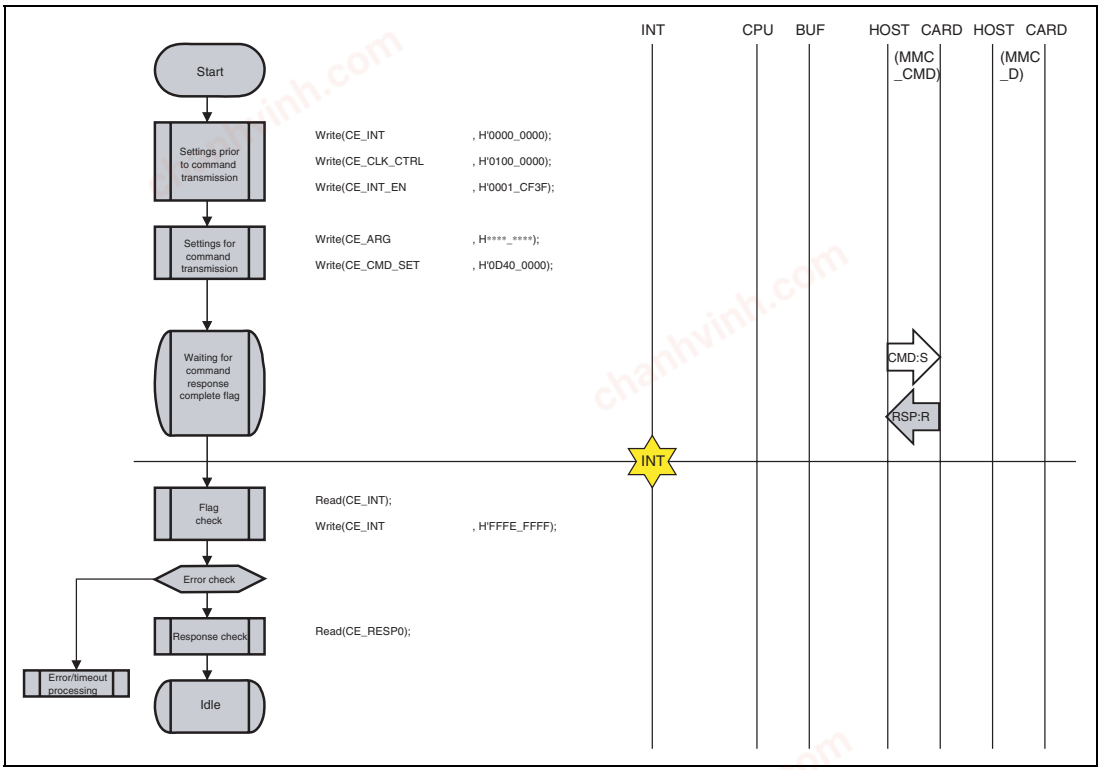

Figure 45.12 Command Transmission → Response Reception (CMD3)

chanhvinh.com

45.7.4 Command Transmission → Response Reception (with Response Busy)

(1) When the busy time period is less than the period set by SRBSYTO in CE_CLK_CTRL

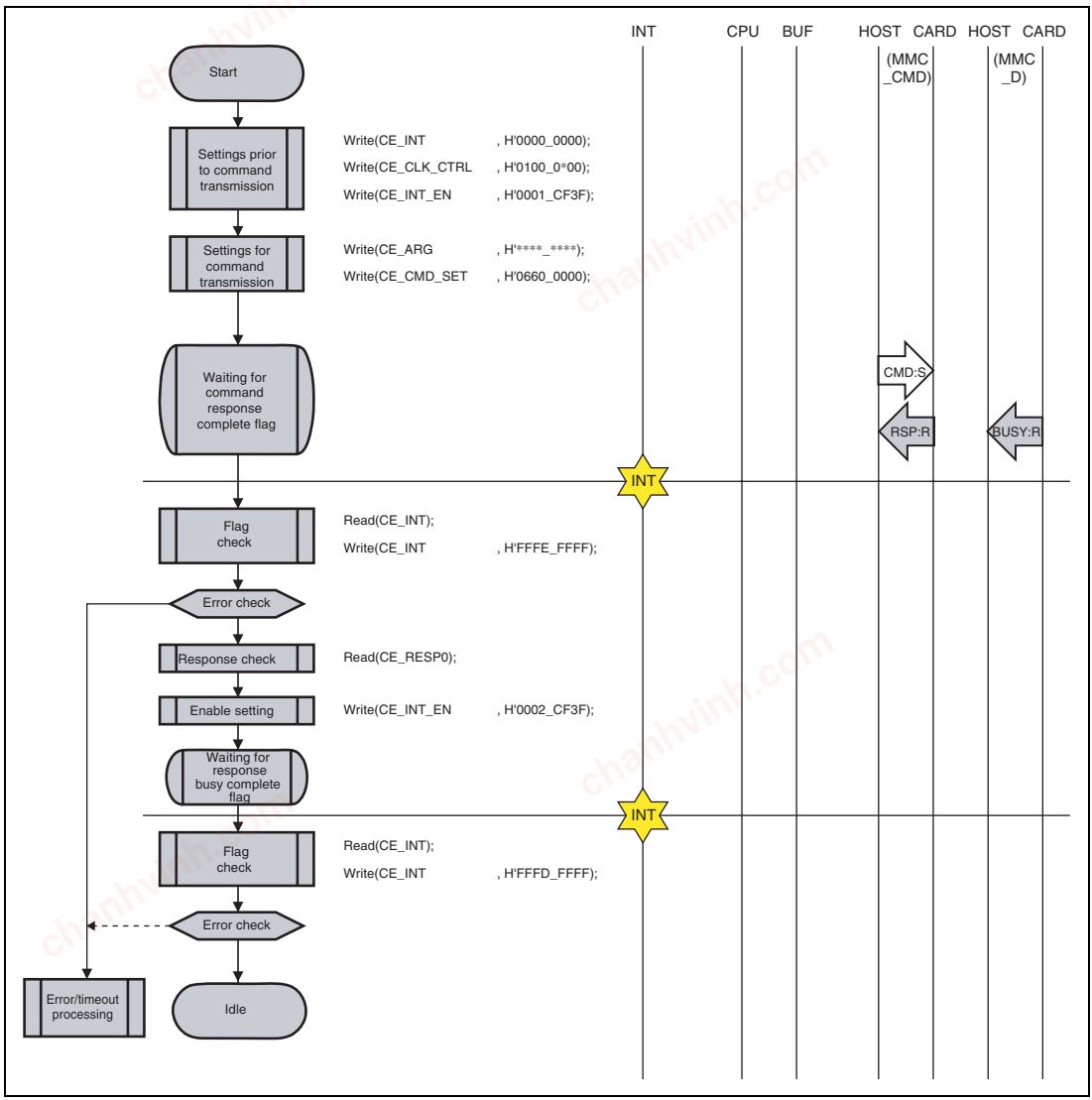

Figure 45.13 Command Transmission → Response Reception (with Response Busy) (CMD6)

chanhvinh.com

(2) When the busy time period may be equal to or beyond the period set by SRBSYTO in CE_CLK_CTRL

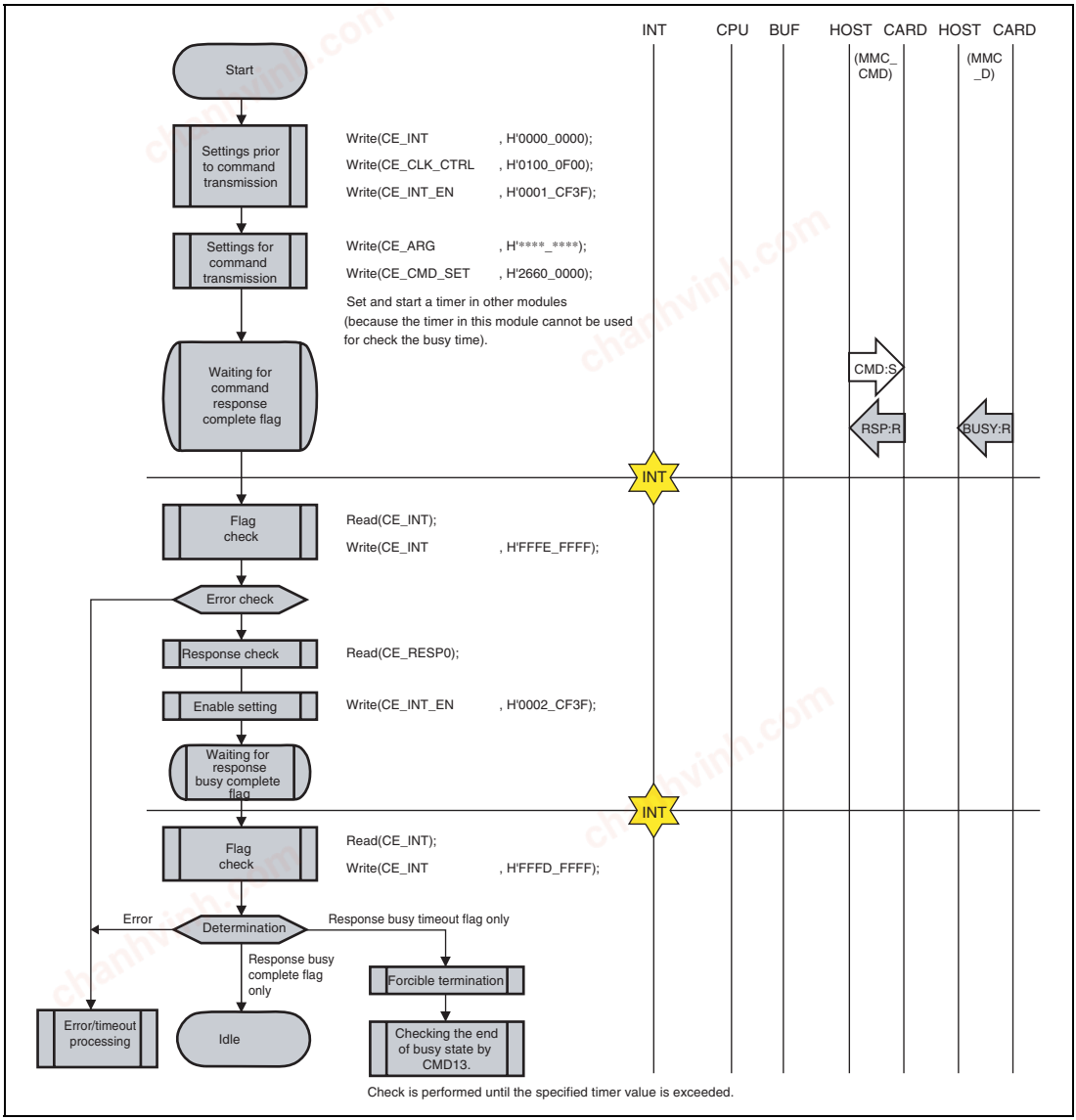

Figure 45.14 Command Transmission → Response Reception (with Response Busy) (CMD38)

chanhvinh.com

45.7.5 Single-Block Read

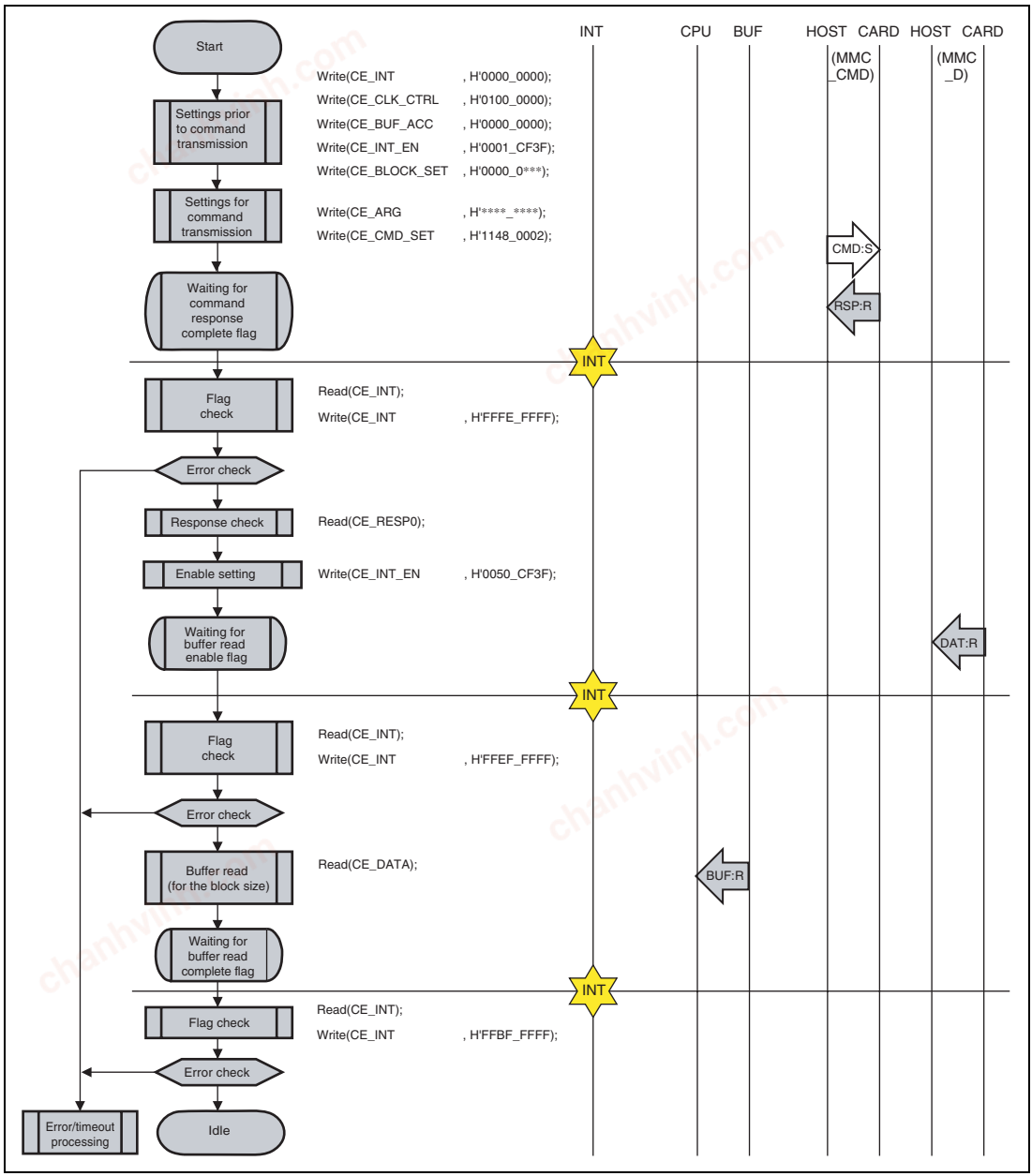

Figure 45.15 Single-Block Read (CMD17)

chanhvinh.com

45.7.6 Multi-Block Read

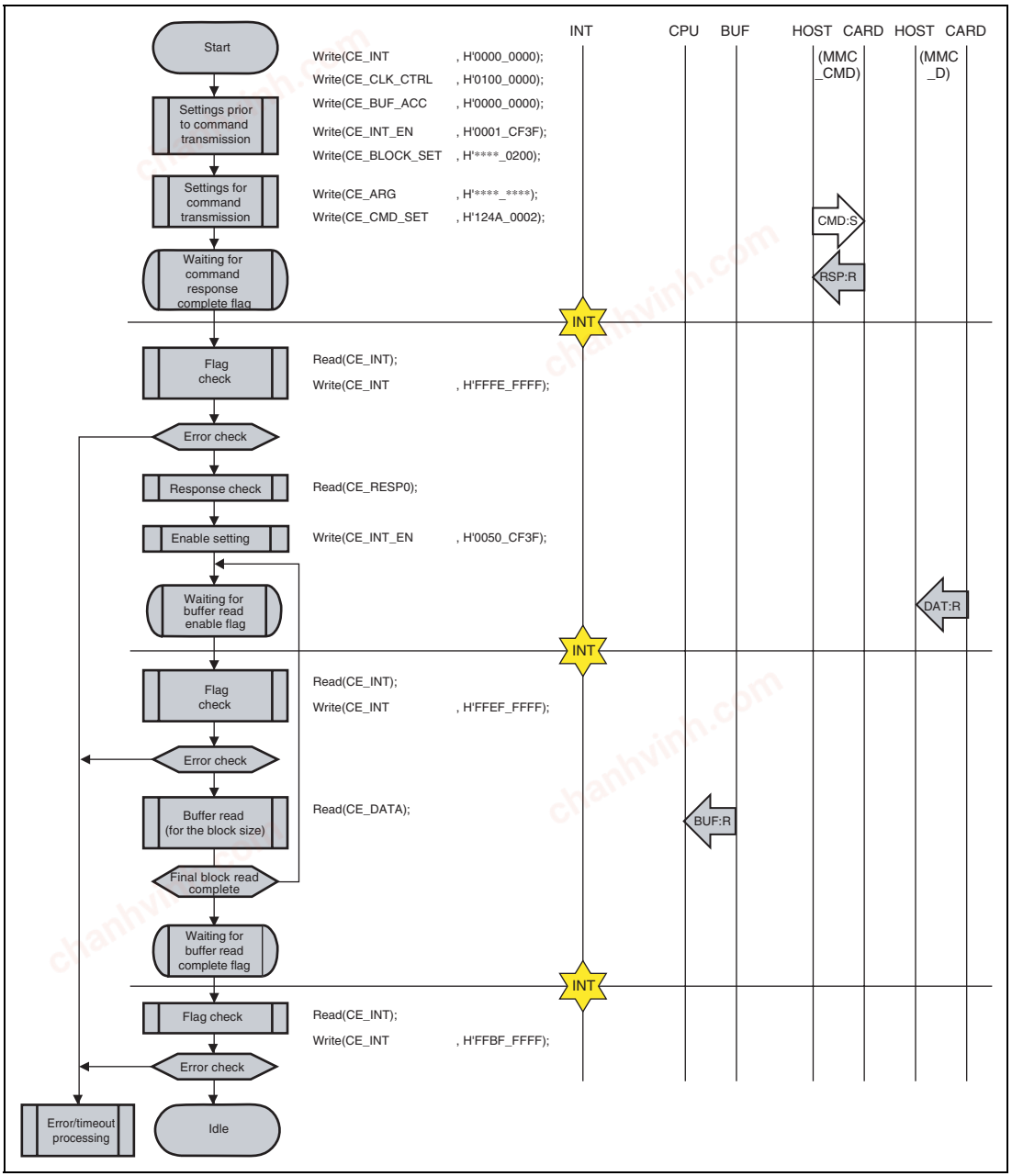

Figure 45.16 Multi-Block Read (CMD18 Pre-Defined)

chanhvinh.com

45.7.7 Multi-Block Read (with Automatic CMD12 Issuance)

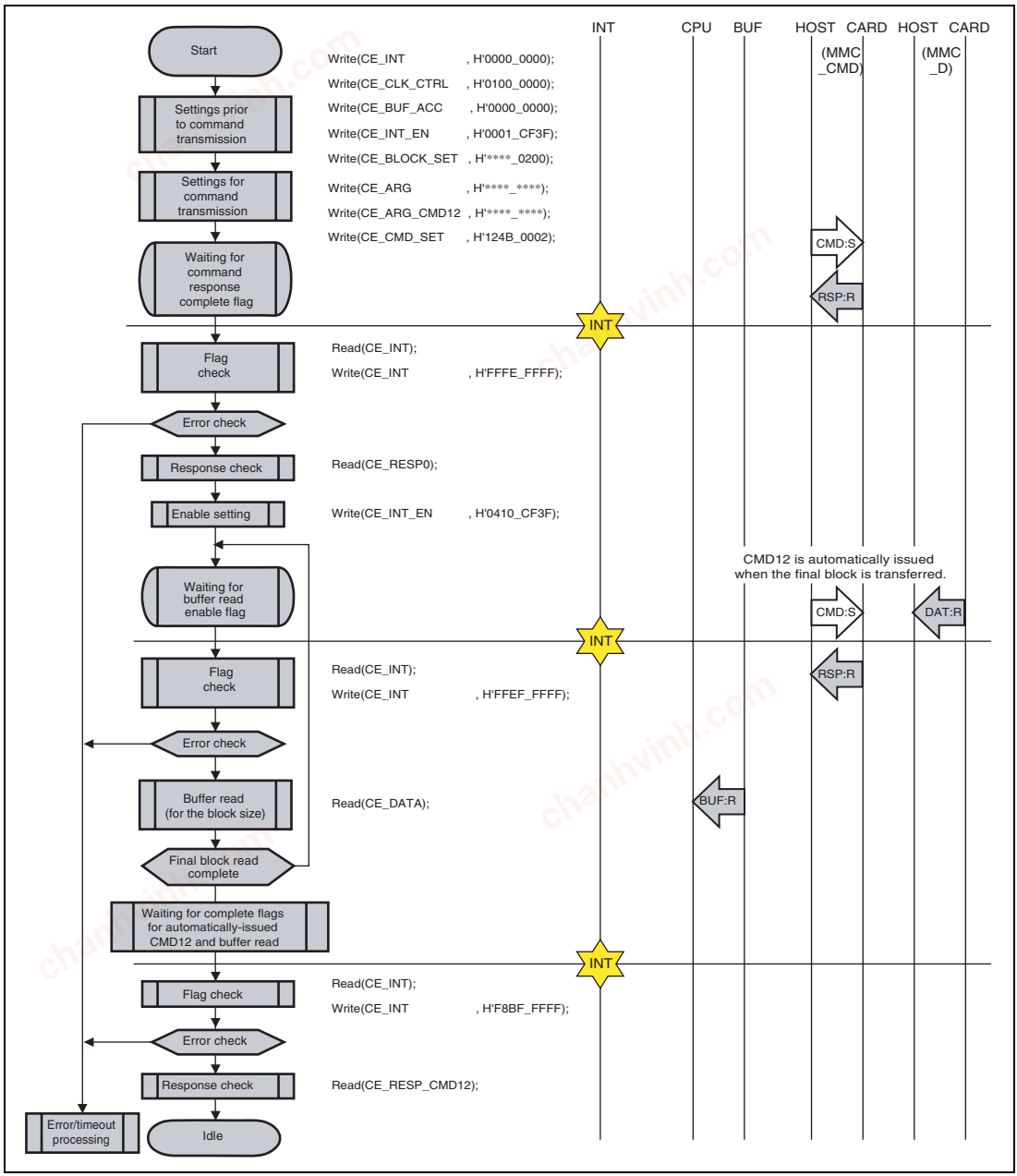

Figure 45.17 Multi-Block Read (with Automatic CMD12 Issuance) (CMD18 Open-Ended)

chanhvinh.com

45.7.8 Single-Block Write

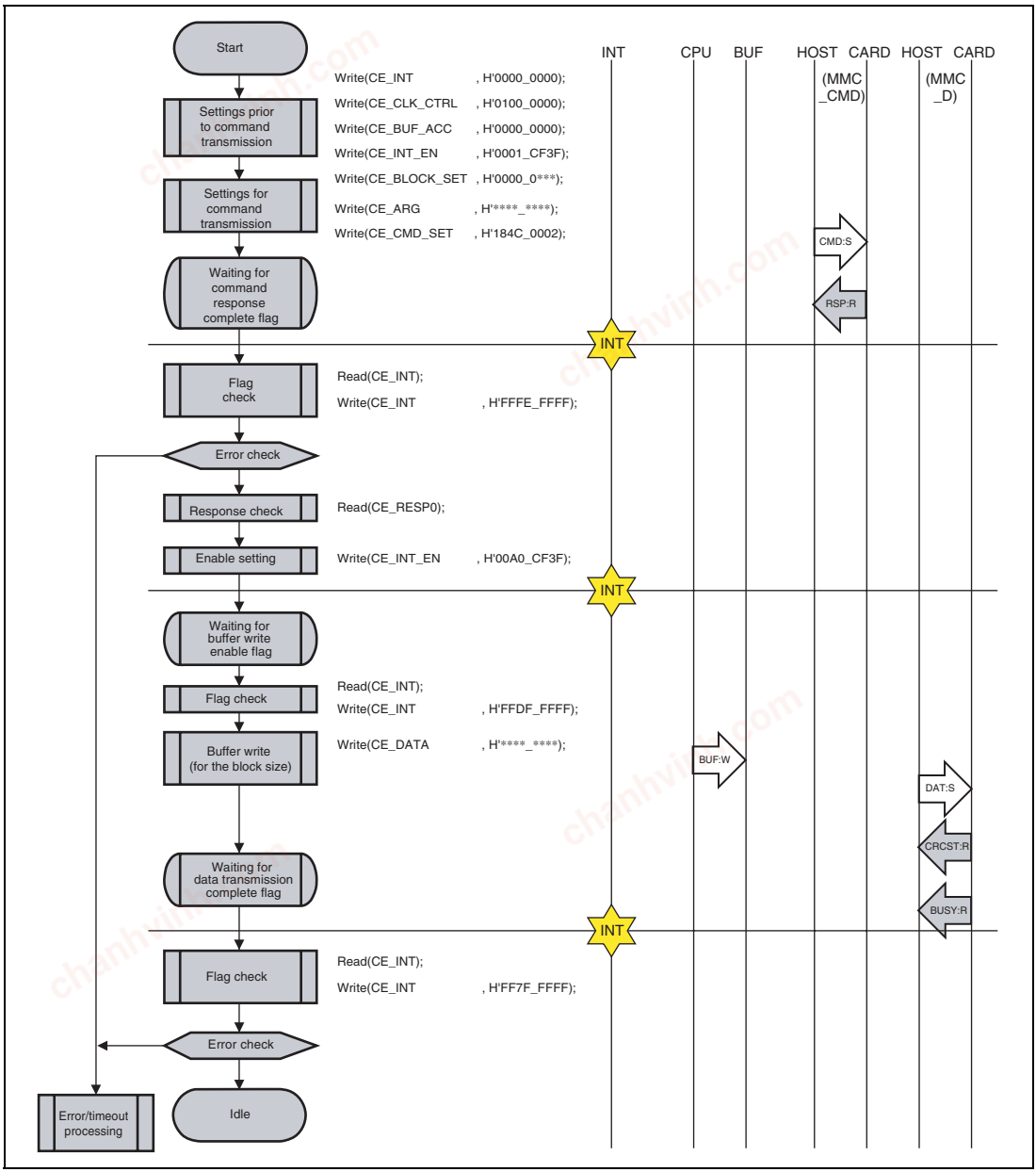

Figure 45.18 Single-Block Write (CMD24)

chanhvinh.com

45.7.9 Multi-Block Write

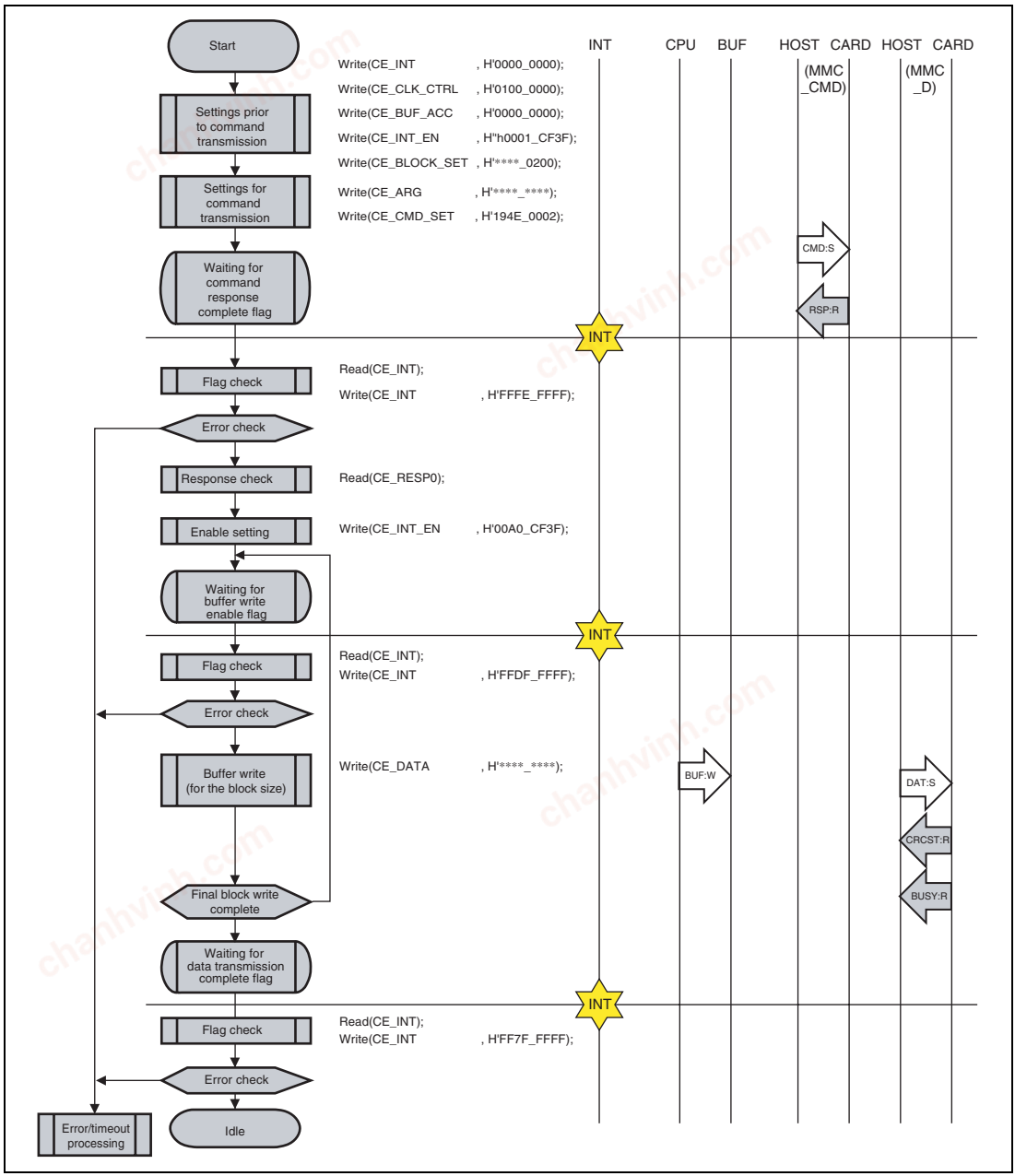

Figure 45.19 Multi-Block Write (CMD25 Pre-Defined)

chanhvinh.com

45.7.10 Multi-Block Write (with Automatic CMD12 Issuance)

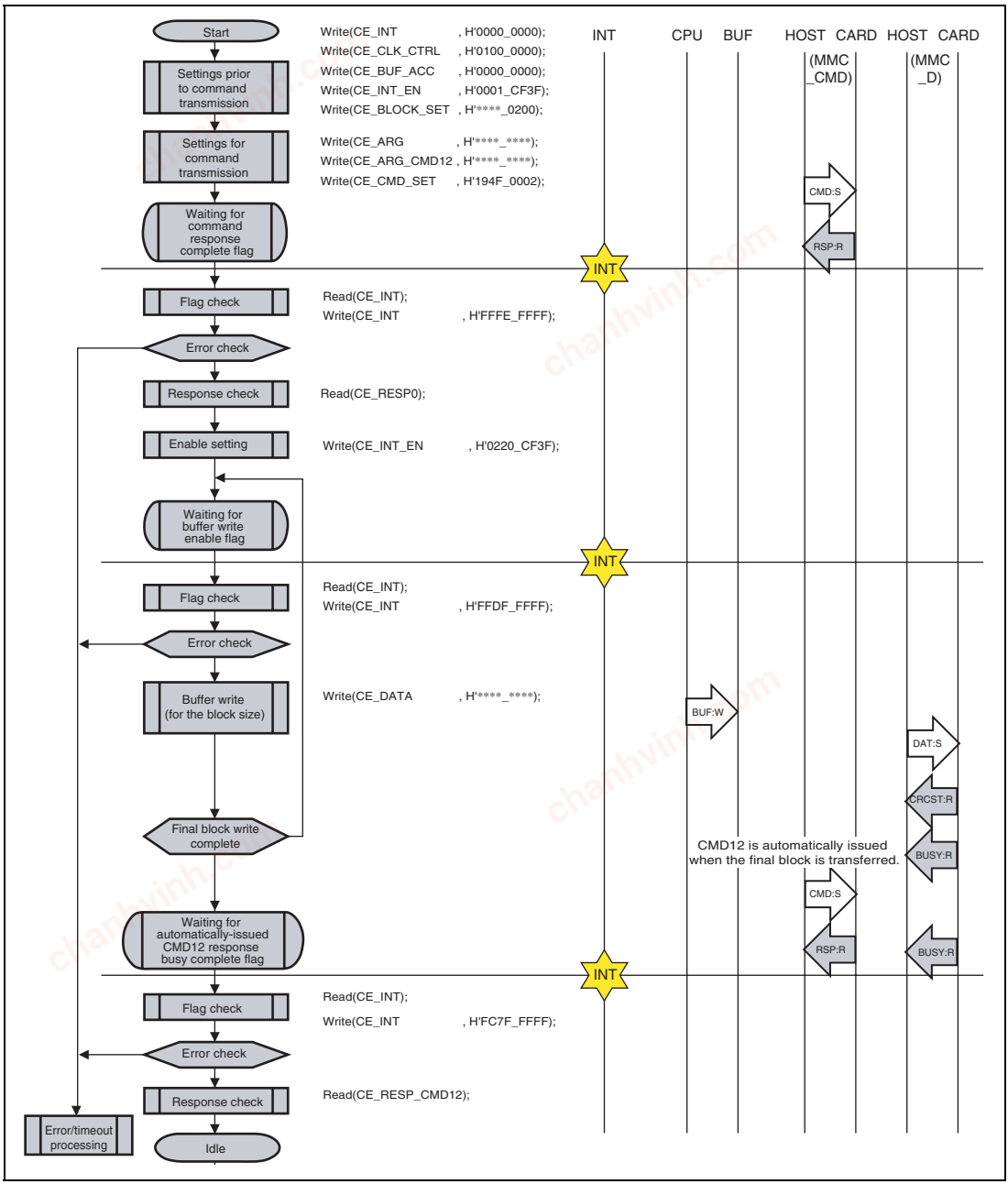

Figure 45.20 Multi-Block Write (with Automatic CMD12 Issuance) (CMD25 Open-Ended)

chanhvinh.com

45.7.11 Forcible Termination

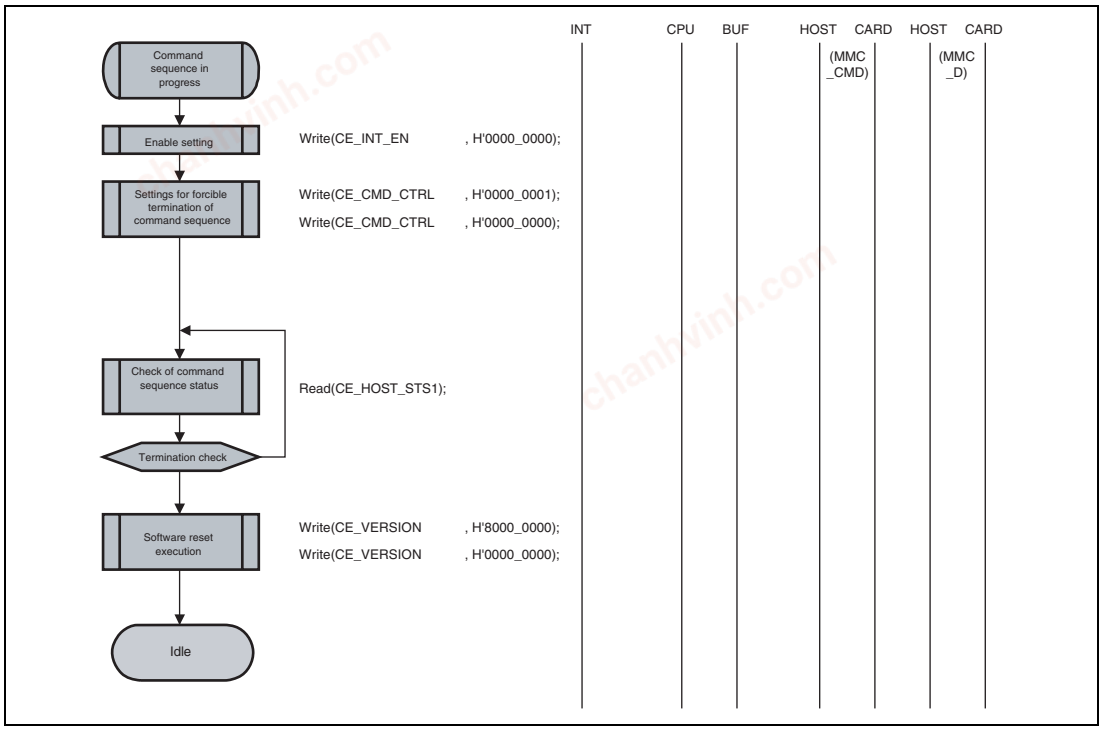

Figure 45.21 Forcible Termination

chanhvinh.com

45.7.12 Setting Values of CE_CMD_SET

Table 45.4 lists the setting values required to issue commands.

Table 45.4 Setting Values of CE_CMD_SET

Command	Response	CE_CMD_SET																						Remarks
		-	-	CMD[5:0]	RTYP[1:0]	RBSY	-	WDAT	DWEN	CMLTE	CMD12EN	RIDXC[1:0]	RCRC7C[1:0]	-	CRC16C	-	CRCSTE	TBIT	OPDM	-	-	SBIT	-	DATW[1:0]	
CMD0	-	0	0	000000	00	0	0	0	0	0	0	00	00	0	0	0	0	0	0	0	0	0	0	00	
CMD1	R3	0	0	000001	01	0	0	0	0	0	0	01	01	0	0	0	0	0	0	0	0	0	0	00	
CMD2	R2	0	0	000010	10	0	0	0	0	0	0	01	10	0	0	0	0	0	0	0	0	0	0	00	
CMD3	R1	0	0	000011	01	0	0	0	0	0	0	00	00	0	0	0	0	0	0	0	0	0	0	00	
CMD4	-	0	0	000100	00	0	0	0	0	0	0	00	00	0	0	0	0	0	0	0	0	0	0	00	
CMD5	R1b	0	0	000101	01	1	0	0	0	0	0	00	00	0	0	0	0	0	0	0	0	0	0	00	
CMD6	R1b	0	0	000110	01	1	0	0	0	0	0	00	00	0	0	0	0	0	0	0	0	0	0	00	
CMD7	R1	0	0	000111	01	0	0	0	0	0	0	00	00	0	0	0	0	0	0	0	0	0	0	00	
	R1b	0	0	000111	01	1	0	0	0	0	0	00	00	0	0	0	0	0	0	0	0	0	0	00	
CMD8	R1	0	0	001000	01	0	0	1	0	0	0	00	00	0	0	0	0	0	0	0	0	0	*	**	
CMD9	R2	0	0	001001	10	0	0	0	0	0	0	01	10	0	0	0	0	0	0	0	0	0	0	00	
CMD10	R2	0	0	001010	10	0	0	0	0	0	0	01	10	0	0	0	0	0	0	0	0	0	0	00	
CMD12	R1	0	0	001100	01	0	0	0	0	0	0	00	00	0	0	0	0	0	0	0	0	0	0	00	
	R1b	0	0	001100	01	1	0	0	0	0	0	00	00	0	0	0	0	0	0	0	0	0	0	00	
CMD13	R1	0	0	001101	01	0	0	0	0	0	0	00	00	0	0	0	0	0	0	0	0	0	0	00	
CMD14	R1	0	0	001110	01	0	0	1	0	0	0	00	00	0	1	0	0	0	0	0	0	1	0	**	
CMD15	-	0	0	001111	00	0	0	0	0	0	0	00	00	0	0	0	0	0	0	0	0	0	0	00	
CMD16	R1	0	0	010000	01	0	0	0	0	0	0	00	00	0	0	0	0	0	0	0	0	0	0	00	
CMD17	R1	0	0	010001	01	0	0	1	0	0	0	00	00	0	0	0	0	0	0	0	0	0	*	**	
CMD18	R1	0	0	010010	01	0	0	1	0	1	0	00	00	0	0	0	0	0	0	0	0	0	*	**	Pre-defined
	R1	0	0	010010	01	0	0	1	0	1	1	00	00	0	0	0	0	0	0	0	0	0	*	**	Open-ended
CMD19	R1	0	0	010011	01	0	0	1	1	0	0	00	00	0	0	0	1	0	0	0	0	0	0	**	
CMD23	R1	0	0	010111	01	0	0	0	0	0	0	00	00	0	0	0	0	0	0	0	0	0	0	00	
CMD24	R1	0	0	011000	01	0	0	1	1	0	0	00	00	0	0	0	0	0	0	0	0	0	*	**	
CMD25	R1	0	0	011001	01	0	0	1	1	1	0	00	00	0	0	0	0	0	0	0	0	0	*	**	Pre-defined
	R1	0	0	011001	01	0	0	1	1	1	1	00	00	0	0	0	0	0	0	0	0	0	*	**	Open-ended
CMD26	R1	0	0	011010	01	0	0	1	1	0	0	00	00	0	0	0	0	0	0	0	0	0	*	**	
CMD27	R1	0	0	011011	01	0	0	1	1	0	0	00	00	0	0	0	0	0	0	0	0	0	*	**	
CMD28	R1b	0	0	011100	01	1	0	0	0	0	0	00	00	0	0	0	0	0	0	0	0	0	0	00	
CMD29	R1b	0	0	011101	01	1	0	0	0	0	0	00	00	0	0	0	0	0	0	0	0	0	0	00	

chanhvinh.com

Command	Response	CE_CMD_SET																						Remarks
		-	-	CMD[5:0]	RTYP[1:0]	RBSY	-	WDAT	DWEN	CMLTE	CMD12EN	RIDXC[1:0]	RCRC7C[1:0]	-	CRC16C	-	CRCSTE	TBIT	OPDM	-	-	SBIT	-	DATW[1:0]	
CMD30	R1	0	0	011110	01	0	0	1	0	0	0	00	00	0	0	0	0	0	0	0	0	0	*	**	
CMD31	R1	0	0	011111	01	0	0	1	0	0	0	00	00	0	0	0	0	0	0	0	0	0	*	**	
CMD35	R1	0	0	100011	01	0	0	0	0	0	0	00	00	0	0	0	0	0	0	0	0	0	0	00	
CMD36	R1	0	0	100100	01	0	0	0	0	0	0	00	00	0	0	0	0	0	0	0	0	0	0	00	
CMD38	R1b	0	0	100110	01	1	0	0	0	0	0	00	00	0	0	0	0	0	0	0	0	0	0	00	
CMD39	R4	0	0	100111	01	0	0	0	0	0	0	00	00	0	0	0	0	0	0	0	0	0	0	00	
CMD40	R5	0	0	101000	01	0	0	0	0	0	0	00	00	0	0	0	0	0	0	0	0	0	0	00	Send CMD
	R5	0	0	101000	01	0	0	0	0	0	0	00	00	0	0	0	0	1	1	0	0	0	0	00	Send RSP
CMD42	R1	0	0	101010	01	0	0	1	1	0	0	00	00	0	0	0	0	0	0	0	0	0	0	**	
CMD55	R1	0	0	110111	01	0	0	0	0	0	0	00	00	0	0	0	0	0	0	0	0	0	0	00	
CMD56	R1	0	0	111000	01	0	0	1	0	0	0	00	00	0	0	0	0	0	0	0	0	0	*	**	Read
	R1	0	0	111000	01	0	0	1	1	0	0	00	00	0	0	0	0	0	0	0	0	0	*	**	Read

Note: This module does not support CMD11 and CMD20.

chanhvinh.com

45.8 Usage Note

45.8.1 Card Detection

The CDRISE and CDFALL bits in CE_DETECT which are used for the card detection function do not have a chattering elimination function. The chattering elimination processing should be implemented by software.

chanhvinh.com

Section 46 Motor Control PWM Timer

This LSI has two channels of on-chip motor control PWM (pulse width modulator) timer with a maximum capability of eight pulse outputs for each channel.

46.1 Features

- Maximum of 16 pulse outputs
  - Two 10-bit PWM channels, each with eight outputs.
  - 10-bit counter (PWCNT) and cycle register (PWCYR).
  - Duty and output polarity can be set for each output.
- Automatic data transfer in every cycle
  - Each of four duty registers (PWDTR) is provided with buffer registers (PWBFR), with data transferred automatically every cycle.
- Duty settings selectable
  - A duty cycle of 0% to 100% can be selected by means of a duty register setting.
- Counting clock selectable
  - There is a choice of five counting clocks (P0ϕ, P0ϕ/2, P0ϕ/4, P0ϕ/8, P0ϕ/16).
- High-speed access via internal 16-bit bus
- Two interrupt sources
  - An interrupt can be requested independently for each channel by a cycle register compare match.
- Automatic transfer of register data
  - Block transfer and one-word data transfer are available by activating the direct memory access controller.
- Module stop mode can be set

chanhvinh.com

Figure 46.1 shows a block diagram of the motor control PWM timer.

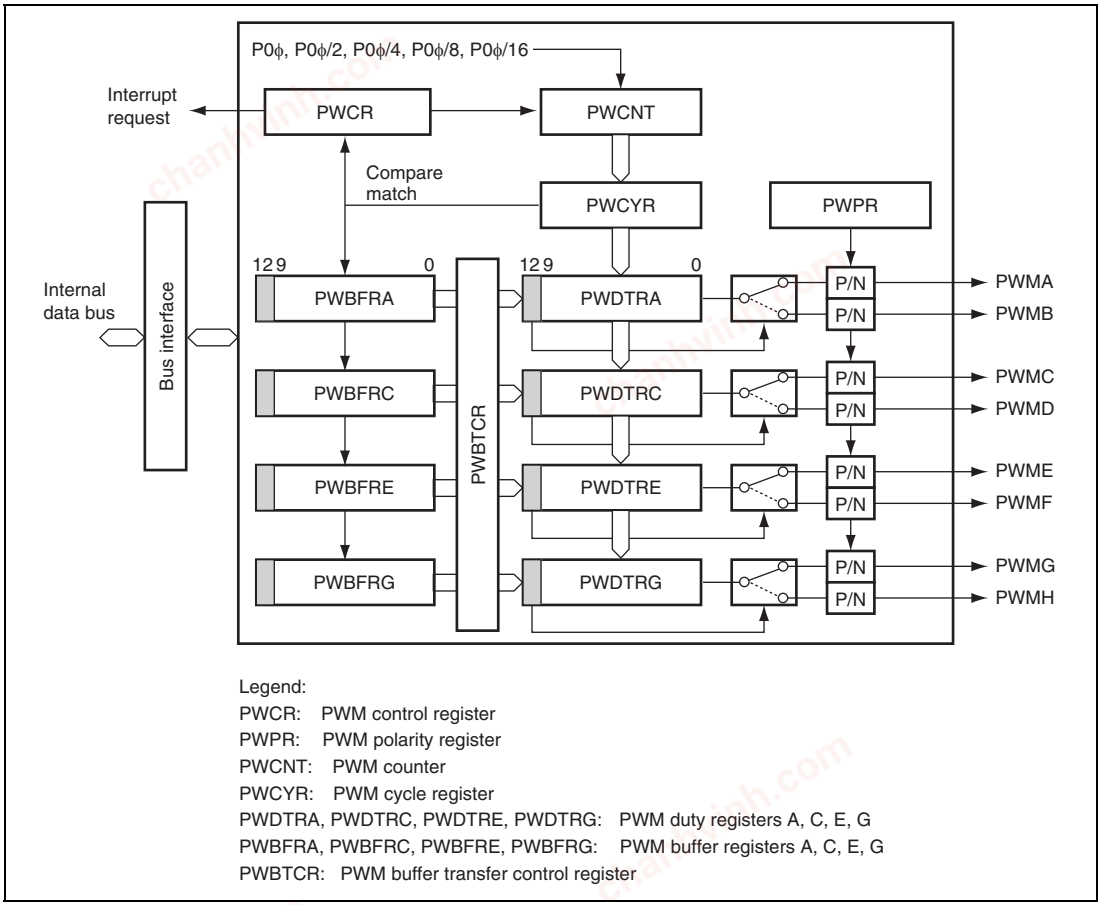

Figure 46.1 Block Diagram of Motor Control PWM Timer

chanhvinh.com

46.2 Input/Output Pins

Table 46.1 shows the pin configuration of this module.

Table 46.1 Pin Configuration

Channel	Name	Abbrev.	I/O	Function
1	PWM output pin 1A	PWM1A	Output	Channel 1A PWM output
	PWM output pin 1B	PWM1B	Output	Channel 1B PWM output
	PWM output pin 1C	PWM1C	Output	Channel 1C PWM output
	PWM output pin 1D	PWM1D	Output	Channel 1D PWM output
	PWM output pin 1E	PWM1E	Output	Channel 1E PWM output
	PWM output pin 1F	PWM1F	Output	Channel 1F PWM output
	PWM output pin 1G	PWM1G	Output	Channel 1G PWM output
	PWM output pin 1H	PWM1H	Output	Channel 1H PWM output
2	PWM output pin 2A	PWM2A	Output	Channel 2A PWM output
	PWM output pin 2B	PWM2B	Output	Channel 2B PWM output
	PWM output pin 2C	PWM2C	Output	Channel 2C PWM output
	PWM output pin 2D	PWM2D	Output	Channel 2D PWM output
	PWM output pin 2E	PWM2E	Output	Channel 2E PWM output
	PWM output pin 2F	PWM2F	Output	Channel 2F PWM output
	PWM output pin 2G	PWM2G	Output	Channel 2G PWM output
	PWM output pin 2H	PWM2H	Output	Channel 2H PWM output

chanhvinh.com

46.3 Register Descriptions

This module has the following registers for each channel as listed in table 46.2.

Table 46.2 Register Description

Register Name	Abbreviation	R/W	Initial Value	Address	Access Size
PWM control register_1	PWCR_1	R/W	H'C0	H'FFFEF4E0	8, 16
PWM polarity register_1	PWPR_1	R/W	H'00	H'FFFEF4E4	8, 16
PWM cycle register_1	PWCYR_1	R/W	H'FFFF	H'FFFEF4E6	16
PWM buffer register_1A	PWBFR_1A	R/W	H'EC00	H'FFFEF4E8	16
PWM buffer register_1C	PWBFR_1C	R/W	H'EC00	H'FFFEF4EA	16
PWM buffer register_1E	PWBFR_1E	R/W	H'EC00	H'FFFEF4EC	16
PWM buffer register_1G	PWBFR_1G	R/W	H'EC00	H'FFFEF4EE	16
PWM control register_2	PWCR_2	R/W	H'C0	H'FFFEF4F0	8, 16
PWM polarity register_2	PWPR_2	R/W	H'00	H'FFFEF4F4	8, 16
PWM cycle register_2	PWCYR_2	R/W	H'FFFF	H'FFFEF4F6	16
PWM buffer register_2A	PWBFR_2A	R/W	H'EC00	H'FFFEF4F8	16
PWM buffer register_2C	PWBFR_2C	R/W	H'EC00	H'FFFEF4FA	16
PWM buffer register_2E	PWBFR_2E	R/W	H'EC00	H'FFFEF4FC	16
PWM buffer register_2G	PWBFR_2G	R/W	H'EC00	H'FFFEF4FE	16
PWM buffer transfer control register	PWBTCR	R/W	H'00	H'FFFEF406	8, 16

chanhvinh.com

46.3.1 PWM Control Register_n (PWCR_n) (n = 1, 2)

PWCR_n performs interrupt control, starting/stopping of the counter, and counter clock selection. It also contains a flag that indicates a compare match with the cycle register.

Bit	7	6	5	4	3	2	1	0
Bit Name	—	—	IE	CMF	CST	CKS2	CKS1	CKS0
Initial Value	1	1	0	0	0	0	0	0
R/W	—	—	R/W	R/(W)*	R/W	R/W	R/W	R/W

Bit	Bit Name	Initial Value	R/W	Description
7, 6	—	All 1	—	Reserved These bits are always read as 1 and cannot be modified.
5	IE	0	R/W	Interrupt Enable Enables or disables an interrupt request in the event of a compare match with PWCYR_n of the corresponding channel. 0: Interrupt disabled 1: Interrupt enabled
4	CMF	0	R/(W)*	Compare Match Flag Indicates the occurrence of a compare match with PWCYR_n of the corresponding channel. [Setting condition] When PWCNT_n = PWCYR_n – 1 [Clearing conditions] • When 0 is written to CMF after reading CMF = 1 • When the direct memory access controller is activated by a compare match interrupt, and the DTA bit in DMDR of the direct memory access controller is 1 (When the CPU is used to clear this flag by writing 0 while the corresponding interrupt is enabled, be sure to read the flag after writing 0 to it.)

chanhvinh.com

Bit	Bit Name	Initial Value	R/W	Description
3	CST	0	R/W	Counter Start Selects starting or stopping of PWCNT_n of the corresponding channel. 0: PWCNT_n is stopped 1: PWCNT_n is started
2	CKS2	0	R/W	Clock Select
1	CKS1	0	R/W	These bits select the operating clock for PWCNT_n of the corresponding channel.
0	CKS0	0	R/W	000: Counts on P0ϕ/1 001: Counts on P0ϕ/2 010: Counts on P0ϕ/4 011: Counts on P0ϕ/8 1XX: Counts on P0ϕ/16

[Legend]

X: Don't care

Note: * Only 0 can be written, to clear the flag.

chanhvinh.com

46.3.2 PWM Polarity Register_n (PWPR_n) (n = 1, 2)

PWPR_n selects the PWM output polarity.

Bit	7	6	5	4	3	2	1	0
Bit Name	OPSnH	OPSnG	OPSnF	OPSnE	OPSnD	OPSnC	OPSnB	OPSnA
Initial Value	0	0	0	0	0	0	0	0
R/W	R/W	R/W	R/W	R/W	R/W	R/W	R/W	R/W

Bit	Bit Name	Initial Value	R/W	Description
7	OPSnH	0	R/W	Output Polarity Select Each of these bits selects the PWM output polarity. 0: PWM direct output 1: PWM inverse output
6	OPSnG	0	R/W	
5	OPSnF	0	R/W	
4	OPSnE	0	R/W	
3	OPSnD	0	R/W	
2	OPSnC	0	R/W	
1	OPSnB	0	R/W	
0	OPSnA	0	R/W	

(n = 1, 2)

46.3.3 PWM Counter_n (PWCNT_n) (n = 1, 2)

PWCNT_n is a 10-bit up-counter incremented by the input clock. The input clock is selected by clock select bits CKS2 to CKS0 in PWCR_n.

PWCNT_n can not be directly accessed by the CPU. PWCNT_n is initialized to H'FC00, when the CST bit in PWCRn is cleared to 0.

chanhvinh.com

46.3.4 PWM Cycle Register_n (PWCYR_n) (n = 1, 2)

PWCYR_n is a 16-bit readable/writable register that sets the PWM conversion cycle.

Bit:	15	14	13	12	11	10	9	8
	PWCY15	PWCY14	PWCY13	PWCY12	PWCY11	PWCY10	PWCY9	PWCY8
Initial value:	1	1	1	1	1	1	1	1
R/W:	R/W	R/W	R/W	R/W	R/W	R/W	R/W	R/W

Bit:	7	6	5	4	3	2	1	0
	PWCY7	PWCY6	PWCY5	PWCY4	PWCY3	PWCY2	PWCY1	PWCY0
Initial value:	1	1	1	1	1	1	1	1
R/W:	R/W	R/W	R/W	R/W	R/W	R/W	R/W	R/W

When a PWCYR_n compare match occurs, PWCNT_n is cleared and data is transferred from the buffer register (PWBFR_n) to the duty register (PWDTR_n).

PWCYR_n should be written to only while PWCNT_n is stopped. A value of H'FC00 must not be set to PWCYR_n.

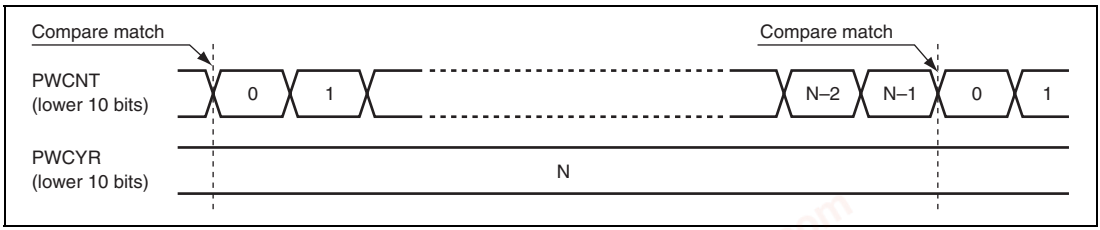

Figure 46.2 Cycle Register Compare Match

chanhvinh.com

46.3.5 PWM Duty Registers_nA, nC, nE, nG (PWDTR_nA, PWDTR_nC, PWDTR_nE, PWDTR_nG) (n = 1, 2)

There are four PWDTR_n registers (PWDTR_nA, PWDTR_nC, PWDTR_nE, and PWDTR_nG). The PWDTR_nA is used for outputs PWMnA and PWMnB, PWDTR_nC for outputs PWMnC and PWMnD, PWDTR_nE for outputs PWMnE and PWMnF, and PWDTR_nG for outputs PWMnG and PWMnH.

PWDTR_n can not be directly accessed by the CPU. When a PWCYR_n compare match occurs, data is transferred from the buffer register (PWBFR_n) to the duty register (PWDTR_n). PWDTR_n is initialized to H'00 when the CST bit is cleared to 0.

Bit	15	14	13	12	11	10	9	8
Bit Name	—	—	—	OTS	—	—	DT9	DT8
Initial Value	—	—	—	0	—	—	0	0
R/W	—	—	—	—	—	—	—	—

Bit	7	6	5	4	3	2	1	0
Bit Name	DT7	DT6	DT5	DT4	DT3	DT2	DT1	DT0
Initial Value	0	0	0	0	0	0	0	0
R/W	—	—	—	—	—	—	—	—

chanhvinh.com

Bit	Bit Name	Initial Value	R/W	Description
15 to 13	—	—	—	Reserved
12	OTS	0	—	Output Terminal Select Selects the pin used for PWM output. Unselected pins output a low level (or a high level when the corresponding bit in PWPR_n is set to 1). For details, see table 46.3.
11, 10	—	—	—	Reserved
9	DT9	0	—	Duty These bits specify the PWM output duty. A high level (or a low level when the corresponding bit in PWPR_n is set to 1) is output from the time PWCNT_n is cleared by a PWCYR_n compare match until a PWDTR_n compare match occurs. When all of the bits are 0, there is no high-level (or low-level when the corresponding bit in PWPR_n is set to 1) output period.
8	DT8	0	—	
7	DT7	0	—	
6	DT6	0	—	
5	DT5	0	—	
4	DT4	0	—	
3	DT3	0	—	
2	DT2	0	—	
1	DT1	0	—	
0	DT0	0	—	

Table 46.3 Output Selection by OTS Bit

	Bit 12	
Register	OTS	Description
PWDTR_1A/ PWDTR_2A	0	PWMnA output selected
	1	PWMnB output selected
PWDTR_1C/ PWDTR_2C	0	PWMnC output selected
	1	PWMnD output selected
PWDTR_1E/ PWDTR_2E	0	PWMnE output selected
	1	PWMnF output selected
PWDTR_1G/ PWDTR_2G	0	PWMnG output selected
	1	PWMnH output selected

chanhvinh.com

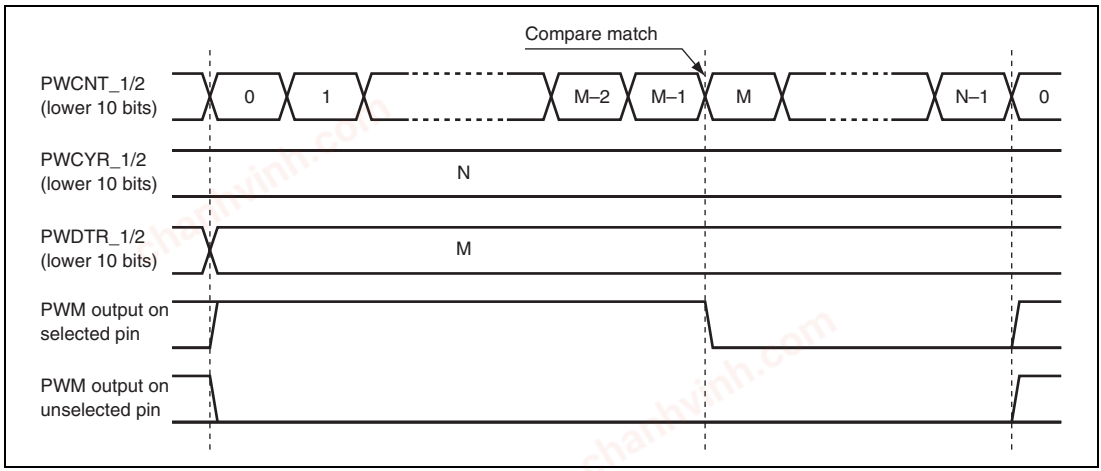

Figure 46.3 Duty Register Compare Match (OPS = 0 in PWPR_n)

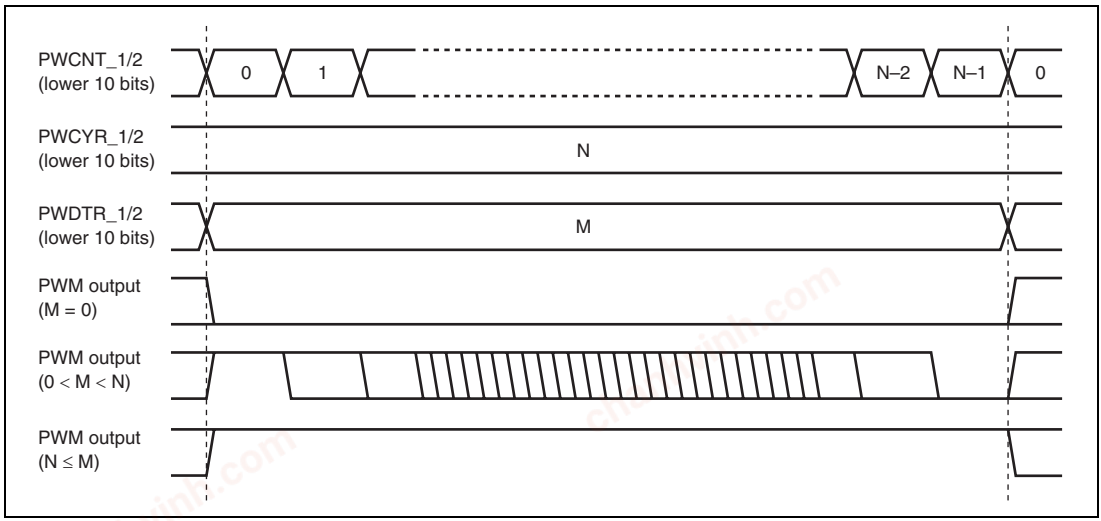

Figure 46.4 Differences in PWM Output According to Duty Register Set Value (OPS = 0 in PWPR_n)

chanhvinh.com

46.3.6 PWM Buffer Registers_nA, nC, nE, nG (PWBFR_nA, PWBFR_nC, PWBFR_nE, PWBFR_nG) (n = 1, 2)

There are four PWBFR_n registers (PWBFR_nA, PWBFR_nC, PWBFR_nE, and PWBFR_nG). When a PWCYR_n compare match occurs, data is transferred from the buffer register (PWBFR_n) to the duty register (PWDTR_n).

Bit:	15	14	13	12	11	10	9	8
	—	—	—	OTS	—	—	DT9	DT8
Initial Value:	1	1	1	0	1	1	0	0
R/W:	R	R	R	R/W	R	R	R/W	R/W

Bit:	7	6	5	4	3	2	1	0
	DT7	DT6	DT5	DT4	DT3	DT2	DT1	DT0
Initial Value:	0	0	0	0	0	0	0	0
R/W:	R/W	R/W	R/W	R/W	R/W	R/W	R/W	R/W

Bit	Bit Name	Initial Value	R/W	Description
15 to 13	—	All 1	R	Reserved These bits are always read as 1 and cannot be modified.
12	OTS	0	R/W	Output Terminal Select Holds the data to be sent to bit 12 in PWDTR_n.
11, 10	—	All 1	R	Reserved These bits are always read as 1 and cannot be modified.
9	DT9	0	R/W	Duty These bits hold the data to be sent to bits 9 to 0 in PWDTR_n.
8	DT8	0	R/W	
7	DT7	0	R/W	
6	DT6	0	R/W	
5	DT5	0	R/W	
4	DT4	0	R/W	
3	DT3	0	R/W	
2	DT2	0	R/W	
1	DT1	0	R/W	
0	DT0	0	R/W	

chanhvinh.com

46.3.7 PWM Buffer Transfer Control Register (PWBTCR)

PWBTCR enables or disables the data transfer from buffer register to duty register with the compare match of PWM counter and PWM cycle register.

Bit	7	6	5	4	3	2	1	0
Bit Name	BTC2G	BTC2E	BTC2C	BTC2A	BTC1G	BTC1E	BTC1C	BTC1A
Initial Value	0	0	0	0	0	0	0	0
R/W	R/W	R/W	R/W	R/W	R/W	R/W	R/W	R/W

Bit	Bit Name	Initial Value	R/W	Description
7	BTC2G	0	R/W	0: Data transfer from PWBFR_n to PWDTR_n is enabled with PWCNT_n and PWCYR_n compare match 1: Data transfer from PWBFR_n to PWDTR_n is disabled with PWCNT_n and PWCYR_n compare match
6	BTC2E	0	R/W	
5	BTC2C	0	R/W	
4	BTC2A	0	R/W	
3	BTC1G	0	R/W	
2	BTC1E	0	R/W	
1	BTC1C	0	R/W	
0	BTC1A	0	R/W	

chanhvinh.com

46.4 Bus Master Interface

46.4.1 16-Bit Data Registers

PWCYR_n and PWBFR_n are 16-bit registers. These registers are linked to the bus master by a 16-bit data bus, and can be read or written in 16-bit units. They cannot be read or written by 8-bit access; 16-bit access must always be used.

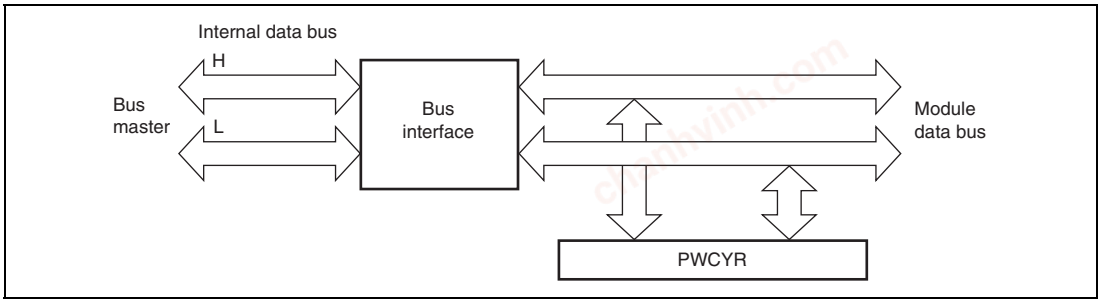

Figure 46.5 16-Bit Register Access Operation (Bus Master ↔ PWCYR_n (16 Bits))

46.4.2 8-Bit Data Registers

PWCR_n, PWPR_n, and PWBTCR are 8-bit registers that can be read and written to in 8-bit units. These registers are linked to the bus master by a 16-bit data bus, and can be read or written by 16-bit access; in this case, the lower eight bits are read as H'FF.

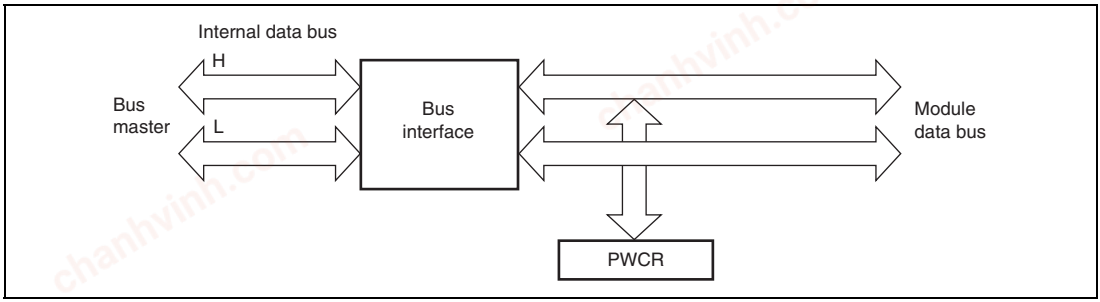

Figure 46.6 8-Bit Register Access Operation (Bus Master ↔ PWCR_n (Upper Eight Bits))

chanhvinh.com

46.5 Operation

46.5.1 PWM Operation

PWM waveforms are output from pins PWM1A to PWM1H and PWM2A to PWM2H as shown in figure 46.7.

(1) Initial Settings

Set the PWM output polarity in PWPR_n; select the clock to be input to PWCNT_n with the CKS2 to CKS0 bits in PWCRn; set the PWM conversion cycle in PWCYR_n; and set the first frame of data in PWBFR_nA, PWBFR_nC, PWBFR_nE, and PWBFR_nG.

(2) Activation

When the CST bit in PWCR_n is set to 1, PWCNT_n starts counting up. On compare match between PWCNT_n and PWCYR_n, data is transferred from the buffer register to the duty register and the CMF bit in PWCR_n is set to 1. At the same time, if the IE bit in PWCR_n has been set to 1, an interrupt can be requested or the direct memory access controller can be activated.

(3) Waveform Output

The PWM outputs selected by the OTS bits in PWDTR_nA, PWDTR_nC, PWDTR_nE, and PWDTR_nG go high when a compare match occurs between PWCNT_n and PWCYR_n. The PWM outputs not selected by the OTS bit are low. When a compare match occurs between PWCNT_n and PWDTR_nA, PWDTR_nC, PWDTR_nE, or PWDTR_nG, the corresponding PWM output goes low. If the corresponding bit in PWPR_n is set to 1, the output is inverted.

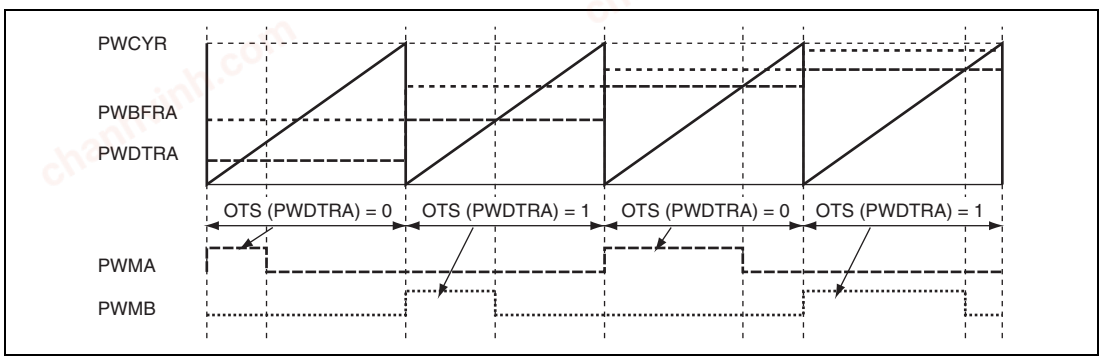

Figure 46.7 PWM Operation

chanhvinh.com

(4) Next Frame

When a compare match occurs between PWCNT_n and PWCYR_n, data is transferred from the buffer register to the duty register. PWCNT_n is reset and starts counting up from H'000. The CMF bit in PWCR_n is set, and if the IE bit in PWCR_n has been set, an interrupt can be requested or the direct memory access controller can be activated.

(5) Stopping

When the CST bit in PWCR_n is cleared to 0, PWCNT_n is reset and stops. All PWM outputs go low (or high if the corresponding bit in PWPR_n is set to 1).

46.5.2 Buffer Transfer Control

Setting a corresponding bit in the PWM buffer transfer control register disables a buffer transfer on compare match. This prevents the output from changing when compare match occurs while the buffer register is being changed. A buffer transfer on compare match is resumed after cleaning the bit.

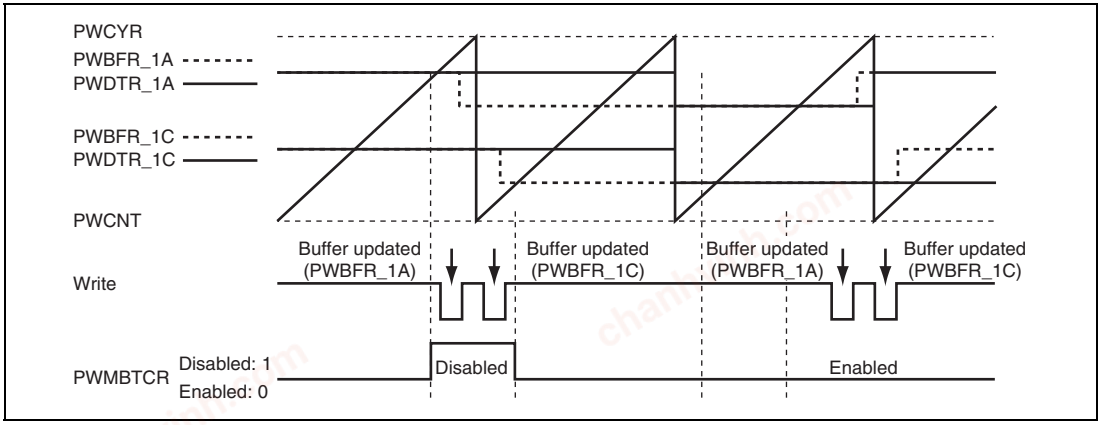

Figure 46.8 Disabling Buffer Transfer

chanhvinh.com

46.6 Usage Note

46.6.1 Conflict between Buffer Register Write and Compare Match

If a PWBFR_n write is performed in the state immediately after a cycle register compare match, the buffer register and duty register are both modified. PWM output changed by the cycle register compare match is not changed by modification of the duty register due to conflict. This may result in unanticipated duty output.

Buffer register modification must be completed before automatic transfer by the direct memory access controller, exception handling due to a compare match interrupt, or the occurrence of a cycle register compare match on detection of the rise of CMF (compare match flag) in PWCR_n.

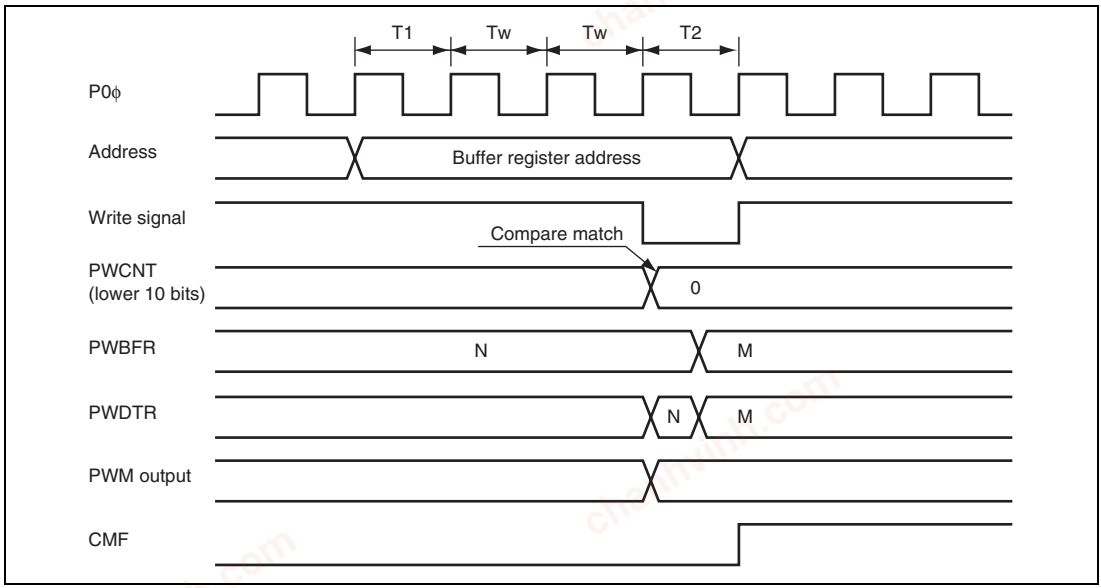

Figure 46.9 Conflict between Buffer Register Write and Compare Match

chanhvinh.com

chanhvinh.com
chanhvinh.com
chanhvinh.com

chanhvinh.com

Section 47 On-Chip RAM

This LSI has an on-chip high-speed RAM, which achieves fast access, an on-chip large-capacity RAM for display area and work area (128 Kbytes of this RAM are shared with the on-chip data retention RAM), and an on-chip data retention RAM, which can retain data in deep standby mode. These memory units can be used to store instructions or data.

The operation and write access to the on-chip high-speed RAM and large-capacity RAM (including on-chip data retention RAM) can be enabled or disabled through the RAM enable bits and RAM write enable bits.

The on-chip data retention RAM is assigned to page 0 of the on-chip large-capacity RAM. Retention or non-retention of data by the on-chip data retention RAM in deep standby mode is selectable on a per-page basis.

47.1 Features

- Page
  - The on-chip high-speed RAM consists of four pages. The size of one page is 16 Kbytes.
  - The on-chip large-capacity RAM consists of six pages.
  - The on-chip data retention RAM consists of four pages. Page 0 has 16-Kbytes, page 1 has 16-Kbytes, page 2 has 32-Kbytes, and page 3 has 64-Kbytes.
- Memory map

  The on-chip RAM is located in the address spaces shown in tables 47.1 to 47.3.

Table 47.1 Address Spaces of On-Chip High-Speed RAM

Page	Address
Page 0	H'FFF80000 to H'FFF83FFF
Page 1	H'FFF84000 to H'FFF87FFF
Page 2	H'FFF88000 to H'FFF8BFFF
Page 3	H'FFF8C000 to H'FFF8FFFF

chanhvinh.com

Table 47.2 Address Spaces of On-Chip Large-Capacity RAM

Page	Cache-enabled Address	Cache-disabled Address
Page 0 (256KB)	H'1C000000 to H'1C03FFFF	H'3C000000 to H'3C03FFFF
Page 1 (256KB)	H'1C040000 to H'1C07FFFF	H'3C040000 to H'3C07FFFF
Page 2 (512KB)	H'1C080000 to H'1C0FFFFF	H'3C080000 to H'3C0FFFFF
Page 3 (512KB)	H'1C100000 to H'1C17FFFF	H'3C100000 to H'3C17FFFF
Page 4 (512KB)	H'1C180000 to H'1C1FFFFF	H'3C180000 to H'3C1FFFFF
Page 5 (512KB)	H'1C200000 to H'1C27FFFF	H'3C200000 to H'3C27FFFF

Table 47.3 Address Spaces of On-Chip Data Retention RAM

Page	Cache-enabled Address	Cache-disabled Address
Page 0 (16KB)	H'1C000000 to H'1C003FFF	H'3C000000 to H'3C003FFF
Page 1 (16KB)	H'1C004000 to H'1C007FFF	H'3C004000 to H'3C007FFF
Page 2 (32KB)	H'1C008000 to H'1C00FFFF	H'3C008000 to H'3C00FFFF
Page 3 (64KB)	H'1C010000 to H'1C01FFFF	H'3C010000 to H'3C01FFFF

- Ports

  Each page of the on-chip high-speed RAM has two independent read and write ports and is connected to the internal DMA bus (ID bus), CPU instruction fetch bus (F bus), and CPU memory access bus (M bus). (Note that the F bus is connected only to the read ports.)

  The F bus and M bus are used for access by the CPU, and the ID bus is used for access by the direct memory access controller.

  Each page of the on-chip large-capacity RAM has one read and write port and is connected to the internal CPU bus (IC bus), internal DMA bus (ID bus) and internal graphics buses (IV1 to IV4, RGP1 to RGP4). The on-chip RAM for data retention is included in page 0 of the on-chip large-capacity RAM. Accordingly, the on-chip RAM for data retention is shared with the read and write port of page 0 of the on-chip large-capacity RAM.

chanhvinh.com

- Priority

  When the same page of the on-chip high-speed RAM is accessed from different buses simultaneously, the access is processed according to the priority. The priority is ID bus > M bus > F bus.

  When the same page of the on-chip large-capacity RAM is accessed from different buses simultaneously, the access is processed according to the priority. The priority is (A) > RGP1 bus > RGP2 bus> RGP3 bus > RGP4 bus. (A) operates in round robin mode, and the priority order is switched among the IV1 bus (read), IV1 bus (write), IV2 bus, IV3 bus, IV4 bus, IC bus, and ID bus.

- Number of access cycles

  On-chip high-speed RAM: the number of cycles for access to read or write from buses F and I is one cycle of Iϕ. Number of cycles for access from the ID bus depend on the ratio of the CPU clock (Iϕ) to the internal bus clock (Bϕ). Table 47.4 indicates number of cycles for access from the ID bus.

Table 47.4 Number of Cycles for Access to On-Chip High-Speed RAM from the ID Bus

Read/Write	Ratio of Iϕ and Bϕ	Number of Access (Bϕ) Cycles
Read	1:1	3
	2:1	2
	3:1	2
	4:1	2
	6:1	1
	8:1	1
Write	1:1	2
	2:1	2
	3:1	2
	4:1	2
	6:1	1
	8:1	1

Note: For the settable ratios of Iϕ to Bϕ, see section 5, Clock Pulse Generator.

On-chip large-capacity RAM: the number of cycles for access to read or write from any bus is one cycle of Bϕ.

chanhvinh.com

47.2 Usage Notes

47.2.1 Page Conflict

When the same page of the on-chip high-speed RAM or the on-chip large-capacity RAM is accessed from different buses simultaneously, a conflict on the page occurs. Although each access is completed correctly, this kind of conflict degrades the memory access speed. Therefore, it is advisable to provide software measures to prevent such conflicts as far as possible. For example, no conflict will arise if different pages are accessed by each bus.

47.2.2 RAME and RAMWE Bits

Before disabling memory operation or write access to the on-chip high-speed RAM through the RAME or RAMWE bit, be sure to read from any address and then write to the same address in each page; otherwise, the last written data in each page may not be actually written to the RAM.

```
// For page 0
  MOV.L  #H'FFF80000,R0
  MOV.L  @R0,R1
  MOV.L  R1,@R0

 // For page 1
  MOV.L  #H'FFF84000,R0
  MOV.L  @R0,R1
  MOV.L  R1,@R0

 // For page 2
  MOV.L  #H'FFF88000,R0
  MOV.L  @R0,R1
  MOV.L  R1,@R0

 // For page 3
  MOV.L  #H'FFF8C000,R0
  MOV.L  @R0,R1
  MOV.L  R1,@R0
```

Figure 47.1 Examples of Read/Write

chanhvinh.com

47.2.3 Data Retention

Data in the on-chip high-speed RAM and the large-capacity RAM (including on-chip data retention RAM) are retained in the states other than power-on reset and deep standby mode. In power-on reset and deep standby mode, these RAMs operate as described below.

(1) Power-on Reset

(a) On-Chip High-Speed RAM

Data are retained on a power-on reset by disabling the setting of either the RAME or RAMWE bit.

Data are not retained when the setting of the RAME and RAMWE bits are both enabled.

(b) On-Chip Large-Capacity RAM (Excluding On-Chip Data Retention RAM)

Data are retained on a power-on reset by disabling the setting of either the VRAME or VRAMWE bit.

Data are not retained when the setting of the VRAME and VRAMWE bits are both enabled.

(c) On-Chip Data Retention RAM

Data are retained on a power-on reset by disabling the setting of any of the VRAME, VRAMWE, or RRAMWE, excluding the case that deep standby mode is canceled by power-on reset.

Data are not retained when the setting of the VRAME, VRAMWE and RRAMWE bits are all enabled.

(2) Deep Standby Mode

(a) On-Chip High-Speed RAM and On-Chip Large-Capacity RAM (Excluding On-Chip Data Retention RAM)

Data are not retained.

(b) On-Chip Data Retention RAM

Data are retained in deep standby mode by enabling the setting of the RRAMKP bit, excluding the case that deep standby mode is canceled by power-on reset. In the case that deep standby mode is canceled by interrupt or pins for cancelling, power-on reset exception handling is executed, but the data are retained.

chanhvinh.com

chanhvinh.com
chanhvinh.com
chanhvinh.com

chanhvinh.com

Section 48 General Purpose I/O Ports

This LSI has 9 general purpose I/O ports: A, B, C, D, E, F, G, H, and J.

All port pins are multiplexed with other peripheral module pin functions.

Each port is provided with registers for selecting the pin functions and those I/O directions of multiplex pins, data registers for storing the pin data and port registers for reading the states of the pins.

48.1 Features

- By setting the control registers, multiplexed pin functions can be selectable.
- When the general I/O function or TIOC I/O function of multi-function timer pulse unit 2 is specified, the I/O direction can be selected by I/O register settings.

Table 48.1 Number of General Purpose I/O Pins

Port	SH7268	SH7269
A	2 I/O pins	
B	22 I/O pins	
C	9 I/O pins	
D	16 I/O pins	
E	4 input pins with open-drain outputs	8 input pins with open-drain outputs
F	23 I/O pins	
G	28 I/O pins	
H	6 input pins	8 input pins
J	—	32 I/O pins
Total	111 pins (101 I/O pins, 4 input pins with open-drain outputs, and 6 input pins)	149 pins (133 I/O pins, 8 input pins with open-drain outputs, and 8 input pins)

chanhvinh.com

Tables 48.2 to 48.10 show the multiplex pins of this LSI. The registers and pin functions in the shaded cells are available only in the SH7269 Group.

Table 48.2 Multiplexed Pins (Port A)

	$\overline{\text{RES}}$ Pin input	
	H	L
Port	**Function 1**	**Function 2**
A	PA1	MD_BOOT1
	PA0	MD_BOOT0

Note: The function 2 of port A is enabled in the state of $\overline{\text{RES}}$ = L and always general I/O functions in the state of $\overline{\text{RES}}$ = H.

Table 48.3 Multiplexed Pins (Port B)

	Setting Mode Bits (PBnMD[2:0])					
Setting Register	**000**	**001**	**010**	**011**	**100**	**110**
	Function 1	**Function 2**	**Function 3**	**Function 4**	**Function 5**	**Function 7**
PBCR5	PB22	A22	CTx2	IETxD	$\overline{\text{CS4}}$	—
	PB21	A21	CRx2	IERxD	—	—
	PB20	A20	QMI_0/QIO1_0	MISO0	—	SPBMI_0/SPBIO1_0
PBCR4	PB19	A19	QMO_0/QIO0_0	MOSI0	—	SPBMO_0/SPBIO0_0
	PB18	A18	QSSL_0	SSL00	—	SPBSSL
	PB17	A17	QSPCLK_0	RSPCK0	—	SPBCLK
	PB16	A16	QIO3_0	—	—	SPBIO3_0
PBCR3	PB15	A15	QIO2_0	—	—	SPBIO2_0
	PB14	A14	QIO3_1	—	—	SPBIO3_1
	PB13	A13	QIO2_1	—	—	SPBIO2_1
	PB12	A12	TIOC3D	—	—	—
PBCR2	PB11	A11	TIOC3C	—	—	—
	PB10	A10	TIOC3B	—	—	—
	PB9	A9	TIOC3A	—	—	—
	PB8	A8	TIOC2B	—	—	—

chanhvinh.com

Setting Register	Setting Mode Bits (PBnMD[2:0])					
	000	001	010	011	100	110
	Function 1	Function 2	Function 3	Function 4	Function 5	Function 7
PBCR1	PB7	A7	TIOC2A	—	—	—
	PB6	A6	TIOC1B	—	—	—
	PB5	A5	TIOC1A	—	—	—
	PB4	A4	TIOC0D	—	—	—
PBCR0	PB3	A3	TIOC0C	—	—	—
	PB2	A2	TIOC0B	—	—	—
	PB1	A1	TIOC0A	—	—	—

chanhvinh.com

Table 48.4 Multiplexed Pins (Port C)

	Setting Mode Bits (PCnMD[2:0])					
	000	**001**	**010**	**011**	**100**	**101**
Setting Register	**Function 1**	**Function 2**	**Function 3**	**Function 4**	**Function 5**	**Function 6**
PCCR2	PC8	$\overline{CS3}$	TxD7	CTx1	CTx0&CTx1	—
PCCR1	PC7	CKE	RxD7	CRx1	CRx0/CRx1	IRQ1
	PC6	$\overline{CAS}$	SCK7	CTx0	CTx0&CTx1 &CTx2	—
	PC5	$\overline{RAS}$	—	CRx0	CRx0/CRx1/ CRx2	IRQ0
	PC4	$\overline{WE1}$/ DQMLU/ $\overline{WE}$	TxD6	—	—	—
PCCR0	PC3	$\overline{WE0}$/ DQMLL	RxD6	—	—	—
	PC2	RD/$\overline{WR}$	SCK6	—	—	—
	PC1	$\overline{RD}$	—	—	—	—
	PC0	$\overline{CS0}$	MD_BOOT2	—	—	—

Note: The function 3 of PC0 is enabled in the state of $\overline{RES}$ = L and the function 1 or 2 in the state of $\overline{RES}$ = H.

chanhvinh.com

Table 48.5 Multiplexed Pins (Port D)

	Setting Mode Bits (PDnMD[1:0])		
	00	01	10
Setting Register	Function 1	Function 2	Function 3
PDCR3	PD15	D15/NAF7	PWM2H
	PD14	D14/NAF6	PWM2G
	PD13	D13/NAF5	PWM2F
	PD12	D12/NAF4	PWM2E
PDCR2	PD11	D11/NAF3	PWM2D
	PD10	D10/NAF2	PWM2C
	PD9	D9/NAF1	PWM2B
	PD8	D8/NAF0	PWM2A
PDCR1	PD7	D7/$\overline{\text{FWE}}$	PWM1H
	PD6	D6/FALE	PWM1G
	PD5	D5/FCLE	PWM1F
	PD4	D4/$\overline{\text{FRE}}$	PWM1E
PDCR0	PD3	D3	PWM1D
	PD2	D2	PWM1C
	PD1	D1	PWM1B
	PD0	D0	PWM1A

Note: The function 2 of bus state controller and /or the function of NAND flash memory controller change automatically. (See section 10, Bus State Controller.).

chanhvinh.com

Table 48.6 Multiplexed Pins (Port E)

Setting Register	Setting Mode Bits (PEnMD[2:0])				
	000	001	010	011	100
	Function 1	Function 2	Function 3	Function 4	Function 5
PECR1	PE7	SDA3	RxD7	—	—
	PE6	SCL3	RxD6	—	—
	PE5	SDA2	RxD5	DV_HSYNC	—
	PE4	SCL2	RxD4	DV_VSYNC	—
PECR0	PE3	SDA1	TCLKD	$\overline{\text{ADTRG}}$	DV_HSYNC
	PE2	SCL1	TCLKC	$\overline{\text{IOIS16}}$	DV_VSYNC
	PE1	SDA0	TCLKB	AUDIO_CLK	DV_CLK
	PE0	SCL0	TCLKA	LCD_EXTCLK	—

Table 48.7 Multiplexed Pins (Port F)

Setting Register	Setting Mode Bits (PFnMD[2:0])						
	000	001	010	011	100	101	110
	Function 1	Function 2	Function 3	Function 4	Function 5	Function 6	Function 7
PFCR6	PF23	SD_D2_0	—	—	TxD3	MMC_D2	—
	PF22	SD_D3_0	—	—	RxD3	MMC_D3	—
	PF21	SD_CMD_0	—	—	SCK3	MMC_CMD	—
	PF20	SD_CLK_0	SSIDATA3	—	—	MMC_CLK	—
PFCR5	PF19	SD_D0_0	SSIWS3	—	IRQ7	MMC_D0	—
	PF18	SD_D1_0	SSISCK3	—	IRQ6	MMC_D1	—
	PF17	SD_WP_0	—	FRB	IRQ5	—	—
	PF16	SD_CD_0	—	$\overline{\text{FCE}}$	IRQ4	MMC_CD	—
PFCR4	PF15	A0	SSIDATA2	$\overline{\text{WDTOVF}}$	TxD2	$\overline{\text{UBCTRG}}$	—
PFCR3	PF14	A25	SSIWS2	—	RxD2	—	—
	PF13	A24	SSISCK2	—	SCK2	—	—
	PF12	—	SSIDATA1	DV_DATA3	TxD1	MMC_D7	—

chanhvinh.com

Setting Register	Setting Mode Bits (PFnMD[2:0])						
	000	001	010	011	100	101	110
	Function 1	Function 2	Function 3	Function 4	Function 5	Function 6	Function 7
PFCR2	PF11	—	SSIWS1	DV_DATA2	RxD1	MMC_D6	—
	PF10	$\overline{CS1}$	SSISCK1	DV_DATA1	SCK1	MMC_D5	—
	PF9	$\overline{BS}$	—	DV_DATA0	SCK0	MMC_D4	$\overline{RTS1}$
	PF8	A23	—	—	TxD0	—	—
PFCR1	PF7	—	SSIRxD0	—	RxD0	SGOUT_3	$\overline{CTS1}$
	PF6	$\overline{CE2A}$	SSITxD0	—	—	SGOUT_2	—
	PF5	—	SSIWS0	—	—	SGOUT_1	—
	PF4	$\overline{CS5}$/$\overline{CE1A}$	SSISCK0	—	—	SGOUT_0	—
PFCR0	PF3	$\overline{CS2}$	QMI_1/ QIO1_1	MISO1	TIOC4D	AUDIO_ XOUT	SPBMI_1/ SPBIO1_1
	PF2	$\overline{WAIT}$	QMO_1/ QIO0_1	MOSI1	TIOC4C	TEND0	SPBMO_1/ SPBIO0_1
	PF1	$\overline{BACK}$	QSSL_1	SSL10	TIOC4B	DACK0	—
	PF0	$\overline{BREQ}$	QSPCLK_1	RSPCK1	TIOC4A	DREQ0	—

Table 48.8 Multiplexed Pins (Port G)

Setting Register	Setting Mode Bits (PGnMD[2:0])				
	000	001	010	011	100
	Function 1	Function 2	Function 3	Function 4	Function 5
PGCR6	PG27	—	LCD_TCON2	LCD_EXTCLK	—
	PG26	—	LCD_TCON1	—	—
	PG25	—	LCD_TCON0	—	—
	PG24	—	LCD_CLK	—	—
PGCR5	PG23	—	LCD_DATA23	LCD_TCON6	TxD5
	PG22	—	LCD_DATA22	LCD_TCON5	RxD5
	PG21	DV_DATA7	LCD_DATA21	LCD_TCON4	TxD4
	PG20	DV_DATA6	LCD_DATA20	LCD_TCON3	RxD4

chanhvinh.com

Setting Register	Setting Mode Bits (PGnMD[2:0])				
	000	001	010	011	100
	Function 1	Function 2	Function 3	Function 4	Function 5
PGCR4	PG19	DV_DATA5	LCD_DATA19	SPDIF_OUT	SCK5
	PG18	DV_DATA4	LCD_DATA18	SPDIF_IN	SCK4
	PG17	$\overline{WE3}$/ICIOWR/ $\overline{AH}$/DQMUU	LCD_DATA17	—	—
	PG16	$\overline{WE2}$/ICIORD/ DQMUL	LCD_DATA16	—	—
PGCR3	PG15	D31	LCD_DATA15	PINT7	—
	PG14	D30	LCD_DATA14	PINT6	—
	PG13	D29	LCD_DATA13	PINT5	—
	PG12	D28	LCD_DATA12	PINT4	—
PGCR2	PG11	D27	LCD_DATA11	PINT3	TIOC3D
	PG10	D26	LCD_DATA10	PINT2	TIOC3C
	PG9	D25	LCD_DATA9	PINT1	TIOC3B
	PG8	D24	LCD_DATA8	PINT0	TIOC3A
PGCR1	PG7	D23	LCD_DATA7	IRQ7	TIOC2B
	PG6	D22	LCD_DATA6	IRQ6	TIOC2A
	PG5	D21	LCD_DATA5	IRQ5	TIOC1B
	PG4	D20	LCD_DATA4	IRQ4	TIOC1A
PGCR0	PG3	D19	LCD_DATA3	IRQ3	TIOC0D
	PG2	D18	LCD_DATA2	IRQ2	TIOC0C
	PG1	D17	LCD_DATA1	IRQ1	TIOC0B
	PG0	D16	LCD_DATA0	IRQ0	TIOC0A

chanhvinh.com

Table 48.9 Multiplexed Pins (Port H)

	Setting Mode Bits (PHnMD[1:0])			
	00	01	10	11
Setting Register	Function 1	Function 2	Function 3	Function 4
PHCR1	PH7	AN7	PINT7	—
	PH6	AN6	PINT6	—
	PH5	AN5	PINT5	LCD_EXTCLK
	PH4	AN4	PINT4	—
PHCR0	PH3	AN3	PINT3	—
	PH2	AN2	PINT2	—
	PH1	AN1	PINT1	—
	PH0	AN0	PINT0	—

Table 48.10 Multiplexed Pins (Port J: Available Only in the SH7269 Group)

	Setting Mode Bits (PJnMD[2:0])						
	000	001	010	011	100	101	110
Setting Register	Function 1	Function 2	Function 3	Function 4	Function 5	Function 6	Function 7
PJCR7	PJ31	DV_CLK	—	—	—	—	—
	PJ30	—	SSIDATA5	—	TIOC2B	IETxD	—
	PJ29	—	SSIWS5	—	TIOC2A	IERxD	—
	PJ28	—	SSISCK5	—	TIOC1B	$\overline{\text{RTS7}}$	—
PJCR6	PJ27	SGOUT_3	—	—	TIOC1A	$\overline{\text{CTS7}}$	—
	PJ26	SGOUT_2	SSIDATA4	LCD_TCON5	—	TxD7	—
	PJ25	SGOUT_1	SSIWS4	LCD_TCON4	SPDIF_OUT	RxD7	—
	PJ24	SGOUT_0	SSISCK4	LCD_TCON3	SPDIF_IN	SCK7	—
PJCR5	PJ23	DV_DATA23	LCD_DATA23	LCD_TCON6	IRQ3	CTx1	CTx0&CTx1
	PJ22	DV_DATA22	LCD_DATA22	LCD_TCON5	IRQ2	CRx1	CRx0/CRx1
	PJ21	DV_DATA21	LCD_DATA21	LCD_TCON4	IRQ1	CTx2	CTx0&CTx1&CTx2
	PJ20	DV_DATA20	LCD_DATA20	LCD_TCON3	IRQ0	CRx2	CRx0/CRx1/CRx2

chanhvinh.com

Setting Register	Setting Mode Bits (PJnMD[2:0])						
	000	001	010	011	100	101	110
	Function 1	Function 2	Function 3	Function 4	Function 5	Function 6	Function 7
PJCR4	PJ19	DV_DATA19	LCD_DATA19	MISO0	TIOC0D	SIOFRxD	AUDIO_XOUT
	PJ18	DV_DATA18	LCD_DATA18	MOSI0	TIOC0C	SIOFTxD	—
	PJ17	DV_DATA17	LCD_DATA17	SSL00	TIOC0B	SIOFSYNC	—
	PJ16	DV_DATA16	LCD_DATA16	RSPCK0	TIOC0A	SIOFSCK	—
PJCR3	PJ15	DV_DATA15	LCD_DATA15	PINT7	PWM2H	TxD7	—
	PJ14	DV_DATA14	LCD_DATA14	PINT6	PWM2G	TxD6	—
	PJ13	DV_DATA13	LCD_DATA13	PINT5	PWM2F	TxD5	—
	PJ12	DV_DATA12	LCD_DATA12	PINT4	PWM2E	SCK7	—
PJCR2	PJ11	DV_DATA11	LCD_DATA11	PINT3	PWM2D	SCK6	—
	PJ10	DV_DATA10	LCD_DATA10	PINT2	PWM2C	SCK5	—
	PJ9	DV_DATA9	LCD_DATA9	PINT1	PWM2B	$\overline{\text{RTS5}}$	—
	PJ8	DV_DATA8	LCD_DATA8	PINT0	PWM2A	$\overline{\text{CTS5}}$	—
PJCR1	PJ7	DV_DATA7	LCD_DATA7	SD_D2_1	PWM1H	—	—
	PJ6	DV_DATA6	LCD_DATA6	SD_D3_1	PWM1G	—	—
	PJ5	DV_DATA5	LCD_DATA5	SD_CMD_1	PWM1F	—	—
	PJ4	DV_DATA4	LCD_DATA4	SD_CLK_1	PWM1E	—	—
PJCR0	PJ3	DV_DATA3	LCD_DATA3	SD_D0_1	PWM1D	—	—
	PJ2	DV_DATA2	LCD_DATA2	SD_D1_1	PWM1C	—	—
	PJ1	DV_DATA1	LCD_DATA1	SD_WP_1	PWM1B	—	—
	PJ0	DV_DATA0	LCD_DATA0	SD_CD_1	PWM1A	—	—

chanhvinh.com

48.2 Register Descriptions

Table 48.11 lists the register configuration.

Table 48.11 Register Configuration

Port	Register Name	Abbreviation	R/W	Intial Value	Address	Access Size
A	Port A I/O register 0	PAIOR0	R/W	H'0000	H'FFFE3812	8, 16*2
	Port A data register 0	PADR0	R/W	H'0000	H'FFFE3816	8, 16*2
	Port A port register 0	PAPR0	R	H'xxxx	H'FFFE381A	8, 16
B	Port B control register 5	PBCR5	R/W	H'0000/H'0001*1	H'FFFE3824	8, 16, 32
	Port B control register 4	PBCR4	R/W	H'0000/H'1111*1	H'FFFE3826	8, 16
	Port B control register 3	PBCR3	R/W	H'0000/H'1111*1	H'FFFE3828	8, 16, 32
	Port B control register 2	PBCR2	R/W	H'0000/H'1111*1	H'FFFE382A	8, 16
	Port B control register 1	PBCR1	R/W	H'0000/H'1111*1	H'FFFE382C	8, 16, 32
	Port B control register 0	PBCR0	R/W	H'0000/H'1110/ H'1100*1	H'FFFE382E	8, 16
	Port B I/O register 1	PBIOR1	R/W	H'0000	H'FFFE3830	8, 16, 32
	Port B I/O register 0	PBIOR0	R/W	H'0000	H'FFFE3832	8, 16
	Port B data register 1	PBDR1	R/W	H'0000	H'FFFE3834	8, 16, 32
	Port B data register 0	PBDR0	R/W	H'0000	H'FFFE3836	8, 16
	Port B port register 1	PBPR1	R	H'xxxx	H'FFFE3838	8, 16, 32
	Port B port register 0	PBPR0	R	H'xxxx	H'FFFE383A	8, 16
C	Port C control register 2	PCCR2	R/W	H'0000	H'FFFE384A	8, 16
	Port C control register 1	PCCR1	R/W	H'0000	H'FFFE384C	8, 16, 32
	Port C control register 0	PCCR0	R/W	H'0000/H'0011*1	H'FFFE384E	8, 16
	Port C I/O register 0	PCIOR0	R/W	H'0000	H'FFFE3852	8, 16
	Port C data register 0	PCDR0	R/W	H'0000	H'FFFE3856	8, 16
	Port C port register 0	PCPR0	R	H'xxxx	H'FFFE385A	8, 16

chanhvinh.com

Port	Register Name	Abbreviation	R/W	Intial Value	Address	Access Size
D	Port D control register 3	PDCR3	R/W	H'0000/H'1111*1	H'FFFE3868	8, 16, 32
	Port D control register 2	PDCR2	R/W	H'0000/H'1111*1	H'FFFE386A	8, 16
	Port D control register 1	PDCR1	R/W	H'0000/H'1111*1	H'FFFE386C	8, 16, 32
	Port D control register 0	PDCR0	R/W	H'0000/H'1111*1	H'FFFE386E	8, 16
	Port D I/O register 0	PDIOR0	R/W	H'0000	H'FFFE3872	8, 16
	Port D data register 0	PDDR0	R/W	H'0000	H'FFFE3876	8, 16
	Port D port register 0	PDPR0	R	H'xxxx	H'FFFE387A	8, 16
E	Port E control register 1	PECR1	R/W	H'0000	H'FFFE388C	8, 16, 32
	Port E control register 0	PECR0	R/W	H'0000	H'FFFE388E	8, 16
	Port E I/O register 0	PEIOR0	R/W	H'0000	H'FFFE3892	8, 16
	Port E data register 0	PEDR0	R/W	H'0000	H'FFFE3896	8, 16
	Port E port register 0	PEPR0	R	H'xxxx	H'FFFE389A	8, 16
F	Port F control register 6	PFCR6	R/W	H'0000	H'FFFE38A2	8, 16
	Port F control register 5	PFCR5	R/W	H'0000	H'FFFE38A4	8, 16, 32
	Port F control register 4	PFCR4	R/W	H'0000	H'FFFE38A6	8*3, 16
	Port F control register 3	PFCR3	R/W	H'0000	H'FFFE38A8	8, 16, 32
	Port F control register 2	PFCR2	R/W	H'0000	H'FFFE38AA	8, 16
	Port F control register 1	PFCR1	R/W	H'0000	H'FFFE38AC	8, 16, 32
	Port F control register 0	PFCR0	R/W	H'0000	H'FFFE38AE	8, 16
	Port F I/O register 1	PFIOR1	R/W	H'0000	H'FFFE38B0	8, 16, 32
	Port F I/O register 0	PFIOR0	R/W	H'0000	H'FFFE38B2	8, 16
	Port F data register 1	PFDR1	R/W	H'0000	H'FFFE38B4	8, 16, 32
	Port F data register 0	PFDR0	R/W	H'0000	H'FFFE38B6	8, 16
	Port F port register 1	PFPR1	R	H'xxxx	H'FFFE38B8	8, 16, 32
	Port F port register 0	PFPR0	R	H'xxxx	H'FFFE38BA	8, 16
G	Port G control register 6	PGCR6	R/W	H'0000	H'FFFE38C2	8, 16
	Port G control register 5	PGCR5	R/W	H'0000	H'FFFE38C4	8, 16, 32
	Port G control register 4	PGCR4	R/W	H'0000	H'FFFE38C6	8, 16
	Port G control register 3	PGCR3	R/W	H'0000/H'1111*1	H'FFFE38C8	8, 16, 32
	Port G control register 2	PGCR2	R/W	H'0000/H'1111*1	H'FFFE38CA	8, 16
	Port G control register 1	PGCR1	R/W	H'0000/H'1111*1	H'FFFE38CC	8, 16, 32
	Port G control register 0	PGCR0	R/W	H'0000/H'1111*1	H'FFFE38CE	8, 16

chanhvinh.com

Port	Register Name	Abbreviation	R/W	Intial Value	Address	Access Size
G	Port G I/O register 1	PGIOR1	R/W	H'0000	H'FFFE38D0	8, 16, 32
	Port G I/O register 0	PGIOR0	R/W	H'0000	H'FFFE38D2	8, 16
	Port G data register 1	PGDR1	R/W	H'0000	H'FFFE38D4	8, 16, 32
	Port G data register 0	PGDR0	R/W	H'0000	H'FFFE38D6	8, 16
	Port G port register 1	PGPR1	R	H'xxxx	H'FFFE38D8	8, 16, 32
	Port G port register 0	PGPR0	R	H'xxxx	H'FFFE38DA	8, 16
H	Port H control register 1	PHCR1	R/W	H'0000	H'FFFE38EC	8, 16, 32
	Port H control register 0	PHCR0	R/W	H'0000	H'FFFE38EE	8, 16
	Port H port register 0	PHPR0	R	H'xxxx	H'FFFE38FA	8, 16
J	Port J control register 7	PJCR7	R/W	H'0000	H'FFFE3900	8, 16, 32
	Port J control register 6	PJCR6	R/W	H'0000	H'FFFE3902	8, 16
	Port J control register 5	PJCR5	R/W	H'0000	H'FFFE3904	8, 16, 32
	Port J control register 4	PJCR4	R/W	H'0000	H'FFFE3906	8, 16
	Port J control register 3	PJCR3	R/W	H'0000	H'FFFE3908	8, 16, 32
	Port J control register 2	PJCR2	R/W	H'0000	H'FFFE390A	8, 16
	Port J control register 1	PJCR1	R/W	H'0000	H'FFFE390C	8, 16, 32
	Port J control register 0	PJCR0	R/W	H'0000	H'FFFE390E	8, 16
	Port J I/O register 1	PJIOR1	R/W	H'0000	H'FFFE3910	8, 16, 32
	Port J I/O register 0	PJIOR0	R/W	H'0000	H'FFFE3912	8, 16
	Port J data register 1	PJDR1	R/W	H'0000	H'FFFE3914	8, 16, 32
	Port J data register 0	PJDR0	R/W	H'0000	H'FFFE3916	8, 16
	Port J port register 1	PJPR1	R	H'xxxx	H'FFFE3918	8, 16, 32
	Port J port register 0	PJPR0	R	H'xxxx	H'FFFE391A	8, 16
—	Serial sound interface noise canceler control register	SNCR	R/W	H'0000	H'FFFE393E	8, 16

Notes: 1. The initial value depends on the boot mode of the LSI.
2. In 16-bit access, the register can be read but cannot be written to.
3. In 8-bit access, the register can be read but cannot be written to.

chanhvinh.com

48.2.1 Port A I/O Register 0 (PAIOR0)

PAIOR0 is a 16-bit readable/writable register that is used to set the pins on port A as inputs or outputs. The PA1IOR and PA0IOR bits correspond to the PA1 and PA0 pins, respectively. If a bit in PAIOR0 is set to 1, the corresponding pin on port A functions as output. If it is cleared to 0, the corresponding pin function as input.

Bits 15 to 9, and 7 to 1 in PAIOR0 are reserved. These bits are always read as 0. The write value should always be 0.

Bit:	15	14	13	12	11	10	9	8	7	6	5	4	3	2	1	0
	-	-	-	-	-	-	-	PA1IOR	-	-	-	-	-	-	-	PA0IOR
Initial value:	0	0	0	0	0	0	0	0	0	0	0	0	0	0	0	0
R/W:	R	R	R	R	R	R	R	R/W	R	R	R	R	R	R	R	R/W

48.2.2 Port A Data Register 0 (PADR0)

PADR0 is a 16-bit readable/writable register that stores port A data. The PA1DR and PA0DR bits correspond to the PA1 and PA0 pins, respectively.

When a pin function is general output, if a value is written to PADR0, that value is output from the pin, and if PADR0 is read, the register value is returned regardless of the pin state.

When a pin function is general input, if PADR0 is read, the pin state, not the register value, is returned directly. If a value is written to PADR0, although that value is written into PADR0, it does not affect the pin state. Table 48.12 summarizes PADR0 read/write operation.

Bit:	15	14	13	12	11	10	9	8	7	6	5	4	3	2	1	0
	-	-	-	-	-	-	-	PA1DR	-	-	-	-	-	-	-	PA0DR
Initial value:	0	0	0	0	0	0	0	0	0	0	0	0	0	0	0	0
R/W:	R	R	R	R	R	R	R	R/W	R	R	R	R	R	R	R	R/W

Bit	Bit Name	Initial Value	R/W	Description
15 to 9	—	All 0	R	Reserved These bits are always read as 0. The write value should always be 0.
8	PA1DR	0	R/W	See table 48.12.
7 to 1	—	All 0	R	Reserved These bits are always read as 0. The write value should always be 0.
0	PA0DR	0	R/W	See table 48.12.

chanhvinh.com

Table 48.12 Port A Data Register 0 (PADR0) Read/Write Operation

- Bits 8 and 0 of PADR0

PAIOR0	Pin Function	Read Operation	Write Operation
0	General input	Pin state	Can write to PADR0, but does not affect the pin state
1	General output	PADR0 value	Value written is output from the pin

48.2.3 Port A Port Register 0 (PAPR0)

PAPR0 is a 16-bit read-only register, in which the PA1PR and PA0PR bits correspond to the PA1 and PA0 pins, respectively. PAPR0 always returns the states of the pins.

Bit:	15	14	13	12	11	10	9	8	7	6	5	4	3	2	1	0
	-	-	-	-	-	-	-	-	-	-	-	-	-	-	PA1PR	PA0PR
Initial value:	0	0	0	0	0	0	0	0	0	0	0	0	0	0	PA1	PA0
R/W:	R	R	R	R	R	R	R	R	R	R	R	R	R	R	R	R

Bit	Bit Name	Initial Value	R/W	Description
15 to 2	—	All 0	R	Reserved These bits are always read as 0. The write value should always be 0.
1	PA1PR	Pin state	R	The pin state is returned. These bits cannot be modified.
0	PA0PR	Pin state	R	

chanhvinh.com

48.2.4 Port B Control Registers 0 to 5 (PBCR0 to PBCR5)

PBCR0 to PBCR5 are 16-bit readable/writable registers that are used to select the functions of the multiplexed pins on port B.

(1) Port B Control Register 5 (PBCR5)

Bit:	15	14	13	12	11	10	9	8	7	6	5	4	3	2	1	0
	-	-	-	-	-	PB22MD[2:0]			-	-	PB21MD[1:0]		-	PB20MD[2:0]		
Initial value:	0	0	0	0	0	0	0	0	0	0	0	0	0	0	0	0/1
R/W:	R	R	R	R	R	R/W	R/W	R/W	R	R	R/W	R/W	R	R/W	R/W	R/W

Bit	Bit Name	Initial Value	R/W	Description
15 to 11	—	All 0	R	Reserved These bits are always read as 0. The write value should always be 0.
10 to 8	PB22MD[2:0]	000	R/W	PB22 Mode Select the function of the PB22. 000: PB22 100: $\overline{CS4}$ 001: A22 101: Setting prohibited 010: CTx2 110: Setting prohibited 011: IETxD 111: Setting prohibited
7, 6	—	All 0	R	Reserved These bits are always read as 0. The write value should always be 0.
5, 4	PB21MD[1:0]	00	R/W	PB21 Mode Select the function of the PB21. 00: PB21 10: CRx2 01: A21 11: IERxD
3	—	0	R	Reserved This bit is always read as 0. The write value should always be 0.

chanhvinh.com

Bit	Bit Name	Initial Value	R/W	Description	
2 to 0	PB20MD[2:0]	000/001	R/W	PB20 Mode	
				Select the function of the PB20.	
				Boot modes 0, 1	Boot modes 2 to 5
				000: Setting prohibited	000: PB20 (initial value)
				001: A20 (initial value)	001: A20
				010: Setting prohibited	010: QMISO0/QIO10
				011: Setting prohibited	011: MISO0
				100: Setting prohibited	100: Setting prohibited
				101: Setting prohibited	101: Setting prohibited
				110: Setting prohibited	110: SPBMI_0/SPBIO1_0
				111: Setting prohibited	111: Setting prohibited

chanhvinh.com

(2) Port B Control Register 4 (PBCR4)

Bit:	15	14	13	12	11	10	9	8	7	6	5	4	3	2	1	0
	-	PB19MD[2:0]			-	PB18MD[2:0]			-	PB17MD[2:0]			-	PB16MD[2:0]		
Initial value:	0	0	0	0/1	0	0	0	0/1	0	0	0	0/1	0	0	0	0/1
R/W:	R	R/W	R/W	R/W	R	R/W	R/W	R/W	R	R/W	R/W	R/W	R	R/W	R/W	R/W

Bit	Bit Name	Initial Value	R/W	Description
15	—	0	R	Reserved This bit is always read as 0. The write value should always be 0.
14 to 12	PB19MD[2:0]	000/001	R/W	PB19 Mode Select the function of the PB19. Boot modes 0, 1 / Boot modes 2 to 5 000: Setting prohibited / 000: PB19 (initial value) 001: A19 (initial value) / 001: A19 010: Setting prohibited / 010: QMO_0/QIO0_0 011: Setting prohibited / 011: MOSI0 100: Setting prohibited / 100: Setting prohibited 101: Setting prohibited / 101: Setting prohibited 110: Setting prohibited / 110: SPBMO_0/SPBIO0_0 111: Setting prohibited / 111: Setting prohibited
11	—	0	R	Reserved This bit is always read as 0. The write value should always be 0.
10 to 8	PB18MD[2:0]	000/001	R/W	PB18 Mode Select the function of the PB18. Boot modes 0, 1 / Boot modes 2 to 5 000: Setting prohibited / 000: PB18 (initial value) 001: A18 (initial value) / 001: A18 010: Setting prohibited / 010: QSSL_0 011: Setting prohibited / 011: SSL00 100: Setting prohibited / 100: Setting prohibited 101: Setting prohibited / 101: Setting prohibited 110: Setting prohibited / 110: SPBSSL 111: Setting prohibited / 111: Setting prohibited

chanhvinh.com

Bit	Bit Name	Initial Value	R/W	Description
7	—	0	R	Reserved This bit is always read as 0. The write value should always be 0.
6 to 4	PB17MD[2:0]	000/001	R/W	PB17 Mode Select the function of the PB17. Boot modes 0, 1 / Boot modes 2 to 5 000: Setting prohibited / 000: PB17 (initial value) 001: A17 (initial value) / 001: A17 010: Setting prohibited / 010: QSPCLK_0 011: Setting prohibited / 011: RSPCK0 100: Setting prohibited / 100: Setting prohibited 101: Setting prohibited / 101: Setting prohibited 110: Setting prohibited / 110: SPBCLK 111: Setting prohibited / 111: Setting prohibited
3	—	0	R	Reserved This bit is always read as 0. The write value should always be 0.
2 to 0	PB16MD[2:0]	000/001	R/W	PB16 Mode Select the function of the PB16. Boot mode 1, 0 / Boot mode 2 to 5 000: Setting prohibited / 000: PB16 (initial value) 001: A16 (initial value) / 001: A16 010: Setting prohibited / 010: QIO3_0 011: Setting prohibited / 011: Setting prohibited 100: Setting prohibited / 100: Setting prohibited 101: Setting prohibited / 101: Setting prohibited 110: Setting prohibited / 110: SPBIO3_0 111: Setting prohibited / 111: Setting prohibited

chanhvinh.com

(3) Port B Control Register 3 (PBCR3)

Bit:	15	14	13	12	11	10	9	8	7	6	5	4	3	2	1	0
	-	PB15MD[2:0]			-	PB14MD[2:0]			-	PB13MD[2:0]			-	-	PB12MD[1:0]	
Initial value:	0	0	0	0/1	0	0	0	0/1	0	0	0	0/1	0	0	0	0/1
R/W:	R	R/W	R/W	R/W	R	R/W	R/W	R/W	R	R/W	R/W	R/W	R	R	R/W	R/W

Bit	Bit Name	Initial Value	R/W	Description
15	—	0	R	Reserved This bit is always read as 0. The write value should always be 0.
14 to 12	PB15MD[2:0]	000/001	R/W	PB15 Mode Select the function of the PB15. Boot modes 0, 1 — Boot modes 2 to 5 000: Setting prohibited — 000: PB15 (initial value) 001: A15 (initial value) — 001: A15 010: Setting prohibited — 010: QIO2_0 011: Setting prohibited — 011: Setting prohibited 100: Setting prohibited — 100: Setting prohibited 101: Setting prohibited — 101: Setting prohibited 110: Setting prohibited — 110: SPBIO2_0 111: Setting prohibited — 111: Setting prohibited
11	—	0	R	Reserved This bit is always read as 0. The write value should always be 0.
10 to 8	PB14MD[2:0]	000/001	R/W	PB14 Mode Select the function of the PB14. Boot modes 0, 1 — Boot modes 2 to 5 000: Setting prohibited — 000: PB14 (initial value) 001: A14 (initial value) — 001: A14 010: Setting prohibited — 010: QIO3_1 011: Setting prohibited. — 011: Setting prohibited 100: Setting prohibited — 100: Setting prohibited 101: Setting prohibited — 101: Setting prohibited 110: Setting prohibited — 110: SPBIO3_1 111: Setting prohibited — 111: Setting prohibited

chanhvinh.com

Bit	Bit Name	Initial Value	R/W	Description
7	—	0	R	Reserved This bit is always read as 0. The write value should always be 0.
6 to 4	PB13MD[2:0]	000/001	R/W	PB13 Mode Select the function of the PB13. Boot modes 0, 1 / Boot modes 2 to 5 000: Setting prohibited / 000: PB13 (initial value) 001: A13 (initial value) / 001: A13 010: Setting prohibited / 010: QIO2_1 011: Setting prohibited / 011: Setting prohibited 100: Setting prohibited / 100: Setting prohibited 101: Setting prohibited / 101: Setting prohibited 110: Setting prohibited / 110: SPBIO2_1 111: Setting prohibited / 111: Setting prohibited
3, 2	—	All 0	R	Reserved These bits are always read as 0. The write value should always be 0.
1, 0	PB12MD[1:0]	00/01	R/W	PB12 Mode Select the function of the PB12. Boot modes 0, 1 / Boot modes 2 to 5 00: Setting prohibited / 00: PB12 (initial value) 01: A12 (initial value) / 01: A12 10: Setting prohibited / 10: TIOC3D 11: Setting prohibited / 11: Setting prohibited

chanhvinh.com

(4) Port B Control Register 2 (PBCR2)

Bit:	15	14	13	12	11	10	9	8	7	6	5	4	3	2	1	0
	-	-	PB11MD[1:0]		-	-	PB10MD[1:0]		-	-	PB9MD[1:0]		-	-	PB8MD[1:0]	
Initial value:	0	0	0	0/1	0	0	0	0/1	0	0	0	0/1	0	0	0	0/1
R/W:	R	R	R/W	R/W	R	R	R/W	R/W	R	R	R/W	R/W	R	R	R/W	R/W

Bit	Bit Name	Initial Value	R/W	Description
15, 14	—	All 0	R	Reserved These bits are always read as 0. The write value should always be 0.
13, 12	PB11MD[1:0]	00/01	R/W	PB11 Mode Select the function of the PB11. Boot modes 0, 1 / Boot modes 2 to 5 00: Setting prohibited / 00: PB11 (initial value) 01: A11 (initial value) / 01: A11 10: Setting prohibited / 10: TIOC3C 11: Setting prohibited / 11: Setting prohibited
11, 10	—	All 0	R	Reserved These bits are always read as 0. The write value should always be 0.
9, 8	PB10MD[1:0]	00/01	R/W	PB10 Mode Select the function of the PB10. Boot modes 0, 1 / Boot modes 2 to 5 00: Setting prohibited / 00: PB10 (initial value) 01: A10 (initial value) / 01: A10 10: Setting prohibited / 10: TIOC3B 11: Setting prohibited / 11: Setting prohibited
7, 6	—	All 0	R	Reserved These bits are always read as 0. The write value should always be 0.

chanhvinh.com

Bit	Bit Name	Initial Value	R/W	Description
5, 4	PB9MD[1:0]	00/01	R/W	PB9 Mode Select the function of the PB9. Boot modes 0, 1 / Boot modes 2 to 5 00: Setting prohibited / 00: PB9 (initial value) 01: A9 (initial value) / 01: A9 10: Setting prohibited / 10: TIOC3A 11: Setting prohibited / 11: Setting prohibited
3, 2	—	All 0	R	Reserved These bits are always read as 0. The write value should always be 0.
1, 0	PB8MD[1:0]	00/01	R/W	PB8 Mode Select the function of the PB8. Boot modes 0, 1 / Boot modes 2 to 5 00: Setting prohibited / 00: PB8 (initial value) 01: A8 (initial value) / 01: A8 10: Setting prohibited / 10: TIOC2B 11: Setting prohibited / 11: Setting prohibited

chanhvinh.com

(5) Port B Control Register 1 (PBCR1)

Bit:	15	14	13	12	11	10	9	8	7	6	5	4	3	2	1	0
	-	-	PB7MD[1:0]		-	-	PB6MD[1:0]		-	-	PB5MD[1:0]		-	-	PB4MD[1:0]	
Initial value:	0	0	0	0/1	0	0	0	0/1	0	0	0	0/1	0	0	0	0/1
R/W:	R	R	R/W	R/W	R	R	R/W	R/W	R	R	R/W	R/W	R	R	R/W	R/W

Bit	Bit Name	Initial Value	R/W	Description
15, 14	—	All 0	R	Reserved These bits are always read as 0. The write value should always be 0.
13, 12	PB7MD[1:0]	00/01	R/W	PB7 Mode Select the function of the PB7. Boot modes 0, 1 — Boot modes 2 to 5 00: Setting prohibited — 00: PB7 (initial mode) 01: A7 (initial value) — 01: A7 10: Setting prohibited — 10: TIOC2A 11: Setting prohibited — 11: Setting prohibited
11, 10	—	All 0	R	Reserved These bits are always read as 0. The write value should always be 0.
9, 8	PB6MD[1:0]	00/01	R/W	PB6 Mode Select the function of the PB6. Boot modes 0, 1 — Boot modes 2 to 5 00: Setting prohibited — 00: PB6 (initial value) 01: A6 (initial value) — 01: A6 10: Setting prohibited — 10: TIOC1B 11: Setting prohibited — 11: Setting prohibited
7, 6	—	All 0	R	Reserved These bits are always read as 0. The write value should always be 0.

chanhvinh.com

Bit	Bit Name	Initial Value	R/W	Description
5, 4	PB5MD[1:0]	00/01	R/W	PB5 Mode Select the function of the PB5. Boot modes 0, 1 — Boot modes 2 to 5 00: Setting prohibited — 00: PB5 (initial value) 01: A5 (initial value) — 01: A5 10: Setting prohibited — 10: TIOC1A 11: Setting prohibited — 11: Setting prohibited
3, 2	—	All 0	R	Reserved These bits are always read as 0. The write value should always be 0.
1, 0	PB4MD[1:0]	00/01	R/W	PB4 Mode Select the function of the PB4. Boot modes 0, 1 — Boot modes 2 to 5 00: Setting prohibited — 00: PB4 (initial value) 01: A4 (initial value) — 01: A4 10: Setting prohibited — 10: TIOC0D 11: Setting prohibited — 11: Setting prohibited

chanhvinh.com

(6) Port B Control Register 0 (PBCR0)

Bit:	15	14	13	12	11	10	9	8	7	6	5	4	3	2	1	0
	-	-	PB3MD[1:0]		-	-	PB2MD[1:0]		-	-	PB1MD[1:0]		-	-	-	-
Initial value:	0	0	0	0/1	0	0	0	0/1	0	0	0	0/1	0	0	0	0
R/W:	R	R	R/W	R/W	R	R	R/W	R/W	R	R	R/W	R/W	R	R	R	R

Bit	Bit Name	Initial Value	R/W	Description
15, 14	—	All 0	R	Reserved These bits are always read as 0. The write value should always be 0.
13, 12	PB3MD[1:0]	00/01	R/W	PB3 Mode Select the function of the PB3. Boot modes 0, 1 / Boot modes 2 to 5 00: Setting prohibited / 00: PB3 (initial value) 01: A3 (initial value) / 01: A3 10: Setting prohibited / 10: TIOC0C 11: Setting prohibited / 11: Setting prohibited
11, 10	—	All 0	R	Reserved These bits are always read as 0. The write value should always be 0.
9, 8	PB2MD[1:0]	00/01	R/W	PB2 Mode Select the function of the PB2. Boot modes 0, 1 / Boot modes 2 to 5 00: Setting prohibited / 00: PB2 (initial value) 01: A2 (initial value) / 01: A2 10: Setting prohibited / 10: TIOC0B 11: Setting prohibited / 11: Setting prohibited
7, 6	—	All 0	R	Reserved These bits are always read as 0. The write value should always be 0.

chanhvinh.com

Bit	Bit Name	Initial Value	R/W	Description
5, 4	PB1MD[1:0]	00/01	R/W	PB1 Mode Select the function of the PB1. Boot modes 0, 1 / Boot modes 2 to 5 00: Setting prohibited / 00: PB1 (initial value) 01: A1 (initial value) / 01: A1 10: Setting prohibited / 10: TIOC0A 11: Setting prohibited / 11: Setting prohibited
3 to 0	—	All 0	R	Reserved These bits are always read as 0. The write value should always be 0.

chanhvinh.com

48.2.5 Port B I/O Registers 0, 1 (PBIOR0, PBIOR1)

PBIOR0 and PBIOR1 are 16-bit readable/writable registers that are used to set the pins on port B as inputs or outputs. The PB22IOR to PB1IOR bits correspond to the PB22 to PB1 pins, respectively. PBIOR1 and PBIOR0 are enabled when the port B pins are functioning as general-purpose I/O (PB22 to PB1) or TIOC I/O of multi-function timer pulse unit 2. In other states, they are disabled. If a bit in PBIOR1 or PBIOR0 is set to 1, the corresponding pin on port B functions as output pin. If it is cleared to 0, the corresponding pin functions as an input pin.

Bits 15 to 7 in PBIOR1 and bit 0 in PBIOR0 are reserved. These bits are always read as 0. The write value should always be 0.

(1) Port B I/O Register 1 (PBIOR1)

Bit:	15	14	13	12	11	10	9	8	7	6	5	4	3	2	1	0
	-	-	-	-	-	-	-	-	-	PB22 IOR	PB21 IOR	PB20 IOR	PB19 IOR	PB18 IOR	PB17 IOR	PB16 IOR
Initial value:	0	0	0	0	0	0	0	0	0	0	0	0	0	0	0	0
R/W:	R	R	R	R	R	R	R	R	R	R/W	R/W	R/W	R/W	R/W	R/W	R/W

(2) Port B I/O Register 0 (PBIOR0)

Bit:	15	14	13	12	11	10	9	8	7	6	5	4	3	2	1	0
	PB15 IOR	PB14 IOR	PB13 IOR	PB12 IOR	PB11 IOR	PB10 IOR	PB9 IOR	PB8 IOR	PB7 IOR	PB6 IOR	PB5 IOR	PB4 IOR	PB3 IOR	PB2 IOR	PB1 IOR	-
Initial value:	0	0	0	0	0	0	0	0	0	0	0	0	0	0	0	0
R/W:	R/W	R/W	R/W	R/W	R/W	R/W	R/W	R/W	R/W	R/W	R/W	R/W	R/W	R/W	R/W	R

chanhvinh.com

48.2.6 Port B Data Registers 0, 1 (PBDR0, PBDR1)

PBDR0 and PBDR1 are 16-bit readable/writable registers that store port B data. The PB22DR to PB1DR bits correspond to the PB22 to PB1 pins, respectively.

When a pin function is general output, if a value is written to PBDR1 or PBDR0, the value is output directly from the pin, and if PBDR is read, the register value is returned directly regardless of the pin state.

When a pin function is general input, if PBDR1 or PBDR0 is read, the pin state, not the register value, is returned directly. If a value is written to PBDR1 or PBDR0, although that value is written into PBDR1 or PBDR0, it does not affect the pin state. Table 48.13 summarizes PBDR1/PBDR0 read/write operation.

(1) Port B Data Register 1 (PBDR1)

Bit:	15	14	13	12	11	10	9	8	7	6	5	4	3	2	1	0
	-	-	-	-	-	-	-	-	-	PB22 DR	PB21 DR	PB20 DR	PB19 DR	PB18 DR	PB17 DR	PB16 DR
Initial value:	0	0	0	0	0	0	0	0	0	0	0	0	0	0	0	0
R/W:	R	R	R	R	R	R	R	R	R	R/W	R/W	R/W	R/W	R/W	R/W	R/W

Bit	Bit Name	Initial Value	R/W	Description
15 to 7	—	All 0	R	Reserved These bits are always read as 0. The write value should always be 0.
6	PB22DR	0	R/W	See table 48.13
5	PB21DR	0	R/W	
4	PB20DR	0	R/W	
3	PB19DR	0	R/W	
2	PB18DR	0	R/W	
1	PB17DR	0	R/W	
0	PB16DR	0	R/W	

chanhvinh.com

(2) Port B Data Register 0 (PBDR0)

Bit:	15	14	13	12	11	10	9	8	7	6	5	4	3	2	1	0
	PB15 DR	PB14 DR	PB13 DR	PB12 DR	PB11 DR	PB10 DR	PB9 DR	PB8 DR	PB7 DR	PB6 DR	PB5 DR	PB4 DR	PB3 DR	PB2 DR	PB1 DR	-
Initial value:	0	0	0	0	0	0	0	0	0	0	0	0	0	0	0	0
R/W:	R/W	R/W	R/W	R/W	R/W	R/W	R/W	R/W	R/W	R/W	R/W	R/W	R/W	R/W	R/W	R

Bit	Bit Name	Initial Value	R/W	Description
15	PB15DR	0	R/W	See table 48.13
14	PB14DR	0	R/W	
13	PB13DR	0	R/W	
12	PB12DR	0	R/W	
11	PB11DR	0	R/W	
10	PB10DR	0	R/W	
9	PB9DR	0	R/W	
8	PB8DR	0	R/W	
7	PB7DR	0	R/W	
6	PB6DR	0	R/W	
5	PB5DR	0	R/W	
4	PB4DR	0	R/W	
3	PB3DR	0	R/W	
2	PB2DR	0	R/W	
1	PB1DR	0	R/W	
0	—	0	R	Reserved This bit is always read as 0. The write value should always be 0.

chanhvinh.com

Table 48.13 Port B Data Registers 1, 0 (PBDR1, PBDR0) Read/Write Operation

- Bits 6 to 0 of PBDR1 and Bits 15 to 1 of PBDR0

PBIOR1, 0	Pin Function	Read Operation	Write Operation
0	General input	Pin state	Can write to PBDR0/PBDR1, but it has no effect on the pin state.
	Other than general input	Pin state	Can write to PBDR0/PBDR1, but it has no effect on the pin state.
1	General output	PBDR0/PBDR1 value	Value written is output to the pin
	Other than general output	PBDR0/PBDR1 value	Can write to PBDR0/PBDR1, but it has no effect on the pin state.

48.2.7 Port B Port Registers 0, 1 (PBPR0, PBPR1)

PBPR (PBPR0, PBPR1) is 16-bit read-only register, in which the PB22PR to PB1PR bits correspond to the PB22 to PB1 pins, respectively. PBPR always returns the states of the pins regardless of the PBCR5 to PBCR0 settings.

(1) Port B Port Register 1 (PBPR1)

Bit:	15	14	13	12	11	10	9	8	7	6	5	4	3	2	1	0
	-	-	-	-	-	-	-	-	-	PB22 PR	PB21 PR	PB20 PR	PB19 PR	PB18 PR	PB17 PR	PB16 PR
Initial value:	0	0	0	0	0	0	0	0	0	PB22	PB21	PB20	PB19	PB18	PB17	PB16
R/W:	R	R	R	R	R	R	R	R	R	R	R	R	R	R	R	R

Bit	Bit Name	Initial Value	R/W	Description
15 to 7	—	All 0	R	Reserved These bits are always read as 0. The write value should always be 0.
6	PB22PR	Pin state	R	The pin state is returned. These bits cannot be modified.
5	PB21PR	Pin state	R	
4	PB20PR	Pin state	R	
3	PB19PR	Pin state	R	
2	PB18PR	Pin state	R	
1	PB17PR	Pin state	R	
0	PB16PR	Pin state	R	

chanhvinh.com

(2) Port B Port Register 0 (PBPR0)

Bit:	15	14	13	12	11	10	9	8	7	6	5	4	3	2	1	0
	PB15 PR	PB14 PR	PB13 PR	PB12 PR	PB11 PR	PB10 PR	PB9 PR	PB8 PR	PB7 PR	PB6 PR	PB5 PR	PB4 PR	PB3 PR	PB2 PR	PB1 PR	-
Initial value:	PB15	PB14	PB13	PB12	PB11	PB10	PB9	PB8	PB7	PB6	PB5	PB4	PB3	PB2	PB1	0
R/W:	R	R	R	R	R	R	R	R	R	R	R	R	R	R	R	R

Bit	Bit Name	Initial Value	R/W	Description
15	PB15PR	Pin state	R	The pin state is returned. These bits cannot be modified.
14	PB14PR	Pin state	R	
13	PB13PR	Pin state	R	
12	PB12PR	Pin state	R	
11	PB11PR	Pin state	R	
10	PB10PR	Pin state	R	
9	PB9PR	Pin state	R	
8	PB8PR	Pin state	R	
7	PB7PR	Pin state	R	
6	PB6PR	Pin state	R	
5	PB5PR	Pin state	R	
4	PB4PR	Pin state	R	
3	PB3PR	Pin state	R	
2	PB2PR	Pin state	R	
1	PB1PR	Pin state	R	
0	—	0	R	Reserved This bit is always read as 0. The write value should always be 0.

chanhvinh.com

48.2.8 Port C Control Registers 0 to 2 (PCCR0 to PCCR2)

PCCR0 to PCCR2 are 16-bit readable/writable registers that are used to select the functions of the multiplexed pins on port C.

(1) Port C Control Register 2 (PCCR2)

Bit:	15	14	13	12	11	10	9	8	7	6	5	4	3	2	1	0
	-	-	-	-	-	-	-	-	-	-	-	-	-	PC8MD[2:0]		
Initial value:	0	0	0	0	0	0	0	0	0	0	0	0	0	0	0	0
R/W:	R	R	R	R	R	R	R	R	R	R	R	R	R	R/W	R/W	R/W

Bit	Bit Name	Initial Value	R/W	Description
15 to 3	—	All 0	R	Reserved These bits are always read as 0. The write value should always be 0.
2 to 0	PC8MD[2:0]	000	R/W	PC8 Mode Select the function of the PC8. 000: PC8 100:CTx0&CTx1 001: $\overline{CS3}$ 101: Setting prohibited 010: TxD7 110: Setting prohibited 011: CTx1 111: Setting prohibited

chanhvinh.com

(2) Port C Control Register 1 (PCCR1)

Bit:	15	14	13	12	11	10	9	8	7	6	5	4	3	2	1	0
	-	PC7MD[2:0]			-	PC6MD[2:0]			-	PC5MD[2:0]			-	-	PC4MD[1:0]	
Initial value:	0	0	0	0	0	0	0	0	0	0	0	0	0	0	0	0
R/W:	R	R/W	R/W	R/W	R	R/W	R/W	R/W	R	R/W	R/W	R/W	R	R	R/W	R/W

Bit	Bit Name	Initial Value	R/W	Description
15	—	0	R	Reserved This bit is always read as 0. The write value should always be 0.
14 to 12	PC7MD[2:0]	000	R/W	PC7 Mode Select the function of the PC7. 000: PC7 001: CKE 010: RxD7 011: CRx1 100: CRx0/CRx1 101: IRQ1 110: Setting prohibited 111: Setting prohibited
11	—	0	R	Reserved This bit is always read as 0. The write value should always be 0.
10 to 8	PC6MD[2:0]	000	R/W	PC6 Mode Select the function of the PC6. 000: PC6 001: $\overline{\text{CAS}}$ 010: SCK7 011: CTx0 100: CTx0&CTx1& CTx2 101: Setting prohibited 110: Setting prohibited 111: Setting prohibited
7	—	0	R	Reserved This bit is always read as 0. The write value should always be 0.
6 to 4	PC5MD[2:0]	000	R/W	PC5 Mode Select the function of the PC5. 000: PC5 001: $\overline{\text{RAS}}$ 010: Setting prohibited 011: CRx0 100: CTx0/CTx1/CTx2 101: IRQ0 110: Setting prohibited 111: Setting prohibited

chanhvinh.com

Bit	Bit Name	Initial Value	R/W	Description
3, 2	—	All 0	R	Reserved These bits are always read as 0. The write value should always be 0.
1, 0	PC4MD[1:0]	00	R/W	PC4 Mode Select the function of the PC4. 0: PC4 10: TxD6 1: $\overline{WE1}$/DQMLU/$\overline{WE}$ 11: Setting prohibited

(3) Port C Control Register 0 (PCCR0)

Bit:	15	14	13	12	11	10	9	8	7	6	5	4	3	2	1	0
	-	-	PC3MD[1:0]		-	-	PC2MD[1:0]		-	-	-	PC1MD	-	-	-	PC0MD
Initial value:	0	0	0	0	0	0	0	0	0	0	0	0/1	0	0	0	0/1
R/W:	R	R	R/W	R/W	R	R	R/W	R/W	R	R	R	R/W	R	R	R	R/W

Bit	Bit Name	Initial Value	R/W	Description
15, 14	—	All 0	R	Reserved These bits are always read as 0. The write value should always be 0.
13, 12	PC3MD[1:0]	00	R/W	PC3 Mode Select the function of the PC3. 00: PC3 10: RxD6 01: $\overline{WE0}$/DQMLL 11: Setting prohibited
11, 10	—	All 0	R	Reserved These bits are always read as 0. The write value should always be 0.
9, 8	PC2MD[1:0]	00	R/W	PC2 Mode Select the function of the PC2. 00: PC2 10: SCK6 01: RD/$\overline{WR}$ 11: Setting prohibited
7 to 5	—	All 0	R	Reserved These bits are always read as 0. The write value should always be 0.

chanhvinh.com

Bit	Bit Name	Initial Value	R/W	Description
4	PC1MD	0/1	R/W	PC1 Mode Selects the function of the PC1. Boot modes 0, 1: 0: Setting prohibited; 1: $\overline{RD}$ (initial value) Boot modes 2 to 5: 0: PC1 (initial value); 01: $\overline{RD}$
3 to 1	—	All 0	R	Reserved These bits are always read as 0. The write value should always be 0.
0	PC0MD	0/1	R/W	PC0 Mode Selects the function of the PC0. Boot modes 0, 1: 0: Setting prohibited; 1: $\overline{CS0}$ (initial value) Boot modes 2 to 5: 0: PC0 (initial value); 1: $\overline{CS0}$

48.2.9 Port C I/O Register 0 (PCIOR0)

PCIOR0 is a 16-bit readable/writable register that is used to set the pins on port C as inputs or outputs. The PC8IOR to PC0IOR bits correspond to the PC8 to PC0 pins, respectively. PCIOR0 is enabled when the port C pins are functioning as general-purpose I/O (PC8 to PC0). In other states, PCIOR0 is disabled. If a bit in PCIOR0 is set to 1, the corresponding pin on port C functions as an output pin. If it is cleared to 0, the corresponding pin functions as an input pin.

Bits 15 to 9 in PCIOR0 are reserved. These bits are always read as 0. The write value should always be 0.

Bit:	15	14	13	12	11	10	9	8	7	6	5	4	3	2	1	0
	-	-	-	-	-	-	-	PC8IOR	PC7IOR	PC6IOR	PC5IOR	PC4IOR	PC3IOR	PC2IOR	PC1IOR	PC0IOR
Initial value:	0	0	0	0	0	0	0	0	0	0	0	0	0	0	0	0
R/W:	R	R	R	R	R	R	R	R/W	R/W	R/W	R/W	R/W	R/W	R/W	R/W	R/W

chanhvinh.com

48.2.10 Port C Data Register 0 (PCDR0)

PCDR0 is a 16-bit readable/writable register that stores port C data. The PC8DR to PC0DR bits correspond to the PC8 to PC0 pins, respectively.

When a pin function is general output, if a value is written to PCDR0, that value is output directly from the pin, and if PCDR0 is read, the register value is returned directly regardless of the pin state.

When a pin function is general input, if PCDR0 is read, the pin state, not the register value, is returned directly. If a value is written to PCDR0, although that value is written into PCDR0, it does not affect the pin state. Table 48.14 summarizes PCDR0 read/write operation.

Bit:	15	14	13	12	11	10	9	8	7	6	5	4	3	2	1	0
	-	-	-	-	-	-	-	PC8DR	PC7DR	PC6DR	PC5DR	PC4DR	PC3DR	PC2DR	PC1DR	PC0DR
Initial value:	0	0	0	0	0	0	0	0	0	0	0	0	0	0	0	0
R/W:	R	R	R	R	R	R	R	R/W	R/W	R/W	R/W	R/W	R/W	R/W	R/W	R/W

Bit	Bit Name	Initial Value	R/W	Description
15 to 9	—	All 0	R	Reserved These bits are always read as 0. The write value should always be 0.
8	PC8DR	0	R/W	See table 48.14
7	PC7DR	0	R/W	
6	PC6DR	0	R/W	
5	PC5DR	0	R/W	
4	PC4DR	0	R/W	
3	PC3DR	0	R/W	
2	PC2DR	0	R/W	
1	PC1DR	0	R/W	
0	PC0DR	0	R/W	

chanhvinh.com

Table 48.14 Port C Data Register 0 (PCDR0) Read/Write Operation

- Bits 8 to 0 of PCDR0

PCIOR0	Pin Function	Read Operation	Write Operation
0	General input	Pin state	Can write to PCDR0, but it has no effect on the pin state.
	Other than general input	Pin state	Can write to PCDR0, but it has no effect on the pin state.
1	General output	PCDR0 value	Value written is output from pin
	Other than general output	PCDR0 value	Can write to PCDR0, but it has no effect on the pin state

48.2.11 Port C Port Register 0 (PCPR0)

PCPR0 is a 16-bit read-only register, in which the PC8PR to PC0PR bits correspond to the PC8 to PC0 pins, respectively. PCPR0 always returns the states of the pins regardless of the PCCR0 to PCCR2 settings.

Bit:	15	14	13	12	11	10	9	8	7	6	5	4	3	2	1	0
	-	-	-	-	-	-	-	PC8PR	PC7PR	PC6PR	PC5PR	PC4PR	PC3PR	PC2PR	PC1PR	PC0PR
Initial value:	0	0	0	0	0	0	0	PC8	PC7	PC6	PC5	PC4	PC3	PC2	PC1	PC0
R/W:	R	R	R	R	R	R	R	R	R	R	R	R	R	R	R	R

Bit	Bit Name	Initial Value	R/W	Description
15 to 9	—	All 0	R	Reserved These bits are always read as 0. The write value should always be 0.
8	PC8PR	Pin state	R	The pin state is returned. These bits cannot be modified.
7	PC7PR	Pin state	R	
6	PC6PR	Pin state	R	
5	PC5PR	Pin state	R	
4	PC4PR	Pin state	R	
3	PC3PR	Pin state	R	
2	PC2PR	Pin state	R	
1	PC1PR	Pin state	R	
0	PC0PR	Pin state	R	

chanhvinh.com

48.2.12 Port D Control Register 0 to 3 (PDCR0 to PDCR3)

PDCR0 to PDCR3 are 16-bit readable/writable registers that are used to select the functions of the multiplexed pins on port D.

(1) Port D Control Register 3 (PDCR3)

Bit:	15	14	13	12	11	10	9	8	7	6	5	4	3	2	1	0
	-	-	PD15MD[1:0]		-	-	PD14MD[1:0]		-	-	PD13MD[1:0]		-	-	PD12MD[1:0]	
Initial value:	0	0	0	0/1	0	0	0	0/1	0	0	0	0/1	0	0	0	0/1
R/W:	R	R	R/W	R/W	R	R	R/W	R/W	R	R	R/W	R/W	R	R	R/W	R/W

Bit	Bit Name	Initial Value	R/W	Description
15, 14	—	All 0	R	Reserved These bits are always read as 0. The write value should always be 0.
13, 12	PD15MD[1:0]	00/01	R/W	PD15 Mode Select the function of the PD15. Boot modes 0, 1 00: Setting prohibited 01: D15/NAF7 (initial value) 10: Setting prohibited 11: Setting prohibited Boot modes 2 to 5 00: PD15 (initial value) 01: D15/NAF7 10: PWM2H 11: Setting prohibited
11, 10	—	All 0	R	Reserved These bits are always read as 0. The write value should always be 0.
9, 8	PD14MD[1:0]	00/01	R/W	PD14 Mode Select the function of the PD14. Boot modes 0, 1 00: Setting prohibited 01: D14/NAF6 (initial value) 10: Setting prohibited 11: Setting prohibited Boot modes 2 to 5 00: PD14 (initial value) 01: D14/NAF6 10: PWM2G 11: Setting prohibited

chanhvinh.com

Bit	Bit Name	Initial Value	R/W	Description
7, 6	—	All 0	R	Reserved These bits are always read as 0. The write value should always be 0.
5, 4	PD13MD[1:0]	00/01	R/W	PD13 Mode Select the function of the PD13. Boot mode 2 to 5 / Boot mode 2 to 5 00: PD13 (initial value) / 00: PD15 (initial value) 01: D13/NAF5 / 01: D15/NAF7 10: PWM2F / 10: PWM2H 11: Setting prohibited / 11: Setting prohibited
3, 2	—	All 0	R	Reserved These bits are always read as 0. The write value should always be 0.
1, 0	PD12MD[1:0]	00/01	R/W	PD12 Mode Select the function of the PD12. Boot mode 2 to 5 / Boot mode 2 to 5 00: PD12 (initial value) / 00: PD14 (initial value) 01: D12/NAF4 / 01: D14/NAF6 10: PWM2E / 10: PWM2G 11: Setting prohibited / 11: Setting prohibited

(2) Port D Control Register 2 (PDCR2)

Bit:	15	14	13	12	11	10	9	8	7	6	5	4	3	2	1	0
	-	-	PD11MD[1:0]		-	-	PD10MD[1:0]		-	-	PD9MD[1:0]		-	-	PD8MD[1:0]	
Initial value:	0	0	0	0/1	0	0	0	0/1	0	0	0	0/1	0	0	0	0/1
R/W:	R	R	R/W	R/W	R	R	R/W	R/W	R	R	R/W	R/W	R	R	R/W	R/W

Bit	Bit Name	Initial Value	R/W	Description
15, 14	—	All 0	R	Reserved These bits are always read as 0. The write value should always be 0.

chanhvinh.com

Bit	Bit Name	Initial Value	R/W	Description
13, 12	PD11MD[1:0]	00/01	R/W	PD11 Mode Select the function of the PD11. Boot modes 0, 1 00: Setting prohibited 01: D11/NAF3 (initial value) 10: Setting prohibited 11: Setting prohibited Boot modes 2 to 5 00: PD11 (initial value) 01: D11/NAF3 10: PWM2D 11: Setting prohibited
11, 10	—	All 0	R	Reserved These bits are always read as 0. The write value should always be 0.
9, 8	PD10MD[1:0]	00/01	R/W	PD10 Mode Select the function of the PD10. Boot modes 0, 1 00: Setting prohibited 01: D10/NAF2 (initial value) 10: Setting prohibited 11: Setting prohibited Boot modes 2 to 5 00: PD10 (initial value) 01: D10/NAF2 10: PWM2C 11: Setting prohibited
7, 6	—	All 0	R	Reserved These bits are always read as 0. The write value should always be 0.
5, 4	PD9MD[1:0]	00/01	R/W	PD9 Mode Select the function of the PD9. Boot modes 0, 1 00: Setting prohibited 01: D9/NAF1 (initial value) 10: Setting prohibited 11: Setting prohibited Boot modes 2 to 5 00: PD9 (initial value) 01: D10/NAF1 10: PWM2B 11: Setting prohibited
3, 2	—	All 0	R	Reserved These bits are always read as 0. The write value should always be 0.

chanhvinh.com

Bit	Bit Name	Initial Value	R/W	Description
1, 0	PD8MD[1:0]	00/01	R/W	PD8 Mode Select the function of the PD8. Boot modes 0, 1 — Boot modes 2 to 5 00: Setting prohibited — 00: PD8 (initial value) 01: D8/NAF0 (initial value) — 01: D8/NAF0 10: Setting prohibited — 10: PWM2A 11: Setting prohibited — 11: Setting prohibited

(3) Port D Control Register 1 (PDCR1)

Bit:	15	14	13	12	11	10	9	8	7	6	5	4	3	2	1	0
	-	-	PD7MD[1:0]		-	-	PD6MD[1:0]		-	-	PD5MD[1:0]		-	-	PD4MD[1:0]	
Initial value:	0	0	0	0/1	0	0	0	0/1	0	0	0	0/1	0	0	0	0/1
R/W:	R	R	R/W	R/W	R	R	R/W	R/W	R	R	R/W	R/W	R	R	R/W	R/W

Bit	Bit Name	Initial Value	R/W	Description
15, 14	—	All 0	R	Reserved These bits are always read as 0. The write value should always be 0.
13, 12	PD7MD[1:0]	00/01	R/W	PD7 Mode Select the function of the PD7. Boot modes 0, 1 — Boot modes 2 to 5 00: Setting prohibited — 00: PD7 (initial value) 01: D7/$\overline{\text{FWE}}$ (initial value) — 01: D7/$\overline{\text{FWE}}$ 10: Setting prohibited — 10: PWM1H 11: Setting prohibited — 11: Setting prohibited
11, 10	—	All 0	R	Reserved These bits are always read as 0. The write value should always be 0.

chanhvinh.com

Bit	Bit Name	Initial Value	R/W	Description
9, 8	PD6MD[1:0]	00/01	R/W	PD6 Mode Select the function of the PD6. Boot modes 0, 1 00: Setting prohibited 01: D6/FALE (initial value) 10: Setting prohibited 11: Setting prohibited Boot modes 2 to 5 00: PD6 (initial value) 01: D6/FALE 10: PWM1G 11: Setting prohibited
7, 6	—	All 0	R	Reserved These bits are always read as 0. The write value should always be 0.
5, 4	PD5MD[1:0]	00/01	R/W	PD5 Mode Select the function of the PD5. Boot modes 0, 1 00: Setting prohibited 01: D5/FCLE (initial value) 10: Setting prohibited 11: Setting prohibited Boot modes 2 to 5 00: PD5 (initial value) 01: D5/FCLE 10: PWM1F 11: Setting prohibited
3, 2	—	All 0	R	Reserved These bits are always read as 0. The write value should always be 0.
1, 0	PD4MD[1:0]	00/01	R/W	PD4 Mode Select the function of the PD4. Boot modes 0, 1 00: Setting prohibited 01: D4/$\overline{\text{FRE}}$ (initial value) 10: Setting prohibited 11: Setting prohibited Boot modes 2 to 5 00: PD4 (initial value) 01: D4/$\overline{\text{FRE}}$ 10: PWM1E 11: Setting prohibited

chanhvinh.com

(4) Port D Control Register 0 (PDCR0)

Bit:	15	14	13	12	11	10	9	8	7	6	5	4	3	2	1	0
	-	-	PD3MD[1:0]		-	-	PD2MD[1:0]		-	-	PD1MD[1:0]		-	-	PD0MD[1:0]	
Initial value:	0	0	0	0/1	0	0	0	0/1	0	0	0	0/1	0	0	0	0/1
R/W:	R	R	R/W	R/W	R	R	R/W	R/W	R	R	R/W	R/W	R	R	R/W	R/W

Bit	Bit Name	Initial Value	R/W	Description
15, 14	—	All 0	R	Reserved These bits are always read as 0. The write value should always be 0.
13, 12	PD3MD[1:0]	00/01	R/W	PD3 Mode Select the function of the PD3. Boot modes 0, 1 — Boot modes 2 to 5 00: Setting prohibited — 00: PD3 (initial value) 01: D3 (initial value) — 01: D3 10: Setting prohibited — 10: PWM1D 11: Setting prohibited — 11: Setting prohibited
11, 10	—	All 0	R	Reserved These bits are always read as 0. The write value should always be 0.
9, 8	PD2MD[1:0]	00/01	R/W	PD2 Mode Select the function of the PD2. Boot modes 0, 1 — Boot modes 2 to 5 00: Setting prohibited — 00: PD2 (initial value) 01: D2 (initial value) — 01: D2 10: Setting prohibited — 10: PWM1C 11: Setting prohibited — 11: Setting prohibited
7, 6	—	All 0	R	Reserved These bits are always read as 0. The write value should always be 0.

chanhvinh.com

Bit	Bit Name	Initial Value	R/W	Description
5, 4	PD1MD[1:0]	00/01	R/W	PD1 Mode Select the function of the PD1. Boot modes 0, 1 / Boot modes 2 to 5 00: Setting prohibited / 00: PD1 (initial value) 01: D1 (initial value) / 01: D1 10: Setting prohibited / 10: PWM1B 11: Setting prohibited / 11: Setting prohibited
3, 2	—	All 0	R	Reserved These bits are always read as 0. The write value should always be 0.
1, 0	PD0MD[1:0]	00/01	R/W	PD0 Mode Select the function of the PD0. Boot modes 0, 1 / Boot modes 2 to 5 00: Setting prohibited / 00: PD0 (initial value) 01: D0 (initial value) / 01: D0 10: Setting prohibited / 10: PWM1A 11: Setting prohibited / 11: Setting prohibited

48.2.13 Port D I/O Register 0 (PDIOR0)

PDIOR0 is a 16-bit readable/writable register that is used to set the pins on port D as inputs or outputs. The PD15IOR to PD0IOR bits correspond to the PD15 to PD0 pins, respectively. The setting of PDIOR0 is valid for the pins for which general I/O function is selected and has no effect on the pins for which other function is selected. If a bit in PDIOR0 is set to 1, the corresponding pin on port D functions as an output. If it is cleared to 0, the corresponding pin functions as an input.

Bit:	15	14	13	12	11	10	9	8	7	6	5	4	3	2	1	0
	PD15 IOR	PD14 IOR	PD13 IOR	PD12 IOR	PD11 IOR	PD10 IOR	PD9 IOR	PD8 IOR	PD7 IOR	PD6 IOR	PD5 IOR	PD4 IOR	PD3 IOR	PD2 IOR	PD1 IOR	PD0 IOR
Initial value:	0	0	0	0	0	0	0	0	0	0	0	0	0	0	0	0
R/W:	R/W	R/W	R/W	R/W	R/W	R/W	R/W	R/W	R/W	R/W	R/W	R/W	R/W	R/W	R/W	R/W

chanhvinh.com

48.2.14 Port D Port Register 0 (PDDR0)

PDDR0 is a 16-bit readable/writable register that stores port D data. The PD15DR to PD0DR bits correspond to the PD15 to PD0 pins, respectively.

When a pin function is general output, if a value is written to PDDR0, that value is output directly from the pin, and if PDDR0 is read, the register value is returned directly regardless of the pin state.

When a pin function is general input, if PDDR0 is read, the pin state, not the register value, is returned directly. If a value is written to PDDR0, although that value is written into PDDR0, it does not affect the pin state. Table 48.15 summarizes PDDR0 read/write operation.

Bit:	15	14	13	12	11	10	9	8	7	6	5	4	3	2	1	0
	PD15 DR	PD14 DR	PD13 DR	PD12 DR	PD11 DR	PD10 DR	PD9 DR	PD8 DR	PD7 DR	PD6 DR	PD5 DR	PD4 DR	PD3 DR	PD2 DR	PD1 DR	PD0 DR
Initial value:	0	0	0	0	0	0	0	0	0	0	0	0	0	0	0	0
R/W:	R/W	R/W	R/W	R/W	R/W	R/W	R/W	R/W	R/W	R/W	R/W	R/W	R/W	R/W	R/W	R/W

Bit	Bit Name	Initial Value	R/W	Description
15	PD15DR	0	R/W	See table 48.15
14	PD14DR	0	R/W	
13	PD13DR	0	R/W	
12	PD12DR	0	R/W	
11	PD11DR	0	R/W	
10	PD10DR	0	R/W	
9	PD9DR	0	R/W	
8	PD8DR	0	R/W	
7	PD7DR	0	R/W	
6	PD6DR	0	R/W	
5	PD5DR	0	R/W	
4	PD4DR	0	R/W	
3	PD3DR	0	R/W	
2	PD2DR	0	R/W	
1	PD1DR	0	R/W	
0	PD0DR	0	R/W	

chanhvinh.com

Table 48.15 Port D Data Register 0 (PDDR0) Read/Write Operation

- Bits 15 to 0 of PDDR0

PCIOR0	Pin Function	Read Operation	Write Operation
0	General input	Pin state	Can write to PDDR0, but it has no effect on the pin state.
	Other than general input	Pin state	Can write to PDDR0, but it has no effect on the pin state.
1	General output	PDDR0 value	Value written is output from pin
	Other than general output	PDDR0 value	Can write to PDDR0, but it has no effect on the pin state

chanhvinh.com

48.2.15 Port D Port Register 0 (PDPR0)

PDPR0 is a 16-bit read-only register, in which the PD15PR to PD0PR bits correspond to the PD15 to PD0 pins, respectively. PDPR0 always returns the states of the pins regardless of the PDCR0 to PDCR3 settings.

Bit:	15	14	13	12	11	10	9	8	7	6	5	4	3	2	1	0
	PD15PR	PD14PR	PD13PR	PD12PR	PD11PR	PD10PR	PD9PR	PD8PR	PD7PR	PD6PR	PD5PR	PD4PR	PD3PR	PD2PR	PD1PR	PD0PR
Initial value:	PD15	PD14	PD13	PD12	PD11	PD10	PD9	PD8	PD7	PD6	PD5	PD4	PD3	PD2	PD1	PD0
R/W:	R	R	R	R	R	R	R	R	R	R	R	R	R	R	R	R

Bit	Bit Name	Initial Value	R/W	Description
15	PD15PR	Pin state	R	The pin state is returned. These bits cannot be modified.
14	PD14PR	Pin state	R	
13	PD13PR	Pin state	R	
12	PD12PR	Pin state	R	
11	PD11PR	Pin state	R	
10	PD10PR	Pin state	R	
9	PD9PR	Pin state	R	
8	PD8PR	Pin state	R	
7	PD7PR	Pin state	R	
6	PD6PR	Pin state	R	
5	PD5PR	Pin state	R	
4	PD4PR	Pin state	R	
3	PD3PR	Pin state	R	
2	PD2PR	Pin state	R	
1	PD1PR	Pin state	R	
0	PD0PR	Pin state	R	

chanhvinh.com

48.2.16 Port E Control Registers 0, 1 (PECR0, PECR1)

PECR1 and PECR0 are 16-bit readable/writable registers that are used to select the functions of the multiplexed pins on port E.

(1) Port E Control Register 1 (PECR1: Available Only in the SH7269 Group)

Bit:	15	14	13	12	11	10	9	8	7	6	5	4	3	2	1	0
	-	-	PE7MD[1:0]		-	-	PE6MD[1:0]		-	-	PE5MD[1:0]		-	-	PE4MD[1:0]	
Initial value:	0	0	0	0	0	0	0	0	0	0	0	0	0	0	0	0
R/W:	R	R	R/W	R/W	R	R	R/W	R/W	R	R	R/W	R/W	R	R	R/W	R/W

Bit	Bit Name	Initial Value	R/W	Description
15, 14	—	All 0	R	Reserved These bits are always read as 0. The write value should always be 0.
13, 12	PE7MD[1:0]	00	R/W	PE7 Mode Select the function of the PE7. 00: PE7 10: RxD7 01: SDA3 11: Setting prohibited
11, 10	—	All 0	R	Reserved These bits are always read as 0. The write value should always be 0.
9, 8	PE6MD[1:0]	00	R/W	PE6 Mode Select the function of the PE6. 00: PE6 10: RxD6 01: SCL3 11: Setting prohibited
7, 6	—	All 0	R	Reserved These bits are always read as 0. The write value should always be 0.
5, 4	PE5MD[1:0]	00	R/W	PE5 Mode Select the function of the PE5. 00: PE5 10: RxD5 01: SDA2 11: DV_HSYNC
3, 2	—	All 0	R	Reserved These bits are always read as 0. The write value should always be 0.

chanhvinh.com

Bit	Bit Name	Initial Value	R/W	Description
1, 0	PE4MD[1:0]	00	R/W	PE4 Mode Select the function of the PE4. 00: PE4 10: RxD4 01: SCL2 11: DV_VSYNC

(2) Port E Control Register 0 (PECR0)

Bit:	15	14	13	12	11	10	9	8	7	6	5	4	3	2	1	0
	-	PE3MD[2:0]			-	PE2MD[2:0]			-	PE1MD[2:0]			-	-	PE0MD[1:0]	
Initial value:	0	0	0	0	0	0	0	0	0	0	0	0	0	0	0	0
R/W:	R	R/W	R/W	R/W	R	R/W	R/W	R/W	R	R/W	R/W	R/W	R	R	R/W	R/W

Bit	Bit Name	Initial Value	R/W	Description
15	—	0	R	Reserved This bit is always read as 0. The write value should always be 0.
14 to 12	PE3MD[2:0]	000	R/W	PE3 Mode Select the function of the PE3. 000: PE3 100: DV_HSYNC 001: SDA1 101: Setting prohibited 010: TCLKD 110: Setting prohibited 011: $\overline{\text{ADTRG}}$ 111: Setting prohibited
11	—	0	R	Reserved This bit is always read as 0. The write value should always be 0.
10 to 8	PE2MD[2:0]	000	R/W	PE2 Mode Select the function of the PE2. 000: PE2 100: DV_VSYNC 001: SCL1 101: Setting prohibited 010: TCLKD 110: Setting prohibited 011: $\overline{\text{IOIS16}}$ 111: Setting prohibited
7	—	0	R	Reserved This bit is always read as 0. The write value should always be 0.

chanhvinh.com

Bit	Bit Name	Initial Value	R/W	Description
6 to 4	PE1MD[2:0]	000	R/W	PE1 Mode Select the function of the PE1. 000: PE1 100: DV_CLK 001: SDA0 101: Setting prohibited 010: TCLKB 110: Setting prohibited 011: AUDIO_CLK 111: Setting prohibited
3, 2	—	All 0	R	Reserved These bits are always read as 0. The write value should always be 0.
1, 0	PE0MD[1:0]	00	R/W	PE0 Mode Select the function of the PE0. 00: PE0 10: TCLKA 01: SCL0 11: LCD_EXTCLK

48.2.17 Port E I/O Register 0 (PEIOR0)

PEIOR0 is a 16-bit readable/writable register that is used to set the pins on port F as inputs or outputs. The PE7IOR to PE0IOR bits correspond to the PE7 to PE0 pins respectively. PEIOR0 is enabled when the port E pins are functioning as general-purpose inputs/outputs (PE7 to PE0). In other states, it is disabled. If a bit in PEIOR0 is set to 1, the corresponding pin on port E functions as an output pin. If it is cleared to 0, the corresponding pin functions as an input pin.

Bits 15 to 8 of PEIOR0 and bits 7 to 4 of PEIOR0 in the SH7268 Group are reserved. This bit is always read as 0. The write value should always be 0.

Bit:	15	14	13	12	11	10	9	8	7	6	5	4	3	2	1	0
	-	-	-	-	-	-	-	-	PE7IOR	PE6IOR	PE5IOR	PE4IOR	PE3IOR	PE2IOR	PE1IOR	PE0IOR
Initial value:	0	0	0	0	0	0	0	0	0	0	0	0	0	0	0	0
R/W:	R	R	R	R	R	R	R	R	R/W	R/W	R/W	R/W	R/W	R/W	R/W	R/W

chanhvinh.com

48.2.18 Port E Data Register 0 (PEDR0)

PEDR0 is a 16-bit readable/writable register that stores port E data. The PE7DR to PE0DR bits correspond to the PE7 to PE0 pins, respectively.

8 pins on Port E are open-drain outputs. When a pin function is general output, if 0 is written to PEDR0, 0 is output from the pin and if 1 is written to, the pin will be in the high-impedance state. If PEDR0 is read, the register value is returned directly regardless of the pin state.

When a pin function is general input, if PEDR0 is read, the pin state, not the register value, is returned directly. If a value is written to PEDR0, although that value is written into PEDR0, it does not affect the pin state. Table 48.16 summarizes PEDR0 read/write operation.

Bit:	15	14	13	12	11	10	9	8	7	6	5	4	3	2	1	0
	-	-	-	-	-	-	-	-	PE7DR	PE6DR	PE5DR	PE4DR	PE3DR	PE2DR	PE1DR	PE0DR
Initial value:	0	0	0	0	0	0	0	0	0	0	0	0	0	0	0	0
R/W:	R	R	R	R	R	R	R	R	R/W	R/W	R/W	R/W	R/W	R/W	R/W	R/W

Bit	Bit Name	Initial Value	R/W	Description
15 to 8	—	All 0	R	Reserved These bits are always read as 0. The write value should always be 0.
7	PE7DR	0	R/W	See table 48.16.
6	PE6DR	0	R/W	Bits 7 to 4 are reserved in the SH7268 Group. These bits are always read as 0. The write value should always be 0.
5	PE5DR	0	R/W	
4	PE4DR	0	R/W	
3	PE3DR	0	R/W	
2	PE2DR	0	R/W	
1	PE1DR	0	R/W	
0	PE0DR	0	R/W	

chanhvinh.com

Table 48.16 Port E Data Register 0 (PEDR0) Read/Write Operation

- Bits 7 to 0 of PEDR0

PEIOR0	Pin Operation	Read Operation	Write Operation
0	General input	Pin state	Can write to PEDR0, but it has no effect on the pin state.
	Other than general input	Pin state	Can write to PEDR0, but it has no effect on the pin state
1	General output	PEDR0 value	When PExDR = 0, 0 outputs from the pin. When PExDR = 1, the pin is in the high-impedance state.
	Other than general output	PEDR0 value	Can write to PEDR0, but it has no effect on the pin state

48.2.19 Port E Port Register 0 (PEPR0)

PEPR0 is a 16-bit read-only register, in which the PE7PR to PE0PR bits correspond to the PE7 to PE0 pins, respectively. PEPR0 always returns the states of the pins regardless of the PECR0 and PECR1 settings.

Bit:	15	14	13	12	11	10	9	8	7	6	5	4	3	2	1	0
	-	-	-	-	-	-	-	-	PE7PR	PE6PR	PE5PR	PE4PR	PE3PR	PE2PR	PE1PR	PE0PR
Initial value:	0	0	0	0	0	0	0	0	PE7	PE6	PE5	PE4	PE3	PE2	PE1	PE0
R/W:	R	R	R	R	R	R	R	R	R	R	R	R	R	R	R	R

Bit	Bit Name	Initial Value	R/W	Description
15 to 8	—	All 0	R	Reserved These bits are always read as 0. The write value should always be 0.
7	PE7PR	Pin state	R	The pin state is returned. These bits cannot be modified. Bits 7 to 4 are reserved in the SH7268 Group. These bits are always read as 0.
6	PE6PR	Pin state	R	
5	PE5PR	Pin state	R	
4	PE4PR	Pin state	R	
3	PE3PR	Pin state	R	
2	PE2PR	Pin state	R	
1	PE1PR	Pin state	R	
0	PE0PR	Pin state	R	

chanhvinh.com

48.2.20 Port F Control Registers 0 to 6 (PFCR0 to PFCR6)

PFCR0 to PFCR6 are 16-bit readable/writable registers that are used to select the functions of the multiplexed pins on port F.

(1) Port F Control Register 6 (PFCR6)

Bit:	15	14	13	12	11	10	9	8	7	6	5	4	3	2	1	0
	-	PF23MD[2:0]			-	PF22MD[2:0]			-	PF21MD[2:0]			-	PF20MD[2:0]		
Initial value:	0	0	0	0	0	0	0	0	0	0	0	0	0	0	0	0
R/W:	R	R/W	R/W	R/W	R	R/W	R/W	R/W	R	R/W	R/W	R/W	R	R/W	R/W	R/W

Bit	Bit Name	Initial Value	R/W	Description
15	—	0	R	Reserved This bit is always read as 0. The write value should always be 0.
14 to 12	PF23MD[2:0]	000	R/W	PF23 Mode Select the function of the PF23. 000: PF23 100: TxD3 001: SD_D2_0 101: MMC_D2 010: Setting prohibited 110: Setting prohibited 011: Setting prohibited 111: Setting prohibited
11	—	0	R	Reserved This bit is always read as 0. The write value should always be 0.
10 to 8	PF22MD[2:0]	000	R/W	PF22 Mode Select the function of the PF22. 000: PF22 100: RxD3 001: SD_D3_0 101: MMC_D3 010: Setting prohibited 110: Setting prohibited 011: Setting prohibited 111: Setting prohibited
7	—	0	R	Reserved This bit is always read as 0. The write value should always be 0.

chanhvinh.com

Bit	Bit Name	Initial Value	R/W	Description
6 to 4	PF21MD[2:0]	000	R/W	PF21 Mode Select the function of the PF21. 000: PF21 100: SCK3 001: SD_CMD_0 101: MMC_CMD 010: Setting prohibited 110: Setting prohibited 011: Setting prohibited 111: Setting prohibited
3	—	0	R	Reserved This bit is always read as 0. The write value should always be 0.
2 to 0	PF20MD[2:0]	000	R/W	PF20 Mode Select the function of the PF20. 000: PF20 100: Setting prohibited 001: SD_CLK_0 101: MMC_CLK 010: SSIDATA3 110: Setting prohibited 011: Setting prohibited 111: Setting prohibited

(2) Port F Control Register 5 (PFCR5)

Bit:	15	14	13	12	11	10	9	8	7	6	5	4	3	2	1	0
	-	PF19MD[2:0]			-	PF18MD[2:0]			-	PF17MD[2:0]			-	PF16MD[2:0]		
Initial value:	0	0	0	0	0	0	0	0	0	0	0	0	0	0	0	0
R/W:	R	R/W	R/W	R/W	R	R/W	R/W	R/W	R	R/W	R/W	R/W	R	R/W	R/W	R/W

Bit	Bit Name	Initial Value	R/W	Description
15	—	0	R	Reserved This bit is always read as 0. The write value should always be 0.

chanhvinh.com

Bit	Bit Name	Initial Value	R/W	Description
14 to 12	PF19MD[2:0]	000	R/W	PF19 Mode Select the function of the PF19. 000: PF19 100: IRQ7 001: SD_D0_0 101: MMC_D0 010: SSIWS3 110: Setting prohibited 011: Setting prohibited 111: Setting prohibited
11	—	0	R	Reserved This bit is always read as 0. The write value should always be 0.
10 to 8	PF18MD[2:0]	000	R/W	PF18 Mode Select the function of the PF18. 000: PF18 100: IRQ6 001: SD_D1_0 101: MMC_D1 010: SSISCK3 110: Setting prohibited 011: Setting prohibited 111: Setting prohibited
7	—	0	R	Reserved This bit is always read as 0. The write value should always be 0.
6 to 4	PF17MD[2:0]	000	R/W	PF17 Mode Select the function of the PF17. 000: PF17 100: IRQ5 001: SD_WP_0 101: Setting prohibited 010: Setting prohibited 110: Setting prohibited 011: FRB 111: Setting prohibited
3	—	0	R	Reserved This bit is always read as 0. The write value should always be 0.
2 to 0	PF16MD[2:0]	000	R/W	PF16 Mode Select the function of the PF16. 000: PF16 100: IRQ4 001: SD_CD_0 101: MMC_CD 010: Setting prohibited 110: Setting prohibited 011: $\overline{\text{FCE}}$ 111: Setting prohibited

chanhvinh.com

(3) Port F Control Register 4 (PFCR4)

Bit:	15	14	13	12	11	10	9	8	7	6	5	4	3	2	1	0
	-	-	-	-	-	-	-	-	-	-	-	-	-	PF15MD[2:0]		
Initial value:	0	0	0	0	0	0	0	0	0	0	0	0	0	0	0	0
R/W:	R	R	R	R	R	R	R	R	R	R	R	R	R	R/W	R/W	R/W

Note: Access PFCR4 in 16 bits with H'5A in bits 15 to 8; PFCR4 cannot be accessed in 8 bits.

Bit	Bit Name	Initial Value	R/W	Description
15 to 8	—	All 0	R	Reserved These bits are always read as 0. The write value should always be 0. When writing a value to PF15MD[2:0], write H'5A to these bits.
7 to 3	—	All 0	R	Reserved This bit is always read as 0. The write value should always be 0.
2 to 0	PF15MD[2:0]	000*	R/W	PF15 Mode Select the function of the PF15. 000: PF15 100: TxD2 001: A0 101: $\overline{\text{UBCTRG}}$ 010: SSIDATA2 110: Setting prohibited 011: $\overline{\text{WDTOVF}}$ 111: Setting prohibited

Note: * Not initialized by a reset triggered by WDT overflow.

chanhvinh.com

(4) Port F Control Register 3 (PFCR3)

Bit:	15	14	13	12	11	10	9	8	7	6	5	4	3	2	1	0
	-	-	-	-	-	PF14MD[2:0]			-	PF13MD[2:0]			-	PF12MD[2:0]		
Initial value:	0	0	0	0	0	0	0	0	0	0	0	0	0	0	0	0
R/W:	R	R	R	R	R	R/W	R/W	R/W	R	R/W	R/W	R/W	R	R/W	R/W	R/W

Bit	Bit Name	Initial Value	R/W	Description
15 to 11	—	All 0	R	Reserved These bits are always read as 0. The write value should always be 0.
10 to 8	PF14MD[2:0]	000	R/W	PF14 Mode Select the function of the PF14. 000: PF14 100: RxD2 001: A25 101: Setting prohibited 010: SSIWS2 110: Setting prohibited 011: Setting prohibited 111: Setting prohibited
7	—	0	R	Reserved This bit is always read as 0. The write value should always be 0.
6 to 4	PF13MD[2:0]	000	R/W	PF13 Mode Select the function of the PF13. 000: PF13 100: SCK2 001: A24 101: Setting prohibited 010: SSISCK2 110: Setting prohibited 011: Setting prohibited 111: Setting prohibited
3	—	0	R	Reserved This bit is always read as 0. The write value should always be 0.
2 to 0	PF12MD[2:0]	000	R/W	PF12 Mode Select the function of the PF12. 000: PF12 100: TxD1 001: Setting prohibited 101: MMC_D7 010: SSIDATA1 110: Setting prohibited 011: DV_DATA3 111: Setting prohibited

chanhvinh.com

(5) Port F Control Register 2 (PFCR2)

Bit:	15	14	13	12	11	10	9	8	7	6	5	4	3	2	1	0
	-	PF11MD[2:0]			-	PF10MD[2:0]			-	PF9MD[2:0]			-	PF8MD[2:0]		
Initial value:	0	0	0	0	0	0	0	0	0	0	0	0	0	0	0	0
R/W:	R	R/W	R/W	R/W	R	R/W	R/W	R/W	R	R/W	R/W	R/W	R	R/W	R/W	R/W

Bit	Bit Name	Initial Value	R/W	Description
15	—	0	R	Reserved This bit is always read as 0. The write value should always be 0.
14 to 12	PF11MD[2:0]	000	R/W	PF11 Mode Select the function of the PF11. 000: PF11 100: RxD1 001: Setting prohibited 101: MMC_D6 010: SSIWS1 110: Setting prohibited 011: DV_DATA2 111: Setting prohibited
11	—	0	R	Reserved This bit is always read as 0. The write value should always be 0.
10 to 8	PF10MD[2:0]	000	R/W	PF10 Mode Select the function of the PF10. 000: PF10 100: SCK1 001: $\overline{CS1}$ 101: MMC_D5 010: SSISCK1 110: Setting prohibited 011: DV_DATA1 111: Setting prohibited
7	—	0	R	Reserved This bit is always read as 0. The write value should always be 0.
6 to 4	PF9MD[2:0]	000	R/W	PF9 Mode Select the function of the PF9. 000: PF9 100: SCK0 001: $\overline{BS}$ 101: MMC_D4 010: Setting prohibited 110: $\overline{RTS1}$ 011: DV_DATA0 111: Setting prohibited

chanhvinh.com

Bit	Bit Name	Initial Value	R/W	Description
3	—	0	R	Reserved This bit is always read as 0. The write value should always be 0.
2 to 0	PF8MD[2:0]	000	R/W	PF8 Mode Select the function of the PF8. 000: PF8 100: TxD0 001: A23 101: Setting prohibited 010: Setting prohibited 110: Setting prohibited 011: Setting prohibited 111: Setting prohibited

(6) Port F Control Register 1 (PFCR1)

Bit:	15	14	13	12	11	10	9	8	7	6	5	4	3	2	1	0
	-	PF7MD[2:0]			-	PF6MD[2:0]			-	PF5MD[2:0]			-	PF4MD[2:0]		
Initial value:	0	0	0	0	0	0	0	0	0	0	0	0	0	0	0	0
R/W:	R	R/W	R/W	R/W	R	R/W	R/W	R/W	R	R/W	R/W	R/W	R	R/W	R/W	R/W

Bit	Bit Name	Initial Value	R/W	Description
15	—	0	R	Reserved This bit is always read as 0. The write value should always be 0.
14 to 12	PF7MD[2:0]	000	R/W	PF7 Mode Select the function of the PF7. 000: PF7 100: RxD0 001: Setting prohibited 101: SGOUT_3 010: SSIRxD0 110: $\overline{\text{CTS1}}$ 011: Setting prohibited 111: Setting prohibited
11	—	0	R	Reserved This bit is always read as 0. The write value should always be 0.

chanhvinh.com

Bit	Bit Name	Initial Value	R/W	Description
10 to 8	PF6MD[2:0]	000	R/W	PF6 Mode Select the function of the PF6. 000: PF6 100: Setting prohibited 001: $\overline{\text{CE2A}}$ 101: SGOUT_2 010: SSITxD0 110: Setting prohibited 011: Setting prohibited 111: Setting prohibited
7	—	0	R	Reserved This bit is always read as 0. The write value should always be 0.
6 to 4	PF5MD[2:0]	000	R/W	PF5 Mode Select the function of the PF5. 000: PF5 100: Setting prohibited 001: Setting prohibited 101: SGOUT_1 010: SSIWS0 110: Setting prohibited 011: Setting prohibited 111: Setting prohibited
3	—	0	R	Reserved This bit is always read as 0. The write value should always be 0.
2 to 0	PF4MD[2:0]	000	R/W	PF4 Mode Select the function of the PF4. 000: PF4 100: Setting prohibited 001: $\overline{\text{CS5}}$/$\overline{\text{CE1A}}$ 101: SGOUT_0 010: SSISCK0 110: Setting prohibited 011: Setting prohibited 111: Setting prohibited

chanhvinh.com

(7) Port F Control Register 0 (PFCR0)

Bit:	15	14	13	12	11	10	9	8	7	6	5	4	3	2	1	0
	-	PF3MD[2:0]			-	PF2MD[2:0]			-	PF1MD[2:0]			-	PF0MD[2:0]		
Initial value:	0	0	0	0	0	0	0	0	0	0	0	0	0	0	0	0
R/W:	R	R/W	R/W	R/W	R	R/W	R/W	R/W	R	R/W	R/W	R/W	R	R/W	R/W	R/W

Bit	Bit Name	Initial Value	R/W	Description
15	—	0	R	Reserved This bit is always read as 0. The write value should always be 0.
14 to 12	PF3MD[2:0]	000	R/W	PF3 Mode Select the function of the PF3. 000: PF3 100: TIOC4D 001: $\overline{\text{CS2}}$ 101: AUDIO_XOUT 010: QMI_1/QIO1_1 110: SPBMI_1/SPBIO1_1 011: MISO1 111: Setting prohibited
11	—	0	R	Reserved This bit is always read as 0. The write value should always be 0.
10 to 8	PF2MD[2:0]	000	R/W	PF2 Mode Select the function of the PF2. 000: PF2 100: TIOC4C 001: $\overline{\text{WAIT}}$ 101: TEND0 010: QMO_1/QIO0_1 110: SPBMO_1/SPBIO0_1 011: MOSI1 111: Setting prohibited
7	—	0	R	Reserved This bit is always read as 0. The write value should always be 0.
6 to 4	PF1MD[2:0]	000	R/W	PF1 Mode Select the function of the PF1. 000: PF1 100: TIOC4B 001: $\overline{\text{BACK}}$ 101: DACK0 010: QSSL_1 110: Setting prohibited 011: SSL10 111: Setting prohibited

chanhvinh.com

Bit	Bit Name	Initial Value	R/W	Description
3	—	0	R	Reserved This bit is always read as 0. The write value should always be 0.
2 to 0	PF0MD[2:0]	000	R/W	PF0 Mode Select the function of the PF0. 000: PF0 100: TIOC4A 001: $\overline{\text{BREQ}}$ 101: DREQ0 010: QSPCLK_1 110: Setting prohibited 011: RSPCK1 111: Setting prohibited

48.2.21 Port F I/O Registers 0, 1 (PFIOR0, PFIOR1)

PFIOR0 and PFIOR1 are 16-bit readable/writable registers that are used to set the pins on port F as inputs or outputs. The PF23IOR to PF0IOR bits correspond to the PF23 to PF0 pins, respectively. PFIOR0 or PFIOR1 is enabled when the port F pins are functioning as general-purpose I/O (PF23 to PF0) or TIOC I/O of multi-function timer pulse unit 2. In other states, they are disabled. If a bit in PFIOR0 or PFIOR1 is set to 1, the corresponding pin on port F functions as an output. If it is cleared to 0, the corresponding pin functions as an input.

Bits 15 to 8 in PFIOR1 are reserved. These bits are always read as 0. The write value should always be 0.

(1) Port F IO Register 1 (PFIOR1)

Bit:	15	14	13	12	11	10	9	8	7	6	5	4	3	2	1	0
	-	-	-	-	-	-	-	-	PF23 IOR	PF22 IOR	PF21 IOR	PF20 IOR	PF19 IOR	PF18 IOR	PF17 IOR	PF16 IOR
Initial value:	0	0	0	0	0	0	0	0	0	0	0	0	0	0	0	0
R/W:	R	R	R	R	R	R	R	R	R/W	R/W	R/W	R/W	R/W	R/W	R/W	R/W

(2) Port F IO Register 0 (PFIOR0)

Bit:	15	14	13	12	11	10	9	8	7	6	5	4	3	2	1	0
	PF15 IOR	PF14 IOR	PF13 IOR	PF12 IOR	PF11 IOR	PF10 IOR	PF9 IOR	PF8 IOR	PF7 IOR	PF6 IOR	PF5 IOR	PF4 IOR	PF3 IOR	PF2 IOR	PF1 IOR	PF0 IOR
Initial value:	0	0	0	0	0	0	0	0	0	0	0	0	0	0	0	0
R/W:	R/W	R/W	R/W	R/W	R/W	R/W	R/W	R/W	R/W	R/W	R/W	R/W	R/W	R/W	R/W	R/W

chanhvinh.com

48.2.22 Port F Data Registers 0, 1 (PFDR0, PFDR1)

PFDR0 and PFDR1 are 16-bit readable/writable registers that store port F data. The PF23DR to PF0DR bits correspond to the PF23 to PF pins respectively.

When a pin function is general output, if a value is written to PFDR0 or PFDR1, that value is output directly from the pin, and if PFDR0 or PFDR1 is read, the register value is returned directly regardless of the pin state.

When a pin function is general input, if PFDR0 or PFDR1 is read, the pin state, not the register value, is returned directly. If a value is written to PFDR0 or PFDR1, although that value is written into PFDR0 or PFDR1, it does not affect the pin state. Table 48.17 summarizes PFDR0/PDFR1 read/write operation.

(1) Port F Data Register 1 (PFDR1)

Bit:	15	14	13	12	11	10	9	8	7	6	5	4	3	2	1	0
	-	-	-	-	-	-	-	-	PF23DR	PF22DR	PF21DR	PF20DR	PF19DR	PF18DR	PF17DR	PF16DR
Initial value:	0	0	0	0	0	0	0	0	0	0	0	0	0	0	0	0
R/W:	R	R	R	R	R	R	R	R	R/W	R/W	R/W	R/W	R/W	R/W	R/W	R/W

Bit	Bit Name	Initial Value	R/W	Description
15 to 8	—	All 0	R	Reserved These bits are always read as 0. The write value should always be 0.
7	PF23DR	0	R/W	See table 48.17
6	PF22DR	0	R/W	
5	PF21DR	0	R/W	
4	PF20DR	0	R/W	
3	PF19DR	0	R/W	
2	PF18DR	0	R/W	
1	PF17DR	0	R/W	
0	PF16DR	0	R/W	

chanhvinh.com

(2) Port F Data Register 0 (PFDR0)

Bit:	15	14	13	12	11	10	9	8	7	6	5	4	3	2	1	0
	PF15 DR	PF14 DR	PF13 DR	PF12 DR	PF11 DR	PF10 DR	PF9 DR	PF8 DR	PF7 DR	PF6 DR	PF5 DR	PF4 DR	PF3 DR	PF2 DR	PF1 DR	PF0 DR
Initial value:	0	0	0	0	0	0	0	0	0	0	0	0	0	0	0	0
R/W:	R/W	R/W	R/W	R/W	R/W	R/W	R/W	R/W	R/W	R/W	R/W	R/W	R/W	R/W	R/W	R/W

Bit	Bit Name	Initial Value	R/W	Description
15	PF15DR	0	R/W	See table 48.17
14	PF14DR	0	R/W	
13	PF13DR	0	R/W	
12	PF12DR	0	R/W	
11	PF11DR	0	R/W	
10	PF10DR	0	R/W	
9	PF9DR	0	R/W	
8	PF8DR	0	R/W	
7	PF7DR	0	R/W	
6	PF6DR	0	R/W	
5	PF5DR	0	R/W	
4	PF4DR	0	R/W	
3	PF3DR	0	R/W	
2	PF2DR	0	R/W	
1	PF1DR	0	R/W	
0	PF0DR	0	R/W	

chanhvinh.com

Table 48.17 Port F Data Registers 0, 1 (PFDR0, PFDR1) Read/Write Operation

- Bits 23 to 0 of PFDR1 and bits 15 to 0 of PFDR0

PFIOR0	Pin Operation	Read Operation	Write Operation
0	General input	Pin state	Can write to PFDR0/PFDR1, but it has no effect on the pin state
	Other than general input	Pin state	Can write to PFDR0/PFDR1, but it has no effect on the pin state
1	General output	PFDR0 value	Value written is output from pin
	Other than general output	PFDR0 value	Can write to PFDR0/PFDR1, but it has no effect on the pin state

48.2.23 Port F Port Registers 0, 1 (PFPR0, PFPR1)

PFPR0 and PFPR1 are 16-bit read-only registers, in which PF23PR to PF0PR bits correspond to the PF23 to PF0 pins, respectively. PFPR0 or PFPR1 always returns the states of the pins regardless of the PFCR0 to PFCR5 settings.

(1) Port F Port Register 1 (PFPR1)

Bit:	15	14	13	12	11	10	9	8	7	6	5	4	3	2	1	0
	-	-	-	-	-	-	-	-	PF23 PR	P226 PR	PF21 PR	PF20 PR	PF19 PR	PF18 PR	PF17 PR	PF16 PR
Initial value:	0	0	0	0	0	0	0	0	PF23	PF22	PF21	PF20	PF19	PF18	PF17	PF16
R/W:	R	R	R	R	R	R	R	R	R	R	R	R	R	R	R	R

Bit	Bit Name	Initial Value	R/W	Description
15 to 8	—	All 0	R	Reserved These bits are always read as 0. The write value should always be 0.

chanhvinh.com

Bit	Bit Name	Initial Value	R/W	Description
7	PF23PR	Pin state	R	The pin state is returned. These bits cannot be modified.
6	PF22PR	Pin state	R	
5	PF21PR	Pin state	R	
4	PF20PR	Pin state	R	
3	PF19PR	Pin state	R	
2	PF18PR	Pin state	R	
1	PF17PR	Pin state	R	
0	PF16PR	Pin state	R	

(2) Port F Port Register 0 (PFPR0)

Bit:	15	14	13	12	11	10	9	8	7	6	5	4	3	2	1	0
	PF15PR	PF14PR	PF13PR	PF12PR	PF11PR	PF10PR	PF9PR	PF8PR	PF7PR	PF6PR	PF5PR	PF4PR	PF3PR	PF2PR	PF1PR	PF0PR
Initial value:	PF15	PF14	PF13	PF12	PF11	PF10	PF9	PF8	PF7	PF6	PF5	PF4	PF3	PF2	PF1	PF0
R/W:	R	R	R	R	R	R	R	R	R	R	R	R	R	R	R	R

Bit	Bit Name	Initial Value	R/W	Description
15	PF15PR	Pin state	R	The pin state is returned. These bits cannot be modified.
14	PF14PR	Pin state	R	
13	PF13PR	Pin state	R	
12	PF12PR	Pin state	R	
11	PF11PR	Pin state	R	
10	PF10PR	Pin state	R	
9	PF9PR	Pin state	R	
8	PF6PR	Pin state	R	
7	PF7PR	Pin state	R	
6	PF6PR	Pin state	R	
5	PF5PR	Pin state	R	
4	PF4PR	Pin state	R	
3	PF3PR	Pin state	R	
2	PF2PR	Pin state	R	
1	PF1PR	Pin state	R	
0	PF0PR	Pin state	R	

chanhvinh.com

48.2.24 Port G Control Registers 0 to 6 (PGCR0 to PGCR6)

PGCR0 to PGCR6 are 16-bit readable/writable registers that are used to select the functions of the multiplexed pins on port G.

(1) Port G Control Register 6 (PGCR6)

Bit:	15	14	13	12	11	10	9	8	7	6	5	4	3	2	1	0
	-	-	PG27MD[1:0]		-	-	PG26MD[1:0]		-	-	PG25MD[1:0]		-	-	PG24MD[1:0]	
Initial value:	0	0	0	0	0	0	0	0	0	0	0	0	0	0	0	0
R/W:	R	R	R/W	R/W	R	R	R/W	R/W	R	R	R/W	R/W	R	R	R/W	R/W

Bit	Bit Name	Initial Value	R/W	Description
15, 14	—	All 0	R	Reserved These bits are always read as 0. The write value should always be 0.
13, 12	PG27MD[1:0]	00	R/W	PG27 Mode Select the function of the PG27. 00: PG27 10: LCD_TCON2 01: Setting prohibited 11: LCD_EXTCLK
11, 10	—	All 0	R	Reserved These bits are always read as 0. The write value should always be 0.
9, 8	PG26MD[1:0]	00	R/W	PG26 Mode Select the function of the PG26. 00: PG26 10: LCD_TCON1 01: Setting prohibited 11: Setting prohibited
7, 6	—	All 0	R	Reserved These bits are always read as 0. The write value should always be 0.
5, 4	PG25MD[1:0]	00	R/W	PG25 Mode Select the function of the PG25. 00: PG25 10: LCD_TCON0 01: Setting prohibited 11: Setting prohibited
3, 2	—	All 0	R	Reserved These bits are always read as 0. The write value should always be 0.

chanhvinh.com

Bit	Bit Name	Initial Value	R/W	Description
1, 0	PG24MD[1:0]	00	R/W	PG24 Mode Select the function of the PG24. 00: PG24 10: LCD_CLK 01: Setting prohibited 11: Setting prohibited

(2) Port G Control Register 5 (PGCR5)

Bit:	15	14	13	12	11	10	9	8	7	6	5	4	3	2	1	0
	-	PG23MD[2:0]			-	PG22MD[2:0]			-	PG21MD[2:0]			-	PG20MD[2:0]		
Initial value:	0	0	0	0	0	0	0	0	0	0	0	0	0	0	0	0
R/W:	R	R/W	R/W	R/W	R	R/W	R/W	R/W	R	R/W	R/W	R/W	R	R/W	R/W	R/W

Bit	Bit Name	Initial Value	R/W	Description
15	—	0	R	Reserved This bit is always read as 0. The write value should always be 0.
14 to 12	PG23MD[2:0]	000	R/W	PG23 Mode Select the function of the PG23. 000: PG23 100: TxD5 001: Setting prohibited 101: Setting prohibited 010: LCD_DATA23 110: Setting prohibited 011: LCD_TCON6 111: Setting prohibited
11	—	0	R	Reserved This bit is always read as 0. The write value should always be 0.
10 to 8	PG22MD[2:0]	000	R/W	PG22 Mode Select the function of the PG22. 000: PG22 100: RxD5 001: Setting prohibited 101: Setting prohibited 010: LCD_DATA22 110: Setting prohibited 011: LCD_TCON5 111: Setting prohibited
7	—	0	R	Reserved This bit is always read as 0. The write value should always be 0.

chanhvinh.com

Bit	Bit Name	Initial Value	R/W	Description
6 to 4	PG21MD[2:0]	00	R/W	PG21 Mode Select the function of the PG21. 000: PG21 100: TxD4 001: DV_DATA7 101: Setting prohibited 010: LCD_DATA21 110: Setting prohibited 011: LCD_TCON4 111: Setting prohibited
3	—	0	R	Reserved This bit is always read as 0. The write value should always be 0.
2 to 0	PG20MD[2:0]	000	R/W	PG20 Mode Select the function of the PG20. 000: PG20 100: RxD4 001: DV_DATA6 101: Setting prohibited 010: LCD_DATA20 110: Setting prohibited 011: LCD_TCON3 111: Setting prohibited

(3) Port G Control Register 4 (PGCR4)

Bit:	15	14	13	12	11	10	9	8	7	6	5	4	3	2	1	0
	-	PG19MD[2:0]			-	PG18MD[2:0]			-	PG17MD[2:0]			-	PG16MD[2:0]		
Initial value:	0	0	0	0	0	0	0	0	0	0	0	0	0	0	0	0
R/W:	R	R/W	R/W	R/W	R	R/W	R/W	R/W	R	R/W	R/W	R/W	R	R/W	R/W	R/W

Bit	Bit Name	Initial Value	R/W	Description
15	—	0	R	Reserved This bit is always read as 0. The write value should always be 0.
14 to 12	PG19MD[2:0]	000	R/W	PG19 Mode Select the function of the PG19. 000: PG19 100: SCK5 001: DV_DATA5 101: Setting prohibited 010: LCD_DATA19 110: Setting prohibited 011: SPDIF_OUT 111: Setting prohibited

chanhvinh.com

Bit	Bit Name	Initial Value	R/W	Description
11	—	0	R	Reserved This bit is always read as 0. The write value should always be 0.
10 to 8	PG18MD[2:0]	000	R/W	PG18 Mode Select the function of the PG18. 000: PG18 100: SCK4 001: DV_DATA4 101: Setting prohibited 010: LCD_DATA18 110: Setting prohibited 011: SPDIF_IN 111: Setting prohibited
7, 6	—	All 0	R	Reserved These bits are always read as 0. The write value should always be 0.
5, 4	PG17MD[1:0]	00	R/W	PG17 Mode Select the function of the PG17. 00: PG17 10: LCD_DATA17 01: $\overline{WE3}$/ICIOWR/$\overline{AH}$/ DQMUU 11: Setting prohibited
3, 2	—	All 0	R	Reserved These bits are always read as 0. The write value should always be 0.
1, 0	PG16MD[1:0]	00	R/W	PG16 Mode Select the function of the PG16. 00: PG16 10: LCD_DATA16 01: $\overline{WE2}$/ICIORD/ DQMUL 11: Setting prohibited

chanhvinh.com

(4) Port G Control Register 3 (PGCR3)

Bit:	15	14	13	12	11	10	9	8	7	6	5	4	3	2	1	0
	-	-	PG15MD[1:0]		-	-	PG14MD[1:0]		-	-	PG13MD[1:0]		-	-	PG12MD[1:0]	
Initial value:	0	0	0	0/1	0	0	0	0/1	0	0	0	0/1	0	0	0	0/1
R/W:	R	R	R/W	R/W	R	R/W	R/W	R/W	R	R	R/W	R/W	R	R	R/W	R/W

Bit	Bit Name	Initial Value	R/W	Description
15, 14	—	All 0	R	Reserved These bits are always read as 0. The write value should always be 0.
13, 12	PG15MD[1:0]	00/01	R/W	PG15 Mode Select the function of the PG15. Boot mode 1 — Boot mode 0, 2 to 5 00: Setting prohibited — 00: PG15 (initial value) 01: D31 (initial value) — 01: D31 10: Setting prohibited — 10: LCD_DATA15 11: Setting prohibited — 11: PINT7
11, 10	—	All 0	R	Reserved These bits are always read as 0. The write value should always be 0.
9, 8	PG14MD[1:0]	00/01	R/W	PG14 Mode Select the function of the PG14. Boot mode 1 — Boot mode 0, 2 to 5 00: Setting prohibited — 00: PG14 (initial value) 01: D30 (initial value) — 01: D30 10: Setting prohibited — 10: LCD_DATA14 11: Setting prohibited — 11: PINT6
7, 6	—	All 0	R	Reserved This bit is always read as 0. The write value should always be 0.

chanhvinh.com

Bit	Bit Name	Initial Value	R/W	Description
5, 4	PG13MD[1:0]	00/01	R/W	PG13 Mode Select the function of the PG13. Boot mode 1 / Boot mode 0, 2 to 5 00: Setting prohibited / 00: PG13 (initial value) 01: D29 (initial value) / 01: D29 10: Setting prohibited / 10: LCD_DATA13 11: Setting prohibited / 11: PINT5
3, 2	—	All 0	R	Reserved These bits are always read as 0. The write value should always be 0.
1, 0	PG12MD[1:0]	00/01	R/W	PG12 Mode Select the function of the PG12. Boot mode 1 / Boot mode 0, 2 to 5 00: Setting prohibited / 00: PG12 (initial value) 01: D28 (initial value) / 01: D28 10: Setting prohibited / 10: LCD_DATA12 11: Setting prohibited / 11: PINT4

chanhvinh.com

(5) Port G Control Register 2 (PGCR2)

Bit:	15	14	13	12	11	10	9	8	7	6	5	4	3	2	1	0
	-	PG11MD[2:0]			-	PG10MD[2:0]			-	PG9MD[2:0]			-	PG8MD[2:0]		
Initial value:	0	0	0	0/1	0	0	0	0/1	0	0	0	0/1	0	0	0	0/1
R/W:	R	R/W	R/W	R/W	R	R/W	R/W	R/W	R	R/W	R/W	R/W	R	R/W	R/W	R/W

Bit	Bit Name	Initial Value	R/W	Description
15	—	0	R	Reserved This bit is always read as 0. The write value should always be 0.
14 to 12	PG11MD[2:0]	000/001	R/W	PG11 Mode Select the function of the PG11. Boot mode 1 000: Setting prohibited 001: D27 (initial value) 010: Setting prohibited 011: Setting prohibited 100: Setting prohibited 101: Setting prohibited 110: Setting prohibited 111: Setting prohibited Boot mode 0, 2 to 5 000: PG11 (initial value) 001: D27 010: LCD_DATA11 011: PINT3 100: TIOC3D 101: Setting prohibited 110: Setting prohibited 111: Setting prohibited
11	—	0	R	Reserved This bit is always read as 0. The write value should always be 0.

chanhvinh.com

Bit	Bit Name	Initial Value	R/W	Description
10 to 8	PG10MD[2:0]	000/001	R/W	PG10 Mode Select the function of the PG10. Boot mode 1 / Boot mode 0, 2 to 5 000: Setting prohibited / 000: PG10 (initial value) 001: D26 (initial value) / 001: D26 010: Setting prohibited / 010: LCD_DATA10 011: Setting prohibited / 011: PINT2 100: Setting prohibited / 100: TIOC3C 101: Setting prohibited / 101: Setting prohibited 110: Setting prohibited / 110: Setting prohibited 111: Setting prohibited / 111: Setting prohibited
7	—	0	R	Reserved This bit is always read as 0. The write value should always be 0.
6 to 4	PG9MD[2:0]	000/001	R/W	PG9 Mode Select the function of the PG9. Boot mode 1 / Boot mode 0, 2 to 5 000: Setting prohibited / 000: PG9 (initial value) 001: D25 (initial value) / 001: D25 010: Setting prohibited / 010: LCD_DATA9 011: Setting prohibited / 011: PINT1 100: Setting prohibited / 100: TIOC3B 101: Setting prohibited / 101: Setting prohibited 110: Setting prohibited / 110: Setting prohibited 111: Setting prohibited / 111: Setting prohibited
3	—	0	R	Reserved This bit is always read as 0. The write value should always be 0.

chanhvinh.com

Bit	Bit Name	Initial Value	R/W	Description
2 to 0	PG8MD[2:0]	000/001	R/W	PG8 Mode Select the function of the PG8. Boot mode 1 / Boot mode 0, 2 to 5 000: Setting prohibited / 000: PG8 (initial value) 001: D24 (initial value) / 001: D24 010: Setting prohibited / 010: LCD_DATA8 011: Setting prohibited / 011: PINT0 100: Setting prohibited / 100: TIOC3A 101: Setting prohibited / 101: Setting prohibited 110: Setting prohibited / 110: Setting prohibited 111: Setting prohibited / 111: Setting prohibited

(6) Port G Control Register 1 (PGCR1)

Bit:	15	14	13	12	11	10	9	8	7	6	5	4	3	2	1	0
	-	PG7MD[2:0]			-	PG6MD[2:0]			-	PG5MD[2:0]			-	PG4MD[2:0]		
Initial value:	0	0	0	0/1	0	0	0	0/1	0	0	0	0/1	0	0	0	0/1
R/W:	R	R/W	R/W	R/W	R	R/W	R/W	R/W	R	R/W	R/W	R/W	R	R/W	R/W	R/W

Bit	Bit Name	Initial Value	R/W	Description
15	—	0	R	Reserved This bit is always read as 0. The write value should always be 0.
14 to 12	PG7MD[2:0]	000/001	R/W	PG7 Mode Select the function of the PG7. Boot mode 1 / Boot mode 0, 2 to 5 000: Setting prohibited / 000: PG7 (initial value) 001: D23 (initial value) / 001: D23 010: Setting prohibited / 010: LCD_DATA7 011: Setting prohibited / 011: IRQ7 100: Setting prohibited / 100: TIOC2B 101: Setting prohibited / 101: Setting prohibited 110: Setting prohibited / 110: Setting prohibited 111: Setting prohibited / 111: Setting prohibited

chanhvinh.com

Bit	Bit Name	Initial Value	R/W	Description
11	—	0	R	Reserved This bit is always read as 0. The write value should always be 0.
10 to 8	PG6MD[2:0]	000/001	R/W	PG6 Mode Select the function of the PG6. Boot mode 1 / Boot mode 0, 2 to 5 000: Setting prohibited / 000: PG6 (initial value) 001: D22 (initial value) / 001: D22 010: Setting prohibited / 010: LCD_DATA6 011: Setting prohibited / 011: IRQ6 100: Setting prohibited / 100: TIOC2A 101: Setting prohibited / 101: Setting prohibited 110: Setting prohibited / 110: Setting prohibited 111: Setting prohibited / 111: Setting prohibited
7	—	0	R	Reserved This bit is always read as 0. The write value should always be 0.
6 to 4	PG5MD[2:0]	000/001	R/W	PG5 Mode Select the function of the PG5. Boot mode 1 / Boot mode 0, 2 to 5 000: Setting prohibited / 000: PG5 (initial value) 001: D21 (initial value) / 001: D21 010: Setting prohibited / 010: LCD_DATA5 011: Setting prohibited / 011: IRQ5 100: Setting prohibited / 100: TIOC1B 101: Setting prohibited / 101: Setting prohibited 110: Setting prohibited / 110: Setting prohibited 111: Setting prohibited / 111: Setting prohibited
3	—	0	R	Reserved This bit is always read as 0. The write value should always be 0.

chanhvinh.com

Bit	Bit Name	Initial Value	R/W	Description
2 to 0	PG4MD[2:0]	000/001	R/W	PG4 Mode Select the function of the PG4. Boot mode 1 — Boot mode 0, 2 to 5 000: Setting prohibited — 000: PG4 (initial value) 001: D20 (initial value) — 001: D20 010: Setting prohibited — 010: LCD_DATA4 011: Setting prohibited — 011: IRQ4 100: Setting prohibited — 100: TIOC1A 101: Setting prohibited — 101: Setting prohibited 110: Setting prohibited — 110: Setting prohibited 111: Setting prohibited — 111: Setting prohibited

(7) Port G Control Register 0 (PGCR0)

Bit:	15	14	13	12	11	10	9	8	7	6	5	4	3	2	1	0
	-	PG3MD[2:0]			-	PG2MD[2:0]			-	PG1MD[2:0]			-	PG0MD[2:0]		
Initial value:	0	0	0	0/1	0	0	0	0/1	0	0	0	0/1	0	0	0	0/1
R/W:	R	R/W	R/W	R/W	R	R/W	R/W	R/W	R	R/W	R/W	R/W	R	R/W	R/W	R/W

Bit	Bit Name	Initial Value	R/W	Description
15	—	0	R	Reserved This bit is always read as 0. The write value should always be 0.
14 to 12	PG3MD[2:0]	000/001	R/W	PG3 Mode Select the function of the PG3. Boot mode 1 — Boot mode 0, 2 to 5 000: Setting prohibited — 000: PG3 (initial value) 001: D19 (initial value) — 001: D19 010: Setting prohibited — 010: LCD_DATA3 011: Setting prohibited — 011: IRQ3 100: Setting prohibited — 100: TIOC0D 101: Setting prohibited — 101: Setting prohibited 110: Setting prohibited — 110: Setting prohibited 111: Setting prohibited — 111: Setting prohibited

chanhvinh.com

Bit	Bit Name	Initial Value	R/W	Description
11	—	0	R	Reserved This bit is always read as 0. The write value should always be 0.
10 to 8	PG2MD[2:0]	000/001	R/W	PG2 Mode Select the function of the PG2. Boot mode 1 / Boot mode 0, 2 to 5 000: Setting prohibited / 000: PG2 (initial value) 001: D18 (initial value) / 001: D18 010: Setting prohibited / 010: LCD_DATA2 011: Setting prohibited / 011: IRQ2 100: Setting prohibited / 100: TIOC0C 101: Setting prohibited / 101: Setting prohibited 110: Setting prohibited / 110: Setting prohibited 111: Setting prohibited / 111: Setting prohibited
7	—	0	R	Reserved This bit is always read as 0. The write value should always be 0.
6 to 4	PG1MD[2:0]	000/001	R/W	PG1 Mode Select the function of the PG1. Boot mode 1 / Boot mode 0, 2 to 5 000: Setting prohibited / 000: PG1 (initial value) 001: D17 (initial value) / 001: D17 010: Setting prohibited / 010: LCD_DATA1 011: Setting prohibited / 011: IRQ1 100: Setting prohibited / 100: TIOC0B 101: Setting prohibited / 101: Setting prohibited 110: Setting prohibited / 110: Setting prohibited 111: Setting prohibited / 111: Setting prohibited
3	—	0	R	Reserved This bit is always read as 0. The write value should always be 0.

chanhvinh.com

Bit	Bit Name	Initial Value	R/W	Description
2 to 0	PG0MD[2:0]	000/001	R/W	PG0 Mode Select the function of the PG0. Boot mode 1 / Boot mode 0, 2 to 5 000: Setting prohibited / 000: PG0 (initial value) 001: D16 (initial value) / 001: D16 010: Setting prohibited / 010: LCD_DATA0 011: Setting prohibited / 011: IRQ0 100: Setting prohibited / 100: TIOC0A 101: Setting prohibited / 101: Setting prohibited 110: Setting prohibited / 110: Setting prohibited 111: Setting prohibited / 111: Setting prohibited

48.2.25 Port G I/O Registers 0, 1 (PGIOR0, PGIOR1)

PGIOR1 and PGIOR0 are 16-bit readable/writable registers that are used to set the pins on port G as inputs or outputs. The PG27IOR to PG0IOR bits correspond to the PG27 to PG0, respectively. PGIOR1 and PGIOR0 are enabled when the port G pins are functioning as general-purpose I/O (PG27 to PG0) or TIOC I/O of multi-function timer pulse unit 2. In other states, they are disabled. If bits in PGIOR1 and PGIOR0 are set to 1, corresponding pins on port G functions as outputs. If they are cleared to 0, the corresponding pins function as inputs.

Bits 15 to 12 in PGIOR1 are reserved. These bits are always read as 0. The write values should always be 0.

(1) Port G IO Register 1 (PGIOR1)

Bit:	15	14	13	12	11	10	9	8	7	6	5	4	3	2	1	0
	-	-	-	-	PG27 IOR	PG26 IOR	PG25 IOR	PG24 IOR	PG23 IOR	PG22 IOR	PG21 IOR	PG20 IOR	PG19 IOR	PG18 IOR	PG17 IOR	PG16 IOR
Initial value:	0	0	0	0	0	0	0	0	0	0	0	0	0	0	0	0
R/W:	R	R	R	R	R/W	R/W	R/W	R/W	R/W	R/W	R/W	R/W	R/W	R/W	R/W	R/W

(2) Port G IO Register 0 (PGIOR0)

Bit:	15	14	13	12	11	10	9	8	7	6	5	4	3	2	1	0
	PG15 IOR	PG14 IOR	PG13 IOR	PG12 IOR	PG11 IOR	PG10 IOR	PG9 IOR	PG8 IOR	PG7 IOR	PG6 IOR	PG5 IOR	PG4 IOR	PG3 IOR	PG2 IOR	PG1 IOR	PG0 IOR
Initial value:	0	0	0	0	0	0	0	0	0	0	0	0	0	0	0	0
R/W:	R/W	R/W	R/W	R/W	R/W	R/W	R/W	R/W	R/W	R/W	R/W	R/W	R/W	R/W	R/W	R/W

chanhvinh.com

48.2.26 Port G Data Registers 0, 1 (PGDR0, PGDR1)

PGDR1 and PGDR0 are 16-bit readable/writable registers that store port G data. The PG27DR to PG0DR bits correspond to the PG27 to PGDR0 pins, respectively.

When a pin function is general output, if a value is written to PGDR1 or PGDR0, that value is output from the pin, and if PGDR1 or PGDR0 is read, the register value is returned directly regardless of the pin state.

When a pin function is general input, if PGDR1 or PGDR0 is read, the pin state, not the register value, is returned directly. If a value is written to PGDR1 or PGDR0, although that value is written into PGDR1 or PGDR0, it does not affect the pin state. Table 48.18 summarizes PGDR1/PGDR0 read/write operation.

(1) Port G Data Register 1 (PGDR1)

Bit:	15	14	13	12	11	10	9	8	7	6	5	4	3	2	1	0
	-	-	-	-	PG27DR	PG26DR	PG25DR	PG24DR	PG23DR	PG22DR	PG21DR	PG20DR	PG19DR	PG18DR	PG17DR	PG16DR
Initial value:	0	0	0	0	0	0	0	0	0	0	0	0	0	0	0	0
R/W:	R	R	R	R	R/W	R/W	R/W	R/W	R/W	R/W	R/W	R/W	R/W	R/W	R/W	R/W

Bit	Bit Name	Initial Value	R/W	Description
15 to 12	—	All 0	R	Reserved These bits are always read as 0. The write value should always be 0.
11	PG27DR	0	R/W	See table 48.18
10	PG26DR	0	R/W	
9	PG25DR	0	R/W	
8	PG24DR	0	R/W	
7	PG23DR	0	R/W	
6	PG22DR	0	R/W	
5	PG21DR	0	R/W	
4	PG20DR	0	R/W	
3	PG19DR	0	R/W	
2	PG18DR	0	R/W	
1	PG17DR	0	R/W	
0	PG16DR	0	R/W	

chanhvinh.com

(2) Port G Data Register 0 (PGDR0)

Bit:	15	14	13	12	11	10	9	8	7	6	5	4	3	2	1	0
	PG15 DR	PG14 DR	PG13 DR	PG12 DR	PG11 DR	PG10 DR	PG9 DR	PG8 DR	PG7 DR	PG6 DR	PG5 DR	PG4 DR	PG3 DR	PG2 DR	PG1 DR	PG0 DR
Initial value:	0	0	0	0	0	0	0	0	0	0	0	0	0	0	0	0
R/W:	R/W	R/W	R/W	R/W	R/W	R/W	R/W	R/W	R/W	R/W	R/W	R/W	R/W	R/W	R/W	R/W

Bit	Bit Name	Initial Value	R/W	Description
15	PG15DR	0	R/W	See table 48.18
14	PG14DR	0	R/W	
13	PG13DR	0	R/W	
12	PG12DR	0	R/W	
11	PG11DR	0	R/W	
10	PG10DR	0	R/W	
9	PG9DR	0	R/W	
8	PG8DR	0	R/W	
7	PG7DR	0	R/W	
6	PG6DR	0	R/W	
5	PG5DR	0	R/W	
4	PG4DR	0	R/W	
3	PG3DR	0	R/W	
2	PG2DR	0	R/W	
1	PG1DR	0	R/W	
0	PG0DR	0	R/W	

chanhvinh.com

Table 48.18 Port G Data Registers 1, 0 (PGDR1, PGDR0) Read/Write Operation

- Bits 11 to 0 of PGDR1 and Bits 15 to 0 of PGDR0

PGIOR1, 0	Pin Function	Read Operation	Write Operation
0	General input	Pin state	Can write to PGDR0/PGDR1, but it has no effect on the pin state
	Other than general input	Pin state	Can write to PGDR0/PGDR1, but it has no effect on the pin state
1	General output	PGDR0/PGDR1 value	Value written is output to pin
	Other than general output	PGDR0/PGDR1 value	Can write to PGDR0/PGDR1, but it has no effect on the pin state

48.2.27 Port G Port Registers 0, 1 (PGPR0, PGPR1)

PGPR1 and PGPR0 are 16-bit read-only registers, in which the PG27PR to PG0PR bits correspond to the PG27 to PG0 pins, respectively. PGPR1 and PGPR0 always return the states of the pins regardless of the PGCR6 to PGCR0 settings.

(1) Port G Port Register 1 (PGPR1)

Bit:	15	14	13	12	11	10	9	8	7	6	5	4	3	2	1	0
	-	-	-	-	PG27 PR	PG26 PR	PG25 PR	PG24 PR	PG23 PR	PG22 PR	PG21 PR	PG20 PR	PG19 PR	PG18 PR	PG17 PR	PG16 PR
Initial value:	0	0	0	0	PG27	PG26	PG25	PG24	PG23	PG22	PG21	PG20	PG19	PG18	PG17	PG16
R/W:	R	R	R	R	R	R	R	R	R	R	R	R	R	R	R	R

Bit	Bit Name	Initial Value	R/W	Description
15 to 12	—	All 0	R	Reserved These bits are always read as 0. The write value should always be 0.

chanhvinh.com

Bit	Bit Name	Initial Value	R/W	Description
11	PG27PR	Pin state	R	The pin state is returned. These bits cannot be modified.
10	PG26PR	Pin state	R	
9	PG25PR	Pin state	R	
8	PG24PR	Pin state	R	
7	PG23PR	Pin state	R	
6	PG22PR	Pin state	R	
5	PG21PR	Pin state	R	
4	PG20PR	Pin state	R	
3	PG19PR	Pin state	R	
2	PG18PR	Pin state	R	
1	PG17PR	Pin state	R	
0	PG16PR	Pin state	R	

chanhvinh.com

(2) Port G Port Register 0 (PGPR0)

Bit:	15	14	13	12	11	10	9	8	7	6	5	4	3	2	1	0
	PG15PR	PG14PR	PG13PR	PG12PR	PG11PR	PG10PR	PG9PR	PG8PR	PG7PR	PG6PR	PG5PR	PG4PR	PG3PR	PG2PR	PG1PR	PG0PR
Initial value:	PG15	PG14	PG13	PG12	PG11	PG10	PG9	PG8	PG7	PG6	PG5	PG4	PG3	PG2	PG1	PG0
R/W:	R	R	R	R	R	R	R	R	R	R	R	R	R	R	R	R

Bit	Bit Name	Initial Value	R/W	Description
15	PG15PR	Pin state	R	The pin state is returned. These bits cannot be modified.
14	PG14PR	Pin state	R	
13	PG13PR	Pin state	R	
12	PG12PR	Pin state	R	
11	PG11PR	Pin state	R	
10	PG10PR	Pin state	R	
9	PG9PR	Pin state	R	
8	PG8PR	Pin state	R	
7	PG7PR	Pin state	R	
6	PG6PR	Pin state	R	
5	PG5PR	Pin state	R	
4	PG4PR	Pin state	R	
3	PG3PR	Pin state	R	
2	PG2PR	Pin state	R	
1	PG1PR	Pin state	R	
0	PG0PR	Pin state	R	

chanhvinh.com

48.2.28 Port H Control Registers 0, 1 (PHCR0, PHCR1)

PHCR1 and PHCR0 are 16-bit readable/writable registers that are used to select the function of the multiplexed pins on port H.

(1) Port H Control Register 1 (PHCR1)

Bit:	15	14	13	12	11	10	9	8	7	6	5	4	3	2	1	0
	-	-	PH7MD[1:0]		-	-	PH6MD[1:0]		-	-	PH5MD[1:0]		-	-	PH4MD[1:0]	
Initial value:	0	0	0	0	0	0	0	0	0	0	0	0	0	0	0	0
R/W:	R	R	R/W	R/W	R	R	R/W	R/W	R	R	R/W	R/W	R	R	R/W	R/W

Bit	Bit Name	Initial Value	R/W	Description
15, 14	—	All 0	R	Reserved These bits are always read as 0. The write value should always be 0.
13, 12	PH7MD[1:0]	00	R/W	PH7 Mode Select the function of the PH7. 00: PH7 10: PINT7 01: AN7 11: Setting prohibited Note: Bits 13 and 12 are reserved in the SH7268 Group. These bits are always read as 0. The write value should always be 0.
11, 10	—	All 0	R	Reserved These bits are always read as 0. The write value should always be 0.
9, 8	PH6MD[1:0]	00	R/W	PH6 Mode Select the function of the PH6. 00: PH6 10: PINT6 01: AN6 11: Setting prohibited Note: Bits 9 and 8 are reserved in the SH7268 Group. These bits are always read as 0. The write value should always be 0.
7, 6	—	All 0	R	Reserved These bits are always read as 0. The write value should always be 0.

chanhvinh.com

Bit	Bit Name	Initial Value	R/W	Description
5, 4	PH5MD[1:0]	00	R/W	PH5 Mode Select the function of the PH5. 00: PH5 10: PINT5 01: AN5 11: LCD_EXTCLK
3, 2	—	All 0	R	Reserved These bits are always read as 0. The write value should always be 0.
1, 0	PH4MD[1:0]	00	R/W	PH4 Mode Select the function of the PH4. 00: PH4 10: PINT4 01: AN4 11: Setting prohibited

(2) Port H Control Register 0 (PHCR0)

Bit:	15	14	13	12	11	10	9	8	7	6	5	4	3	2	1	0
	-	-	PH3MD[1:0]		-	-	PH2MD[1:0]		-	-	PH1MD[1:0]		-	-	PH0MD[1:0]	
Initial value:	0	0	0	0	0	0	0	0	0	0	0	0	0	0	0	0
R/W:	R	R	R/W	R/W	R	R	R/W	R/W	R	R	R/W	R/W	R	R	R/W	R/W

Bit	Bit Name	Initial Value	R/W	Description
15, 14	—	All 0	R	Reserved These bits are always read as 0. The write value should always be 0.
13, 12	PH3MD[1:0]	00	R/W	PH3 Mode Select the function of the PH3. 00: PH3 10: PINT3 01: AN3 11: Setting prohibited
11, 10	—	All 0	R	Reserved These bits are always read as 0. The write value should always be 0.
9, 8	PH2MD[1:0]	00	R/W	PH2 Mode Select the function of the PH2. 00: PH2 10: PINT2 01: AN2 11: Setting prohibited

chanhvinh.com

Bit	Bit Name	Initial Value	R/W	Description
7, 6	—	All 0	R	Reserved These bits are always read as 0. The write value should always be 0.
5, 4	PH1MD[1:0]	00	R/W	PH1 Mode Select the function of the PH1. 00: PH1 10: PINT1 01: AN1 11: Setting prohibited
3, 2	—	All 0	R	Reserved These bits are always read as 0. The write value should always be 0.
1, 0	PH0MD[1:0]	00	R/W	PH3 Mode Select the function of the PH0. 00: PH0 10: PINT0 01: AN0 11: Setting prohibited

48.2.29 Port H Port Register 0 (PHPR0)

PHPR0 is a 16-bit read-only register, in which the PH7PR to PH0PR bits correspond to the PH7 to PH0 pins, respectively. PHPR0 always returns the states of the pins when the general input function is selected. This register is read as 1 during operation of the A/D converter.

Bit:	15	14	13	12	11	10	9	8	7	6	5	4	3	2	1	0
	-	-	-	-	-	-	-	-	PH7PR	PH6PR	PH5PR	PH4PR	PH3PR	PH2PR	PH1PR	PH0PR
Initial value:	0	0	0	0	0	0	0	0	PH7	PH6	PH5	PH4	PH3	PH2	PH1	PH0
R/W:	R	R	R	R	R	R	R	R	R	R	R	R	R	R	R	R

Bit	Bit Name	Initial Value	R/W	Description
15 to 8	—	All 0	R	Reserved These bits are always read as 0. The write value should always be 0.

chanhvinh.com

Bit	Bit Name	Initial Value	R/W	Description
7	PH7PR	Pin state	R	The pin state is returned. These bits cannot be modified. Note: Bits 7 and 6 are reserved in the SH7268 Group. These bits are always read as 0. The write value should always be 0.
6	PH6PR	Pin state	R	
5	PH5PR	Pin state	R	
4	PH4PR	Pin state	R	
3	PH3PR	Pin state	R	
2	PH2PR	Pin state	R	
1	PH1PR	Pin state	R	
0	PH0PR	Pin state	R	

48.2.30 Port J Control Registers 0 to 7 (PJCR0 to PJCR7: Available Only in the SH7269 Group)

PJCR7 to PJCR0 are 16-bit readable/writable registers that are used to select the functions of the multiplexed pins on port J.

(1) Port J Control Register 7 (PJCR7)

Bit:	15	14	13	12	11	10	9	8	7	6	5	4	3	2	1	0
	-	-	-	PJ31MD	-	PJ30MD[2:0]			-	PJ29MD[2:0]			-	PJ28MD[2:0]		
Initial value:	0	0	0	0	0	0	0	0	0	0	0	0	0	0	0	0
R/W:	R	R	R	R/W	R	R/W	R/W	R/W	R	R/W	R/W	R/W	R	R/W	R/W	R/W

Bit	Bit Name	Initial Value	R/W	Description
15 to 13	—	All 0	R	Reserved These bits are always read as 0. The write value should always be 0.
12	PJ31MD	0	R/W	PJ31 Mode Select the function of the PJ31. 0: PJ31 1: DV_CLK
11	—	0	R	Reserved This bit is always read as 0. The write value should always be 0.

chanhvinh.com

Bit	Bit Name	Initial Value	R/W	Description
10 to 8	PJ30MD[2:0]	000	R/W	PJ30 Mode Select the function of the PJ30. 000: PJ30 100: TIOC2B 001: Setting prohibited 101: IETxD 010: SSIDATA5 110: Setting prohibited 011: Setting prohibited 111: Setting prohibited
7	—	0	R	Reserved This bit is always read as 0. The write value should always be 0.
6 to 4	PJ29MD[2:0]	000	R/W	PJ29 Mode Select the function of the PJ29. 000: PJ29 100: TIOC2A 001: Setting prohibited 101: IERxD 010: SSIWS5 110: Setting prohibited 011: Setting prohibited 111: Setting prohibited
3	—	0	R	Reserved This bit is always read as 0. The write value should always be 0.
2 to 0	PJ28MD[2:0]	000	R/W	PJ28 Mode Select the function of the PJ28. 000: PJ28 100: TIOC1B 001: Setting prohibited 101: $\overline{\text{RTS7}}$ 010: SSISCK5 110: Setting prohibited 011: Setting prohibited 111: Setting prohibited

chanhvinh.com

(2) Port J Control Register 6 (PJCR6)

Bit:	15	14	13	12	11	10	9	8	7	6	5	4	3	2	1	0
	-	PJ27MD[2:0]			-	PJ26MD[2:0]			-	PJ25MD[2:0]			-	PJ24MD[2:0]		
Initial value:	0	0	0	0	0	0	0	0	0	0	0	0	0	0	0	0
R/W:	R	R/W	R/W	R/W	R	R/W	R/W	R/W	R	R/W	R/W	R/W	R	R/W	R/W	R/W

Bit	Bit Name	Initial Value	R/W	Description
15	—	0	R	Reserved This bit is always read as 0. The write value should always be 0.
14 to 12	PJ27MD[2:0]	000	R/W	PJ27 Mode Select the function of the PJ27. 000: PJ27 100: TIOC1A 001: SGOUT_3 101: $\overline{\text{CTS7}}$ 010: Setting prohibited 110: Setting prohibited 011: Setting prohibited 111: Setting prohibited
11	—	0	R	Reserved This bit is always read as 0. The write value should always be 0.
10 to 8	PJ26MD[2:0]	000	R/W	PJ26 Mode Select the function of the PJ26. 000: PJ26 100: Setting prohibited 001: SGOUT_2 101: TxD7 010: SSIDATA4 110: Setting prohibited 011: LCD_TCON5 111: Setting prohibited
7	—	0	R	Reserved This bit is always read as 0. The write value should always be 0.
6 to 4	PJ25MD[2:0]	000	R/W	PJ25 Mode Select the function of the PJ25. 000: PJ25 100: SPDIF_OUT 001: SGOUT_1 101: RxD7 010: SSIWS4 110: Setting prohibited 011: LCD_TCON4 111: Setting prohibited

chanhvinh.com

Bit	Bit Name	Initial Value	R/W	Description
3	—	0	R	Reserved This bit is always read as 0. The write value should always be 0.
2 to 0	PJ24MD[2:0]	000	R/W	PJ24 Mode Select the function of the PJ24. 000: PJ24 100: SPDIF_IN 001: SGOUT_0 101: SCK7 010: SSISCK4 110: Setting prohibited 011: LCD_TCON3 111: Setting prohibited

(3) Port J Control Register 5 (PJCR5)

Bit:	15	14	13	12	11	10	9	8	7	6	5	4	3	2	1	0
	-	PJ23MD[2:0]			-	PJ22MD[2:0]			-	PJ21MD[2:0]			-	PJ20MD[2:0]		
Initial value:	0	0	0	0	0	0	0	0	0	0	0	0	0	0	0	0
R/W:	R	R/W	R/W	R/W	R	R/W	R/W	R/W	R	R/W	R/W	R/W	R	R/W	R/W	R/W

Bit	Bit Name	Initial Value	R/W	Description
15	—	0	R	Reserved This bit is always read as 0. The write value should always be 0.
14 to 12	PJ23MD[2:0]	000	R/W	PJ23 Mode Select the function of the PJ23. 000: PJ23 100: IRQ3 001: DV_DATA23 101: CTx1 010: LCD_DATA23 110: CTx0&CTx1 011: LCD_TCON6 111: Setting prohibited
11	—	0	R	Reserved This bit is always read as 0. The write value should always be 0.

chanhvinh.com

Bit	Bit Name	Initial Value	R/W	Description
10 to 8	PJ22MD[2:0]	000	R/W	PJ22 Mode Select the function of the PJ22. 000: PJ22 001: DV_DATA22 010: LCD_DATA22 011: LCD_TCON5 100: IRQ2 101: CRx1 110: CRx0/CRx1 111: Setting prohibited
7	—	0	R	Reserved This bit is always read as 0. The write value should always be 0.
6 to 4	PJ21MD[2:0]	000	R/W	PJ21 Mode Select the function of the PJ21. 000: PJ21 001: DV_DATA21 010: LCD_DATA21 011: LCD_TCON4 100: IRQ1 101: CTx2 110: CTx0&CTx1&CTx2 111: Setting prohibited
3	—	0	R	Reserved This bit is always read as 0. The write value should always be 0.
2 to 0	PJ20MD[2:0]	000	R/W	PJ20 Mode Select the function of the PJ20. 000: PJ20 001: DV_DATA20 010: LCD_DATA20 011: LCD_TCON3 100: IRQ0 101: CRx2 110: CRx0/CRx1/CRx2 111: Setting prohibited

chanhvinh.com

(4) Port J Control Register 4 (PJCR4)

Bit:	15	14	13	12	11	10	9	8	7	6	5	4	3	2	1	0
	-	PJ19MD[2:0]			-	PJ18MD[2:0]			-	PJ17MD[2:0]			-	PJ16MD[2:0]		
Initial value:	0	0	0	0	0	0	0	0	0	0	0	0	0	0	0	0
R/W:	R	R/W	R/W	R/W	R	R/W	R/W	R/W	R	R/W	R/W	R/W	R	R/W	R/W	R/W

Bit	Bit Name	Initial Value	R/W	Description
15	—	0	R	Reserved This bit is always read as 0. The write value should always be 0.
14 to 12	PJ19MD[2:0]	000	R/W	PJ19 Mode Select the function of the PJ19. 000: PJ19 100: TIOC0D 001: DV_DATA19 101: SIOFRxD 010: LCD_DATA19 110: AUDIO_XOUT 011: MISO0 111: Setting prohibited
11	—	0	R	Reserved This bit is always read as 0. The write value should always be 0.
10 to 8	PJ18MD[2:0]	000	R/W	PJ18 Mode Select the function of the PJ18. 000: PJ18 100: TIOC0C 001: DV_DATA18 101: SIOFTxD 010: LCD_DATA18 110: Setting prohibited 011: MOSI0 111: Setting prohibited
7	—	0	R	Reserved This bit is always read as 0. The write value should always be 0.
6 to 4	PJ17MD[2:0]	000	R/W	PJ17 Mode Select the function of the PJ17. 000: PJ17 100: TIOC0B 001: DV_DATA17 101: SIOFSYNC 010: LCD_DATA17 110: Setting prohibited 011: SSL00 111: Setting prohibited

chanhvinh.com

Bit	Bit Name	Initial Value	R/W	Description
3	—	0	R	Reserved This bit is always read as 0. The write value should always be 0.
2 to 0	PJ16MD[2:0]	000	R/W	PJ16 Mode Select the function of the PJ16. 000: PJ16 100: TIOC0A 001: DV_DATA16 101: SIOFSCK 010: LCD_DATA16 110: Setting prohibited 011: RSPCK0 111: Setting prohibited

(5) Port J Control Register 3 (PJCR3)

Bit:	15	14	13	12	11	10	9	8	7	6	5	4	3	2	1	0
	-	PJ15MD[2:0]			-	PJ14MD[2:0]			-	PJ13MD[2:0]			-	PJ12MD[2:0]		
Initial value:	0	0	0	0	0	0	0	0	0	0	0	0	0	0	0	0
R/W:	R	R/W	R/W	R/W	R	R/W	R/W	R/W	R	R/W	R/W	R/W	R	R/W	R/W	R/W

Bit	Bit Name	Initial Value	R/W	Description
15	—	0	R	Reserved This bit is always read as 0. The write value should always be 0.
14 to 12	PJ15MD[2:0]	000	R/W	PJ15 Mode Select the function of the PJ15. 000: PJ15 100: PWM2H 001: DV_DATA15 101: TxD7 010: LCD_DATA15 110: Setting prohibited 011: PINT7 111: Setting prohibited
11	—	0	R	Reserved This bit is always read as 0. The write value should always be 0.

chanhvinh.com

Bit	Bit Name	Initial Value	R/W	Description
10 to 8	PJ14MD[2:0]	000	R/W	PJ14 Mode Select the function of the PJ14. 000: PJ14 100: PWM2G 001: DV_DATA14 101: TxD6 010: LCD_DATA14 110: Setting prohibited 011: PINT6 111: Setting prohibited
7	—	0	R	Reserved This bit is always read as 0. The write value should always be 0.
6 to 4	PJ13MD[2:0]	000	R/W	PJ13 Mode Select the function of the PJ13. 000: PJ13 100: PWM2F 001: DV_DATA13 101: TxD5 010: LCD_DATA13 110: Setting prohibited 011: PINT5 111: Setting prohibited
3	—	0	R	Reserved This bit is always read as 0. The write value should always be 0.
2 to 0	PJ12MD[2:0]	000	R/W	PJ12 Mode Select the function of the PJ12. 000: PJ12 100: PWM2E 001: DV_DATA12 101: SCK7 010: LCD_DATA12 110: Setting prohibited 011: PINT4 111: Setting prohibited

chanhvinh.com

(6) Port J Control Register 2 (PJCR2)

Bit:	15	14	13	12	11	10	9	8	7	6	5	4	3	2	1	0
	-	PJ11MD[2:0]			-	PJ10MD[2:0]			-	PJ9MD[2:0]			-	PJ8MD[2:0]		
Initial value:	0	0	0	0	0	0	0	0	0	0	0	0	0	0	0	0
R/W:	R	R/W	R/W	R/W	R	R/W	R/W	R/W	R	R/W	R/W	R/W	R	R/W	R/W	R/W

Bit	Bit Name	Initial Value	R/W	Description
15	—	0	R	Reserved This bit is always read as 0. The write value should always be 0.
14 to 12	PJ11MD[2:0]	000	R/W	PJ11 Mode Select the function of the PJ11. 000: PJ11 100: PWM2D 001: DV_DATA11 101: SCK6 010: LCD_DATA11 110: Setting prohibited 011: PINT3 111: Setting prohibited
11	—	0	R	Reserved This bit is always read as 0. The write value should always be 0.
10 to 8	PJ10MD[2:0]	000	R/W	PJ10 Mode Select the function of the PJ10. 000: PJ10 100: PWM2C 001: DV_DATA10 101: SCK5 010: LCD_DATA10 110: Setting prohibited 011: PINT2 111: Setting prohibited
7	—	0	R	Reserved This bit is always read as 0. The write value should always be 0.
6 to 4	PJ9MD[2:0]	000	R/W	PJ9Mode Select the function of the PJ9. 000: PJ9 100: PWM2B 001: DV_DATA9 101: $\overline{\text{RTS5}}$ 010: LCD_DATA9 110: Setting prohibited 011: PINT1 111: Setting prohibited

chanhvinh.com

Bit	Bit Name	Initial Value	R/W	Description
3	—	0	R	Reserved This bit is always read as 0. The write value should always be 0.
2 to 0	PJ8MD[2:0]	000	R/W	PJ8 Mode Select the function of the PJ8. 000: PJ8 100: PWM2A 001: DV_DATA8 101: $\overline{\text{CTS5}}$ 010: LCD_DATA8 110: Setting prohibited 011: PINT0 111: Setting prohibited

(7) Port J Control Register 1 (PJCR1)

Bit:	15	14	13	12	11	10	9	8	7	6	5	4	3	2	1	0
	-	PJ7MD[2:0]			-	PJ6MD[2:0]			-	PJ5MD[2:0]			-	PJ4MD[2:0]		
Initial value:	0	0	0	0	0	0	0	0	0	0	0	0	0	0	0	0
R/W:	R	R/W	R/W	R/W	R	R/W	R/W	R/W	R	R/W	R/W	R/W	R	R/W	R/W	R/W

Bit	Bit Name	Initial Value	R/W	Description
15	—	0	R	Reserved This bit is always read as 0. The write value should always be 0.
14 to 12	PJ7MD[2:0]	000	R/W	PJ7 Mode Select the function of the PJ7. 000: PJ7 100: PWM1H 001: DV_DATA7 101: Setting prohibited 010: LCD_DATA7 110: Setting prohibited 011: SD_D2_1 111: Setting prohibited
11	—	0	R	Reserved This bit is always read as 0. The write value should always be 0.

chanhvinh.com

Bit	Bit Name	Initial Value	R/W	Description
10 to 8	PJ6MD[2:0]	000	R/W	PJ6 Mode Select the function of the PJ6. 000: PJ6 100: PWM1G 001: DV_DATA6 101: Setting prohibited 010: LCD_DATA6 110: Setting prohibited 011: SD_D3_1 111: Setting prohibited
7	—	0	R	Reserved This bit is always read as 0. The write value should always be 0.
6 to 4	PJ5MD[2:0]	000	R/W	PJ5 Mode Select the function of the PJ5. 000: PJ5 100: PWM1F 001: DV_DATA5 101: Setting prohibited 010: LCD_DATA5 110: Setting prohibited 011: SD_CMD_1 111: Setting prohibited
3	—	0	R	Reserved This bit is always read as 0. The write value should always be 0.
2 to 0	PJ4MD[2:0]	000	R/W	PJ4 Mode Select the function of the PJ4. 000: PJ4 100: PWM1E 001: DV_DATA4 101: Setting prohibited 010: LCD_DATA4 110: Setting prohibited 011: SD_CLK_1 111: Setting prohibited

chanhvinh.com

(8) Port J Control Register 0 (PJCR0)

Bit:	15	14	13	12	11	10	9	8	7	6	5	4	3	2	1	0
	-	PJ3MD[2:0]			-	PJ2MD[2:0]			-	PJ1MD[2:0]			-	PJ0MD[2:0]		
Initial value:	0	0	0	0	0	0	0	0	0	0	0	0	0	0	0	0
R/W:	R	R/W	R/W	R/W	R	R/W	R/W	R/W	R	R/W	R/W	R/W	R	R/W	R/W	R/W

Bit	Bit Name	Initial Value	R/W	Description
15	—	0	R	Reserved This bit is always read as 0. The write value should always be 0.
14 to 12	PJ3MD[2:0]	000	R/W	PJ3 Mode Select the function of the PJ3. 000: PJ3 100: PWM1D 001: DV_DATA3 101: Setting prohibited 010: LCD_DATA3 110: Setting prohibited 011: SD_D0_1 111: Setting prohibited
11	—	0	R	Reserved This bit is always read as 0. The write value should always be 0.
10 to 8	PJ2MD[2:0]	000	R/W	PJ2 Mode Select the function of the PJ2. 000: PJ2 100: PWM1C 001: DV_DATA2 101: Setting prohibited 010: LCD_DATA2 110: Setting prohibited 011: SD_D1_1 111: Setting prohibited
7	—	0	R	Reserved This bit is always read as 0. The write value should always be 0.
6 to 4	PJ1MD[2:0]	000	R/W	PJ1 Mode Select the function of the PJ1. 000: PJ1 100: PWM1B 001: DV_DATA1 101: Setting prohibited 010: LCD_DATA1 110: Setting prohibited 011: SD_WP_1 111: Setting prohibited

chanhvinh.com

Bit	Bit Name	Initial Value	R/W	Description
3	—	0	R	Reserved This bit is always read as 0. The write value should always be 0.
2 to 0	PJ0MD[2:0]	000	R/W	PJ0 Mode Select the function of the PJ0. 000: PJ0 100: PWM1A 001: DV_DATA0 101: Setting prohibited 010: LCD_DATA0 110: Setting prohibited 011: SD_CD_1 111: Setting prohibited

48.2.31 Port J I/O registers 0, 1 (PJIOR0, PJIOR1: Available Only in the SH7269 Group)

PJIOR0 and PJIOR1 are 16-bit readable/writable registers that are used to set the pins on port J as inputs or outputs. The PJ31IOR to PJ0IOR bits correspond to the PJ31 to PJ0 pins respectively. The setting of PJIOR0 or PJIOR1 is valid for the pins for which general I/O (PJ31 to PJ0) function and has no effect on the pins for which other function is selected. If a bit in PJIOR0 or PJIOR1 is set to 1, the corresponding pin on port J functions as an output pin. If it is cleared to 0, the corresponding pin functions as an input pin.

(1) Port J IO Register 1 (PJIOR1)

Bit:	15	14	13	12	11	10	9	8	7	6	5	4	3	2	1	0
	PJ31 IOR	PJ30 IOR	PJ29 IOR	PJ28 IOR	PJ27 IOR	PJ26 IOR	PJ25 IOR	PJ24 IOR	PJ23 IOR	PJ22 IOR	PJ21 IOR	PJ20 IOR	PJ19 IOR	PJ18 IOR	PJ17 IOR	PJ16 IOR
Initial value:	0	0	0	0	0	0	0	0	0	0	0	0	0	0	0	0
R/W:	R/W	R/W	R/W	R/W	R/W	R/W	R/W	R/W	R/W	R/W	R/W	R/W	R/W	R/W	R/W	R/W

(2) Port J IO Register 0 (PJIOR0)

Bit:	15	14	13	12	11	10	9	8	7	6	5	4	3	2	1	0
	PJ15 IOR	PJ14 IOR	PJ13 IOR	PJ12 IOR	PJ11 IOR	PJ10 IOR	PJ9 IOR	PJ8 IOR	PJ7 IOR	PJ6 IOR	PJ5 IOR	PJ4 IOR	PJ3 IOR	PJ2 IOR	PJ1 IOR	PJ0 IOR
Initial value:	0	0	0	0	0	0	0	0	0	0	0	0	0	0	0	0
R/W:	R/W	R/W	R/W	R/W	R/W	R/W	R/W	R/W	R/W	R/W	R/W	R/W	R/W	R/W	R/W	R/W

chanhvinh.com

48.2.32 Port J Data Registers 0, 1 (PJDR0, PJDR1: Available Only in the SH7269 Group)

PJDR0 and PJDR1 are 16-bit readable/writable registers that store port J data. The PJ31DR to PJ0DR bits correspond to the PJ31 to PJ0 pins, respectively.

When a pin function is general output, if a value is written to PJDR0 or PJDR1, that value is output from the pin, and if PJDR0 or PJDR1 is read, the register value is returned directly regardless of the pin state.

When a pin function is general input, if PJDR0 or PJDR1 is read, the pin state, not the register value, is returned directly. If a value is written to PJDR0 or PJDR1, although that value is written into PJDR0 or PJDR1, it does not affect the pin state. Table 48.19 summarizes PJDR0/PJDR1 read/write operation.

chanhvinh.com

(1) Port J Data Register 1 (PJDR1)

Bit:	15	14	13	12	11	10	9	8	7	6	5	4	3	2	1	0
	PJ31 DR	PJ30 DR	PJ29 DR	PJ28 DR	PJ27 DR	PJ26 DR	PJ25 DR	PJ24 DR	PJ23 DR	PJ22 DR	PJ21 DR	PJ20 DR	PJ19 DR	PJ18 DR	PJ17 DR	PJ16 DR
Initial value:	0	0	0	0	0	0	0	0	0	0	0	0	0	0	0	0
R/W:	R/W	R/W	R/W	R/W	R/W	R/W	R/W	R/W	R/W	R/W	R/W	R/W	R/W	R/W	R/W	R/W

Bit	Bit Name	Initial Value	R/W	Description
15	PJ31DR	0	R/W	See table 48.19
14	PJ30DR	0	R/W	
13	PJ29DR	0	R/W	
12	PJ28DR	0	R/W	
11	PJ27DR	0	R/W	
10	PJ26DR	0	R/W	
9	PJ25DR	0	R/W	
8	PJ24DR	0	R/W	
7	PJ23DR	0	R/W	
6	PJ22DR	0	R/W	
5	PJ21DR	0	R/W	
4	PJ20DR	0	R/W	
3	PJ19DR	0	R/W	
2	PJ18DR	0	R/W	
1	PJ17DR	0	R/W	
0	PJ16DR	0	R/W	

chanhvinh.com

(2) Port J Data Register 0 (PJDR0)

Bit:	15	14	13	12	11	10	9	8	7	6	5	4	3	2	1	0
	PJ15 DR	PJ14 DR	PJ13 DR	PJ12 DR	PJ11 DR	PJ10 DR	PJ9 DR	PJ8 DR	PJ7 DR	PJ6 DR	PJ5 DR	PJ4 DR	PJ3 DR	PJ2 DR	PJ1 DR	PJ0 DR
Initial value:	0	0	0	0	0	0	0	0	0	0	0	0	0	0	0	0
R/W:	R/W	R/W	R/W	R/W	R/W	R/W	R/W	R/W	R/W	R/W	R/W	R/W	R/W	R/W	R/W	R/W

Bit	Bit Name	Initial Value	R/W	Description
15	PJ15DR	0	R/W	See table 48.19
14	PJ14DR	0	R/W	
13	PJ13DR	0	R/W	
12	PJ12DR	0	R/W	
11	PJ11DR	0	R/W	
10	PJ10DR	0	R/W	
9	PJ9DR	0	R/W	
8	PJ8DR	0	R/W	
7	PJ7DR	0	R/W	
6	PJ6DR	0	R/W	
5	PJ5DR	0	R/W	
4	PJ4DR	0	R/W	
3	PJ3DR	0	R/W	
2	PJ2DR	0	R/W	
1	PJ1DR	0	R/W	
0	PJ0DR	0	R/W	

chanhvinh.com

Table 48.19 Port J Data Registers 1, 0 (PJDR1, PJDR0) Read/Write Operation

- Bits 15 to 0 of PJDR1 and bits 15 to 0 of PJDR0

PJIOR0, 1	Pin Function	Read Operation	Write Operation
0	General input	Pin state	Can write to PJDR0/PJDR1, but it has no effect on the pin state.
	Other than general input	Pin state	Can write to PJDR0/PJDR1, but it has no effect on the pin state.
1	General output	PJDR0/PJDR1 value	Value written is output from pin
	Other than general output	PJDR0/PJDR1 value	Can write to PJDR0/PJDR1, but it has no effect on the pin state

48.2.33 Port J Port Registers 0, 1 (PJPR0, PJPR1: Available Only in the SH7269 Group)

PJPR0 and PJPR1 are 16-bit read-only registers, in which the PJ31PR to PJ0PR bits correspond to the PJ31 to PJ0 pins, respectively. PJPR0 and PJPR1 always return the states of the pins regardless of the PJCR0 and PJCR1 settings.

(1) Port J Port Register 1 (PJPR1)

Bit:	15	14	13	12	11	10	9	8	7	6	5	4	3	2	1	0
	PJ31PR	PJ30PR	PJ29PR	PJ28PR	PJ27PR	PJ26PR	PJ25PR	PJ24PR	PJ23PR	PJ22PR	PJ21PR	PJ20PR	PJ19PR	PJ18PR	PJ17PR	PJ16PR
Initial value:	PJ31	PJ30	PJ29	PJ28	PJ27	PJ26	PJ25	PJ24	PJ23	PJ22	PJ21	PJ20	PJ19	PJ18	PJ17	PJ16
R/W:	R	R	R	R	R	R	R	R	R	R	R	R	R	R	R	R

chanhvinh.com

Bit	Bit Name	Initial Value	R/W	Description
15	PJ31PR	Pin state	R	The pin state is returned. These bits cannot be modified.
14	PJ30PR	Pin state	R	
13	PJ29PR	Pin state	R	
12	PJ28PR	Pin state	R	
11	PJ27PR	Pin state	R	
10	PJ26PR	Pin state	R	
9	PJ25PR	Pin state	R	
8	PJ24PR	Pin state	R	
7	PJ23PR	Pin state	R	
6	PJ22PR	Pin state	R	
5	PJ21PR	Pin state	R	
4	PJ20PR	Pin state	R	
3	PJ19PR	Pin state	R	
2	PJ18PR	Pin state	R	
1	PJ17PR	Pin state	R	
0	PJ16PR	Pin state	R	

chanhvinh.com

(2) Port J Port Register 0 (PJPR0)

Bit:	15	14	13	12	11	10	9	8	7	6	5	4	3	2	1	0
	PJ15 PR	PJ14 PR	PJ13 PR	PJ12 PR	PJ11 PR	PJ10 PR	PJ9 PR	PJ8 PR	PJ7 PR	PJ6 PR	PJ5 PR	PJ4 PR	PJ3 PR	PJ2 PR	PJ1 PR	PJ0 PR
Initial value:	PJ15	PJ14	PJ13	PJ12	PJ11	PJ10	PJ9	PJ8	PJ7	PJ6	PJ5	PJ4	PJ3	PJ2	PJ1	PJ0
R/W:	R	R	R	R	R	R	R	R	R	R	R	R	R	R	R	R

Bit	Bit Name	Initial Value	R/W	Description
15	PJ15PR	Pin state	R	The pin state is returned. These bits cannot be modified.
14	PJ14PR	Pin state	R	
13	PJ13PR	Pin state	R	
12	PJ12PR	Pin state	R	
11	PJ11PR	Pin state	R	
10	PJ10PR	Pin state	R	
9	PJ9PR	Pin state	R	
8	PJ8PR	Pin state	R	
7	PJ7PR	Pin state	R	
6	PJ6PR	Pin state	R	
5	PJ5PR	Pin state	R	
4	PJ4PR	Pin state	R	
3	PJ3PR	Pin state	R	
2	PJ2PR	Pin state	R	
1	PJ1PR	Pin state	R	
0	PJ0PR	Pin state	R	

chanhvinh.com

48.2.34 Serial Sound Interface Noise Canceler Control Register (SNCR)

SNCR is 16-bit readable/writable register that controls the noise canceler in the input route from the LSI pin to a serial sound interface. Each bit can be set only when slave mode is selected for the corresponding channel of the serial sound interface. The bit should be used as it is the initial value when master mode is selected for the corresponding channel of the serial sound interface.

Bit:	15	14	13	12	11	10	9	8	7	6	5	4	3	2	1	0
	-	-	-	-	-	-	-	-	-	-	SSI5 NCE	SSI4 NCE	SSI3 NCE	SSI2 NCE	SSI1 NCE	SSI0 NCE
Initial value:	0	0	0	0	0	0	0	0	0	0	0	0	0	0	0	0
R/W:	R	R	R	R	R	R	R	R	R	R	R/W	R/W	R/W	R/W	R/W	R/W

Bit	Bit Name	Initial Value	R/W	Description
15 to 6	—	All 0	R	Reserved These bits are always read as 0. The write value should always be 0.
5	SSI5NCE	0	R/W	Serial Sound Interface Channel 5 Noise Canceler Enable Enables or disables the noise canceler of SSISCK5, SSIWS5, and SSIDATA5. 0: Noise canceler is disabled. 1: Noise canceler is enabled.
4	SSI4NCE	0	R/W	Serial Sound Interface Channel 4 Noise Canceler Enable Enables or disables the noise canceler of SSISCK4, SSIWS4, and SSIDATA4. 0: Noise canceler is disabled. 1: Noise canceler is enabled.
3	SSI3NCE	0	R/W	Serial Sound Interface Channel 3 Noise Canceler Enable Enables or disables the noise canceler of SSISCK3, SSIWS3, and SSIDATA3. 0: Noise canceler is disabled. 1: Noise canceler is enabled.

chanhvinh.com

Bit	Bit Name	Initial Value	R/W	Description
2	SSI2NCE	0	R/W	Serial Sound Interface Channel 2 Noise Canceler Enable Enables or disables the noise canceler of SSISCK2, SSIWS2, and SSIDATA2. 0: Noise canceler is disabled. 1: Noise canceler is enabled.
1	SSI1NCE	0	R/W	Serial Sound Interface Channel 1 Noise Canceler Enable Enables or disables the noise canceler of SSISCK1, SSIWS1, and SSIDATA1. 0: Noise canceler is disabled. 1: Noise canceler is enabled.
0	SSI0NCE	0	R/W	Serial Sound Interface Channel 0 Noise Canceler Enable Enables or disables the noise canceler of SSISCK0, SSIWS0, and SSIRxD0. 0: Noise canceler is disabled. 1: Noise canceler is enabled.

chanhvinh.com

chanhvinh.com
chanhvinh.com
chanhvinh.com

chanhvinh.com

Section 49 Power-Down Modes

This LSI supports sleep mode, software standby mode, deep standby mode, and module standby mode. In power-down modes, functions of CPU, clocks, on-chip memory, or part of on-chip peripheral modules are halted or the power-supply is turned off, through which low power consumption is achieved. These modes are canceled by a reset or interrupt.

49.1 Features

49.1.1 Power-Down Modes

This LSI has the following power-down modes and function:

1. Sleep mode
2. Software standby mode
3. Deep standby mode
4. Module standby function

Table 49.1 shows the transition conditions for entering the modes from the program execution state, as well as the CPU and peripheral module states in each mode and the procedures for canceling each mode.

chanhvinh.com

Table 49.1 States of Power-Down Modes

		State*1									
Power-Down Mode	Transition Conditions	CPG	CPU	CPU Register	High-Speed On-Chip RAM Cache Memory	Large-Capacity On-Chip RAM (including on-chip data-retention RAM)	On-Chip Peripheral Modules	Realtime Clock	Power Supply	External Memory	Canceling Procedure
Sleep mode	Execute SLEEP instruction with STBY bit in STBCR1 cleared to 0	Running	Halted	Held	Running	Running	Running	Running*2	Running	Auto-refresh	• Interrupt • Manual reset • Power-on reset • DMA address error
Software standby mode	Execute SLEEP instruction with STBY bit in STBCR1 set to 1 and DEEP bit to 0	Halted	Halted	Held	Halted (contents are held*5*6)	Halted (contents are held*5*7)	Halted	Running*2	Running	Self-refresh	• NMI interrupt • IRQ interrupt • Power-on reset
Deep standby mode	Execute SLEEP instruction with STBY and DEEP bits in STBCR1 set to 1	Halted	Halted	Halted	Halted (contents are not held)	Halted (contents in on-chip data-retention RAM are held*3)	Halted	Running*2	Halted	Self-refresh	• NMI interrupt*4 • Power-on reset*4 • Realtime clock alarm interrupt*4 • Change on the pins for canceling*4

chanhvinh.com

		State*1									
Power-Down Mode	Transition Conditions	CPG	CPU	CPU Register	High-Speed On-Chip RAM Cache Memory	Large-Capacity On-Chip RAM (including on-chip data-retention RAM)	On-Chip Peripheral Modules	Realtime Clock	Power Supply	External Memory	Canceling Procedure
Module standby mode	Set the MSTP bits in STBCR2 to STBCR10 to 1	Running	Running	Held	Running	Running	Specified module halted	Halted	Running	Auto-refresh	• Clear MSTP bit to 0 • Power-on reset (only for the user debugging interface and direct memory access controller)

Notes:
1. The pin state is retained or set to high impedance. For details, see section 53.1, Pin States in section 53, States and Handling of Pins.
2. The realtime clock operates when the START bit in the RCR2 register is set to 1. For details, see section 15, Realtime Clock. When deep standby mode is canceled by a power-on reset, the running state cannot be retained. Make the initial setting for the realtime clock again.
3. Setting the bits RRAMKP3 to RRAMKP0 in the RRAMKP register to 1 enables to retain the data in the corresponding area on the on-chip data-retention RAM during the transition to deep standby. When the deep standby is canceled by a power-on reset, the retained contents are initialized.
4. Deep standby mode can be canceled by an interrupt (NMI or realtime clock alarm interrupt), a power-on reset, or change on the pins for canceling (PJ23 to PJ20, PG3, PG2, PF19 to PF16, PC7, and PC5). Even when deep standby mode is canceled by a source other than a reset, power-on reset exception handling is executed instead of interrupt exception handling. PJ23 to PJ20 can be used only in the SH7269 Group.
5. When software standby mode is canceled by a power-on reset, the retained contents are initialized.
6. By setting the RAME bit in SYSCR1 or RAMWE bit in SYSCR2 to disable accesses, contents in the high-speed on-chip RAM can be retained even when software standby mode is canceled by a power-on reset.
7. By setting the VRAME bit in SYSCR3 or VRAMWE bit in SYSCR4 to disable accesses, contents in the large-capacity on-chip RAM (including on-chip data-retention RAM) can be retained even when software standby mode is canceled by a power-on reset.

chanhvinh.com

49.2 Register Descriptions

Table 49.2 shows the register configuration.

Table 49.2 Register Configuration

Register Name	Abbreviation	R/W	Initial Value	Address	Access Size
Standby control register 1	STBCR1	R/W	H'00	H'FFFE0014	8
Standby control register 2	STBCR2	R/W	H'00	H'FFFE0018	8
Standby control register 3	STBCR3	R/W	H'7E	H'FFFE0408	8
Standby control register 4	STBCR4	R/W	H'FF	H'FFFE040C	8
Standby control register 5	STBCR5	R/W	H'FF	H'FFFE0410	8
Standby control register 6	STBCR6	R/W	H'FF	H'FFFE0414	8
Standby control register 7	STBCR7	R/W	H'FF	H'FFFE0418	8
Standby control register 8	STBCR8	R/W	H'FF	H'FFFE041C	8
Standby control register 9	STBCR9	R/W	H'FF	H'FFFE0440	8
Standby control register 10	STBCR10	R/W	H'7F	H'FFFE0444	8
Software reset control register 1	SWRSTCR1	R/W	H'00	H'FFFE0430	8
Software reset control register 2	SWRSTCR2	R/W	H'00	H'FFFE0434	8
System control register 1	SYSCR1	R/W	H'FF	H'FFFE0400	8
System control register 2	SYSCR2	R/W	H'FF	H'FFFE0404	8
System control register 3	SYSCR3	R/W	H'FF	H'FFFE0420	8
System control register 4	SYSCR4	R/W	H'FF	H'FFFE0424	8
System control register 5	SYSCR5	R/W	H'00	H'FFFE0428	8
On-chip data-retention RAM area setting register	RRAMKP	R/W	H'00	H'FFFE6800	8
Deep standby control register	DSCTR	R/W	H'00	H'FFFE6802	8
Deep standby cancel source select register	DSSSR	R/W	H'0000	H'FFFE6804	16
Deep standby cancel edge select register	DSESR	R/W	H'0000	H'FFFE6806	16
Deep standby cancel source flag register	DSFR	R/W	H'0000	H'FFFE6808	16
XTAL crystal oscillator gain control register	XTALCTR	R/W	H'00	H'FFFE6810	8

chanhvinh.com

49.2.1 Standby Control Register 1 (STBCR1)

STBCR1 is an 8-bit readable/writable register that specifies the state of the power-down mode.

Note: When writing to this register, see section 49.4, Usage Notes.

Bit:	7	6	5	4	3	2	1	0
	STBY	DEEP	-	-	-	-	-	-
Initial value:	0	0	0	0	0	0	0	0
R/W:	R/W	R/W	R	R	R	R	R	R

Bit	Bit Name	Initial Value	R/W	Description
7	STBY	0	R/W	Software Standby, Deep Standby
6	DEEP	0	R/W	Specifies transition to software standby mode or deep standby mode. 0x: Executing SLEEP instruction puts chip into sleep mode. 10: Executing SLEEP instruction puts chip into software standby mode. 11: Executing SLEEP instruction puts chip into deep standby mode.
5 to 0	—	All 0	R	Reserved These bits are always read as 0. The write value should always be 0.

[Legend]

x: Don't care

chanhvinh.com

49.2.2 Standby Control Register 2 (STBCR2)

STBCR2 is an 8-bit readable/writable register that controls the operation of each module.

Note: When writing to this register, see section 49.4, Usage Notes.

Bit:	7	6	5	4	3	2	1	0
	MSTP10	MSTP9	MSTP8	MSTP7	-	-	-	-
Initial value:	0	0	0	0	0	0	0	0
R/W:	R/W	R/W	R/W	R/W	R	R	R	R

Bit	Bit Name	Initial Value	R/W	Description
7	MSTP10	0	R/W	Module Stop 10 When the MSTP10 bit is set to 1, the clock supply to the user debugging interface is halted. 0: The user debugging interface runs. 1: Clock supply to the user debugging interface halted.
6	MSTP9	0	R/W	Module Stop 9 When the MSTP9 bit is set to 1, the clock supply to the user break controller is halted. 0: The user break controller runs. 1: Clock supply to the user break controller halted.
5	MSTP8	0	R/W	Module Stop 8 When the MSTP8 bit is set to 1, the clock supply to the direct memory access controller is halted. 0: The direct memory access controller runs. 1: Clock supply to the direct memory access controller halted. Note: Do not set this bit to 1 when using multifunction timer pulse unit 2, the compare-match timer, the serial communication interface with FIFO, the controller area network, the IEBus™ controller, the sound generator, or the motor control PWM timer.

chanhvinh.com

Bit	Bit Name	Initial Value	R/W	Description
4	MSTP7	0	R/W	Module Stop 7 When the MSTP7 bit is set to 1, the clock supply to the FPU is halted. After setting the MSTP7 bit to 1, the MSTP7 bit cannot be cleared by writing 0. This means that, after the clock supply to the FPU is halted by setting the MSTP7 bit to 1, the supply cannot be restarted by clearing the MSTP7 bit to 0. To restart the clock supply to the FPU after it was halted, reset the LSI by a power-on reset. 0: The FPU runs. 1: Clock supply to the FPU is halted.
3 to 0	—	All 0	R	Reserved These bits are always read as 0. The write value should always be 0.

49.2.3 Standby Control Register 3 (STBCR3)

STBCR3 is an 8-bit readable/writable register that controls the operation of each module.

Note: When writing to this register, see section 49.4, Usage Notes.

Bit:	7	6	5	4	3	2	1	0
	HIZ	MSTP 36	MSTP 35	-	-	MSTP 32	-	MSTP 30
Initial value:	0	1	1	1	1	1	1	0
R/W:	R/W	R/W	R/W	R	R	R/W	R	R/W

chanhvinh.com

Bit	Bit Name	Initial Value	R/W	Description
7	HIZ	0	R/W	Port High Impedance Selects whether the state of specific output pin is retained or high impedance in software standby mode or deep standby mode. As to which pins are controlled, see section 53.1, Pin States in section 53, States and Handling of Pins. This bit must not be set while the TME bit in WTSCR of the watchdog timer is 1. To set the output pin to high-impedance, set the HIZ bit to 1 only while the TME bit is 0. 0: The pin state is retained in software standby mode or deep standby mode. 1: The pin is set to high-impedance in software standby mode or deep standby mode.
6	MSTP36	1	R/W	Module Stop 36 When the MSTP36 bit is set to 1, the clock supply to the IEBus™ controller is halted. 0: The IEBus™ controller runs. 1: Clock supply to the IEBus™ controller is halted.
5	MSTP35	1	R/W	Module Stop 35 When the MSTP35 bit is set to 1, the clock supply to the multi-function timer pulse unit 2 is halted. 0: The multi-function timer pulse unit 2 runs. 1: Clock supply to the multi-function timer pulse unit 2 is halted.
4, 3	—	All 1	R	Reserved These bits are always read as 1. The write value should always be 1.

chanhvinh.com

Bit	Bit Name	Initial Value	R/W	Description
2	MSTP32	1	R/W	Module Stop 32 When the MSTP32 bit is set to 1, the clock supply to the AD converter is halted. 0: The AD converter runs. 1: Clock supply to the AD converter is halted.
1	—	1	R	Reserved This bit is always read as 1. The write value should always be 1.
0	MSTP30	0	R/W	Module Stop 30 When the MSTP30 bit is set to 1, the clock supply to the realtime clock is halted. 0: The realtime clock runs. 1: Clock supply to the realtime clock is halted. Note: When the realtime clock is halted, set the bits in registers shown below. • Set bit RTCEN in the control register 2 (RCR2) to 0. • Set bits RCKSEL[1:0] in the control register 5 (RCR5) to 00. After the settings above, set bit MSTP30 to 1.

49.2.4 Standby Control Register 4 (STBCR4)

STBCR4 is an 8-bit readable/writable register that controls the operation of each module.

Note: When writing to this register, see section 49.4, Usage Notes.

Bit:	7	6	5	4	3	2	1	0
	MSTP47	MSTP46	MSTP45	MSTP44	MSTP43	MSTP42	MSTP41	MSTP40
Initial value:	1	1	1	1	1	1	1	1
R/W:	R/W	R/W	R/W	R/W	R/W	R/W	R/W	R/W

chanhvinh.com

Bit	Bit Name	Initial Value	R/W	Description
7	MSTP47	1	R/W	Module Stop 47 When the MSTP47 bit is set to 1, the clock supply to channel 0 of the serial communication unit with FIFO is halted. 0: Channel 0 of the serial communication unit with FIFO runs. 1: Clock supply to channel 0 of the serial communication unit with FIFO is halted.
6	MSTP46	1	R/W	Module Stop 46 When the MSTP46 bit is set to 1, the clock supply to channel 1 of the serial communication unit with FIFO is halted. 0: Channel 1 of the serial communication unit with FIFO runs. 1: Clock supply to channel 1 of the serial communication unit with FIFO is halted.
5	MSTP45	1	R/W	Module Stop 45 When the MSTP45 bit is set to 1, the clock supply to channel 2 of the serial communication unit with FIFO is halted. 0: Channel 2 of the serial communication unit with FIFO runs. 1: Clock supply to channel 2 of the serial communication unit with FIFO is halted.
4	MSTP44	1	R/W	Module Stop 44 When the MSTP44 bit is set to 1, the clock supply to channel 3 of the serial communication unit with FIFO is halted. 0: Channel 3 of the serial communication unit with FIFO runs. 1: Clock supply to channel 3 of the serial communication unit with FIFO is halted.

chanhvinh.com

Bit	Bit Name	Initial Value	R/W	Description
3	MSTP43	1	R/W	Module Stop 43 When the MSTP43 bit is set to 1, the clock supply to channel 4 of the serial communication unit with FIFO is halted. 0: Channel 4 of the serial communication unit with FIFO runs. 1: Clock supply to channel 4 of the serial communication unit with FIFO is halted.
2	MSTP42	1	R/W	Module Stop 42 When the MSTP42 bit is set to 1, the clock supply to channel 5 of the serial communication unit with FIFO is halted. 0: Channel 5 of the serial communication unit with FIFO runs. 1: Clock supply to channel 5 of the serial communication unit with FIFO is halted.
1	MSTP41	1	R/W	Module Stop 41 When the MSTP41 bit is set to 1, the clock supply to channel 6 of the serial communication unit with FIFO is halted. 0: Channel 6 of the serial communication unit with FIFO runs. 1: Clock supply to channel 6 of the serial communication unit with FIFO is halted.
0	MSTP40	1	R/W	Module Stop 40 When the MSTP40 bit is set to 1, the clock supply to channel 7 of the serial communication unit with FIFO is halted. 0: Channel 7 of the serial communication unit with FIFO runs. 1: Clock supply to channel 7 of the serial communication unit with FIFO is halted.

chanhvinh.com

49.2.5 Standby Control Register 5 (STBCR5)

STBCR5 is an 8-bit readable/writable register that controls the operation of each module.

Note: When writing to this register, see section 49.4, Usage Notes.

Bit:	7	6	5	4	3	2	1	0
	MSTP57	MSTP56	MSTP55	MSTP54	MSTP53	MSTP52	MSTP51	MSTP50
Initial value:	1	1	1	1	1	1	1	1
R/W:	R/W	R/W	R/W	R/W	R/W	R/W	R/W	R/W

Bit	Bit Name	Initial Value	R/W	Description
7	MSTP57	1	R/W	Module Stop 57 When the MSTP57 bit is set to 1, the clock supply to channel 0 of the I^2C bus interface 3 is halted. 0: Channel 0 of the I^2C bus interface 3 runs. 1: Clock supply to channel 0 of the I^2C bus interface 3 is halted.
6	MSTP56	1	R/W	Module Stop 56 When the MSTP56 bit is set to 1, the clock supply to channel 1 of the I^2C bus interface 3 is halted. 0: Channel 1 of the I^2C bus interface 3 runs. 1: Clock supply to channel 1 of the I^2C bus interface 3 is halted.
5	MSTP55	1	R/W	Module Stop 55 When the MSTP55 bit is set to 1, the clock supply to channel 2 of the I^2C bus interface 3 is halted. 0: Channel 2 of the I^2C bus interface 3 runs. 1: Clock supply to channel 2 of the I^2C bus interface 3 is halted.
4	MSTP54	1	R/W	Module Stop 54 When the MSTP54 bit is set to 1, the clock supply to channel 3 of the I^2C bus interface 3 is halted. 0: Channel 3 of the I^2C bus interface 3 runs. 1: Clock supply to channel 3 of the I^2C bus interface 3 is halted.

chanhvinh.com

Bit	Bit Name	Initial Value	R/W	Description
3	MSTP53	1	R/W	Module Stop 53 When the MSTP53 bit is set to 1, the clock supply to channel 0 of the controller area network is halted. 0: Channel 0 of the controller area network runs. 1: Clock supply to channel 0 of the controller area network is halted.
2	MSTP52	1	R/W	Module Stop 52 When the MSTP52 bit is set to 1, the clock supply to channel 1 of the controller area network is halted. 0: Channel 1 of the controller area network runs. 1: Clock supply to channel 1 of the controller area network is halted.
1	MSTP51	1	R/W	Module Stop 51 When the MSTP51 bit is set to 1, the clock supply to channel 0 of the Renesas serial peripheral interface is halted. 0: Channel 0 of the Renesas serial peripheral interface runs. 1: Clock supply to channel 0 of the Renesas serial peripheral interface is halted.
0	MSTP50	1	R/W	Module Stop 50 When the MSTP50 bit is set to 1, the clock supply to channel 1 of the Renesas serial peripheral interface is halted. 0: Channel 1 of the Renesas serial peripheral interface runs. 1: Clock supply to channel 1 of the Renesas serial peripheral interface is halted.

chanhvinh.com

49.2.6 Standby Control Register 6 (STBCR6)

STBCR6 is an 8-bit readable/writable register that controls the operation of each module.

Note: When writing to this register, see section 49.4, Usage Notes.

Bit:	7	6	5	4	3	2	1	0
	MSTP 67	MSTP 66	MSTP 65	MSTP 64	MSTP 63	MSTP 62	MSTP 61	MSTP 60
Initial value:	1	1	1	1	1	1	1	1
R/W:	R/W	R/W	R/W	R/W	R/W	R/W	R/W	R/W

Bit	Bit Name	Initial Value	R/W	Description
7	MSTP67	1	R/W	Module Stop 67 When the MSTP67 bit is set to 1, the clock supply to channel 0 of the serial sound interface is halted. 0: Channel 0 of the serial sound interface runs. 1: Clock supply to channel 0 of the serial sound interface is halted.
6	MSTP66	1	R/W	Module Stop 66 When the MSTP66 bit is set to 1, the clock supply to channel 1 of the serial sound interface is halted. 0: Channel 1 of the serial sound interface runs. 1: Clock supply to channel 1 of the serial sound interface is halted.
5	MSTP65	1	R/W	Module Stop 65 When the MSTP65 bit is set to 1, the clock supply to channel 2 of the serial sound interface is halted. 0: Channel 2 of the serial sound interface runs. 1: Clock supply to channel 2 of the serial sound interface is halted.
4	MSTP64	1	R/W	Module Stop 64 When the MSTP64 bit is set to 1, the clock supply to channel 3 of the serial sound interface is halted. 0: Channel 3 of the serial sound interface runs. 1: Clock supply to channel 3 of the serial sound interface is halted.

chanhvinh.com

Bit	Bit Name	Initial Value	R/W	Description
3	MSTP63	1	R/W	Module Stop 63 When the MSTP63 bit is set to 1, the clock supply to the CD-ROM decoder is halted. 0: The CD-ROM decoder runs. 1: Clock supply to the CD-ROM decoder is halted.
2	MSTP62	1	R/W	Module Stop 62 When the MSTP62 bit is set to 1, the clock supply to channel 0 of the sampling rate converter is halted. 0: Channel 0 of the sampling rate converter runs. 1: Clock supply to channel 0 of the sampling rate converter is halted.
1	MSTP61	1	R/W	Module Stop 61 When the MSTP61 bit is set to 1, the clock supply to channel 1 of the sampling rate converter is halted. 0: Channel 1 of the sampling rate converter runs. 1: Clock supply to channel 1 of the sampling rate converter C is halted.
0	MSTP60	1	R/W	Module Stop 60 When the MSTP60 bit is set to 1, the clock supply to the USB 2.0 host/function module is halted. 0: The USB 2.0 host/function module runs. 1: Clock supply to the USB 2.0 host/function module is halted.

chanhvinh.com

49.2.7 Standby Control Register 7 (STBCR7)

STBCR7 is an 8-bit readable/writable register that controls the operation of each module.

Note: When writing to this register, see section 49.4, Usage Notes.

Bit:	7	6	5	4	3	2	1	0
	MSTP77	MSTP76	MSTP75	-	MSTP73	MSTP72	-	MSTP70
Initial value:	1	1	1	1	1	1	1	1
R/W:	R/W	R/W	R/W	R	R/W	R/W	R	R/W

Bit	Bit Name	Initial Value	R/W	Description
7	MSTP77	1	R/W	Module Stop 77 When the MSTP77 bit is set to 1, the clock supply to the clocked synchronous serial I/O with FIFO is halted. 0: The clocked synchronous serial I/O with FIFO runs. 1: Clock supply to the clocked synchronous serial I/O with FIFO is halted.
6	MSTP76	1	R/W	Module Stop 76 When the MSTP76 bit is set to 1, the clock supply to the Renesas SPDIF interface is halted. 0: The Renesas SPDIF interface runs. 1: Clock supply to the Renesas SPDIF interface is halted.
5	MSTP75	1	R/W	Module Stop 75 When the MSTP75 bit is set to 1, the clock supply to the SPI multi I/O bus controller is halted. 0: The SPI multi I/O bus controller runs. 1: Clock supply to the SPI multi I/O bus controller is halted.
4	—	1	R	Reserved This bit is always read as 1. The write value should always be 1.

chanhvinh.com

Bit	Bit Name	Initial Value	R/W	Description
3	MSTP73	1	R/W	Module Stop 73 When the MSTP73 bit is set to 1, the clock supply to the video display controller 4 is halted. 0: The video display controller 4 runs. 1: Clock supply to the video display controller 4 is halted.
2	MSTP72	1	R/W	Module Stop 72 When the MSTP72 bit is set to 1, the clock supply to the compare match timer is halted. 0: The compare match timer runs. 1: Clock supply to the compare match timer is halted.
1	—	1	R	Reserved This bit is always read as 1. The write value should always be 1.
0	MSTP70	1	R/W	Module Stop 70 When the MSTP70 bit is set to 1, the clock supply to the NAND flash memory controller is halted. 0: The NAND flash memory controller runs. 1: Clock supply to the NAND flash memory controller is halted.

chanhvinh.com

49.2.8 Standby Control Register 8 (STBCR8)

STBCR8 is an 8-bit readable/writable register that controls the operation of each module.

Note: When writing to this register, see section 49.4, Usage Notes.

Bit:	7	6	5	4	3	2	1	0
	MSTP87	MSTP86	MSTP85	MSTP84	-	MSTP82	MSTP81	-
Initial value:	1	1	1	1	1	1	1	1
R/W:	R/W	R/W	R/W	R/W	R	R/W	R/W	R

Bit	Bit Name	Initial Value	R/W	Description
7	MSTP87	1	R/W	Module Stop 87 When the MSTP87 bit is set to 1, the clock supply to the motor control PWM timer is halted. 0: The motor control PWM timer runs. 1: Clock supply to the motor control PWM timer is halted.
6	MSTP86	1	R/W	Module Stop 86 When the MSTP86 bit is set to 1, the clock supply to the MMC host interface is halted. 0: The MMC host interface runs. 1: Clock supply to the MMC host interface is halted.
5	MSTP85	1	R/W	Module Stop 85 When the MSTP85 bit is set to 1, the clock supply to the image renderer is halted. 0: The image renderer runs. 1: Clock supply to the image renderer is halted.
4	MSTP84	1	R/W	Module Stop 84 When the MSTP84 bit is set to 1, the clock supply to the OpenVG™-compliant Renesas graphics processor is halted. 0: The OpenVG™-compliant Renesas graphics processor runs. 1: Clock supply to the OpenVG™-compliant Renesas graphics processor is halted.

chanhvinh.com

Bit	Bit Name	Initial Value	R/W	Description
3	—	1	R	Reserved This bit is always read as 1. The write value should always be 1.
2	MSTP82	1	R/W	Module Stop 82 When the MSTP82 bit is set to 1, the clock supply to channel 0 of the Renesas quad serial peripheral interface is halted. 0: Channel 0 of the Renesas quad serial peripheral interface runs. 1: Clock supply to channel 0 of the Renesas quad serial peripheral interface is halted.
1	MSTP81	1	R/W	Module Stop 81 When the MSTP81 bit is set to 1, the clock supply to channel 1 of the Renesas quad serial peripheral interface is halted. 0: Channel 1 of the Renesas quad serial peripheral interface runs. 1: Clock supply to channel 1 of the Renesas quad serial peripheral interface is halted.
0	—	1	R	Reserved This bit is always read as 1. The write value should always be 1.

chanhvinh.com

49.2.9 Standby Control Register 9 (STBCR9)

STBCR9 is an 8-bit readable/writable register that controls the operation of each module.

Note: When writing to this register, see section 49.4, Usage Notes.

Bit:	7	6	5	4	3	2	1	0
	MSTP97	MSTP96	MSTP95	MSTP94	MSTP93	MSTP92	MSTP91	MSTP90
Initial value:	1	1	1	1	1	1	1	1
R/W:	R/W	R/W	R/W	R/W	R/W	R/W	R/W	R/W

Bit	Bit Name	Initial Value	R/W	Description
7	MSTP97	1	R/W	Module Stop 97 When the MSTP97 bit is set to 1, the clock supply to the SD host interface 00 is halted. 0: The SD host interface 00 runs. 1: Clock supply to the SD host interface 00 is halted.
6	MSTP96	1	R/W	Module Stop 96 When the MSTP96 bit is set to 1, the clock supply to the SD host interface 01 is halted. 0: The SD host interface 01 runs. 1: Clock supply to the SD host interface 01 is halted.
5	MSTP95	1	R/W	Module Stop 95 When the MSTP95 bit is set to 1, the clock supply to the SD host interface 10 is halted. 0: The SD host interface 10 runs. 1: Clock supply to the SD host interface 10 is halted.
4	MSTP94	1	R/W	Module Stop 94 When the MSTP94 bit is set to 1, the clock supply to the SD host interface 11 is halted. 0: The SD host interface 11 runs. 1: Clock supply to the SD host interface 11 is halted.

chanhvinh.com

Bit	Bit Name	Initial Value	R/W	Description
3	MSTP93	1	R/W	Module Stop 93 When the MSTP93 bit is set to 1, the clock supply to channel 4 of the serial sound interface is halted. 0: Channel 4 of the serial sound interface runs. 1: Clock supply to channel 4 of the serial sound interface is halted.
2	MSTP92	1	R/W	Module Stop 92 When the MSTP92 bit is set to 1, the clock supply to channel 5 of the serial sound interface is halted. 0: Channel 5 of the serial sound interface runs. 1: Clock supply to channel 5 of the serial sound interface is halted.
1	MSTP91	1	R/W	Module Stop 91 When the MSTP91 bit is set to 1, the clock supply to channel 2 of the sampling rate converter is halted. 0: Channel 2 of the sampling rate converter runs. 1: Clock supply to channel 2 of the sampling rate converter is halted.
0	MSTP90	1	R/W	Module Stop 90 When the MSTP90 bit is set to 1, the clock supply to channel 2 of the controller area network is halted. 0: Channel 2 of the controller area network runs. 1: Clock supply to channel 2 of the controller area network is halted.

chanhvinh.com

49.2.10 Standby Control Register 10 (STBCR10)

STBCR10 is an 8-bit readable/writable register that controls the operation of each module.

Note: When writing to this register, see section 49.4, Usage Notes.

Bit:	7	6	5	4	3	2	1	0
	MSTP 107	MSTP 106	MSTP 105	-	MSTP 103	MSTP 102	MSTP 101	MSTP 100
Initial value:	0	1	1	1	1	1	1	1
R/W:	R/W	R/W	R/W	R	R/W	R/W	R/W	R/W

Bit	Bit Name	Initial Value	R/W	Description
7	MSTP107	0	R/W	Module Stop 107 When the MSTP107 bit is set to 1, the clock supply to the digital video decoder is halted. 0: The digital video decoder runs. 1: Clock supply to the digital video decoder is halted.
6	MSTP106	1	R/W	Module Stop 106 When the MSTP106 bit is set to 1, the clock supply to the JPEG codec unit is halted. 0: The JPEG codec unit runs. 1: Clock supply to the JPEG codec unit is halted.
5	MSTP105	1	R/W	Module Stop 105 When the MSTP105 bit is set to 1, the clock supply to the display out comparison unit is halted. 0: The display out comparison unit runs. 1: Clock supply to the display out comparison unit is halted.
4	—	1	R	Reserved This bit is always read as 1. The write value should always be 1.

chanhvinh.com

Bit	Bit Name	Initial Value	R/W	Description
3	MSTP103	1	R/W	Module Stop 103 When the MSTP103 bit is set to 1, the clock supply to channel 0 of the sound generator is halted. 0: Channel 0 of the sound generator runs. 1: Clock supply to channel 0 of the sound generator is halted.
2	MSTP102	1	R/W	Module Stop 102 When the MSTP102 bit is set to 1, the clock supply to channel 1 of the sound generator is halted. 0: Channel 1 of the sound generator runs. 1: Clock supply to channel 1 of the sound generator is halted.
1	MSTP101	1	R/W	Module Stop 101 When the MSTP101 bit is set to 1, the clock supply to channel 2 of the sound generator is halted. 0: Channel 2 of the sound generator runs. 1: Clock supply to channel 2 of the sound generator is halted.
0	MSTP100	1	R/W	Module Stop 100 When the MSTP100 bit is set to 1, the clock supply to channel 3 of the sound generator is halted. 0: Channel 3 of the sound generator runs. 1: Clock supply to channel 3 of the sound generator is halted.

chanhvinh.com

49.2.11 Software Reset Control Register 1 (SWRSTCR1)

SWRSTCR1 is an 8-bit readable/writable register that controls a software reset for the serial sound interface and IEBus™ controller and the operation of the crystal resonator for audio.

Note: When writing to this register, see section 49.4, Usage Notes.

Bit:	7	6	5	4	3	2	1	0
	AXTALE	SSIF5SRST	SSIF4SRST	IEBSRST	SSIF3SRST	SSIF2SRST	SSIF1SRST	SSIF0SRST
Initial value:	0	0	0	0	0	0	0	0
R/W:	R/W	R/W	R/W	R/W	R/W	R/W	R/W	R/W

Bit	Bit Name	Initial Value	R/W	Description
7	AXTALE	0	R/W	AUDIO_X1 Clock Control Controls the function of AUDIO_X1 pin. 0: Runs the on-chip crystal oscillator/enables the external clock input. 1: Halts the on-chip crystal oscillator/disables the external clock input.
6	SSIF5SRST	0	R/W	Serial Sound Interface Channel 5 Software Reset Controls the serial sound interface channel 5 reset with software. 0: The serial sound interface channel 5 reset is canceled. 1: The serial sound interface channel 5 is reset.
5	SSIF4SRST	0	R/W	Serial Sound Interface Channel 4 Software Reset Controls the serial sound interface channel 4 reset with software. 0: The serial sound interface channel 4 reset is canceled. 1: The serial sound interface channel 4 is reset.
4	IEBSRST	0	R/W	IEBus™ Controller Software Reset Controls the IEBus™ controller reset with software. 0: The IEBus™ controller reset is canceled. 1: The IEBus™ controller is reset.

chanhvinh.com

Bit	Bit Name	Initial Value	R/W	Description
3	SSIF3SRST	0	R/W	Serial Sound Interface Channel 3 Software Reset Controls the serial sound interface channel 3 reset with software. 0: The serial sound interface channel 3 reset is canceled. 1: The serial sound interface channel 3 is reset.
2	SSIF2SRST	0	R/W	Serial Sound Interface Channel 2 Software Reset Controls the serial sound interface channel 2 reset with software. 0: The serial sound interface channel 2 reset is canceled. 1: The serial sound interface channel 2 is reset.
1	SSIF1SRST	0	R/W	Serial Sound Interface Channel 1 Software Reset Controls the serial sound interface channel 1 reset with software. 0: The serial sound interface channel 1 reset is canceled. 1: The serial sound interface channel 1 is reset.
0	SSIF0SRST	0	R/W	Serial Sound Interface Channel 0 Software Reset Controls the serial sound interface channel 0 reset with software. 0: The serial sound interface channel 0 reset is canceled. 1: The serial sound interface channel 0 is reset.

chanhvinh.com

49.2.12 Software Reset Control Register 2 (SWRSTCR2)

SWRSTCR2 is an 8-bit readable/writable register that controls a software reset for each module.

Note: When writing to this register, see section 49.4, Usage Notes.

Bit:	7	6	5	4	3	2	1	0
	-	-	-	JCU SRST	RGPV GSRST	-	-	VDC4 SRST
Initial value:	0	0	0	0	0	0	0	0
R/W:	R	R	R	R/W	R/W	R	R	R/W

Bit	Bit Name	Initial Value	R/W	Description
7 to 5	—	All 0	R	Reserved These bits are always read as 0. The write value should always be 0.
4	JCUSRST	0	R/W	JPEG Codec Unit Software Reset Controls the JPEG codec unit reset with software. 0: The JPEG codec unit reset is canceled. 1: The JPEG codec unit is reset.
3	RGPVGSRST	0	R/W	OpenVG™-Compliant Renesas Graphics Processor Software Reset Controls the OpenVG™-compliant Renesas graphics processor reset with software. 0: The OpenVG™-compliant Renesas graphics processor reset is canceled. 1: The OpenVG™-compliant Renesas graphics processor is reset.
2, 1	—	All 0	R	Reserved These bits are always read as 0. The write value should always be 0.
0	VDC4SRST	0	R/W	Video Display Controller 4 Software Reset Controls the Video display controller 4 reset with software. 0: The Video display controller 4 reset is canceled. 1: The Video display controller 4 is reset.

chanhvinh.com

49.2.13 System Control Register 1 (SYSCR1)

SYSCR1 is an 8-bit readable/writable register that enables or disables access (read and write) to a specified page in the high-speed on-chip RAM.

When an RAMEn (n = 0 to 3) bit is set to 1, access to page n is enabled. When an RAMEn bit is cleared to 0, page n cannot be accessed. In this case, an undefined value is returned when reading data or fetching an instruction from page n, and writing to page n is ignored. The initial value of an RAMEn bit is 1.

Note that when clearing the RAMEn bit to 0, be sure to execute an instruction to read from or write to the same arbitrary address in each page before setting the RAMEn bit. If such an instruction is not executed, the data last written to page n may not be written to the high-speed on-chip RAM.

SYSCR1 should be set with a program located in an area other than the high-speed on-chip RAM. Furthermore, an instruction to read SYSCR1 should be located immediately after the instruction to write to SYSCR1. If not, normal access is not guaranteed.

Note: When writing to this register, see section 49.4, Usage Notes.

Bit:	7	6	5	4	3	2	1	0
	-	-	-	-	RAME3	RAME2	RAME1	RAME0
Initial value:	1	1	1	1	1	1	1	1
R/W:	R	R	R	R	R/W	R/W	R/W	R/W

Bit	Bit Name	Initial Value	R/W	Description
7 to 4	—	All 1	R	Reserved These bits are always read as 1. The write value should always be 1.
3	RAME3	1	R/W	RAM Enable 3 (corresponding area: page 3* in high-speed on-chip RAM) 0: Access to page 3 is disabled. 1: Access to page 3 is enabled.
2	RAME2	1	R/W	RAM Enable 2 (corresponding area: page 2* in high-speed on-chip RAM) 0: Access to page 2 is disabled. 1: Access to page 2 is enabled.

chanhvinh.com

Bit	Bit Name	Initial Value	R/W	Description
1	RAME1	1	R/W	RAM Enable 1 (corresponding area: page 1* in high-speed on-chip RAM) 0: Access to page 1 is disabled. 1: Access to page 1 is enabled.
0	RAME0	1	R/W	RAM Enable 0 (corresponding area: page 0* in high-speed on-chip RAM) 0: Access to page 0 is disabled. 1: Access to page 0 is enabled.

Note: * For addresses in each page, see section 47, On-Chip RAM.

49.2.14 System Control Register 2 (SYSCR2)

SYSCR2 is an 8-bit readable/writable register that enables or disables writing to a specified page in the high-speed on-chip RAM.

When an RAMWEn (n = 0 to 3) bit is set to 1, writing to page n is enabled. When an RAMWEn bit is cleared to 0,writing to page n is ignored. The initial value of an RAMWEn bit is 1.

Note that when clearing the RAMWEn bit to 0, be sure to execute an instruction to read from or write to the same arbitrary address in each page before setting the RAMWEn bit. If such an instruction is not executed, the data last written to page n may not be written to the high-speed on-chip RAM.

SYSCR2 should be set with a program located in an area other than the high-speed on-chip RAM. Furthermore, an instruction to read SYSCR2 should be located immediately after the instruction to write to SYSCR2. If not, normal access is not guaranteed.

Note: When writing to this register, see section 49.4, Usage Notes.

Bit:	7	6	5	4	3	2	1	0
	-	-	-	-	RAM WE3	RAM WE2	RAM WE1	RAM WE0
Initial value:	1	1	1	1	1	1	1	1
R/W:	R	R	R	R	R/W	R/W	R/W	R/W

chanhvinh.com

Bit	Bit Name	Initial Value	R/W	Description
7 to 4	—	All 1	R	Reserved These bits are always read as 1. The write value should always be 1.
3	RAMWE3	1	R/W	RAM Write Enable 3 (corresponding area: page 3* in high-speed on-chip RAM) 0: Writing to page 3 is disabled. 1 Writing to page 3 is enabled.
2	RAMWE2	1	R/W	RAM Write Enable 2 (corresponding area: page 2* in high-speed on-chip RAM) 0: Writing to page 2 is disabled. 1: Writing to page 2 is enabled.
1	RAMWE1	1	R/W	RAM Write Enable 1 (corresponding area: page 1* in high-speed on-chip RAM) 0: Writing to page 1 is disabled. 1: Writing to page 1 is enabled.
0	RAMWE0	1	R/W	RAM Write Enable 0 (corresponding area: page 0* in high-speed on-chip RAM) 0: Writing to page 0 is disabled. 1: Writing to page 0 is enabled.

Note: * For addresses in each page, see section 47, On-Chip RAM.

49.2.15 System Control Register 3 (SYSCR3)

SYSCR3 is an 8-bit readable/writable register that enables or disables access (read and write) to a specified page in the large-capacity on-chip RAM.

When a VRAMEn (n = 0 to 5) bit is set to 1, access to page n is enabled. When a VRAMEn bit is cleared to 0, page n cannot be accessed. In this case, an undefined value is returned when reading data or fetching an instruction from page n, and writing to page n is ignored. The initial value of a VRAMEn bit is 1.

SYSCR3 should be set with a program located in an area other than the large-capacity on-chip RAM. Furthermore, an instruction to read SYSCR3 should be located immediately after the instruction to write to SYSCR3. If not, normal access is not guaranteed.

Note: When writing to this register, see section 49.4, Usage Notes.

chanhvinh.com

Bit:	7	6	5	4	3	2	1	0
	-	-	VRAME5	VRAME4	VRAME3	VRAME2	VRAME1	VRAME0
Initial value:	1	1	1	1	1	1	1	1
R/W:	R	R	R/W	R/W	R/W	R/W	R/W	R/W

Bit	Bit Name	Initial Value	R/W	Description
7, 6	—	All 1	R	Reserved These bits are always read as 1. The write value should always be 1.
5	VRAME5	1	R/W	RAM Enable 5 (corresponding area: page 5* in large-capacity on-chip RAM) 0: Access to page 5 is disabled. 1: Access to page 5 is enabled.
4	VRAME4	1	R/W	RAM Enable 4 (corresponding area: page 4* in large-capacity on-chip RAM) 0: Access to page 4 is disabled. 1: Access to page 4 is enabled.
3	VRAME3	1	R/W	RAM Enable 3 (corresponding area: page 3* in large-capacity on-chip RAM) 0: Access to page 3 is disabled. 1: Access to page 3 is enabled.
2	VRAME2	1	R/W	RAM Enable 2 (corresponding area: page 2* in large-capacity on-chip RAM 0: Access to page 2 is disabled. 1: Access to page 2 is enabled.
1	VRAME1	1	R/W	RAM Enable 1 (corresponding area: page 1* in large-capacity on-chip RAM 0: Access to page 1 is disabled. 1: Access to page 1 is enabled.
0	VRAME0	1	R/W	RAM Enable 0 (corresponding area: page 0* in large-capacity on-chip RAM) 0: Access to page 0 is disabled. 1: Access to page 0 is enabled.

Note: * For addresses in each page, see section 47, On-Chip RAM.

chanhvinh.com

49.2.16 System Control Register 4 (SYSCR4)

SYSCR4 is an 8-bit readable/writable register that enables or disables writing to a specified page in the large-capacity on-chip RAM.

When a VRAMWEn (n = 0 to 5) bit is set to 1, writing to page n is enabled. When a VRAMWEn bit is cleared to 0, writing to page n is ignored. The initial value of a VRAMWEn bit is 1.

SYSCR4 should be set with a program located in an area other than the large-capacity on-chip RAM. Furthermore, an instruction to read SYSCR4 should be located immediately after the instruction to write to SYSCR4. If not, normal access is not guaranteed.

Note: When writing to this register, see section 49.4, Usage Notes.

Bit:	7	6	5	4	3	2	1	0
	-	-	VRAM WE5	VRAM WE4	VRAM WE3	VRAM WE2	VRAM WE1	VRAM WE0
Initial value:	1	1	1	1	1	1	1	1
R/W:	R	R	R/W	R/W	R/W	R/W	R/W	R/W

Bit	Bit Name	Initial Value	R/W	Description
7, 6	—	All 1	R	Reserved These bits are always read as 1. The write value should always be 1.
5	VRAMWE5	1	R/W	RAM Write Enable 5 (corresponding area: page 5* in large-capacity on-chip RAM) 0: Writing to page 5 is disabled. 1: Writing to page 5 is enabled.
4	VRAMWE4	1	R/W	RAM Write Enable 4 (corresponding area: page 4* in large-capacity on-chip RAM) 0: Writing to page 4 is disabled. 1: Writing to page 4 is enabled.
3	VRAMWE3	1	R/W	RAM Write Enable 3 (corresponding area: page 3* in large-capacity on-chip RAM) 0: Writing to page 3 is disabled. 1: Writing to page 3 is enabled.

chanhvinh.com

Bit	Bit Name	Initial Value	R/W	Description
2	VRAMWE2	1	R/W	RAM Write Enable 2 (corresponding area: page 2* in large-capacity on-chip RAM 0: Writing to page 2 is disabled. 1: Writing to page 2 is enabled.
1	VRAMWE1	1	R/W	RAM Write Enable 1 (corresponding area: page 1* in large-capacity on-chip RAM 0: Writing to page 1 is disabled. 1: Writing to page 1 is enabled.
0	VRAMWE0	1	R/W	RAM Write Enable 0 (corresponding area: page 0* in large-capacity on-chip RAM) 0: Writing to page 0 is disabled. 1: Writing to page 0 is enabled.

Note: * For addresses in each page, see section 47, On-Chip RAM.

49.2.17 System Control Register 5 (SYSCR5)

SYSCR5 is an 8-bit readable/writable register that enables or disables writing to a specified page in the on-chip data-retention RAM.

When a RRAMWEn (n = 0 to 3) bit in SYSCR5 is set to 1, writing to page n is enabled. When a RRAMWEn bit is cleared to 0, writing to page n is ignored. The initial value of a RRAMWEn bit is 0.

SYSCR5 should be set with a program located in an area other than the on-chip data-retention RAM.

Note: When writing to this register, see section 49.4, Usage Notes.

Bit:	7	6	5	4	3	2	1	0
	-	-	-	-	RRAM WE3	RRAM WE2	RRAM WE1	RRAM WE0
Initial value:	0	0	0	0	0	0	0	0
R/W:	R	R	R	R	R/W	R/W	R/W	R/W

chanhvinh.com

Bit	Bit Name	Initial Value	R/W	Description
7 to 4	—	All 0	R	Reserved These bits are always read as 0. The write value should always be 0.
3	RRAMWE3	0	R/W	RAM Write Enable 3 (corresponding area: page 3*[2] in on-chip data-retention RAM) 0: Writing to page 3 is disabled. 1: Writing to page 3 is enabled.
2	RRAMWE2	0	R/W	RAM Write Enable 2 (corresponding area: page 2*[2] in on-chip data-retention RAM 0: Writing to page 2 is disabled. 1: Writing to page 2 is enabled.
1	RRAMWE1	0	R/W	RAM Write Enable 1 (corresponding area: page 1*[2] in on-chip data-retention RAM 0: Writing to page 1 is disabled. 1: Writing to page 1 is enabled.
0	RRAMWE0	0	R/W	RAM Write Enable 0 (corresponding area: page 0*[2] in on-chip data-retention RAM) 0: Writing to page 0 is disabled. 1: Writing to page 0 is enabled.

Notes: 1. For addresses in each page, see section 47, On-Chip RAM.
2. When the VRAME0 bit in SYSCR3 is cleared to 0 (access to page 0 in large-capacity on-chip RAM is invalid), the on-chip data-retention RAM cannot be accessed (read and written), regardless of the setting of this bit.
When the VRAMWE0 bit in SYSCR4 is cleared to 0 (writing to page 0 in large-capacity on-chip RAM is invalid), the on-chip data-retention RAM cannot be written, regardless of the setting of this bit.

chanhvinh.com

49.2.18 On-Chip Data-Retention RAM Area Setting Register (RRAMKP)

RRAMKP is an 8-bit readable/writable register that selects whether the contents of the corresponding area of the on-chip data-retention RAM are retained or not in deep standby mode.

When the RRAMKP3 to RRAMKP0 bits are set to 1, the contents of the corresponding area of the on-chip data-retention RAM are retained in deep standby mode. When these bits are cleared to 0, the contents of the corresponding area of the on-chip data-retention RAM are not retained in deep standby mode.

Note: When writing to this register, see section 49.4, Usage Notes.

Bit:	7	6	5	4	3	2	1	0
	-	-	-	-	RRAM KP3	RRAM KP2	RRAM KP1	RRAM KP0
Initial value:	0	0	0	0	0	0	0	0
R/W:	R	R	R	R	R/W	R/W	R/W	R/W

Bit	Bit Name	Initial Value	R/W	Description
7 to 4	—	All 0	R	Reserved These bits are always read as 0. The write value should always be 0.
3	RRAMKP3	0	R/W	On-Chip Data-Retention RAM Storage Area 3 (corresponding area: page 3* in on-chip data-retention RAM) 0: The contents of the on-chip data-retention RAM are not retained in deep standby mode. 1: The contents of the on-chip data-retention RAM are retained in deep standby mode.
2	RRAMKP2	0	R/W	On-Chip Data-Retention RAM Storage Area 2 (corresponding area: page 2* in on-chip data-retention RAM) 0: The contents of the on-chip data-retention RAM are not retained in deep standby mode. 1: The contents of the on-chip data-retention RAM are retained in deep standby mode.

chanhvinh.com

Bit	Bit Name	Initial Value	R/W	Description
1	RRAMKP1	0	R/W	On-Chip Data-Retention RAM Storage Area 1 (corresponding area: page 1* in on-chip data-retention RAM) 0: The contents of the on-chip data-retention RAM are not retained in deep standby mode. 1: The contents of the on-chip data-retention RAM are retained in deep standby mode.
0	RRAMKP0	0	R/W	On-Chip Data-Retention RAM Storage Area 0 (corresponding area: page 0* in on-chip data-retention RAM) 0: The contents of the on-chip data-retention RAM are not retained in deep standby mode. 1: The contents of the on-chip data-retention RAM are retained in deep standby mode.

Note: * For addresses in each page, see section 47, On-Chip RAM.

49.2.19 Deep Standby Control Register (DSCTR)

DSCTR is an 8-bit readable/writable register that selects whether the states of the external memory control pins are retained or not when returning from deep standby mode and specifies the method to start the LSI.

Note: When writing to this register, see section 49.4, Usage Notes.

Bit:	7	6	5	4	3	2	1	0
	EBUS KEEPE	RAM BOOT	-	-	-	-	-	-
Initial value:	0	0	0	0	0	0	0	0
R/W:	R/W	R/W	R	R	R	R	R	R

chanhvinh.com

Bit	Bit Name	Initial Value	R/W	Description
7	EBUSKEEPE	0	R/W	Retention of External Memory Control Pin State 0: The state of the external memory control pins is not retained when returning from deep standby mode. 1: The state of the external memory control pins is retained when returning from deep standby mode.
6	RAMBOOT	0	R/W	Selection of Method after Returning from Deep Standby Mode Selects an activation method after returning from deep standby mode. 0: Activated according to the boot mode specified for a reset. 1: The program is read from the on-chip data-retention RAM. Program counter (PC): H'1C000000 Stack pointer (SP): H'1C000004
5 to 0	—	All 0	R	Reserved These bits are always read as 0. The write value should always be 0.

chanhvinh.com

49.2.20 Deep Standby Cancel Source Select Register (DSSSR)

DSSSR is a 16-bit readable/writable register that consists of the bits for selecting a source to cancel deep standby mode. The realtime clock alarm interrupt or change on the pins for canceling (PJ23 to PJ20, PG3, PG2, PF19 to PF16, PC7, and PC5) can be selected as a cancel source. The pins for canceling can be used for canceling deep standby, regardless of pin function settings in the general I/O port.

Note: When writing to this register, see section 49.4, Usage Notes.

Bit:	15	14	13	12	11	10	9	8	7	6	5	4	3	2	1	0
	-	PJ23	PJ22	PJ21	PJ20	PG3	PG2	NMI	-	RTCAR	PF19	PF18	PF17	PF16	PC7	PC5
Initial value:	0	0	0	0	0	0	0	0	0	0	0	0	0	0	0	0
R/W:	R	R/W	R/W	R/W	R/W	R/W	R/W	R/W	R	R/W	R/W	R/W	R/W	R/W	R/W	R/W

Bit	Bit Name	Initial Value	R/W	Description
15	—	0	R	Reserved This bit is always read as 0. The write value should always be 0.
14	PJ23	0	R/W	Cancel by Change on PJ23 0: Deep standby mode is not canceled by change on the PJ23 pin. 1: Deep standby mode is canceled by change on the PJ23 pin. Note: This bit can be used only in the SH7269 Group.
13	PJ22	0	R/W	Cancel by Change on PJ22 0: Deep standby mode is not canceled by change on the PJ22 pin. 1: Deep standby mode is canceled by change on the PJ22 pin. Note: This bit can be used only in the SH7269 Group.
12	PJ21	0	R/W	Cancel by Change on PJ21 0: Deep standby mode is not canceled by change on the PJ21 pin. 1: Deep standby mode is canceled by change on the PJ21 pin. Note: This bit can be used only in the SH7269 Group.

chanhvinh.com

Bit	Bit Name	Initial Value	R/W	Description
11	PJ20	0	R/W	Cancel by Change on PJ20 0: Deep standby mode is not canceled by change on the PJ20 pin. 1: Deep standby mode is canceled by change on the PJ20 pin. Note: This bit can be used only in the SH7269 Group.
10	PG3	0	R/W	Cancel by Change on PG3 0: Deep standby mode is not canceled by change on the PG3 pin. 1: Deep standby mode is canceled by change on the PG3 pin.
9	PG2	0	R/W	Cancel by Change on PG2 0: Deep standby mode is not canceled by change on the PG2 pin. 1: Deep standby mode is canceled by change on the PG2 pin.
8	NMI	0	R/W	Cancel by Change on NMI 0: Deep standby mode is not canceled by change on the NMI pin. 1: Deep standby mode is canceled by change on the NMI pin.
7	—	0	R	Reserved This bit is always read as 0. The write value should always be 0.
6	RTCAR	0	R/W	Cancel by Realtime Clock Alarm Interrupt 0: Deep standby mode is not canceled by a realtime clock alarm interrupt. 1: Deep standby mode is canceled by a realtime clock alarm interrupt.
5	PF19	0	R/W	Cancel by Change on PF19 0: Deep standby mode is not canceled by change on the PF19 pin. 1: Deep standby mode is canceled by change on the PF19 pin.

chanhvinh.com

Bit	Bit Name	Initial Value	R/W	Description
4	PF18	0	R/W	Cancel by Change on PF18 0: Deep standby mode is not canceled by change on the PF18 pin. 1: Deep standby mode is canceled by change on the PF18 pin.
3	PF17	0	R/W	Cancel by Change on PF17 0: Deep standby mode is not canceled by change on the PF17 pin. 1: Deep standby mode is canceled by change on the PF17 pin.
2	PF16	0	R/W	Cancel by Change on PF16 0: Deep standby mode is not canceled by change on the PF16 pin. 1: Deep standby mode is canceled by change on the PF16 pin.
1	PC7	0	R/W	Cancel by Change on PC7 0: Deep standby mode is not canceled by change on the PC7 pin. 1: Deep standby mode is canceled by change on the PC7 pin.
0	PC5	0	R/W	Cancel by Change on PC5 0: Deep standby mode is not canceled by change on the PC5 pin. 1: Deep standby mode is canceled by change on the PC5 pin.

chanhvinh.com

49.2.21 Deep Standby Cancel Edge Select Register (DSESR)

DSESR is a 16-bit readable/writable register that consists of the bits for selecting an edge to be detected for the pin specified as a deep standby cancel source with DSSSR. This register setting is always valid for canceling deep standby, regardless of the interrupt controller setting.

Note: When writing to this register, see section 49.4, Usage Notes.

Bit:	15	14	13	12	11	10	9	8	7	6	5	4	3	2	1	0
	-	PJ23E	PJ22E	PJ21E	PJ20E	PG3E	PG2E	NMIE	-	-	PF19E	PF18E	PF17E	PF16E	PC7E	PC5E
Initial value:	0	0	0	0	0	0	0	0	0	0	0	0	0	0	0	0
R/W:	R	R/W	R/W	R/W	R/W	R/W	R/W	R/W	R	R	R/W	R/W	R/W	R/W	R/W	R/W

Bit	Bit Name	Initial Value	R/W	Description
15	—	0	R	Reserved This bit is always read as 0. The write value should always be 0.
14	PJ23E	0	R/W	PJ23 Edge Detection 0: Falling edge of PJ23 is detected. 1: Rising edge of PJ23 is detected. Note: This bit can be used only in the SH7269 Group.
13	PJ22E	0	R/W	PJ22 Edge Detection 0: Falling edge of PJ22 is detected. 1: Rising edge of PJ22 is detected. Note: This bit can be used only in the SH7269 Group.
12	PJ21E	0	R/W	PJ21 Edge Detection 0: Falling edge of PJ21 is detected. 1: Rising edge of PJ21 is detected. Note: This bit can be used only in the SH7269 Group.
11	PJ20E	0	R/W	PJ20 Edge Detection 0: Falling edge of PJ20 is detected. 1: Rising edge of PJ20 is detected. Note: This bit can be used only in the SH7269 Group.

chanhvinh.com

Bit	Bit Name	Initial Value	R/W	Description
10	PG3E	0	R/W	PG3 Edge Detection 0: Falling edge of PG3 is detected. 1: Rising edge of PG3 is detected.
9	PG2E	0	R/W	PG2 Edge Detection 0: Falling edge of PG2 is detected. 1: Rising edge of PG2 is detected.
8	NMIE	0	R/W	NMI Edge Detection 0: Falling edge of NMI is detected. 1: Rising edge of NMI is detected.
7, 6	—	All 0	R	Reserved These bits are always read as 0. The write value should always be 0.
5	PF19E	0	R/W	PF19 Edge Detection 0: Falling edge of PF19 is detected. 1: Rising edge of PF19 is detected.
4	PF18E	0	R/W	PF18 Edge Detection 0: Falling edge of PF18 is detected. 1: Rising edge of PF18 is detected.
3	PF17E	0	R/W	PF17 Edge Detection 0: Falling edge of PF17 is detected. 1: Rising edge of PF17 is detected.
2	PF16E	0	R/W	PF16 Edge Detection 0: Falling edge of PF16 is detected. 1: Rising edge of PF16 is detected.
1	PC7E	0	R/W	PC7 Edge Detection 0: Falling edge of PC7 is detected. 1: Rising edge of PC7 is detected.
0	PC5E	0	R/W	PC5 Edge Detection 0: Falling edge of PC5 is detected. 1: Rising edge of PC5 is detected.

chanhvinh.com

49.2.22 Deep Standby Cancel Source Flag Register (DSFR)

DSFR is a 16-bit readable/writable register composed of two types of bits. One is the flag that confirms which source canceled deep standby mode. The other is the bit that releases the state of pins after canceling deep standby mode. When deep standby mode is canceled by an interrupt (NMI, realtime clock alarm interrupt, or change on the pins for canceling) and changes on the pins for canceling, this register retains the previous data although power-on reset exception handling is executed. When deep standby mode is canceled by a power-on reset, this register is initialized to H'0000.

All flags must be cleared immediately before transition to deep standby mode.

Note: When writing to this register, see section 49.4, Usage Notes.

Bit:	15	14	13	12	11	10	9	8	7	6	5	4	3	2	1	0
	IO KEEP	PJ23F	PJ22F	PJ21F	PJ20F	PG3F	PG2F	NMIF	-	RTC ARF	PF19F	PF18F	PF17F	PF16F	PC7F	PC5F
Initial value:	0	0	0	0	0	0	0	0	0	0	0	0	0	0	0	0
R/W:	R/(W)*	R/(W)*	R/(W)*	R/(W)*	R/(W)*	R/(W)*	R/(W)*	R/(W)*	R	R/(W)*	R/(W)*	R/(W)*	R/(W)*	R/(W)*	R/(W)*	R/(W)*

Note: * Only 0 can be written after reading 1 to clear the flag.

Bit	Bit Name	Initial Value	R/W	Description
15	IOKEEP	0	R/(W)*	Release of Pin State Retention Releases the retention of the pin state after canceling deep standby mode 0: Pin state not retained [Clearing condition] • Writing 0 after reading 1 1: Pin state retained [Setting condition] • When deep standby mode is entered
14	PJ23F	0	R/(W)*	PJ23 Flag 0: No change on the PJ23 pin 1: Change on the PJ23 pin Note: This bit can be used only in the SH7269 Group.

chanhvinh.com

Bit	Bit Name	Initial Value	R/W	Description
13	PJ22F	0	R/(W)*	PJ22 Flag 0: No change on the PJ22 pin 1: Change on the PJ22 pin Note: This bit can be used only in the SH7269 Group.
12	PJ21F	0	R/(W)*	PJ21 Flag 0: No change on the PJ21 pin 1: Change on the PJ21 pin Note: This bit can be used only in the SH7269 Group.
11	PJ20F	0	R/(W)*	PJ20 Flag 0: No change on the PJ20 pin 1: Change on the PJ20 pin Note: This bit can be used only in the SH7269 Group.
10	PG3F	0	R/(W)*	PG3 Flag 0: No change on the PG3 pin 1: Change on the PG3 pin
9	PG2F	0	R/(W)*	PG2 Flag 0: No change on the PG2 pin 1: Change on the PG2 pin
8	NMIF	0	R/(W)*	NMI Flag 0: No interrupt on NMI pin 1: Interrupt on NMI pin
7	—	0	R	Reserved This bit is always read as 0. The write value should always be 0.
6	RTCARF	0	R/(W)*	RTCAR Flag 0: No realtime clock alarm interrupt generated 1: Realtime clock alarm Interrupt generated
5	PF19F	0	R/(W)*	PF19 Flag 0: No change on the PF19 pin 1: Change on the PF19 pin

chanhvinh.com

Bit	Bit Name	Initial Value	R/W	Description
4	PF18F	0	R/(W)*	PF18 Flag 0: No change on the PF18 pin 1: Change on the PF18 pin
3	PF17F	0	R/(W)*	PF17 Flag 0: No change on the PF17 pin 1: Change on the PF17 pin
2	PF16F	0	R/(W)*	PF16 Flag 0: No change on the PF16 pin 1: Change on the PF16 pin
1	PC7F	0	R/(W)*	PC7 Flag 0: No change on the PC7 pin 1: Change on the PC7 pin
0	PC5F	0	R/(W)*	PC5 Flag 0: No change on the PC5 pin 1: Change on the PC5 pin

Note: * Only 0 can be written after reading 1 to clear the flag.

chanhvinh.com

49.2.23 XTAL Crystal Oscillator Gain Control Register (XTALCTR)

XTALCTR is an 8-bit readable/writable register that controls the gain of the crystal oscillator for XTAL. If the realtime clock uses the XTAL input, XTALCTR retains the previous value when software standby mode or deep standby mode is canceled by a source other than a power-on reset. If the realtime clock does not use the XTAL input, XTALCTR is initialized to H'00 when software standby or deep standby mode is entered. XTALCTR is also initialized to H'00 when software standby or deep standby mode is canceled by a power-on reset.

Note: When writing to this register, see section 49.4, Usage Notes.

Bit:	7	6	5	4	3	2	1	0
	-	-	-	-	-	-	-	GAIN
Initial value:	0	0	0	0	0	0	0	0
R/W:	R	R	R	R	R	R	R	R/W

Bit	Bit Name	Initial Value	R/W	Description
7 to 1	—	All 0	R	Reserved These bits are always read as 0. The write value should always be 0.
0	GAIN	0	R/W	XTAL Crystal Oscillator Gain Select 0: Large gain 1: Small gain

chanhvinh.com

49.3 Operation

49.3.1 Sleep Mode

(1) Transition to Sleep Mode

Executing the SLEEP instruction when the STBY bit in STBCR1 is 0 causes a transition from the program execution state to sleep mode. Although the CPU halts immediately after executing the SLEEP instruction, the contents of its internal registers remain unchanged. The on-chip peripheral modules continue to run in sleep mode. The clock output from the CKIO pin is continued.

(2) Canceling Sleep Mode

Sleep mode is canceled by an interrupt (NMI, IRQ, and on-chip peripheral module), a DMA address error, or a reset (manual reset or power-on reset).

- Canceling by an interrupt

  When an NMI, IRQ, or on-chip peripheral module interrupt occurs, sleep mode is canceled and interrupt exception handling is executed. When the priority level of the generated interrupt is equal to or lower than the interrupt mask level that is set in the status register (SR) of the CPU, or the interrupt by the on-chip peripheral module is disabled on the module side, the interrupt request is not accepted and sleep mode is not canceled.
- Canceling by a DMA address error

  When a DMA address error occurs, sleep mode is canceled and DMA address error exception handling is executed.
- Canceling by a reset

  Sleep mode is canceled by a power-on reset or a manual reset.

chanhvinh.com

49.3.2 Software Standby Mode

(1) Transition to Software Standby Mode

The LSI switches from a program execution state to software standby mode by executing the SLEEP instruction when the STBY bit and DEEP bit in STBCR1 are 1 and 0 respectively. In software standby mode, not only the CPU but also the clock and on-chip peripheral modules halt. The clock output from the CKIO pin also stops.

The contents of the CPU and cache registers remain unchanged. Some registers of on-chip peripheral modules are, however, initialized. As for the states of on-chip peripheral module registers in software standby mode, see section 51.3, Register States in Each Operating Mode.

The CPU takes one cycle to finish writing to STBCR1, and then executes processing for the next instruction. However, it takes one or more cycles to actually write. Therefore, execute a SLEEP instruction after reading STBCR1 to have the values written to STBCR1 by the CPU to be definitely reflected in the SLEEP instruction.

The procedure for switching to software standby mode is as follows:

1. Clear the TME bit in the timer control register of the watchdog timer (WTCSR) to 0 to stop the watchdog timer.
2. Set the timer counter (WTCNT) of the watchdog timer to 0 and the CKS[2:0] bits in WTCSR to appropriate values to secure the specified oscillation settling time.
3. After setting the STBY and DEEP bits in STBCR1 to 1 and 0 respectively, read STBCR1. Then, execute a SLEEP instruction.

chanhvinh.com

(2) Canceling Software Standby Mode

Software standby mode is canceled by interrupts (NMI or IRQ) or a reset (power-on reset). Clock signal starts to be output from the CKIO pin.

- Canceling by an interrupt

  When the falling edge or rising edge of the NMI pin (selected by the NMI edge select bit (NMIE) in the interrupt control register 0 (ICR0) of the interrupt controller) or the falling edge or rising edge of an IRQ pin (IRQ7 to IRQ0) (selected by the IRQn sense select bits (IRQn1S and IRQn0S) in interrupt control register 1 (ICR1) of the interrupt controller) is detected, clock oscillation is started. This clock pulse is supplied only to the oscillation settling counter (watchdog timer) used to count the oscillation settling time.

  After the elapse of the time set in the clock select bits (CKS[2:0]) in the watchdog timer control/status register (WTCSR) of the watchdog timer before the transition to software standby mode, the watchdog timer overflow occurs. Since this overflow indicates that the clock has been stabilized, the clock pulse will be supplied to the entire chip after this overflow. Software standby mode is thus cleared and NMI interrupt exception handling (IRQ interrupt exception handling in case of IRQ) is started. If the priority level of the generated interrupt is equal to or lower than the interrupt mask level specified in the status register (SR) of the CPU, the interrupt request is not accepted and software standby mode is not canceled.

  When canceling software standby mode by the NMI interrupt or IRQ interrupt, set the CKS[2:0] bits so that the watchdog timer overflow period will be equal to or longer than the oscillation settling time.

  The clock output phase of the CKIO pin may be unstable immediately after detecting an interrupt and until software standby mode is canceled.

- Canceling by a reset

  When the $\overline{\text{RES}}$ pin is driven low, software standby mode is canceled and the LSI enters the power-on reset state. After that, if the $\overline{\text{RES}}$ pin is driven high, the power-on reset exception handling is started.

  Keep the $\overline{\text{RES}}$ pin low until the clock oscillation settles. The internal clock will continue to be output to the CKIO pin.

chanhvinh.com

(3) Note on Release from Software Standby Mode

Release from software standby mode is triggered by interrupts (NMI and IRQ) or resets (manual reset and power-on reset). If, however, a SLEEP instruction and an interrupt other than NMI and IRQ are generated at the same time, software standby mode may be canceled due to acceptance of the interrupt.

When initiating a transition to software standby mode, make settings so that interrupts are not generated before execution of the SLEEP instruction.

(4) Note on Canceling Software Standby Mode

After software standby mode is canceled, unstable clock pulses are output from the CKIO pin during oscillation settling time. To prevent malfunction due to the unstable pulses, bits 13 and 12 in FRQCR should be modified.

chanhvinh.com

49.3.3 Software Standby Mode Application Example

This example describes a transition to software standby mode on the falling edge of the NMI signal, and cancellation on the rising edge of the NMI signal. The timing is shown in figure 49.1.

When the NMI pin is changed from high to low level while the NMI edge select bit (NMIE) in the interrupt control register 0 (ICR0) is set to 0 (falling edge detection), the NMI interrupt is accepted. When the NMIE bit is set to 1 (rising edge detection) by the NMI exception service routine, the STBY and DEEP bits in STBCR1 are set to 1 and 0 respectively, and a SLEEP instruction is executed, software standby mode is entered. Thereafter, software standby mode is canceled when the NMI pin is changed from low to high level.

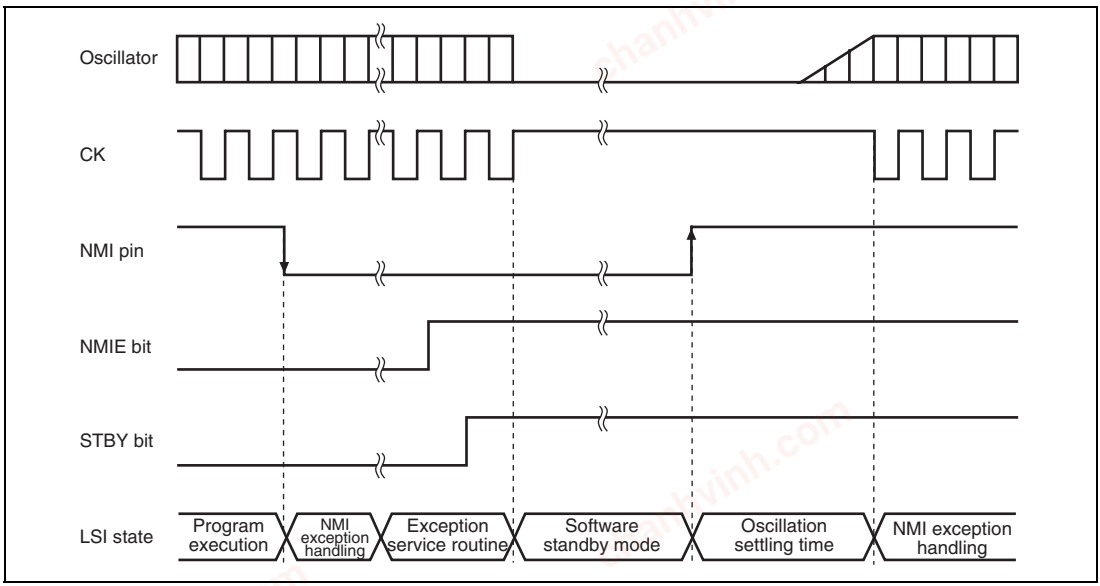

Figure 49.1 NMI Timing in Software Standby Mode (Application Example)

chanhvinh.com

49.3.4 Deep Standby Mode

(1) Transition to Deep Standby Mode

The LSI switches from a program execution state to deep standby mode by executing the SLEEP instruction when the STBY bit and DEEP bit in STBCR1 are set to 1. In deep standby mode, not only the CPU, clocks, and on-chip peripheral modules but also power supply is turned off excluding the on-chip data-retention RAM area specified by the RRAMKP3 to RRAMKP0 bits in RRAMKP and realtime clock. This can significantly reduce power consumption. Therefore, data in the registers of the CPU, cache, and on-chip peripheral modules are not retained. Pin state values immediately before the transition to deep standby mode are retained.

The CPU takes one cycle to finish writing to DSFR, and then executes processing for the next instruction. However, it actually takes one or more cycles to write. Therefore, execute a SLEEP instruction after reading DSFR to reflect the values written to DSFR by the CPU in the SLEEP instruction without fail.

The procedure for switching to deep standby mode is as follows. Figure 49.2 also shows its flowchart.

1. Set the RRAMKP3 to RRAMKP0 bits in RRAMKP for the corresponding on-chip data-retention RAM area that must be retained. Transfer the programs to be retained to the specified areas of the on-chip data-retention RAM.
2. Set the RAMBOOT and EBUSKEEPE bits in DSCTR to specify the activation method for returning from deep standby mode and to select whether the external memory control pin status is retained or not.
3. When canceling deep standby mode by an interrupt, set the corresponding bit in DSSSR to select the pin or source to cancel deep standby mode. In this case, specify the input signal detection mode for the selected pin with the corresponding bit in DSESR.
4. Execute read and write of an arbitrary but the same address for each page in the on-chip data-retention RAM area. When this is not executed, data last written may not be written to the on-chip data-retention RAM. If there is a write to the on-chip data-retention RAM after this time, execute this processing after the last write to the on-chip data-retention RAM.
5. Set the STBY and DEEP bits in STBCR1 to 1.
6. Read out the DSFR register after clearing the flag in the DSFR register. Then execute the SLEEP instruction.

chanhvinh.com

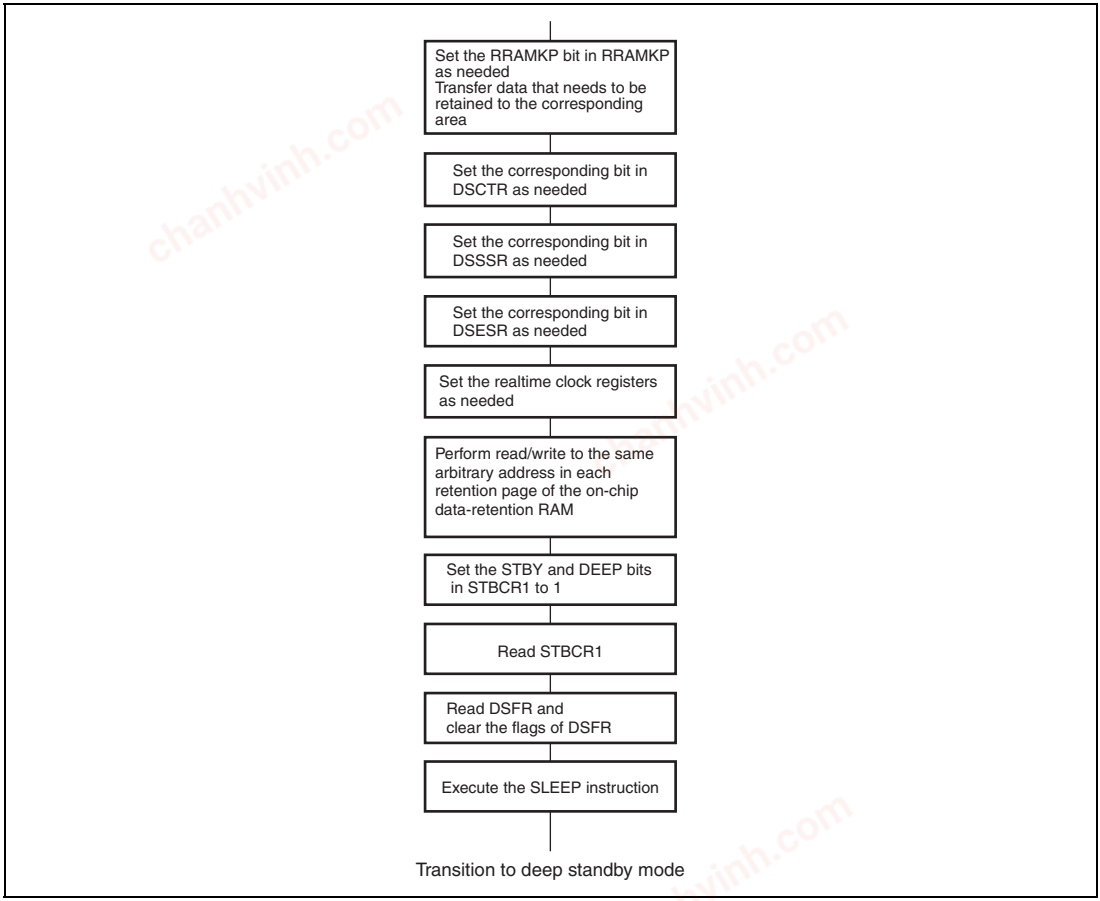

Figure 49.2 Flowchart of Transition to Deep Standby Mode

chanhvinh.com

(2) Canceling Deep Standby Mode

Deep standby mode is canceled by interrupts (NMI or realtime clock alarm interrupt), change on the pins for canceling, or a reset (power-on reset). The realtime clock alarm interrupt can always cancel deep standby mode regardless of the interrupt priority level or the status register (SR) setting in the CPU. When canceling the mode by a source other than a reset, a power-on reset exception handling is executed instead of an interrupt exception handling.

Figure 49.3 shows the flowchart of canceling deep standby mode.

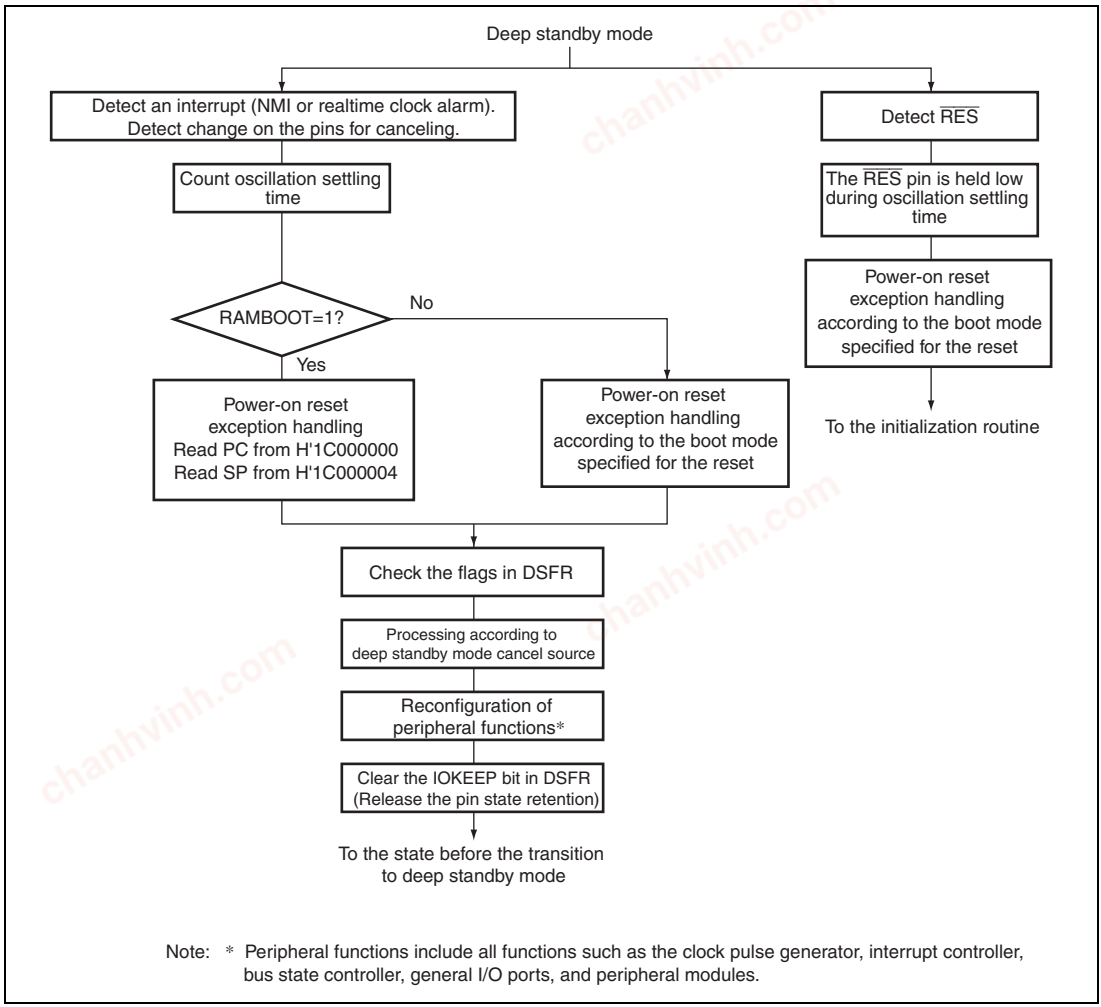

Note: * Peripheral functions include all functions such as the clock pulse generator, interrupt controller, bus state controller, general I/O ports, and peripheral modules.

Figure 49.3 Flowchart of Canceling Deep Standby Mode

chanhvinh.com

- Canceling by a source other than a reset

  When the falling or rising edge of the NMI pin (selected by a corresponding bit in DSESR) or falling or rising edge of the pins for canceling (selected by a corresponding bit in DSESR) is detected or the realtime clock alarm interrupt (see section 15.4.4, Alarm Function) is generated, clock oscillation is started after the wait time for the oscillation settling time. After the oscillation settling time has elapsed, deep standby mode is cancelled and the power-on reset exception handling is executed.

  The clock output phase of the CKIO pin may be unstable immediately after detecting a cancel source and until deep standby mode is canceled.

  The detecting of the NMI pin, the pins for canceling, and the realtime clock alarm interrupt becomes enable when the corresponding bits in DSSSR are set. The detected cancel sources are kept, but they are reflected to DSFR after canceling the deep standby mode. When the CPU accepts any interrupts, all of the cancel sources that are kept are cleared. When the CPU enters the deep standby mode as the detected cancel sources are kept, the deep standby mode is canceled immediately after the CPU enters the deep standby mode.

- Canceling with a reset

  Driving the $\overline{\text{RES}}$ pin low cancels deep standby mode and causes a transition to the power-on reset state. After this, driving the $\overline{\text{RES}}$ pin high initiates power-on reset exception handling. Output of the internal clock from the CKIO pin also starts by driving the $\overline{\text{RES}}$ pin low.

  Keep the $\overline{\text{RES}}$ pin low until the clock oscillation has settled.

chanhvinh.com

(3) Operation after Canceling Deep Standby Mode

After canceling deep standby mode, the LSI can be activated through the external memory or from the on-chip data-retention RAM, which can be selected by setting the RAMBOOT bit in DSCTR. By setting the EBUSKEEPE bit, the states of the external memory control pins can be retained even after cancellation of deep standby mode. Table 49.3 shows the pin states after cancellation of deep standby mode according to the setting of each bit. Table 49.4 lists the external memory control pins.

Table 49.3 Pin States after Cancellation of Deep Standby Mode and System Activation Method by the DSCTR Settings

EBUSKEEPE Bit	RAMBOOT Bit	Activation Method	Pin States After Cancellation of Deep Standby Mode
0	0	External memory	The states of the external memory control pins are not retained. For other pins, the retention of their states is cancelled when the IOKEEP bit is cleared.
0	1	On-chip data-retention RAM	The states of the external memory control pins are not retained. After cancellation of deep standby mode, the retention of the external memory control pin states is cancelled. For other pins, the retention of their states is cancelled when the IOKEEP bit is cleared.
1	0	—	Setting prohibited.
1	1	On-chip data-retention RAM	The states of the external memory control pin are retained. The retention of the states of the external memory control pins and other pins is cancelled when the IOKEEP bit is cleared.

Table 49.4 External Memory Control Pins in Different Modes

Boot Mode 0 (CS0 Area: Bus Width: 16 Bits)	Boot Mode 0 (CS0 Area: Bus Width: 32 Bits)	Boot Mode 2 (NAND Flash Memory)	Boot Mode 3 (Serial Flash Memory)	Boot Mode 4 (SD Host Interface)	Boot Mode 5 (MMC Host Interface)
A[20:1] D[15:0] $\overline{CS0}$, $\overline{RD}$, CKIO	A[20:2] D[31:0] $\overline{CS0}$, $\overline{RD}$, CKIO	NAF[7:0] $\overline{FRE}$, FCLE, $\overline{FALE}$, $\overline{FWE}$, $\overline{FCE}$, FRB	RSPCK0, SSL00, MOSI0, MISO0 (PB17 to PB20 only)	SD_CLK0, SD_CMD0, SD_D[3:0]0	MMC_CLK, MMC_CMD, MMC_D[3:0]

chanhvinh.com

When deep standby mode is canceled by interrupts (NMI or realtime clock alarm) or changes on the pins for canceling, the deep standby cancel source flag register (DSFR) can be used to confirm which source has canceled the mode.

Pins retain the state immediately before the transition to deep standby mode. However, in system activation through the external memory, the retention of the states of the external memory control pins is cancelled so that programs can be fetched after cancellation of deep standby mode. Other pins, after cancellation of deep standby mode, continue to retain the pin states until writing 0 to the IOKEEP bit in DSFR after reading 1 from the same bit. In system activation from the on-chip data-retention RAM, after cancellation of deep standby mode, both the external memory control pins and other pins continues to retain the pin states until writing 0 to the IOKEEP bit in DSFR after reading 1 from the same bit. Reconfiguration of peripheral functions is required to return to the previous state of deep standby mode. Peripheral functions include all functions such as the clock pulse generator, interrupt controller, general I/O ports, and peripheral modules. After the reconfiguration, the retention of the pin state can be canceled and the LSI returns to the state prior to the transition to deep standby mode by reading 1 from the IOKEEP bit in DSFR and then writing 0 to it.

(4) Notes on Transition to Deep Standby Mode

If multiple canceling sources have been specified and multiple canceling sources are input, multiple cancel source flags will be set.

chanhvinh.com

49.3.5 Module Standby Function

(1) Transition to Module Standby Function

Setting the standby control register MSTP bits to 1 halts the supply of clocks to the corresponding on-chip peripheral modules. This function can be used to reduce the power consumption in the program execution state and sleep mode. Disable a module before placing it in the module standby mode. In addition, do not access the module's registers while it is in the module standby state.

For details on the states of registers, see section 51.3, Register States in Each Operating Mode.

(2) Canceling Module Standby Function

The module standby function can be canceled by clearing each MSTP bit to 0, or by a power-on reset (only possible for the realtime clock, user debugging interface, and direct memory access controller). When taking a module out of the module standby state by clearing the corresponding MSTP bit to 0, read the MSTP bit to confirm that it has been cleared to 0.

49.3.6 Adjustment of XTAL Crystal Oscillator Gain

The gain of the crystal oscillator can be adjusted using the GAIN bit in XTALCTR. To modify the gain, PLL settling time is needed. The settling time is counted using the on-chip watchdog timer.

1. The large gain is selected in the initial state.
2. Set the watchdog timer so that the specified settling time should be obtained and stop the watchdog timer. Specifically, the following settings are necessary:
   TME in WTCSR = 0: Stop the watchdog timer.
   CKS[2:0] in WTCSR: Division ratio for watchdog timer count clock
   WTCNT: Initial counter value
   (The watchdog timer starts counting on the set clock.)
3. Set the GAIN bit to the desired value.
4. The LSI is internally stopped and the watchdog timer starts counting. The clock is supplied only to the watchdog timer and other internal clocks are stopped. In this state, the CKIO pin continues to output an unstable clock. To avoid malfunction due to the unstable clock, modify the CKOEN2 bit in FRQCR appropriately. Since this state is equivalent to the software standby mode state, some registers of on-chip peripheral modules are initialized. For details, see section 51.3, Register States in Each Operating Mode.
5. When an overflow occurs on the watchdog timer, the specified clock supply is started and the LSI starts operation. The watchdog timer stops after an overflow.

chanhvinh.com

49.4 Usage Notes

49.4.1 Usage Notes on Setting Registers

When writing to the registers related to power-down modes, note the following.

When writing to the register related to power-down modes, the CPU, after executing a write instruction, executes the next instruction without waiting for the write operation to complete.

Therefore, to reflect the change specified by writing to the register while the next instruction is executed, insert a dummy read of the same register between the register write instruction and the next instruction.

49.4.2 Usage Notes when the Realtime Clock is not Used

When the realtime clock is not used, set the MSTP30 bit in STBCR3 to 1 after setting the bits in registers of the realtime clock. For details, see section 49.2.3, Standby Control Register 3 (STBCR3).

chanhvinh.com

Section 50 User Debugging Interface

This LSI incorporates a user debugging interface for the boundary scan function and emulator support.

50.1 Features

The user debugging interface is a serial input/output interface that supports JTAG (Joint Test Action Group, IEEE Std.1149.1 and IEEE Standard Test Access Port and Boundary-Scan Architecture).

This module incorporates a boundary scan TAP controller and an emulation TAP controller for controlling the user debugging interface interrupt function. When the $\overline{\text{TRST}}$ pin is asserted, including the case of power-on, the boundary scan TAP controller is selected. By inputting the emulation TAP controller switching command, the emulation TAP controller is selected. To switch from the emulation TAP controller to the boundary scan TAP controller, assert the $\overline{\text{TRST}}$ pin.

In ASE mode, the emulation TAP controller is selected. For connection with the emulator, see the manual for the emulator.

Figure 50.1 shows a block diagram.

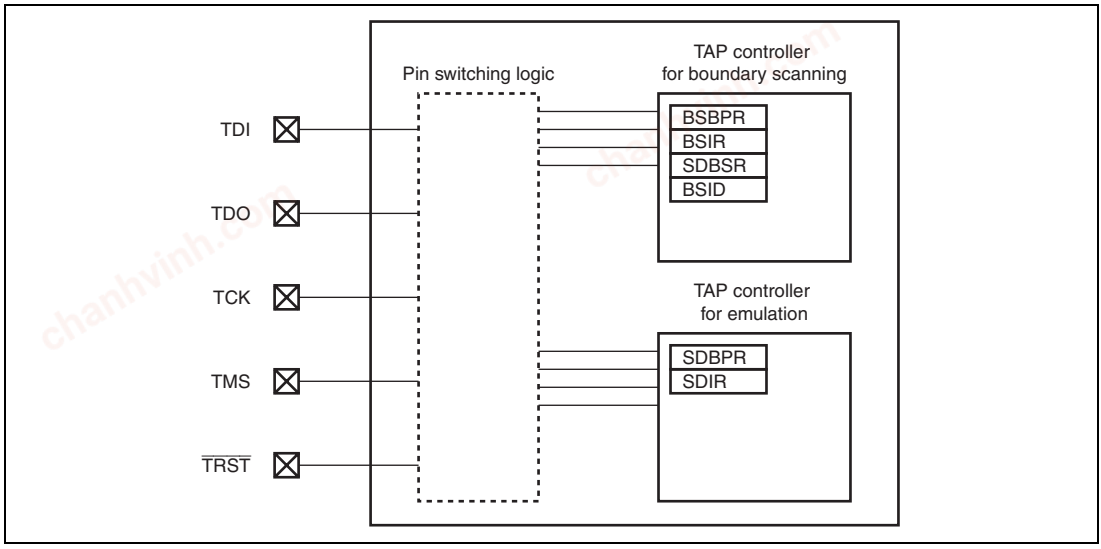

Figure 50.1 Block Diagram

chanhvinh.com

50.2 Input/Output Pins

Table 50.1 Pin Configuration

Pin Name	Symbol	I/O	Function
Serial data input/output clock pin	TCK	Input	Data is serially supplied to this module from the data input pin (TDI), and output from the data output pin (TDO), in synchronization with this clock.
Mode select input pin	TMS	Input	The state of the TAP control circuit is determined by changing this signal in synchronization with TCK. The protocol complies with the JTAG standard (IEEE Std.1149.1).
Reset input pin	$\overline{\text{TRST}}$	Input	Input is accepted asynchronously with respect to TCK, and when low, this module is reset. $\overline{\text{TRST}}$ must be low for a period when power is turned on regardless of using the function. See section 50.5.2, Reset Configuration, for more information.
Serial data input pin	TDI	Input	Data is transferred to this module by changing this signal in synchronization with TCK.
Serial data output pin	TDO	Output	Data is read from this module by reading this pin in synchronization with TCK. The initial value of the data output timing is the TCK falling edge, but this initial value can be changed to the TCK rising edge by inputting the TDO transition timing switching command to SDIR. See section 50.5.3, TDO Output Timing, for more information.
ASE mode select pin	$\overline{\text{ASEMD}}$*	Input	If a low level is input at the $\overline{\text{ASEMD}}$ pin while the $\overline{\text{RES}}$ pin is asserted, ASE mode is entered; if a high level is input, product chip mode is entered. In ASE mode, dedicated emulator function can be used. The input level at the $\overline{\text{ASEMD}}$ pin should be held for at least one cycle after $\overline{\text{RES}}$ negation.

Note: * When the emulator is not in use, fix this pin to the high level.

chanhvinh.com

50.3 Description of the Boundary Scan TAP Controller

The boundary scan TAP controller has the following registers.

Table 50.2 Register Configuration of the Boundary Scan TAP Controller

Register Name	Abbreviation	R/W	Initial Value	Address	Access Size
Bypass register	BSBPR	—	—	—	—
Instruction register	BSIR	—	H'4	—	—
Boundary scan register	SDBSR	—	—	—	—
ID register	BSID	—	H'080C6447	—	—

50.3.1 Bypass Register (BSBPR)

BSBPR is a 1-bit register that cannot be accessed by the CPU. When BSIR is set to BYPASS mode, BSBPR is connected between TDI and TDO pins. The initial value is undefined.

50.3.2 Instruction Register (BSIR)

BSIR is a 4-bit register and initialized by $\overline{\text{TRST}}$ assertion or in the TAP test-logic-reset state. This register cannot be accessed by the CPU.

Bit	Bit Name	Initial Value	R/W	Description
3 to 0	TI[3:0]	0100	—	Test Instruction The instruction of this module is transferred to BSIR as a serial input from TDI. For commands, see table 50.3.

chanhvinh.com

Table 50.3 Supported Commands for Boundary Scan TAP Controller

Bits 3 to 0				
TI3	**TI2**	**TI1**	**TI0**	**Description**
0	0	0	0	EXTEST
0	0	0	1	SAMPLE/PRELOAD
0	0	1	1	Emulation TAP controller switching command
0	1	0	0	IDCODE (initial value)
0	1	1	0	CLAMP
0	1	1	1	HIGHZ
Other than the above				Reserved

50.3.3 Boundary Scan Register (SDBSR)

SDBSR is a shift register located on the PAD to control input/output pins of this LSI. This register cannot be accessed by the CPU. The initial value is undefined.

The EXTEST, SAMPLE/PRELOAD, CLAMP, and HIGHZ commands can be used to perform the boundary scan test that conforms to the JTAG standard. Table 50.4 shows the correspondence between the LSI pins and the bits of the boundary scan register.

chanhvinh.com

Table 50.4 Correspondence between the LSI Pins and the Bits of the Boundary Scan Register

SH7268 Bit Number	SH7269 Bit Number	Pin Name*1	Type	SH7268 Bit Number	SH7269 Bit Number	Pin Name*1	Type	SH7268 Bit Number	SH7269 Bit Number	Pin Name*1	Type
From TDI				—	399	PJ1	OUTPUT	371	371	PG13	CONTROL
426	426	PG0	OUTPUT	—	398	PJ1	CONTROL	370	370	PG13	INPUT
425	425	PG0	CONTROL	—	397	PJ1	INPUT	369	369	PG14	OUTPUT
424	424	PG0	INPUT	396	396	PG8	OUTPUT	368	368	PG14	CONTROL
423	423	PG1	OUTPUT	395	395	PG8	CONTROL	367	367	PG14	INPUT
422	422	PG1	CONTROL	394	394	PG8	INPUT	366	366	PG15	OUTPUT
421	421	PG1	INPUT	—	393	PJ2	OUTPUT	365	365	PG15	CONTROL
420	420	PG2	OUTPUT	—	392	PJ2	CONTROL	364	364	PG15	INPUT
419	419	PG2	CONTROL	—	391	PJ2	INPUT	363	363	PG16	OUTPUT
418	418	PG2	INPUT	—	390	PJ3	OUTPUT	362	362	PG16	CONTROL
417	417	PG3	OUTPUT	—	389	PJ3	CONTROL	361	361	PG16	INPUT
416	416	PG3	CONTROL	—	388	PJ3	INPUT	—	360	PJ5	OUTPUT
415	415	PG3	INPUT	—	387	PJ4	OUTPUT	—	359	PJ5	CONTROL
414	414	PG4	OUTPUT	—	386	PJ4	CONTROL	—	358	PJ5	INPUT
413	413	PG4	CONTROL	—	385	PJ4	INPUT	—	357	PJ6	OUTPUT
412	412	PG4	INPUT	384	384	PG9	OUTPUT	—	356	PJ6	CONTROL
411	411	PG5	OUTPUT	383	383	PG9	CONTROL	—	355	PJ6	INPUT
410	410	PG5	CONTROL	382	382	PG9	INPUT	354	354	PG17	OUTPUT
409	409	PG5	INPUT	381	381	PG10	OUTPUT	353	353	PG17	CONTROL
408	408	PG6	OUTPUT	380	380	PG10	CONTROL	352	352	PG17	INPUT
407	407	PG6	CONTROL	379	379	PG10	INPUT	—	351	PJ7	OUTPUT
406	406	PG6	INPUT	378	378	PG11	OUTPUT	—	350	PJ7	CONTROL
405	405	PG7	OUTPUT	377	377	PG11	CONTROL	—	349	PJ7	INPUT
404	404	PG7	CONTROL	376	376	PG11	INPUT	—	348	PJ8	OUTPUT
403	403	PG7	INPUT	375	375	PG12	OUTPUT	—	347	PJ8	CONTROL
—	402	PJ0	OUTPUT	374	374	PG12	CONTROL	—	346	PJ8	INPUT
—	401	PJ0	CONTROL	373	373	PG12	INPUT	—	345	PJ9	OUTPUT
—	400	PJ0	INPUT	372	372	PG13	OUTPUT	—	344	PJ9	CONTROL

chanhvinh.com

SH7268 Bit Number	SH7269 Bit Number	Pin Name*1	Type	SH7268 Bit Number	SH7269 Bit Number	Pin Name*1	Type	SH7268 Bit Number	SH7269 Bit Number	Pin Name*1	Type
—	343	PJ9	INPUT	311	311	PF0	CONTROL	279	279	PF11	OUTPUT
342	342	PG18	OUTPUT	310	310	PF0	INPUT	278	278	PF11	CONTROL
341	341	PG18	CONTROL	309	309	PF1	OUTPUT	277	277	PF11	INPUT
340	340	PG18	INPUT	308	308	PF1	CONTROL	276	276	PF12	OUTPUT
339	339	PG19	OUTPUT	307	307	PF1	INPUT	275	275	PF12	CONTROL
338	338	PG19	CONTROL	306	306	PF2	OUTPUT	274	274	PF12	INPUT
337	337	PG19	INPUT	305	305	PF2	CONTROL	273	273	PF13	OUTPUT
336	336	PG20	OUTPUT	304	304	PF2	INPUT	272	272	PF13	CONTROL
335	335	PG20	CONTROL	303	303	PF3	OUTPUT	271	271	PF13	INPUT
334	334	PG20	INPUT	302	302	PF3	CONTROL	270	270	PF14	OUTPUT
333	333	PG21	OUTPUT	301	301	PF3	INPUT	269	269	PF14	CONTROL
332	332	PG21	CONTROL	300	300	PF4	OUTPUT	268	268	PF14	INPUT
331	331	PG21	INPUT	299	299	PF4	CONTROL	267	267	PF15	OUTPUT
330	330	PG22	OUTPUT	298	298	PF4	INPUT	266	266	PF15	CONTROL
329	329	PG22	CONTROL	297	297	PF5	OUTPUT	265	265	PF15	INPUT
328	328	PG22	INPUT	296	296	PF5	CONTROL	—	264	PJ10	OUTPUT
327	327	PG23	OUTPUT	295	295	PF5	INPUT	—	263	PJ10	CONTROL
326	326	PG23	CONTROL	294	294	PF6	OUTPUT	—	262	PJ10	INPUT
325	325	PG23	INPUT	293	293	PF6	CONTROL	261	261	PF16	OUTPUT
324	324	PG24	OUTPUT	292	292	PF6	INPUT	260	260	PF16	CONTROL
323	323	PG24	CONTROL	291	291	PF7	OUTPUT	259	259	PF16	INPUT
322	322	PG24	INPUT	290	290	PF7	CONTROL	258	258	PF17	OUTPUT
321	321	PG25	OUTPUT	289	289	PF7	INPUT	257	257	PF17	CONTROL
320	320	PG25	CONTROL	288	288	PF8	OUTPUT	256	256	PF17	INPUT
319	319	PG25	INPUT	287	287	PF8	CONTROL	255	255	PF18	OUTPUT
318	318	PG26	OUTPUT	286	286	PF8	INPUT	254	254	PF18	CONTROL
317	317	PG26	CONTROL	285	285	PF9	OUTPUT	253	253	PF18	INPUT
316	316	PG26	INPUT	284	284	PF9	CONTROL	—	252	PJ11	OUTPUT
315	315	PG27	OUTPUT	283	283	PF9	INPUT	—	251	PJ11	CONTROL
314	314	PG27	CONTROL	282	282	PF10	OUTPUT	—	250	PJ11	INPUT
313	313	PG27	INPUT	281	281	PF10	CONTROL	—	249	PJ12	OUTPUT
312	312	PF0	OUTPUT	280	280	PF10	INPUT	—	248	PJ12	CONTROL

chanhvinh.com

SH7268 Bit Number	SH7269 Bit Number	Pin Name*1	Type	SH7268 Bit Number	SH7269 Bit Number	Pin Name*1	Type	SH7268 Bit Number	SH7269 Bit Number	Pin Name*1	Type
—	247	PJ12	INPUT	216	216	PD3	OUTPUT	185	185	PD10	CONTROL
—	246	PJ13	OUTPUT	215	215	PD3	CONTROL	184	184	PD10	INPUT
—	245	PJ13	CONTROL	214	214	PD3	INPUT	183	183	PD11	OUTPUT
—	244	PJ13	INPUT	—	213	PJ25	OUTPUT	182	182	PD11	CONTROL
243	243	PF19	OUTPUT	—	212	PJ25	CONTROL	181	181	PD11	INPUT
242	242	PF19	CONTROL	—	211	PJ25	INPUT	180	180	PD12	OUTPUT
241	241	PF19	INPUT	—	210	PJ26	OUTPUT	179	179	PD12	CONTROL
240	240	PF20	OUTPUT	—	209	PJ26	CONTROL	178	178	PD12	INPUT
239	239	PF20	CONTROL	—	208	PJ26	INPUT	177	177	PD13	OUTPUT
238	238	PF20	INPUT	—	207	PJ27	OUTPUT	176	176	PD13	CONTROL
237	237	PF21	OUTPUT	—	206	PJ27	CONTROL	175	175	PD13	INPUT
236	236	PF21	CONTROL	—	205	PJ27	INPUT	174	174	PD14	OUTPUT
235	235	PF21	INPUT	204	204	PD4	OUTPUT	173	173	PD14	CONTROL
234	234	PF22	OUTPUT	203	203	PD4	CONTROL	172	172	PD14	INPUT
233	233	PF22	CONTROL	202	202	PD4	INPUT	171	171	PD15	OUTPUT
232	232	PF22	INPUT	201	201	PD5	OUTPUT	170	170	PD15	CONTROL
231	231	PF23	OUTPUT	200	200	PD5	CONTROL	169	169	PD15	INPUT
230	230	PF23	CONTROL	199	199	PD5	INPUT	168	168	PC1	OUTPUT
229	229	PF23	INPUT	198	198	PD6	OUTPUT	167	167	PC1	CONTROL
228	228	PD0	OUTPUT	197	197	PD6	CONTROL	166	166	PC1	INPUT
227	227	PD0	CONTROL	196	196	PD6	INPUT	165	165	PC2	OUTPUT
226	226	PD0	INPUT	195	195	PD7	OUTPUT	164	164	PC2	CONTROL
—	225	PJ24	OUTPUT	194	194	PD7	CONTROL	163	163	PC2	INPUT
—	224	PJ24	CONTROL	193	193	PD7	INPUT	162	162	PC3	OUTPUT
—	223	PJ24	INPUT	192	192	PD8	OUTPUT	161	161	PC3	CONTROL
222	222	PD1	OUTPUT	191	191	PD8	CONTROL	160	160	PC3	INPUT
221	221	PD1	CONTROL	190	190	PD8	INPUT	159	159	PC4	OUTPUT
220	220	PD1	INPUT	189	189	PD9	OUTPUT	158	158	PC4	CONTROL
219	219	PD2	OUTPUT	188	188	PD9	CONTROL	157	157	PC4	INPUT
218	218	PD2	CONTROL	187	187	PD9	INPUT	156	156	PC5	OUTPUT
217	217	PD2	INPUT	186	186	PD10	OUTPUT	155	155	PC5	CONTROL

chanhvinh.com

SH7268 Bit Number	SH7269 Bit Number	Pin Name*1	Type	SH7268 Bit Number	SH7269 Bit Number	Pin Name*1	Type	SH7268 Bit Number	SH7269 Bit Number	Pin Name*1	Type
154	154	PC5	INPUT	—	122	PJ17	CONTROL	—	90	PJ20	OUTPUT
153	153	PC6	OUTPUT	—	121	PJ17	INPUT	—	89	PJ20	CONTROL
152	152	PC6	CONTROL	—	120	PJ18	OUTPUT	—	88	PJ20	INPUT
151	151	PC6	INPUT	—	119	PJ18	CONTROL	87	87	PB13	OUTPUT
150	150	PC7	OUTPUT	—	118	PJ18	INPUT	86	86	PB13	CONTROL
149	149	PC7	CONTROL	117	117	PB5	OUTPUT	85	85	PB13	INPUT
148	148	PC7	INPUT	116	116	PB5	CONTROL	—	84	PJ21	OUTPUT
147	147	PC8	OUTPUT	115	115	PB5	INPUT	—	83	PJ21	CONTROL
146	146	PC8	CONTROL	114	114	PB6	OUTPUT	—	82	PJ21	INPUT
145	145	PC8	INPUT	113	113	PB6	CONTROL	—	81	PJ22	OUTPUT
144	144	PB1	OUTPUT	112	112	PB6	INPUT	—	80	PJ22	CONTROL
143	143	PB1	CONTROL	111	111	PB7	OUTPUT	—	79	PJ22	INPUT
142	142	PB1	INPUT	110	110	PB7	CONTROL	—	78	PJ23	OUTPUT
141	141	PB2	OUTPUT	109	109	PB7	INPUT	—	77	PJ23	CONTROL
140	140	PB2	CONTROL	108	108	PB8	OUTPUT	—	76	PJ23	INPUT
139	139	PB2	INPUT	107	107	PB8	CONTROL	75	75	PB14	OUTPUT
138	138	PB3	OUTPUT	106	106	PB8	INPUT	74	74	PB14	CONTROL
137	137	PB3	CONTROL	105	105	PB9	OUTPUT	73	73	PB14	INPUT
136	136	PB3	INPUT	104	104	PB9	CONTROL	72	72	PB15	OUTPUT
—	135	PJ14	OUTPUT	103	103	PB9	INPUT	71	71	PB15	CONTROL
—	134	PJ14	CONTROL	102	102	PB10	OUTPUT	70	70	PB15	INPUT
—	133	PJ14	INPUT	101	101	PB10	CONTROL	69	69	PB16	OUTPUT
—	132	PJ15	OUTPUT	100	100	PB10	INPUT	68	68	PB16	CONTROL
—	131	PJ15	CONTROL	99	99	PB11	OUTPUT	67	67	PB16	INPUT
—	130	PJ15	INPUT	98	98	PB11	CONTROL	66	66	PB17	OUTPUT
129	129	PB4	OUTPUT	97	97	PB11	INPUT	65	65	PB17	CONTROL
128	128	PB4	CONTROL	96	96	PB12	OUTPUT	64	64	PB17	INPUT
127	127	PB4	INPUT	95	95	PB12	CONTROL	63	63	PB18	OUTPUT
—	126	PJ16	OUTPUT	94	94	PB12	INPUT	62	62	PB18	CONTROL
—	125	PJ16	CONTROL	—	93	PJ19	OUTPUT	61	61	PB18	INPUT
—	124	PJ16	INPUT	—	92	PJ19	CONTROL	60	60	PB19	OUTPUT
—	123	PJ17	OUTPUT	—	91	PJ19	INPUT	59	59	PB19	CONTROL

chanhvinh.com

SH7268 Bit Number	SH7269 Bit Number	Pin Name*1	Type	SH7268 Bit Number	SH7269 Bit Number	Pin Name*1	Type	SH7268 Bit Number	SH7269 Bit Number	Pin Name*1	Type
58	58	PB19	INPUT	—	38	PJ28	CONTROL	—	18	PE5	OUTPUT*2
57	57	PB20	OUTPUT	—	37	PJ28	INPUT	—	17	PE4	INPUT
56	56	PB20	CONTROL	—	36	PJ29	OUTPUT	—	16	PE5	INPUT
55	55	PB20	INPUT	—	35	PJ29	CONTROL	—	15	PE6	OUTPUT*2
54	54	PB21	OUTPUT	—	34	PJ29	INPUT	—	14	PE7	OUTPUT*2
53	53	PB21	CONTROL	—	33	PJ30	OUTPUT	—	13	PE6	INPUT
52	52	PB21	INPUT	—	32	PJ30	CONTROL	—	12	PE7	INPUT
51	51	PB22	OUTPUT	—	31	PJ30	INPUT	11	11	NMI	INPUT
50	50	PB22	CONTROL	—	30	PJ31	OUTPUT	10	10	PH0	INPUT
49	49	PB22	INPUT	—	29	PJ31	CONTROL	9	9	PH1	INPUT
48	48	PC0	OUTPUT	—	28	PJ31	INPUT	8	8	PH2	INPUT
47	47	PC0	CONTROL	27	27	PE0	OUTPUT*2	7	7	PH3	INPUT
46	46	PC0	INPUT	26	26	PE1	OUTPUT*2	6	6	PH4	INPUT
45	45	PA0	OUTPUT	25	25	PE0	INPUT	5	5	PH5	INPUT
44	44	PA0	CONTROL	24	24	PE1	INPUT	—	4	PH6	INPUT
43	43	PA0	INPUT	23	23	PE2	OUTPUT*2	—	3	PH7	INPUT
42	42	PA1	OUTPUT	22	22	PE3	OUTPUT*2	2	2	$\overline{\text{ASEBRKAKN}}$ /$\overline{\text{ASEBRK}}$	OUTPUT
41	41	PA1	CONTROL	21	21	PE2	INPUT	1	1	$\overline{\text{ASEBRKAKN}}$ /$\overline{\text{ASEBRK}}$	CONTROL
40	40	PA1	INPUT	20	20	PE3	INPUT	0	0	$\overline{\text{ASEBRKAKN}}$ /$\overline{\text{ASEBRK}}$	INPUT
—	39	PJ28	OUTPUT	—	19	PE4	OUTPUT*2	To TDO			

Notes: 1. The pin name used for function 1.
2. The pin is open-drain. The pin state is low when driven low, whereas high impedance (Hi-Z) when driven high.
3. The pin of CONTROL is active-low. When this pin is driven low, the state of the corresponding pin is output.

chanhvinh.com

50.3.4 ID Register (BSID)

BSID is a 32-bit register that cannot be accessed by the CPU. The register can be read from pins when the IDCODE command is set, but is not writable.

Bit:	31	30	29	28	27	26	25	24	23	22	21	20	19	18	17	16
	DID[31:16]															
Initial value:	0	0	0	0	1	0	0	0	0	0	0	0	1	1	0	0
R/W:	-	-	-	-	-	-	-	-	-	-	-	-	-	-	-	-

Bit:	15	14	13	12	11	10	9	8	7	6	5	4	3	2	1	0
	DID[15:0]															
Initial value:	0	1	1	0	0	1	0	0	0	1	0	0	0	1	1	1
R/W:	-	-	-	-	-	-	-	-	-	-	-	-	-	-	-	-

Bit	Bit Name	Initial Value	R/W	Description
31 to 0	DID[31:0]	H'080C6447	—	Device This is an ID register defined by JTAG. The value in this LSI is H'080C6447. The upper four bits may be changed for different chip versions.

chanhvinh.com

50.4 Description of the Emulation TAP Controller

To use the emulation TAP controller, enter the emulation TAP controller switching command in the BSIR register of the boundary scan TAP controller. The emulation TAP controller has the following registers.

Table 50.5 Register Configuration of the Emulation TAP Controller

Register Name	Abbreviation	R/W	Initial Value	Address	Access Size
Bypass register	SDBPR	—	—	—	—
Instruction register	SDIR	R	H'EFFD	H'FFFE2000	16

50.4.1 Bypass Register (SDBPR)

SDBPR is a 1-bit register that cannot be accessed by the CPU. When SDIR is set to BYPASS mode, SDBPR is connected between pins TDI and TDO pins. The initial value is undefined.

50.4.2 Instruction Register (SDIR)

SDIR is a 16-bit read-only register and initialized by $\overline{\text{TRST}}$ assertion or in the TAP test-logic-reset state. This module can write to this register regardless of the CPU mode. When a reserved command is set in this register, the operation is not guaranteed. The initial value is H'EFFD.

Bit:	15	14	13	12	11	10	9	8	7	6	5	4	3	2	1	0
	TI[7:0]								-	-	-	-	-	-	-	-
Initial value:	1*	1*	1*	0*	1*	1*	1*	1*	1	1	1	1	1	1	0	1
R/W:	R	R	R	R	R	R	R	R	R	R	R	R	R	R	R	R

Note: * The initial value of TI[7:0] is a reserved value, but replace it with a non-reserved value when setting a command.

Bit	Bit Name	Initial Value	R/W	Description
15 to 8	TI[7:0]	11101111*	R	Test Instruction The instruction of this module is transferred to SDIR as a serial input from TDI. For commands, see table 50.6.

chanhvinh.com

Bit	Bit Name	Initial Value	R/W	Description
7 to 2	—	All 1	R	Reserved These bits are always read as 1.
1	—	0	R	Reserved These bits are always read as 0.
0	—	1	R	Reserved These bits are always read as 1.

Table 50.6 Supported Commands for Emulation TAP Controller

Bits 15 to 8								
TI7	TI6	TI5	TI4	TI3	TI2	TI1	TI0	Description
0	1	1	0	—	—	—	—	User debugging interface reset negation
0	1	1	1	—	—	—	—	User debugging interface reset assertion
1	0	0	1	1	1	0	0	TDO transition timing switch
1	0	1	1	—	—	—	—	User debugging interface interrupt
1	1	1	1	—	—	—	—	BYPASS
Other than the above								Reserved

chanhvinh.com

50.5 Operation

50.5.1 TAP Controller

Figure 50.2 shows the internal states of the TAP controller. This state machine conforms to the state transitions defined by JTAG.

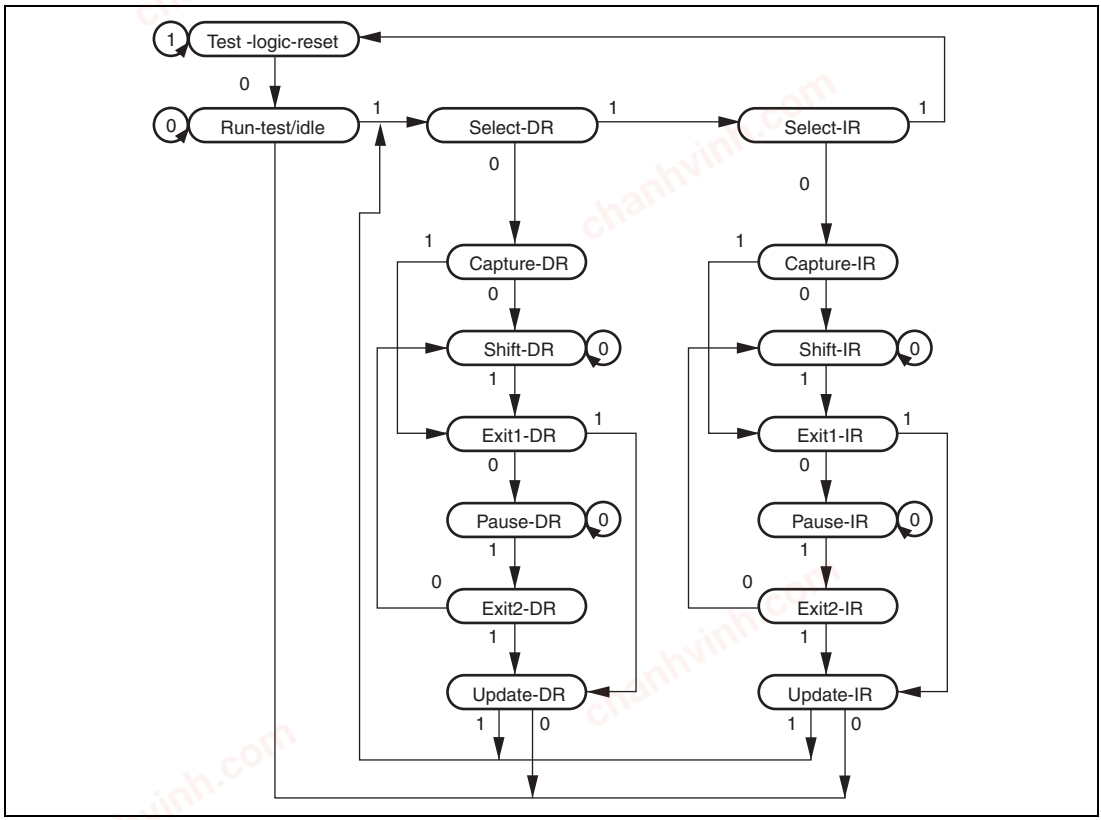

Figure 50.2 TAP Controller State Transitions

Note: The transition condition is the TMS value at the rising edge of TCK. The TDI value is sampled at the rising edge of TCK; shifting occurs at the falling edge of TCK. For details on transition timing of the TDO value, see section 50.5.3, TDO Output Timing. The TDO is at high impedance, except with shift-DR and shift-IR states. During the change to $\overline{\text{TRST}}$ = 0, there is a transition to test-logic-reset asynchronously with TCK.

chanhvinh.com

50.5.2 Reset Configuration

Table 50.7 Reset Configuration

$\overline{\text{ASEMD}}$*1	$\overline{\text{RES}}$	$\overline{\text{TRST}}$	Chip State
H	L	L	Power-on reset and the reset of this module
		H	Power-on reset
	H	L	Reset this module only
		H	Normal operation
L	L	L	Reset hold*2
		H	Power-on reset
	H	L	Reset this module only
		H	Normal operation

Notes: 1. Performs product chip mode and ASE mode settings
$\overline{\text{ASEMD}}$ = H, normal mode
$\overline{\text{ASEMD}}$ = L, ASE mode
2. In ASE mode, reset hold is entered if the $\overline{\text{TRST}}$ pin is driven low while the $\overline{\text{RES}}$ pin is negated. In this state, the CPU does not start up. When $\overline{\text{TRST}}$ is driven high, the operation of this module is enabled, but the CPU does not start up. The reset hold state is cancelled by a power-on reset.

50.5.3 TDO Output Timing

When the emulation TAP controller is selected, a transition on the TDO pin is output on the falling edge of TCK with the initial value. However, setting a TDO transition timing switching command in SDIR via the pin and passing the Update-IR state synchronizes the TDO transition with the rising edge of TCK. This command does not affect the output timing of the boundary scan TAP controller.

To synchronize the transition of TDO with the falling edge of TCK after setting the TDO transition timing switching command, the $\overline{\text{TRST}}$ pin must be asserted simultaneously with the power-on reset. In the case of power-on reset by the $\overline{\text{RES}}$ pin, the sync reset is still in operation for a certain period in the LSI even after the $\overline{\text{RES}}$ pin is negated. Thus, if the $\overline{\text{TRST}}$ pin is asserted immediately after the negation of the $\overline{\text{RES}}$ pin, the TDO transition timing switching command is cleared, resulting in TDO transitions synchronized with the falling edges of TCK. To prevent this, make sure to allow a period of 20 tcyc or longer between the signal transitions of the $\overline{\text{RES}}$ and $\overline{\text{TRST}}$ pins.

chanhvinh.com

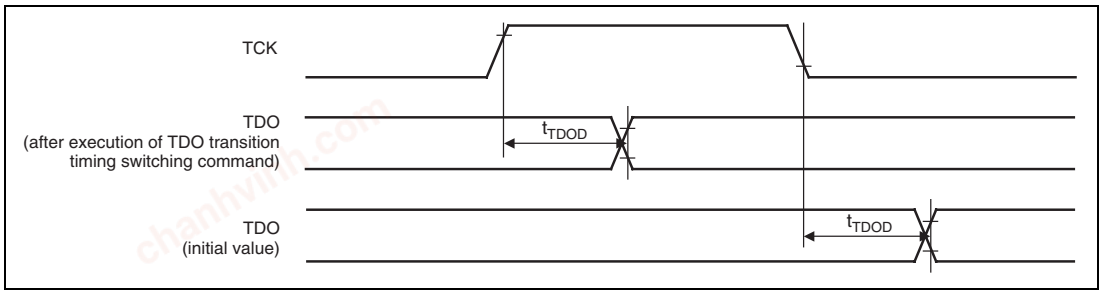

Figure 50.3 User Debugging Interface Data Transfer Timing

50.5.4 User Debugging Interface Reset

A user debugging interface reset occurs when a user debugging interface reset assert command is set in SDIR. A user debugging interface reset is of the same kind as a power-on reset. A user debugging interface reset is cleared by setting a user debugging interface reset negate command. The required time between the user debugging interface reset assert command and user debugging interface reset negate command is the same as time for keeping the $\overline{\text{RES}}$ pin low to apply a power-on reset.

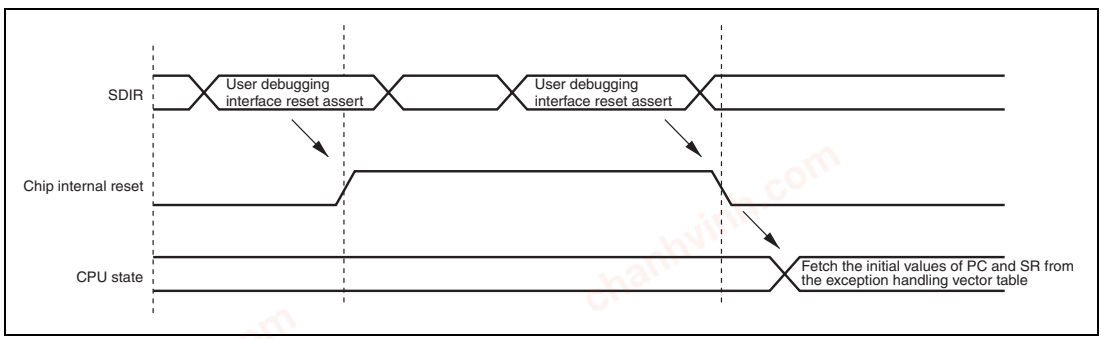

Figure 50.4 User debugging interface Reset

50.5.5 User Debugging Interface Interrupt

The user debugging interface interrupt function generates an interrupt by setting a command from the user debugging interface into SDIR. A user debugging interface interrupt is a general exception/interrupt operation, resulting in fetching the exception service routine start address from the exception handling vector table, jumping to that address, and starting program execution from that address. This interrupt request has a fixed priority level of 15.

User debugging interface interrupts are accepted in sleep mode, but not in software standby mode.

chanhvinh.com

50.6 Boundary Scan

By setting the commands in BSIR by this module, pins can be configured for boundary scan mode defined by JTAG.

50.6.1 Supported Instructions

This LSI supports three required instructions (BYPASS, SAMPLE/PRELOAD, and EXTEST) and three optional instructions (IDCODE, CLAMP, and HIGHZ) defined by JTAG.

(1) BYPASS

The BYPASS instruction is a required standard instruction to operate the bypass register. This instruction is used to increase the transfer speed of serial data of other LSIs on the printed circuit board by reducing the shift path. During execution of this instruction, the test circuit does not affect the system circuit.

(2) SAMPLE/PRELOAD

The SAMPLE/PRELOAD instruction inputs a value from the internal circuit of the LSI to the boundary scan register, and output the data from scan path or load the data to the scan path. During execution of the instruction, the value on the input pin of the LSI is transferred to the internal circuit and the value of the internal circuit is output externally from the output pin. Execution of the instruction does not affect the system circuit of the LSI.

In SAMPLE operation, the snapshots of the value transferred from the input pin to the internal circuit and the value transferred from the internal circuit to the output pin are captured in the boundary scan register and then read from the scan path. Capturing of the snapshots is performed in synchronization with the rising edge of TCK in the capture-DR state. The capturing is performed without interfering with normal operation of the LSI.

In PRELOAD operation, an initial value is set in the output latch of the boundary scan register from the scan path before execution of the EXTEST instruction. Without PRELOAD operation, an undefined value is output from the output pin until the first scan sequence is completed (transferred to the output latch) during execution of the EXTEST instruction (the parallel output latch is always output to the output pin with the EXTEST instruction).

chanhvinh.com

(3) EXTEST

The EXTEST instruction tests the external circuit when this LSI is mounted on the printed circuit board. During execution of this instruction, the output pin is used to output the test data (set in advance by the SAMPLE/PRELOAD instruction) from the boundary scan register to the printed circuit board and the input pin is used to capture the test result from the printed circuit board to the boundary scan register. When a test is performed using the EXTEST instruction N times, the N-th test data is scanned-in during (N-1)-th scan-out.

The data loaded in the boundary scan register of the output pin in the capture-DR state of this instruction is not used in testing of the external circuit (an exchange is made in shift operation).

(4) IDCODE

Setting a command to SDIR can set pins to IDCODE mode that is defined by JTAG. When this module is initialized ($\overline{\text{TRST}}$ is asserted or TAP is placed in the test-logic-reset state), IDCODE mode is entered.

(5) CLAMP and HIGHZ

Setting a command to SDIR can set pins to CLAMP/HIGHZ mode that is defined by JTAG. When this module is initialized ($\overline{\text{TRST}}$ is asserted or TAP is placed in the test-logic-reset state), IDCODE mode is entered.

50.6.2 Notes

1. The clock related signals (EXTAL, XTAL, CKIO, AUDIO_X1, AUDIO_X2, USB_X1, USB_X2, RTC_X1, RTC_X2, and MD_CLK0) are inapplicable to the boundary scan.
2. The reset-related signal ($\overline{\text{RES}}$) is inapplicable to the boundary scan.
3. Related signals (TCK, TDI, TDO, TMS, $\overline{\text{TRST}}$, and $\overline{\text{ASEMD}}$) of this module are inapplicable to the boundary scan.
4. The USB related signals (DP, DM, VBUS, and REFRIN) are inapplicable to the boundary scan.
5. Execute the boundary scan in product chip mode and input the $\overline{\text{ASEMD}}$ pin to high during the $\overline{\text{RES}}$ pin assertion period. And make sure to fix the $\overline{\text{ASEMD}}$ pin at high while executing the boundary scan.

chanhvinh.com

50.7 Usage Notes

1. Once a command of this module has been set, it will not be modified until another command is not set again. If the same command is to be set continuously, the command must be set after a command (BYPASS mode, etc.) that does not affect chip operations is once set.
2. In software standby mode and in this module's standby state, none of the functions of this module can be used. To retain the TAP status before and after standby mode, keep TCK high before entering standby mode.
3. Regardless of whether this module is used, make sure to keep the $\overline{\text{TRST}}$ pin low to initialize this module at power-on or in recovery from deep standby by the $\overline{\text{RES}}$ pin assertion.
4. If the TRST pin is asserted immediately after the setting of the TDO transition timing switching command and the negation of the RES pin, the TDO transition timing switching command is cleared. To avoid this case, make sure to put 20 tcyc or longer between the signal transition timing of the $\overline{\text{RES}}$ and $\overline{\text{TRST}}$ pins. For details, see section 50.5.3, TDO Output Timing.
5. When starting the TAP controller after the negation of the $\overline{\text{TRST}}$ pin, make sure to allow 200 ns or longer after the negation.
6. Please keep TMS pin high for 200 ns from $\overline{\text{TRST}}$ pin negation.

chanhvinh.com

Section 51 List of Registers

This section gives information on the on-chip I/O registers of this LSI in the following structures.

1. Register Addresses (by functional module, in order of the corresponding section numbers)

- Registers are described by functional module, in order of the corresponding section numbers.
- Access to reserved addresses which are not described in this register address list is prohibited.
- When registers consist of 16 or 32 bits, the addresses of the MSBs are given when big endian mode is selected.
- An asterisk (*) in the column "Access Size" indicates that the unit of access in reading differs from that in writing for the given register. For details, see the register descriptions in the relevant section.

2. Register Bits

- Bit configurations of the registers are described in the same order as the Register Addresses (by functional module, in order of the corresponding section numbers).
- Reserved bits are indicated by "—" in the bit name.
- No entry in the bit-name column indicates that the whole register is allocated as a counter or for holding data.

3. Register States in Each Operating Mode

- Register states are described in the same order as the Register Addresses (by functional module, in order of the corresponding section numbers).
- For the initial state of each bit, refer to the description of the register in the corresponding section.
- The register states described are for the basic operating modes. If there is a specific reset for an on-chip peripheral module, refer to the section on that on-chip peripheral module.

chanhvinh.com

4. Notes when Writing to the On-Chip Peripheral Modules

- To access an on-chip module register, two or more peripheral module clock (Pϕ) cycles are required. When the CPU writes data to the internal peripheral registers, the CPU performs the succeeding instructions without waiting for the completion of writing to registers. For example, a case is described here in which the system is transferring to the software standby mode for power savings. To make this transition, the SLEEP instruction must be performed after setting the STBY bit in the STBCR register to 1. However a dummy read of the STBCR register is required before executing the SLEEP instruction. If a dummy read is omitted, the CPU executes the SLEEP instruction before the STBY bit is set to 1, thus the system enters sleep mode not software standby mode. A dummy read of the STBCR register is indispensable to complete writing to the STBY bit. To reflect the change by internal peripheral registers while performing the succeeding instructions, execute a dummy read of registers to which write instruction is given and then perform the succeeding instructions.

chanhvinh.com

51.1 Register Addresses (by functional module, in order of the corresponding section numbers)

Module Name	Register Name	Abbreviation	Number of Bits	Address	Access Size
Clock pulse generator	Frequency control register	FRQCR	16	H'FFFE0010	16
Interrupt controller	Interrupt control register 0	ICR0	16	H'FFFE0800	16, 32
	Interrupt control register 1	ICR1	16	H'FFFE0802	16, 32
	Interrupt control register 2	ICR2	16	H'FFFE0804	16, 32
	IRQ interrupt request register	IRQRR	16	H'FFFE0806	16, 32
	PINT interrupt enable register	PINTER	16	H'FFFE0808	16, 32
	PINT interrupt request register	PIRR	16	H'FFFE080A	16, 32
	Bank control register	IBCR	16	H'FFFE080C	16, 32
	Bank number register	IBNR	16	H'FFFE080E	16, 32
	Interrupt priority register 01	IPR01	16	H'FFFE0818	16, 32
	Interrupt priority register 02	IPR02	16	H'FFFE081A	16, 32
	Interrupt priority register 05	IPR05	16	H'FFFE0820	16, 32
	Interrupt priority register 06	IPR06	16	H'FFFE0C00	16, 32
	Interrupt priority register 07	IPR07	16	H'FFFE0C02	16, 32
	Interrupt priority register 08	IPR08	16	H'FFFE0C04	16, 32
	Interrupt priority register 09	IPR09	16	H'FFFE0C06	16, 32
	Interrupt priority register 10	IPR10	16	H'FFFE0C08	16, 32
	Interrupt priority register 11	IPR11	16	H'FFFE0C0A	16, 32
	Interrupt priority register 12	IPR12	16	H'FFFE0C0C	16, 32
	Interrupt priority register 13	IPR13	16	H'FFFE0C0E	16, 32
	Interrupt priority register 14	IPR14	16	H'FFFE0C10	16, 32
	Interrupt priority register 15	IPR15	16	H'FFFE0C12	16, 32
	Interrupt priority register 16	IPR16	16	H'FFFE0C14	16, 32
	Interrupt priority register 17	IPR17	16	H'FFFE0C16	16, 32
	Interrupt priority register 18	IPR18	16	H'FFFE0C18	16, 32
	Interrupt priority register 19	IPR19	16	H'FFFE0C1A	16, 32
	Interrupt priority register 20	IPR20	16	H'FFFE0C1C	16, 32

chanhvinh.com

Module Name	Register Name	Abbreviation	Number of Bits	Address	Access Size
Interrupt controller	Interrupt priority register 21	IPR21	16	H'FFFE0C1E	16, 32
	Interrupt priority register 22	IPR22	16	H'FFFE0C20	16, 32
	Interrupt priority register 23	IPR23	16	H'FFFE0C22	16, 32
	Interrupt priority register 24	IPR24	16	H'FFFE0C24	16, 32
	Interrupt priority register 25	IPR25	16	H'FFFE0C26	16, 32
	Interrupt priority register 26	IPR26	16	H'FFFE0C28	16, 32
User break controller	Break address register_0	BAR_0	32	H'FFFC0400	32
	Break address mask register_0	BAMR_0	32	H'FFFC0404	32
	Break data register_0	BDR_0	32	H'FFFC0408	32
	Break data mask register_0	BDMR_0	32	H'FFFC040C	32
	Break address register_1	BAR_1	32	H'FFFC0410	32
	Break address mask register_1	BAMR_1	32	H'FFFC0414	32
	Break data register_1	BDR_1	32	H'FFFC0418	32
	Break data mask register_1	BDMR_1	32	H'FFFC041C	32
	Break bus cycle register_0	BBR_0	16	H'FFFC04A0	16
	Break bus cycle register_1	BBR_1	16	H'FFFC04B0	16
	Break control register	BRCR	32	H'FFFC04C0	32
Cache	Cache control register 1	CCR1	32	H'FFFC1000	32
	Cache control register 2	CCR2	32	H'FFFC1004	32
Bus state controller	Common control register	CMNCR	32	H'FFFC 0000	32
	CS0 space bus control register	CS0BCR	32	H'FFFC 0004	32
	CS1 space bus control register	CS1BCR	32	H'FFFC 0008	32
	CS2 space bus control register	CS2BCR	32	H'FFFC 000C	32
	CS3 space bus control register	CS3BCR	32	H'FFFC 0010	32
	CS4 space bus control register	CS4BCR	32	H'FFFC 0014	32
	CS5 space bus control register	CS5BCR	32	H'FFFC 0018	32
	CS0 space wait control register	CS0WCR	32	H'FFFC 0028	32
	CS1 space wait control register	CS1WCR	32	H'FFFC 002C	32
	CS2 space wait control register	CS2WCR	32	H'FFFC 0030	32
	CS3 space wait control register	CS3WCR	32	H'FFFC 0034	32
	CS4 space wait control register	CS4WCR	32	H'FFFC 0038	32

chanhvinh.com

Module Name	Register Name	Abbreviation	Number of Bits	Address	Access Size
Bus state controller	CS5 space wait control register	CS5WCR	32	H'FFFC 003C	32
	SDRAM control register	SDCR	32	H'FFFC 004C	32
	Refresh timer control/status register	RTCSR	16	H'FFFC 0050	32
	Refresh timer counter	RTCNT	16	H'FFFC 0054	32
	Refresh time constant register	RTCOR	16	H'FFFC 0058	32
Direct memory access controller	DMA source address register_0	SAR0	32	H'FFFE1000	16, 32
	DMA destination address register_0	DAR0	32	H'FFFE1004	16, 32
	DMA transfer count register_0	DMATCR0	32	H'FFFE1008	16, 32
	DMA channel control register_0	RSAR0	32	H'FFFE1100	16, 32
	DMA reload source address register_0	RDAR0	32	H'FFFE1104	16, 32
	DMA reload destination address register_0	RDMATCR0	32	H'FFFE1108	16, 32
	DMA reload transfer count register_0	CHCR0	32	H'FFFE100C	8, 16, 32
	DMA source address register_1	SAR1	32	H'FFFE1010	16, 32
	DMA destination address register_1	DAR1	32	H'FFFE1014	16, 32
	DMA transfer count register_1	DMATCR1	32	H'FFFE1018	16, 32
	DMA channel control register_1	CHCR1	32	H'FFFE101C	8, 16, 32
	DMA reload source address register_1	RSAR1	32	H'FFFE1110	16, 32
	DMA reload destination address register_1	RDAR1	32	H'FFFE1114	16, 32
	DMA reload transfer count register_1	RDMATCR1	32	H'FFFE1118	16, 32
	DMA source address register_2	SAR2	32	H'FFFE1020	16, 32
	DMA destination address register_2	DAR2	32	H'FFFE1024	16, 32
	DMA transfer count register_2	DMATCR2	32	H'FFFE1028	16, 32
	DMA channel control register_2	CHCR2	32	H'FFFE102C	8, 16, 32
	DMA reload source address register_2	RSAR2	32	H'FFFE1120	16, 32
	DMA reload destination address register_2	RDAR2	32	H'FFFE1124	16, 32
	DMA reload transfer count register_2	RDMATCR2	32	H'FFFE1128	16, 32
	DMA source address register_3	SAR3	32	H'FFFE1030	16, 32
	DMA destination address register_3	DAR3	32	H'FFFE1034	16, 32
	DMA transfer count register_3	DMATCR3	32	H'FFFE1038	16, 32
	DMA channel control register_3	CHCR3	32	H'FFFE103C	8, 16, 32

chanhvinh.com

Module Name	Register Name	Abbreviation	Number of Bits	Address	Access Size
Direct memory access controller	DMA reload source address register_3	RSAR3	32	H'FFFE1130	16, 32
	DMA reload destination address register_3	RDAR3	32	H'FFFE1134	16, 32
	DMA reload transfer count register_3	RDMATCR3	32	H'FFFE1138	16, 32
	DMA source address register_4	SAR4	32	H'FFFE1040	16, 32
	DMA destination address register_4	DAR4	32	H'FFFE1044	16, 32
	DMA transfer count register_4	DMATCR4	32	H'FFFE1048	16, 32
	DMA channel control register_4	CHCR4	32	H'FFFE104C	8, 16, 32
	DMA reload source address register_4	RSAR4	32	H'FFFE1140	16, 32
	DMA reload destination address register_4	RDAR4	32	H'FFFE1144	16, 32
	DMA reload transfer count register_4	RDMATCR4	32	H'FFFE1148	16, 32
	DMA source address register_5	SAR5	32	H'FFFE1050	16, 32
	DMA destination address register_5	DAR5	32	H'FFFE1054	16, 32
	DMA transfer count register_5	DMATCR5	32	H'FFFE1058	16, 32
	DMA channel control register_5	CHCR5	32	H'FFFE105C	8, 16, 32
	DMA reload source address register_5	RSAR5	32	H'FFFE1150	16, 32
	DMA reload destination address register_5	RDAR5	32	H'FFFE1154	16, 32
	DMA reload transfer count register_5	RDMATCR5	32	H'FFFE1158	16, 32
	DMA source address register_6	SAR6	32	H'FFFE1060	16, 32
	DMA destination address register_6	DAR6	32	H'FFFE1064	16, 32
	DMA transfer count register_6	DMATCR6	32	H'FFFE1068	16, 32
	DMA channel control register_6	CHCR6	32	H'FFFE106C	8, 16, 32
	DMA reload source address register_6	RSAR6	32	H'FFFE1160	16, 32
	DMA reload destination address register_6	RDAR6	32	H'FFFE1164	16, 32
	DMA reload transfer count register_6	RDMATCR6	32	H'FFFE1168	16, 32
	DMA source address register_7	SAR7	32	H'FFFE1070	16, 32
	DMA destination address register_7	DAR7	32	H'FFFE1074	16, 32
	DMA transfer count register_7	DMATCR7	32	H'FFFE1078	16, 32
	DMA channel control register_7	CHCR7	32	H'FFFE107C	8, 16, 32
	DMA reload source address register_7	RSAR7	32	H'FFFE1170	16, 32

chanhvinh.com

Module Name	Register Name	Abbreviation	Number of Bits	Address	Access Size
Direct memory access controller	DMA reload destination address register_7	RDAR7	32	H'FFFE1174	16, 32
	DMA reload transfer count register_7	RDMATCR7	32	H'FFFE1178	16, 32
	DMA source address register_8	SAR8	32	H'FFFE1080	16, 32
	DMA destination address register_8	DAR8	32	H'FFFE1084	16, 32
	DMA transfer count register_8	DMATCR8	32	H'FFFE1088	16, 32
	DMA channel control register_8	RSAR8	32	H'FFFE1180	16, 32
	DMA reload source address register_8	RDAR8	32	H'FFFE1184	16, 32
	DMA reload destination address register_8	RDMATCR8	32	H'FFFE1188	16, 32
	DMA reload transfer count register_8	CHCR8	32	H'FFFE108C	8, 16, 32
	DMA source address register_9	SAR9	32	H'FFFE1090	16, 32
	DMA destination address register_9	DAR9	32	H'FFFE1094	16, 32
	DMA transfer count register_9	DMATCR9	32	H'FFFE1098	16, 32
	DMA channel control register_9	CHCR9	32	H'FFFE109C	8, 16, 32
	DMA reload source address register_9	RSAR9	32	H'FFFE1190	16, 32
	DMA reload destination address register_9	RDAR9	32	H'FFFE1194	16, 32
	DMA reload transfer count register_9	RDMATCR9	32	H'FFFE1198	16, 32
	DMA source address register_10	SAR10	32	H'FFFE10A0	16, 32
	DMA destination address register_10	DAR10	32	H'FFFE10A4	16, 32
	DMA transfer count register_10	DMATCR10	32	H'FFFE10A8	16, 32
	DMA channel control register_10	CHCR10	32	H'FFFE10AC	8, 16, 32
	DMA reload source address register_10	RSAR10	32	H'FFFE11A0	16, 32
	DMA reload destination address register_10	RDAR10	32	H'FFFE11A4	16, 32
	DMA reload transfer count register_10	RDMATCR10	32	H'FFFE11A8	16, 32
	DMA source address register_11	SAR11	32	H'FFFE10B0	16, 32
	DMA destination address register_11	DAR11	32	H'FFFE10B4	16, 32
	DMA transfer count register_11	DMATCR11	32	H'FFFE10B8	16, 32
	DMA channel control register_11	CHCR11	32	H'FFFE10BC	8, 16, 32
	DMA reload source address register_11	RSAR11	32	H'FFFE11B0	16, 32

chanhvinh.com

Module Name	Register Name	Abbreviation	Number of Bits	Address	Access Size
Direct memory access controller	DMA reload destination address register_11	RDAR11	32	H'FFFE11B4	16, 32
	DMA reload transfer count register_11	RDMATCR11	32	H'FFFE11B8	16, 32
	DMA source address register_12	SAR12	32	H'FFFE10C0	16, 32
	DMA destination address register_12	DAR12	32	H'FFFE10C4	16, 32
	DMA transfer count register_12	DMATCR12	32	H'FFFE10C8	16, 32
	DMA channel control register_12	CHCR12	32	H'FFFE10CC	8, 16, 32
	DMA reload source address register_12	RSAR12	32	H'FFFE11C0	16, 32
	DMA reload destination address register_12	RDAR12	32	H'FFFE11C4	16, 32
	DMA reload transfer count register_12	RDMATCR12	32	H'FFFE11C8	16, 32
	DMA source address register_13	SAR13	32	H'FFFE10D0	16, 32
	DMA destination address register_13	DAR13	32	H'FFFE10D4	16, 32
	DMA transfer count register_13	DMATCR13	32	H'FFFE10D8	16, 32
	DMA channel control register_13	CHCR13	32	H'FFFE10DC	8, 16, 32
	DMA reload source address register_13	RSAR13	32	H'FFFE11D0	16, 32
	DMA reload destination address register_13	RDAR13	32	H'FFFE11D4	16, 32
	DMA reload transfer count register_13	RDMATCR13	32	H'FFFE11D8	16, 32
	DMA source address register_14	SAR14	32	H'FFFE10E0	16, 32
	DMA destination address register_14	DAR14	32	H'FFFE10E4	16, 32
	DMA transfer count register_14	DMATCR14	32	H'FFFE10E8	16, 32
	DMA channel control register_14	CHCR14	32	H'FFFE10EC	8, 16, 32
	DMA reload source address register_14	RSAR14	32	H'FFFE11E0	16, 32
	DMA reload destination address register_14	RDAR14	32	H'FFFE11E4	16, 32
	DMA reload transfer count register_14	RDMATCR14	32	H'FFFE11E8	16, 32
	DMA source address register_15	SAR15	32	H'FFFE10F0	16, 32
	DMA destination address register_15	DAR15	32	H'FFFE10F4	16, 32
	DMA transfer count register_15	DMATCR15	32	H'FFFE10F8	16, 32
	DMA channel control register_15	CHCR15	32	H'FFFE10FC	8, 16, 32
	DMA reload source address register_15	RSAR15	32	H'FFFE11F0	16, 32
	DMA reload destination address register_15	RDAR15	32	H'FFFE11F4	16, 32

chanhvinh.com

Module Name	Register Name	Abbreviation	Number of Bits	Address	Access Size
Direct memory access controller	DMA reload transfer count register_15	RDMATCR15	32	H'FFFE11F8	16, 32
	DMA operation register	DMAOR	16	H'FFFE1200	8, 16
	DMA extension resource selector 0	DMARS0	16	H'FFFE1300	16
	DMA extension resource selector 1	DMARS1	16	H'FFFE1304	16
	DMA extension resource selector 2	DMARS2	16	H'FFFE1308	16
	DMA extension resource selector 3	DMARS3	16	H'FFFE130C	16
	DMA extension resource selector 4	DMARS4	16	H'FFFE1310	16
	DMA extension resource selector 5	DMARS5	16	H'FFFE1314	16
	DMA extension resource selector 6	DMARS6	16	H'FFFE1318	16
	DMA extension resource selector 7	DMARS7	16	H'FFFE131C	16
Multi-function timer pulse unit 2	Timer control register_0	TCR_0	8	H'FFFE4300	8
	Timer mode register_0	TMDR_0	8	H'FFFE4301	8
	Timer I/O control register H_0	TIORH_0	8	H'FFFE4302	8
	Timer I/O control register L_0	TIORL_0	8	H'FFFE4303	8
	Timer interrupt enable register_0	TIER_0	8	H'FFFE4304	8
	Timer status register_0	TSR_0	8	H'FFFE4305	8
	Timer counter_0	TCNT_0	16	H'FFFE4306	16
	Timer general register A_0	TGRA_0	16	H'FFFE4308	16
	Timer general register B_0	TGRB_0	16	H'FFFE430A	16
	Timer general register C_0	TGRC_0	16	H'FFFE430C	16
	Timer general register D_0	TGRD_0	16	H'FFFE430E	16
	Timer general register E_0	TGRE_0	16	H'FFFE4320	16
	Timer general register F_0	TGRF_0	16	H'FFFE4322	16
	Timer interrupt enable register 2_0	TIER2_0	8	H'FFFE4324	8
	Timer status register 2_0	TSR2_0	8	H'FFFE4325	8
	Timer buffer operation transfer mode register_0	TBTM_0	8	H'FFFE4326	8
	Timer control register_1	TCR_1	8	H'FFFE4380	8
	Timer mode register_1	TMDR_1	8	H'FFFE4381	8
	Timer I/O control register_1	TIOR_1	8	H'FFFE4382	8
	Timer interrupt enable register_1	TIER_1	8	H'FFFE4384	8
	Timer status register_1	TSR_1	8	H'FFFE4385	8
	Timer counter_1	TCNT_1	16	H'FFFE4386	16

chanhvinh.com

Module Name	Register Name	Abbreviation	Number of Bits	Address	Access Size
Multi-function timer pulse unit 2	Timer general register A_1	TGRA_1	16	H'FFFE4388	16
	Timer general register B_1	TGRB_1	16	H'FFFE438A	16
	Timer input capture control register	TICCR	8	H'FFFE4390	8
	Timer control register_2	TCR_2	8	H'FFFE4000	8
	Timer mode register_2	TMDR_2	8	H'FFFE4001	8
	Timer I/O control register_2	TIOR_2	8	H'FFFE4002	8
	Timer interrupt enable register_2	TIER_2	8	H'FFFE4004	8
	Timer status register_2	TSR_2	8	H'FFFE4005	8
	Timer counter_2	TCNT_2	16	H'FFFE4006	16
	Timer general register A_2	TGRA_2	16	H'FFFE4008	16
	Timer general register B_2	TGRB_2	16	H'FFFE400A	16
	Timer control register_3	TCR_3	8	H'FFFE4200	8
	Timer mode register_3	TMDR_3	8	H'FFFE4202	8
	Timer I/O control register H_3	TIORH_3	8	H'FFFE4204	8
	Timer I/O control register L_3	TIORL_3	8	H'FFFE4205	8
	Timer interrupt enable register_3	TIER_3	8	H'FFFE4208	8
	Timer status register_3	TSR_3	8	H'FFFE422C	8
	Timer counter_3	TCNT_3	16	H'FFFE4210	16
	Timer general register A_3	TGRA_3	16	H'FFFE4218	16
	Timer general register B_3	TGRB_3	16	H'FFFE421A	16
	Timer general register C_3	TGRC_3	16	H'FFFE4224	16
	Timer general register D_3	TGRD_3	16	H'FFFE4226	16
	Timer buffer operation transfer mode register_3	TBTM_3	8	H'FFFE4238	8
	Timer control register_4	TCR_4	8	H'FFFE4201	8
	Timer mode register_4	TMDR_4	8	H'FFFE4203	8
	Timer I/O control register H_4	TIORH_4	8	H'FFFE4206	8
	Timer I/O control register L_4	TIORL_4	8	H'FFFE4207	8
	Timer interrupt enable register_4	TIER_4	8	H'FFFE4209	8
	Timer status register_4	TSR_4	8	H'FFFE422D	8
	Timer counter_4	TCNT_4	16	H'FFFE4212	16
	Timer general register A_4	TGRA_4	16	H'FFFE421C	16

chanhvinh.com

Module Name	Register Name	Abbreviation	Number of Bits	Address	Access Size
Multi-function timer pulse unit 2	Timer general register B_4	TGRB_4	16	H'FFFE421E	16
	Timer general register C_4	TGRC_4	16	H'FFFE4228	16
	Timer general register D_4	TGRD_4	16	H'FFFE422A	16
	Timer buffer operation transfer mode register_4	TBTM_4	8	H'FFFE4239	8
	Timer A/D converter start request control register	TADCR	16	H'FFFE4240	16
	Timer A/D converter start request cycle set register A_4	TADCORA_4	16	H'FFFE4244	16
	Timer A/D converter start request cycle set register B_4	TADCORB_4	16	H'FFFE4246	16
	Timer A/D converter start request cycle set buffer register A_4	TADCOBRA_4	16	H'FFFE4248	16
	Timer A/D converter start request cycle set buffer register B_4	TADCOBRB_4	16	H'FFFE424A	16
	Timer start register	TSTR	8	H'FFFE4280	8
	Timer synchronous register	TSYR	8	H'FFFE4281	8
	Timer read/write enable register	TRWER	8	H'FFFE4284	8
	Timer output master enable register	TOER	8	H'FFFE420A	8
	Timer output control register 1	TOCR1	8	H'FFFE420E	8
	Timer output control register 2	TOCR2	8	H'FFFE420F	8
	Timer gate control register	TGCR	8	H'FFFE420D	8
	Timer cycle data register	TCDR	16	H'FFFE4214	16
	Timer dead time data register	TDDR	16	H'FFFE4216	16
	Timer subcounter	TCNTS	16	H'FFFE4220	16
	Timer cycle buffer register	TCBR	16	H'FFFE4222	16
	Timer interrupt skipping set register	TITCR	8	H'FFFE4230	8
	Timer interrupt skipping counter	TITCNT	8	H'FFFE4231	8
	Timer buffer transfer set register	TBTER	8	H'FFFE4232	8
	Timer dead time enable register	TDER	8	H'FFFE4234	8
	Timer waveform control register	TWCR	8	H'FFFE4260	8
	Timer output level buffer register	TOLBR	8	H'FFFE4236	8

chanhvinh.com

Module Name	Register Name	Abbreviation	Number of Bits	Address	Access Size
Compare match timer	Compare match timer start register	CMSTR	16	H'FFFEC000	16
	Compare match timer control/status register_0	CMCSR_0	16	H'FFFEC002	16
	Compare match counter_0	CMCNT_0	16	H'FFFEC004	8, 16
	Compare match constant register_0	CMCOR_0	16	H'FFFEC006	8, 16
	Compare match timer control/status register_1	CMCSR_1	16	H'FFFEC008	16
	Compare match counter_1	CMCNT_1	16	H'FFFEC00A	8, 16
	Compare match constant register_1	CMCOR_1	16	H'FFFEC00C	8, 16
Watchdog timer	Watchdog timer counter	WTCNT	8	H'FFFE0002	8, 16
	Watchdog timer control/status register	WTCSR	8	H'FFFE0000	8, 16
	Watchdog reset control/status register	WRCSR	8	H'FFFE0004	8, 16
Realtime clock	64-Hz counter	R64CNT	8	H'FFFE6000	8
	Second counter	RSECCNT	8	H'FFFE6002	8
	Minute counter	RMINCNT	8	H'FFFE6004	8
	Hour counter	RHRCNT	8	H'FFFE6006	8
	Day of week counter	RWKCNT	8	H'FFFE6008	8
	Date counter	RDAYCNT	8	H'FFFE600A	8
	Month counter	RMONCNT	8	H'FFFE600C	8
	Year counter	RYRCNT	16	H'FFFE600E	16
	Second alarm register	RSECAR	8	H'FFFE6010	8
	Minute alarm register	RMINAR	8	H'FFFE6012	8
	Hour alarm register	RHRAR	8	H'FFFE6014	8
	Day of week alarm register	RWKAR	8	H'FFFE6016	8
	Date alarm register	RDAYAR	8	H'FFFE6018	8
	Month alarm register	RMONAR	8	H'FFFE601A	8
	Year alarm register	RYRAR	16	H'FFFE6020	16
	Control register 1	RCR1	8	H'FFFE601C	8
	Control register 2	RCR2	8	H'FFFE601E	8
	Control register 3	RCR3	8	H'FFFE6024	8
	Control register 5	RCR5	8	H'FFFE6026	8
	Frequency register H	RFRH	16	H'FFFE602A	16

chanhvinh.com

Module Name	Register Name	Abbreviation	Number of Bits	Address	Access Size
Realtime clock	Frequency register L	RFRL	16	H'FFFE602C	16
Serial communication interface with FIFO	Serial mode register_0	SCSMR_0	16	H'E8007000	16
	Bit rate register_0	SCBRR_0	8	H'E8007004	8
	Serial control register_0	SCSCR_0	16	H'E8007008	16
	Transmit FIFO data register_0	SCFTDR_0	8	H'E800700C	8
	Serial status register_0	SCFSR_0	16	H'E8007010	16
	Receive FIFO data register_0	SCFRDR_0	8	H'E8007014	8
	FIFO control register_0	SCFCR_0	16	H'E8007018	16
	FIFO data count set register_0	SCFDR_0	16	H'E800701C	16
	Serial port register_0	SCSPTR_0	16	H'E8007020	16
	Line status register_0	SCLSR_0	16	H'E8007024	16
	Serial extension mode register_0	SCEMR_0	16	H'E8007028	16
	Serial mode register_1	SCSMR_1	16	H'E8007800	16
	Bit rate register_1	SCBRR_1	8	H'E8007804	8
	Serial control register_1	SCSCR_1	16	H'E8007808	16
	Transmit FIFO data register_1	SCFTDR_1	8	H'E800780C	8
	Serial status register_1	SCFSR_1	16	H'E8007810	16
	Receive FIFO data register_1	SCFRDR_1	8	H'E8007814	8
	FIFO control register_1	SCFCR_1	16	H'E8007818	16
	FIFO data count set register_1	SCFDR_1	16	H'E800781C	16
	Serial port register_1	SCSPTR_1	16	H'E8007820	16
	Line status register_1	SCLSR_1	16	H'E8007824	16
	Serial extension mode register_1	SCEMR_1	16	H'E8007828	16
	Serial mode register_2	SCSMR_2	16	H'E8008000	16
	Bit rate register_2	SCBRR_2	8	H'E8008004	8
	Serial control register_2	SCSCR_2	16	H'E8008008	16
	Transmit FIFO data register_2	SCFTDR_2	8	H'E800800C	8
	Serial status register_2	SCFSR_2	16	H'E8008010	16
	Receive FIFO data register_2	SCFRDR_2	8	H'E8008014	8
	FIFO control register_2	SCFCR_2	16	H'E8008018	16
	FIFO data count set register_2	SCFDR_2	16	H'E800801C	16
	Serial port register_2	SCSPTR_2	16	H'E8008020	16

chanhvinh.com

Module Name	Register Name	Abbreviation	Number of Bits	Address	Access Size
Serial communication interface with FIFO	Line status register_2	SCLSR_2	16	H'E8008024	16
	Serial extension mode register_2	SCEMR_2	16	H'E8008028	16
	Serial mode register_3	SCSMR_3	16	H'E8008800	16
	Bit rate register_3	SCBRR_3	8	H'E8008804	8
	Serial control register_3	SCSCR_3	16	H'E8008808	16
	Transmit FIFO data register_3	SCFTDR_3	8	H'E800880C	8
	Serial status register_3	SCFSR_3	16	H'E8008810	16
	Receive FIFO data register_3	SCFRDR_3	8	H'E8008814	8
	FIFO control register_3	SCFCR_3	16	H'E8008818	16
	FIFO data count set register_3	SCFDR_3	16	H'E800881C	16
	Serial port register_3	SCSPTR_3	16	H'E8008820	16
	Line status register_3	SCLSR_3	16	H'E8008824	16
	Serial extension mode register_3	SCEMR_3	16	H'E8008828	16
	Serial mode register_4	SCSMR_4	16	H'E8009000	16
	Bit rate register_4	SCBRR_4	8	H'E8009004	8
	Serial control register_4	SCSCR_4	16	H'E8009008	16
	Transmit FIFO data register_4	SCFTDR_4	8	H'E800900C	8
	Serial status register_4	SCFSR_4	16	H'E8009010	16
	Receive FIFO data register_4	SCFRDR_4	8	H'E8009014	8
	FIFO control register_4	SCFCR_4	16	H'E8009018	16
	FIFO data count set register_4	SCFDR_4	16	H'E800901C	16
	Serial port register_4	SCSPTR_4	16	H'E8009020	16
	Line status register_4	SCLSR_4	16	H'E8009024	16
	Serial extension mode register_4	SCEMR_4	16	H'E8009028	16
	Serial mode register_5	SCSMR_5	16	H'E8009800	16
	Bit rate register_5	SCBRR_5	8	H'E8009804	8
	Serial control register_5	SCSCR_5	16	H'E8009808	16
	Transmit FIFO data register_5	SCFTDR_5	8	H'E800980C	8
	Serial status register_5	SCFSR_5	16	H'E8009810	16
	Receive FIFO data register_5	SCFRDR_5	8	H'E8009814	8
	FIFO control register_5	SCFCR_5	16	H'E8009818	16
	FIFO data count set register_5	SCFDR_5	16	H'E800981C	16

chanhvinh.com

Module Name	Register Name	Abbreviation	Number of Bits	Address	Access Size
Serial communication interface with FIFO	Serial port register_5	SCSPTR_5	16	H'E8009820	16
	Line status register_5	SCLSR_5	16	H'E8009824	16
	Serial extension mode register_5	SCEMR_5	16	H'E8009828	16
	Serial mode register_6	SCSMR_6	16	H'E800A000	16
	Bit rate register_6	SCBRR_6	8	H'E800A004	8
	Serial control register_6	SCSCR_6	16	H'E800A008	16
	Transmit FIFO data register_6	SCFTDR_6	8	H'E800A00C	8
	Serial status register_6	SCFSR_6	16	H'E800A010	16
	Receive FIFO data register_6	SCFRDR_6	8	H'E800A014	8
	FIFO control register_6	SCFCR_6	16	H'E800A018	16
	FIFO data count set register_6	SCFDR_6	16	H'E800A01C	16
	Serial port register_6	SCSPTR_6	16	H'E800A020	16
	Line status register_6	SCLSR_6	16	H'E800A024	16
	Serial extension mode register_6	SCEMR_6	16	H'E800A028	16
	Serial mode register_7	SCSMR_7	16	H'E800A800	16
	Bit rate register_7	SCBRR_7	8	H'E800A804	8
	Serial control register_7	SCSCR_7	16	H'E800A808	16
	Transmit FIFO data register_7	SCFTDR_7	8	H'E800A80C	8
	Serial status register_7	SCFSR_7	16	H'E800A810	16
	Receive FIFO data register_7	SCFRDR_7	8	H'E800A814	8
	FIFO control register_7	SCFCR_7	16	H'E800A818	16
	FIFO data count set register_7	SCFDR_7	16	H'E800A81C	16
	Serial port register_7	SCSPTR_7	16	H'E800A820	16
	Line status register_7	SCLSR_7	16	H'E800A824	16
	Serial extension mode register_7	SCEMR_7	16	H'E800A828	16
Renesas serial peripheral interface	Control register_0	SPCR_0	8	H'E800E000	8, 16
	Slave select polarity register_0	SSLP_0	8	H'E800E001	8, 16
	Pin control register_0	SPPCR_0	8	H'E800E002	8, 16
	Status register_0	SPSR_0	8	H'E800E003	8, 16
	Data register_0	SPDR_0	32	H'E800E004	8, 16, 32
	Sequence control register_0	SPSCR_0	8	H'E800E008	8, 16
	Sequence status register_0	SPSSR_0	8	H'E800E009	8, 16

chanhvinh.com

Module Name	Register Name	Abbreviation	Number of Bits	Address	Access Size
Renesas serial peripheral interface	Bit rate register_0	SPBR_0	8	H'E800E00A	8, 16
	Data control register_0	SPDCR_0	8	H'E800E00B	8, 16
	Clock delay register_0	SPCKD_0	8	H'E800E00C	8, 16
	Slave select negation delay register_0	SSLND_0	8	H'E800E00D	8, 16
	Next-access delay register_0	SPND_0	8	H'E800E00E	8
	Command register_00	SPCMD_00	16	H'E800E010	16
	Command register_01	SPCMD_01	16	H'E800E012	16
	Command register_02	SPCMD_02	16	H'E800E014	16
	Command register_03	SPCMD_03	16	H'E800E016	16
	Buffer control register_0	SPBFCR_0	8	H'E800E020	8, 16
	Buffer data count setting register_0	SPBFDR_0	16	H'E800E022	16
	Control register_1	SPCR_1	8	H'E800E800	8, 16
	Slave select polarity register_1	SSLP_1	8	H'E800E801	8, 16
	Pin control register_1	SPPCR_1	8	H'E800E802	8, 16
	Status register_1	SPSR_1	8	H'E800E803	8, 16
	Data register_1	SPDR_1	32	H'E800E804	8, 16, 32
	Sequence control register_1	SPSCR_1	8	H'E800E808	8, 16
	Sequence status register_1	SPSSR_1	8	H'E800E809	8, 16
	Bit rate register_1	SPBR_1	8	H'E800E80A	8, 16
	Data control register_1	SPDCR_1	8	H'E800E80B	8, 16
	Clock delay register_1	SPCKD_1	8	H'E800E80C	8, 16
	Slave select negation delay register_1	SSLND_1	8	H'E800E80D	8, 16
	Next-access delay register_1	SPND_1	8	H'E800E80E	8
	Command register_10	SPCMD_10	16	H'E800E810	16
	Command register_11	SPCMD_11	16	H'E800E812	16
	Command register_12	SPCMD_12	16	H'E800E814	16
	Command register_13	SPCMD_13	16	H'E800E816	16
	Buffer control register_1	SPBFCR_1	8	H'E800E820	8, 16
	Buffer data count setting register_1	SPBFDR_1	16	H'E800E822	16

chanhvinh.com

Module Name	Register Name	Abbreviation	Number of Bits	Address	Access Size
Renesas quad serial peripheral interface	Control register_0	SPCR_0	8	H'E8033800	8, 16, 32
	Slave select polarity register_0	SSLP_0	8	H'E8033801	8, 16, 32
	Pin control register_0	SPPCR_0	8	H'E8033802	8, 16, 32
	Status register_0	SPSR_0	8	H'E8033803	8, 16, 32
	Data register_0	SPDR_0	32	H'E8033804	8, 16, 32
	Sequence control register_0	SPSCR_0	8	H'E8033808	8, 16, 32
	Sequence status register_0	SPSSR_0	8	H'E8033809	8, 16, 32
	Bit rate register_0	SPBR_0	8	H'E803380A	8, 16, 32
	Data control register_0	SPDCR_0	8	H'E803380B	8, 16, 32
	Clock delay register_0	SPCKD_0	8	H'E803380C	8, 16, 32
	Slave select negation delay register_0	SSLND_0	8	H'E803380D	8, 16, 32
	Next-access delay register_0	SPND_0	8	H'E803380E	8, 16, 32
	Command register 0_0	SPCMD0_0	16	H'E8033810	16, 32
	Command register 1_0	SPCMD1_0	16	H'E8033812	16, 32
	Command register 2_0	SPCMD2_0	16	H'E8033814	16, 32
	Command register 3_0	SPCMD3_0	16	H'E8033816	16, 32
	Buffer control register_0	SPBFCR_0	8	H'E8033818	8, 16, 32
	Buffer data count setting register_0	SPBDCR_0	16	H'E803381A	16, 32
	Transfer data length multiplier setting register 0_0	SPBMUL0_0	32	H'E803381C	32
	Transfer data length multiplier setting register 1_0	SPBMUL1_0	32	H'E8033820	32
	Transfer data length multiplier setting register 2_0	SPBMUL2_0	32	H'E8033824	32
	Transfer data length multiplier setting register 3_0	SPBMUL3_0	32	H'E8033828	32
	Control register_1	SPCR_1	8	H'E8034000	8, 16, 32
	Slave select polarity register_1	SSLP_1	8	H'E8034001	8, 16, 32
	Pin control register_1	SPPCR_1	8	H'E8034002	8, 16, 32
	Status register_1	SPSR_1	8	H'E8034003	8, 16, 32
	Data register_1	SPDR_1	32	H'E8034004	8, 16, 32
	Sequence control register_1	SPSCR_1	8	H'E8034008	8, 16, 32
	Sequence status register_1	SPSSR_1	8	H'E8034009	8, 16, 32

chanhvinh.com

Module Name	Register Name	Abbreviation	Number of Bits	Address	Access Size
Renesas quad serial peripheral interface	Bit rate register_1	SPBR_1	8	H'E803400A	8, 16, 32
	Data control register_1	SPDCR_1	8	H'E803400B	8, 16, 32
	Clock delay register_1	SPCKD_1	8	H'E803400C	8, 16, 32
	Slave select negation delay register_1	SSLND_1	8	H'E803400D	8, 16, 32
	Next-access delay register_1	SPND_1	8	H'E803400E	8, 16, 32
	Command register 0_1	SPCMD0_1	16	H'E8034010	16, 32
	Command register 1_1	SPCMD1_1	16	H'E8034012	16, 32
	Command register 2_1	SPCMD2_1	16	H'E8034014	16, 32
	Command register 3_1	SPCMD3_1	16	H'E8034016	16, 32
	Buffer control register_1	SPBFCR_1	8	H'E8034018	8, 16, 32
	Buffer data count setting register_1	SPBDCR_1	16	H'E803401A	16, 32
	Transfer data length multiplier setting register 0_1	SPBMUL0_1	32	H'E803401C	32
	Transfer data length multiplier setting register 1_1	SPBMUL1_1	32	H'E8034020	32
	Transfer data length multiplier setting register 2_1	SPBMUL2_1	32	H'E8034024	32
	Transfer data length multiplier setting register 3_1	SPBMUL3_1	32	H'E8034028	32
SPI Multi I/O Bus Controller	Common control register	CMNCR	32	H'FFFC1C00	32
	SSL delay register	SSLDR	32	H'FFFC1C04	32
	Bit rate register	SPBCR	32	H'FFFC1C08	32
	Data read control register	DRCR	32	H'FFFC1C0C	32
	Data read command setting register	DRCMR	32	H'FFFC1C10	32
	Data read extended address setting register	DREAR	32	H'FFFC1C14	32
	Data read option setting register	DROPR	32	H'FFFC1C18	32
	Data read enable setting register	DRENR	32	H'FFFC1C1C	32
	SPI mode control register	SMCR	32	H'FFFC1C20	32
	SPI mode command setting register	SMCMR	32	H'FFFC1C24	32
	SPI mode address setting register	SMADR	32	H'FFFC1C28	32
	SPI mode option setting register	SMOPR	32	H'FFFC1C2C	32
	SPI mode enable setting register	SMENR	32	H'FFFC1C30	32

chanhvinh.com

Module Name	Register Name	Abbreviation	Number of Bits	Address	Access Size
SPI Multi I/O Bus Controller	SPI mode read data register 0	SMRDR0	32	H'FFFC1C38	8, 16, 32
	SPI mode read data register 1	SMRDR1	32	H'FFFC1C3C	8, 16, 32
	SPI mode write data register 0	SMWDR0	32	H'FFFC1C40	8, 16, 32
	SPI mode write data register 1	SMWDR1	32	H'FFFC1C44	8, 16, 32
	Common status register	CMNSR	32	H'FFFC1C48	32
I²C bus interface 3	I²C bus control register 1_0	ICCR1_0	8	H'FFFEE000	8
	I²C bus control register 2_0	ICCR2_0	8	H'FFFEE001	8
	I²C bus mode register_0	ICMR_0	8	H'FFFEE002	8
	I²C bus interrupt enable register_0	ICIER_0	8	H'FFFEE003	8
	I²C bus status register_0	ICSR_0	8	H'FFFEE004	8
	Slave address register_0	SAR_0	8	H'FFFEE005	8
	I²C bus transmit data register_0	ICDRT_0	8	H'FFFEE006	8
	I²C bus receive data register_0	ICDRR_0	8	H'FFFEE007	8
	NF2CYC register_0	NF2CYC_0	8	H'FFFEE008	8
	I²C bus control register 1_1	ICCR1_1	8	H'FFFEE400	8
	I²C bus control register 2_1	ICCR2_1	8	H'FFFEE401	8
	I²C bus mode register_1	ICMR_1	8	H'FFFEE402	8
	I²C bus interrupt enable register_1	ICIER_1	8	H'FFFEE403	8
	I²C bus status register_1	ICSR_1	8	H'FFFEE404	8
	Slave address register_1	SAR_1	8	H'FFFEE405	8
	I²C bus transmit data register_1	ICDRT_1	8	H'FFFEE406	8
	I²C bus receive data register_1	ICDRR_1	8	H'FFFEE407	8
	NF2CYC register_1	NF2CYC_1	8	H'FFFEE408	8
	I²C bus control register 1_2	ICCR1_2	8	H'FFFEE800	8
	I²C bus control register 2_2	ICCR2_2	8	H'FFFEE801	8
	I²C bus mode register_2	ICMR_2	8	H'FFFEE802	8
	I²C bus interrupt enable register_2	ICIER_2	8	H'FFFEE803	8
	I²C bus status register_2	ICSR_2	8	H'FFFEE804	8
	Slave address register_2	SAR_2	8	H'FFFEE805	8
	I²C bus transmit data register_2	ICDRT_2	8	H'FFFEE806	8
	I²C bus receive data register_2	ICDRR_2	8	H'FFFEE807	8
	NF2CYC register_2	NF2CYC_2	8	H'FFFEE808	8

chanhvinh.com

Module Name	Register Name	Abbreviation	Number of Bits	Address	Access Size
I²C bus interface 3	I²C bus control register 1_3	ICCR1_3	8	H'FFFEEC00	8
	I²C bus control register 2_3	ICCR2_3	8	H'FFFEEC01	8
	I²C bus mode register_3	ICMR_3	8	H'FFFEEC02	8
	I²C bus interrupt enable register_3	ICIER_3	8	H'FFFEEC03	8
	I²C bus status register_3	ICSR_3	8	H'FFFEEC04	8
	Slave address register_3	SAR_3	8	H'FFFEEC05	8
	I²C bus transmit data register_3	ICDRT_3	8	H'FFFEEC06	8
	I²C bus receive data register_3	ICDRR_3	8	H'FFFEEC07	8
	NF2CYC register_3	NF2CYC_3	8	H'FFFEEC08	8
Serial sound interface	Control register_0	SSICR_0	32	H'FFFF0000	8, 16, 32
	Status register_0	SSISR_0	32	H'FFFF0004	8, 16, 32
	FIFO control register_0	SSIFCR_0	32	H'FFFF0010	8, 16, 32
	FIFO status register_0	SSIFSR_0	32	H'FFFF0014	8, 16, 32
	Transmit FIFO data register_0	SSIFTDR_0	32	H'FFFF0018	32
	Receive FIFO data register_0	SSIFRDR_0	32	H'FFFF001C	32
	TDM mode register_0	SSITDMR_0	32	H'FFFF0020	8, 16, 32
	Control register_1	SSICR_1	32	H'FFFF0800	8, 16, 32
	Status register_1	SSISR_1	32	H'FFFF0804	8, 16, 32
	FIFO control register_1	SSIFCR_1	32	H'FFFF0810	8, 16, 32
	FIFO status register_1	SSIFSR_1	32	H'FFFF0814	8, 16, 32
	Transmit FIFO data register_1	SSIFTDR_1	32	H'FFFF0818	32
	Receive FIFO data register_1	SSIFRDR_1	32	H'FFFF081C	32
	TDM mode register_1	SSITDMR_1	32	H'FFFF0820	8, 16, 32
	Control register_2	SSICR_2	32	H'FFFF1000	8, 16, 32
	Status register_2	SSISR_2	32	H'FFFF1004	8, 16, 32
	FIFO control register_2	SSIFCR_2	32	H'FFFF1010	8, 16, 32
	FIFO status register_2	SSIFSR_2	32	H'FFFF1014	8, 16, 32
	Transmit FIFO data register_2	SSIFTDR_2	32	H'FFFF1018	32
	Receive FIFO data register_2	SSIFRDR_2	32	H'FFFF101C	32
	TDM mode register_2	SSITDMR_2	32	H'FFFF1020	8, 16, 32
	Control register_3	SSICR_3	32	H'FFFF1800	8, 16, 32
	Status register_3	SSISR_3	32	H'FFFF1804	8, 16, 32

chanhvinh.com

Module Name	Register Name	Abbreviation	Number of Bits	Address	Access Size
Serial sound interface	FIFO control register_3	SSIFCR_3	32	H'FFFF1810	8, 16, 32
	FIFO status register_3	SSIFSR_3	32	H'FFFF1814	8, 16, 32
	Transmit FIFO data register_3	SSIFTDR_3	32	H'FFFF1818	32
	Receive FIFO data register_3	SSIFRDR_3	32	H'FFFF181C	32
	TDM mode register_3	SSITDMR_3	32	H'FFFF1820	8, 16, 32
	Control register_4	SSICR_4	32	H'FFFF2000	8, 16, 32
	Status register_4	SSISR_4	32	H'FFFF2004	8, 16, 32
	FIFO control register_4	SSIFCR_4	32	H'FFFF2010	8, 16, 32
	FIFO status register_4	SSIFSR_4	32	H'FFFF2014	8, 16, 32
	Transmit FIFO data register_4	SSIFTDR_4	32	H'FFFF2018	32
	Receive FIFO data register_4	SSIFRDR_4	32	H'FFFF201C	32
	TDM mode register_4	SSITDMR_4	32	H'FFFF2020	8, 16, 32
	Control register_5	SSICR_5	32	H'FFFF2800	8, 16, 32
	Status register_5	SSISR_5	32	H'FFFF2804	8, 16, 32
	FIFO control register_5	SSIFCR_5	32	H'FFFF2810	8, 16, 32
	FIFO status register_5	SSIFSR_5	32	H'FFFF2814	8, 16, 32
	Transmit FIFO data register_5	SSIFTDR_5	32	H'FFFF2818	32
	Receive FIFO data register_5	SSIFRDR_5	32	H'FFFF281C	32
	TDM mode register_5	SSITDMR_5	32	H'FFFF2820	8, 16, 32
Serial I/O with FIFO	Mode register	SIMDR	16	H'FFFF4800	16
	Clock select register	SISCR	16	H'FFFF4802	16
	Transmit data assign register	SITDAR	16	H'FFFF4804	16
	Receive data assign register	SIRDAR	16	H'FFFF4806	16
	Control register	SICTR	16	H'FFFF480C	16
	FIFO control register	SIFCTR	16	H'FFFF4810	16
	Status register	SISTR	16	H'FFFF4814	16
	Interrupt enable register	SIIER	16	H'FFFF4816	16
	Transmit data register	SITDR	32	H'FFFF4820	8, 16, 32
	Receive data register	SIRDR	32	H'FFFF4824	8, 16, 32
Controller area network	Master Control Register_0	MCR_0	16	H'FFFE5000	16
	General Status Register_0	GSR_0	16	H'FFFE5002	16

chanhvinh.com

Module Name	Register Name	Abbreviation	Number of Bits	Address	Access Size
Controller area network	Bit Configuration Register 1_0	BCR1_0	16	H'FFFE5004	16
	Bit Configuration Register 0_0	BCR0_0	16	H'FFFE5006	16
	Interrupt Request Register_0	IRR_0	16	H'FFFE5008	16
	Interrupt Mask Register_0	IMR_0	16	H'FFFE500A	16
	Transmit/Receive Error Counter_0	TEC_REC_0	16	H'FFFE500C	8, 16
	Transmit Pending Register 1_0	TXPR1_0	16	H'FFFE5020	32
	Transmit Pending Register 0_0	TXPR0_0	16	H'FFFE5022	16
	Transmit Cancel Register 1_0	TXCR1_0	16	H'FFFE5028	16
	Transmit Cancel Register 0_0	TXCR0_0	16	H'FFFE502A	16
	Transmit Acknowledge Register 1_0	TXACK1_0	16	H'FFFE5030	16
	Transmit Acknowledge Register 0_0	TXACK0_0	16	H'FFFE5032	16
	Abort Acknowledge Register 1_0	ABACK1_0	16	H'FFFE5038	16
	Abort Acknowledge Register 0_0	ABACK0_0	16	H'FFFE503A	16
	Data Frame Receive Pending Register 1_0	RXPR1_0	16	H'FFFE5040	16
	Data Frame Receive Pending Register 0_0	RXPR0_0	16	H'FFFE5042	16
	Remote Frame Receive Pending Register 1_0	RFPR1_0	16	H'FFFE5048	16
	Remote Frame Receive Pending Register 0_0	RFPR0_0	16	H'FFFE504A	16
	Mailbox Interrupt Mask Register 1_0	MBIMR1_0	16	H'FFFE5050	16
	Mailbox Interrupt Mask Register 0_0	MBIMR0_0	16	H'FFFE5052	16
	Unread Message Status Register 1_0	UMSR1_0	16	H'FFFE5058	16
	Unread Message Status Register 0_0	UMSR0_0	16	H'FFFE505A	16
	Timer Trigger Control Register 0_0	TTCR0_0	16	H'FFFE5080	16
	Cycle Maximum/Tx-Enable Window Register_0	CMAX_TEW_0	16	H'FFFE5084	16
	Reference Trigger Offset Register_0	RFTROFF_0	16	H'FFFE5086	16
	Timer Status Register_0	TSR_0	16	H'FFFE5088	16
	Cycle Counter Register_0	CCR_0	16	H'FFFE508A	16
	Timer Counter Register_0	TCNTR_0	16	H'FFFE508C	16
	Cycle Time Register_0	CYCTR_0	16	H'FFFE5090	16

chanhvinh.com

Module Name	Register Name	Abbreviation	Number of Bits	Address	Access Size
Controller area network	Reference Mark Register_0	RFMK_0	16	H'FFFE5094	16
	Timer Compare Match Register 0_0	TCMR0_0	16	H'FFFE5098	16
	Timer Compare Match Register 1_0	TCMR1_0	16	H'FFFE509C	16
	Timer Compare Match Register 2_0	TCMR2_0	16	H'FFFE50A0	16
	Tx-Trigger Time Selection Register_0	TTTSEL_0	16	H'FFFE50A4	16
	Mailbox n Control 0 H_0 (n = 0 to 31)	MBn_CONTROL0_H_0 (n = 0 to 31)	16	H'FFFE5100 +n×32	16, 32
	Mailbox n Control 0 L_0 (n = 0 to 31)	MBn_CONTROL0_L_0 (n = 0 to 31)	16	H'FFFE5102 +n×32	16
	Mailbox n Local Acceptance Filter Mask 0_0 (n = 0 to 31)	MBn_LAFM0_0 (n = 0 to 31)	16	H'FFFE5104 +n×32	16, 32
	Mailbox n Local Acceptance Filter Mask 1_0 (n = 0 to 31)	MBn_LAFM1_0 (n = 0 to 31)	16	H'FFFE5106 +n×32	16
	Mailbox n data 01_0 (n = 0 to 31)	MBn_DATA_01_0 (n = 0 to 31)	16	H'FFFE5108 +n×32	8, 16, 32
	Mailbox n data 23_0 (n = 0 to 31)	MBn_DATA_23_0 (n = 0 to 31)	16	H'FFFE510A +n×32	8, 16
	Mailbox n data 45_0 (n = 0 to 31)	MBn_DATA_45_0 (n = 0 to 31)	16	H'FFFE510C +n×32	8, 16, 32
	Mailbox n data 67_0 (n = 0 to 31)	MBn_DATA_67_0 (n = 0 to 31)	16	H'FFFE510E +n×32	8, 16
	Mailbox n Control 1_0 (n = 0 to 31)	MBn_CONTROL1_0 (n = 0 to 31)	16	H'FFFE5110 +n×32	8, 16
	Mailbox n Timestamp_0 (n = 0 to 15, 30, 31)	MBn_TIMESTAMP_0 (n = 0 to 15, 30, 31)	16	H'FFFE5112 +n×32	16
	Mailbox n Trigger Time_0 (n = 24 to 30)	MBn_TTT_0 (n = 24 to 30)	16	H'FFFE5114 +n×32	16
	Mailbox n TTControl_0 (n = 24 to 29)	MBn_TTCONTROL_0 (n = 24 to 29)	16	H'FFFE5116 +n×32	16
	Master Control Register_1	MCR_1	16	H'FFFE5800	16
	General Status Register_1	GSR_1	16	H'FFFE5802	16
	Bit Configuration Register 1_1	BCR1_1	16	H'FFFE5804	16
	Bit Configuration Register 0_1	BCR0_1	16	H'FFFE5806	16
	Interrupt Request Register_1	IRR_1	16	H'FFFE5808	16

chanhvinh.com

Module Name	Register Name	Abbreviation	Number of Bits	Address	Access Size
Controller area network	Interrupt Mask Register_1	IMR_1	16	H'FFFE580A	16
	Transmit/Receive Error Counter_1	TEC_REC_1	16	H'FFFE580C	8, 16
	Transmit Pending Register 1_1	TXPR1_1	16	H'FFFE5820	32
	Transmit Pending Register 0_1	TXPR0_1	16	H'FFFE5822	16
	Transmit Cancel Register 1_1	TXCR1_1	16	H'FFFE5828	16
	Transmit Cancel Register 0_1	TXCR0_1	16	H'FFFE582A	16
	Transmit Acknowledge Register 1_1	TXACK1_1	16	H'FFFE5830	16
	Transmit Acknowledge Register 0_1	TXACK0_1	16	H'FFFE5832	16
	Abort Acknowledge Register 1_1	ABACK1_1	16	H'FFFE5838	16
	Abort Acknowledge Register 0_1	ABACK0_1	16	H'FFFE583A	16
	Data Frame Receive Pending Register 1_1	RXPR1_1	16	H'FFFE5840	16
	Data Frame Receive Pending Register 0_1	RXPR0_1	16	H'FFFE5842	16
	Remote Frame Receive Pending Register 1_1	RFPR1_1	16	H'FFFE5848	16
	Remote Frame Receive Pending Register 0_1	RFPR0_1	16	H'FFFE584A	16
	Mailbox Interrupt Mask Register 1_1	MBIMR1_1	16	H'FFFE5850	16
	Mailbox Interrupt Mask Register 0_1	MBIMR0_1	16	H'FFFE5852	16
	Unread Message Status Register 1_1	UMSR1_1	16	H'FFFE5858	16
	Unread Message Status Register 0_1	UMSR0_1	16	H'FFFE585A	16
	Timer Trigger Control Register 0_1	TTCR0_1	16	H'FFFE5880	16
	Cycle Maximum/Tx-Enable Window Register_1	CMAX_TEW_1	16	H'FFFE5884	16
	Reference Trigger Offset Register_1	RFTROFF_1	16	H'FFFE5886	16
	Timer Status Register_1	TSR_1	16	H'FFFE5888	16
	Cycle Counter Register_1	CCR_1	16	H'FFFE588A	16
	Timer Counter Register_1	TCNTR_1	16	H'FFFE588C	16
	Cycle Time Register_1	CYCTR_1	16	H'FFFE5890	16
	Reference Mark Register_1	RFMK_1	16	H'FFFE5894	16
	Timer Compare Match Register 0_1	TCMR0_1	16	H'FFFE5898	16
	Timer Compare Match Register 1_1	TCMR1_1	16	H'FFFE589C	16

chanhvinh.com

Module Name	Register Name	Abbreviation	Number of Bits	Address	Access Size
Controller area network	Timer Compare Match Register 2_1	TCMR2_1	16	H'FFFE58A0	16
	Tx-Trigger Time Selection Register_1	TTTSEL_1	16	H'FFFE58A4	16
	Mailbox n Control 0 H_1 (n = 0 to 31)	MBn_CONTROL0_H_1 (n = 0 to 31)	16	H'FFFE5900 +n×32	16, 32
	Mailbox n Control 0 L_1 (n = 0 to 31)	MBn_CONTROL0_L_1 (n = 0 to 31)	16	H'FFFE5902 +n×32	16
	Mailbox n Local Acceptance Filter Mask 0_1 (n = 0 to 31)	MBn_LAFM0_1 (n = 0 to 31)	16	H'FFFE5904 +n×32	16, 32
	Mailbox n Local Acceptance Filter Mask 1_1 (n = 0 to 31)	MBn_LAFM1_1 (n = 0 to 31)	16	H'FFFE5906 +n×32	16
	Mailbox n data 01_1 (n = 0 to 31)	MBn_DATA_01_1 (n = 0 to 31)	16	H'FFFE5908 +n×32	8, 16, 32
	Mailbox n data 23_1 (n = 0 to 31)	MBn_DATA_23_1 (n = 0 to 31)	16	H'FFFE590A +n×32	8, 16
	Mailbox n data 45_1 (n = 0 to 31)	MBn_DATA_45_1 (n = 0 to 31)	16	H'FFFE590C +n×32	8, 16, 32
	Mailbox n data 67_1 (n = 0 to 31)	MBn_DATA_67_1 (n = 0 to 31)	16	H'FFFE590E +n×32	8, 16
	Mailbox n Control 1_1 (n = 0 to 31)	MBn_CONTROL 1_1 (n = 0 to 31)	16	H'FFFE5910 +n×32	8, 16
	Mailbox n Timestamp_1 (n = 0 to 15, 30, 31)	MBn_TIMESTAMP_1 (n = 0 to 15, 30, 31)	16	H'FFFE5912 +n×32	16
	Mailbox n Trigger Time_1 (n = 24 to 30)	MBn_TTT_1 (n = 24 to 30)	16	H'FFFE5914 +n×32	16
	Mailbox n TTControl_1 (n = 24 to 29)	MBn_TTCONTROL_1 (n = 24 to 29)	16	H'FFFE5916 +n×32	16
	Master Control Register_2	MCR_2	16	H'FFFED800	16
	General Status Register_2	GSR_2	16	H'FFFED802	16
	Bit Configuration Register 1_2	BCR1_2	16	H'FFFED804	16
	Bit Configuration Register 0_2	BCR0_2	16	H'FFFED806	16
	Interrupt Request Register_2	IRR_2	16	H'FFFED808	16
	Interrupt Mask Register_2	IMR_2	16	H'FFFED80A	16
	Transmit/Receive Error Counter_2	TEC_REC_2	16	H'FFFED80C	8, 16
	Transmit Pending Register 1_2	TXPR1_2	16	H'FFFED820	32
	Transmit Pending Register 0_2	TXPR0_2	16	H'FFFED822	16

chanhvinh.com

Module Name	Register Name	Abbreviation	Number of Bits	Address	Access Size
Controller area network	Transmit Cancel Register 1_2	TXCR1_2	16	H'FFFED828	16
	Transmit Cancel Register 0_2	TXCR0_2	16	H'FFFED82A	16
	Transmit Acknowledge Register 1_2	TXACK1_2	16	H'FFFED830	16
	Transmit Acknowledge Register 0_2	TXACK0_2	16	H'FFFED832	16
	Abort Acknowledge Register 1_2	ABACK1_2	16	H'FFFED838	16
	Abort Acknowledge Register 0_2	ABACK0_2	16	H'FFFED83A	16
	Data Frame Receive Pending Register 1_2	RXPR1_2	16	H'FFFED840	16
	Data Frame Receive Pending Register 0_2	RXPR0_2	16	H'FFFED842	16
	Remote Frame Receive Pending Register 1_2	RFPR1_2	16	H'FFFED848	16
	Remote Frame Receive Pending Register 0_2	RFPR0_2	16	H'FFFED84A	16
	Mailbox Interrupt Mask Register 1_2	MBIMR1_2	16	H'FFFED850	16
	Mailbox Interrupt Mask Register 0_2	MBIMR0_2	16	H'FFFED852	16
	Unread Message Status Register 1_2	UMSR1_2	16	H'FFFED858	16
	Unread Message Status Register 0_2	UMSR0_2	16	H'FFFED85A	16
	Timer Trigger Control Register 0_2	TTCR0_2	16	H'FFFED880	16
	Cycle Maximum/Tx-Enable Window Register_2	CMAX_TEW_2	16	H'FFFED884	16
	Reference Trigger Offset Register_2	RFTROFF_2	16	H'FFFED886	16
	Timer Status Register_2	TSR_2	16	H'FFFED888	16
	Cycle Counter Register_2	CCR_2	16	H'FFFED88A	16
	Timer Counter Register_2	TCNTR_2	16	H'FFFED88C	16
	Cycle Time Register_2	CYCTR_2	16	H'FFFED890	16
	Reference Mark Register_2	RFMK_2	16	H'FFFED894	16
	Timer Compare Match Register 0_2	TCMR0_2	16	H'FFFED898	16
	Timer Compare Match Register 1_2	TCMR1_2	16	H'FFFED89C	16
	Timer Compare Match Register 2_2	TCMR2_2	16	H'FFFED8A0	16
	Tx-Trigger Time Selection Register_2	TTTSEL_2	16	H'FFFED8A4	16
	Mailbox n Control 0 H_2 (n = 0 to 31)	MBn_CONTROL0_H_2 (n = 0 to 31)	16	H'FFFED900 +n×32	16, 32

chanhvinh.com

Module Name	Register Name	Abbreviation	Number of Bits	Address	Access Size
Controller area network	Mailbox n Control 0 L_2 (n = 0 to 31)	MBn_CONTROL0_L_2 (n = 0 to 31)	16	H'FFFED902 +n×32	16
	Mailbox n Local Acceptance Filter Mask 0_2 (n = 0 to 31)	MBn_LAFM0_2 (n = 0 to 31)	16	H'FFFED904 +n×32	16, 32
	Mailbox n Local Acceptance Filter Mask 1_2 (n = 0 to 31)	MBn_LAFM1_2 (n = 0 to 31)	16	H'FFFED906 +n×32	16
	Mailbox n data 01_2 (n = 0 to 31)	MBn_DATA_01_2 (n = 0 to 31)	16	H'FFFED908 +n×32	8, 16, 32
	Mailbox n data 23_2 (n = 0 to 31)	MBn_DATA_23_2 (n = 0 to 31)	16	H'FFFED90A +n×32	8, 16
	Mailbox n data 45_2 (n = 0 to 31)	MBn_DATA_45_2 (n = 0 to 31)	16	H'FFFED90C +n×32	8, 16, 32
	Mailbox n data 67_2 (n = 0 to 31)	MBn_DATA_67_2 (n = 0 to 31)	16	H'FFFED90E +n×32	8, 16
	Mailbox n Control 1_2 (n = 0 to 31)	MBn_CONTROL1_2 (n = 0 to 31)	16	H'FFFED910 +n×32	8, 16
	Mailbox n Timestamp_2 (n = 0 to 15, 30, 31)	MBn_TIMESTAMP_2 (n = 0 to 15, 30, 31)	16	H'FFFED912 +n×32	16
	Mailbox n Trigger Time_2 (n = 24 to 30)	MBn_TTT_2 (n = 24 to 30)	16	H'FFFED914 +n×32	16
	Mailbox n TTControl_2 (n = 24 to 29)	MBn_TTCONTROL_2 (n = 24 to 29)	16	H'FFFED916 +n×32	16
IEBus™ controller	IEBus control register	IECTR	8	H'FFFEF000	8
	IEBus command register	IECMR	8	H'FFFEF001	8
	IEBus master control register	IEMCR	8	H'FFFEF002	8
	IEBus master unit address register 1	IEAR1	8	H'FFFEF003	8
	IEBus master unit address register 2	IEAR2	8	H'FFFEF004	8
	IEBus slave address setting register 1	IESA1	8	H'FFFEF005	8
	IEBus slave address setting register 2	IESA2	8	H'FFFEF006	8
	IEBus transmit message length register	IETBFL	8	H'FFFEF007	8
	IEBus reception master address register 1	IEMA1	8	H'FFFEF009	8
	IEBus reception master address register 2	IEMA2	8	H'FFFEF00A	8

chanhvinh.com

Module Name	Register Name	Abbreviation	Number of Bits	Address	Access Size
IEBus™ controller	IEBus receive control field register	IERCTL	8	H'FFFEF00B	8
	IEBus receive message length register	IERBFL	8	H'FFFEF00C	8
	IEBus lock address register 1	IELA1	8	H'FFFEF00E	8
	IEBus lock address register 2	IELA2	8	H'FFFEF00F	8
	IEBus general flag register	IEFLG	8	H'FFFEF010	8
	IEBus transmit status register	IETSR	8	H'FFFEF011	8
	IEBus transmit interrupt enable register	IEIET	8	H'FFFEF012	8
	IEBus receive status register	IERSR	8	H'FFFEF014	8
	IEBus receive interrupt enable register	IEIER	8	H'FFFEF015	8
	IEBus clock select register	IECKSR	8	H'FFFEF018	8
	IEBus transmit data buffer registers 001 to 128	IETB001 to IETB128	8	H'FFFEF100 to H'FFFEF17F	8
	IEBus receive data buffer registers 001 to 128	IERB001 to IERB128	8	H'FFFEF200 to H'FFFEF27F	8
Renesas SPDIF interface	Transmitter channel 1 audio register	TLCA	32	H'E8012000	32
	Transmitter channel 2 audio register	TRCA	32	H'E8012004	32
	Transmitter channel 1 status register	TLCS	32	H'E8012008	32
	Transmitter channel 2 status register	TRCS	32	H'E801200C	32
	Transmitter user data register	TUI	32	H'E8012010	32
	Receiver channel 1 audio register	RLCA	32	H'E8012014	32
	Receiver channel 2 audio register	RRCA	32	H'E8012018	32
	Receiver channel 1 status register	RLCS	32	H'E801201C	32
	Receiver channel 2 status register	RRCS	32	H'E8012020	32
	Receiver user data register	RUI	32	H'E8012024	32
	Control register	CTRL	32	H'E8012028	32
	Status register	STAT	32	H'E801202C	32
	Transmitter DMA audio data register	TDAD	32	H'E8012030	32
	Receiver DMA audio data register	RDAD	32	H'E8012034	32

chanhvinh.com

Module Name	Register Name	Abbreviation	Number of Bits	Address	Access Size
CD-ROM decoder	Enable control register	CROMEN	8	H'E8005000	8
	Sync code-based synchronization control register	CROMSY0	8	H'E8005001	8
	Decoding mode control register	CROMCTL0	8	H'E8005002	8
	EDC/ECC check control register	CROMCTL1	8	H'E8005003	8
	Automatic decoding stop control register	CROMCTL3	8	H'E8005005	8
	Decoding option setting control register	CROMCTL4	8	H'E8005006	8
	HEAD20 to HEAD22 representation control register	CROMCTL5	8	H'E8005007	8
	Sync code status register	CROMST0	8	H'E8005008	8
	Post-ECC header error status register	CROMST1	8	H'E8005009	8
	Post-ECC subheader error status register	CROMST3	8	H'E800500B	8
	Header/subheader validity check status register	CROMST4	8	H'E800500C	8
	Mode determination and link sector detection status register	CROMST5	8	H'E800500D	8
	ECC/EDC error status register	CROMST6	8	H'E800500E	8
	Buffer status register	CBUFST0	8	H'E8005014	8
	Decoding stoppage source status register	CBUFST1	8	H'E8005015	8
	Buffer overflow status register	CBUFST2	8	H'E8005016	8
	Pre-ECC correction header: minutes data register	HEAD00	8	H'E8005018	8
	Pre-ECC correction header: seconds data register	HEAD01	8	H'E8005019	8
	Pre-ECC correction header: frames (1/75 second) data register	HEAD02	8	H'E800501A	8
	Pre-ECC correction header: mode data register	HEAD03	8	H'E800501B	8
	Pre-ECC correction subheader: file number (byte 16) data register	SHEAD00	8	H'E800501C	8
	Pre-ECC correction subheader: channel number (byte 17) data register	SHEAD01	8	H'E800501D	8

chanhvinh.com

Module Name	Register Name	Abbreviation	Number of Bits	Address	Access Size
CD-ROM decoder	Pre-ECC correction subheader: sub-mode (byte 18) data register	SHEAD02	8	H'E800501E	8
	Pre-ECC correction subheader: data type (byte 19) data register	SHEAD03	8	H'E800501F	8
	Pre-ECC correction subheader: file number (byte 20) data register	SHEAD04	8	H'E8005020	8
	Pre-ECC correction subheader: channel number (byte 21) data register	SHEAD05	8	H'E8005021	8
	Pre-ECC correction subheader: sub-mode (byte 22) data register	SHEAD06	8	H'E8005022	8
	Pre-ECC correction subheader: data type (byte 23) data register	SHEAD07	8	H'E8005023	8
	Post-ECC correction header: minutes data register	HEAD20	8	H'E8005024	8
	Post-ECC correction header: seconds data register	HEAD21	8	H'E8005025	8
	Post-ECC correction header: frames (1/75 second) data register	HEAD22	8	H'E8005026	8
	Post-ECC correction header: mode data register	HEAD23	8	H'E8005027	8
	Post-ECC correction subheader: file number (byte 16) data register	SHEAD20	8	H'E8005028	8
	Post-ECC correction subheader: channel number (byte 17) data register	SHEAD21	8	H'E8005029	8
	Post-ECC correction subheader: sub-mode (byte 18) data register	SHEAD22	8	H'E800502A	8
	Post-ECC correction subheader: data type (byte 19) data register	SHEAD23	8	H'E800502B	8
	Post-ECC correction subheader: file number (byte 20) data register	SHEAD24	8	H'E800502C	8
	Post-ECC correction subheader: channel number (byte 21) data register	SHEAD25	8	H'E800502D	8
	Post-ECC correction subheader: sub-mode (byte 22) data register	SHEAD26	8	H'E800502E	8
	Post-ECC correction subheader: data type (byte 23) data register	SHEAD27	8	H'E800502F	8

chanhvinh.com

Module Name	Register Name	Abbreviation	Number of Bits	Address	Access Size
CD-ROM decoder	Automatic buffering setting control register	CBUFCTL0	8	H'E8005040	8
	Automatic buffering start sector setting: minutes control register	CBUFCTL1	8	H'E8005041	8
	Automatic buffering start sector setting: seconds control register	CBUFCTL2	8	H'E8005042	8
	Automatic buffering start sector setting: frames control register	CBUFCTL3	8	H'E8005043	8
	ISY interrupt source mask control register	CROMST0M	8	H'E8005045	8
	CD-ROM decoder reset control register	ROMDECRST	8	H'E8005100	8
	CD-ROM decoder reset status register	RSTSTAT	8	H'E8005101	8
	Serial sound interface data control register	SSI	8	H'E8005102	8
	Interrupt flag register	INTHOLD	8	H'E8005108	8
	Interrupt source mask control register	INHINT	8	H'E8005109	8
	CD-ROM decoder stream data input register	STRMDIN0	16	H'E8005200	16, 32*
	CD-ROM decoder stream data input register	STRMDIN2	16	H'E8005202	16
	CD-ROM decoder stream data output register	STRMDOUT0	16	H'E8005204	16, 32
A/D converter	A/D data register A	ADDRA	16	H'E8005800	16
	A/D data register B	ADDRB	16	H'E8005802	16
	A/D data register C	ADDRC	16	H'E8005804	16
	A/D data register D	ADDRD	16	H'E8005806	16
	A/D data register E	ADDRE	16	H'E8005808	16
	A/D data register F	ADDRF	16	H'E800580A	16
	A/D data register G	ADDRG	16	H'E800580C	16
	A/D data register H	ADDRH	16	H'E800580E	16
	A/D control/status register	ADCSR	16	H'E8005820	16

chanhvinh.com

Module Name	Register Name	Abbreviation	Number of Bits	Address	Access Size
NAND flash memory controller	Common control register	FLCMNCR	32	H'FFFF4000	32
	Command control register	FLCMDCR	32	H'FFFF4004	32
	Command code register	FLCMCDR	32	H'FFFF4008	32
	Address register	FLADR	32	H'FFFF400C	32
	Address register 2	FLADR2	32	H'FFFF403C	32
	Data register	FLDATAR	32	H'FFFF4010	32
	Data counter register	FLDTCNTR	32	H'FFFF4014	32
	Interrupt DMA control register	FLINTDMACR	32	H'FFFF4018	32
	Ready busy timeout setting register	FLBSYTMR	32	H'FFFF401C	32
	Ready busy timeout counter	FLBSYCNT	32	H'FFFF4020	32
	Data FIFO register	FLDTFIFO	32	H'FFFF4050	32
	Control code FIFO register	FLECFIFO	32	H'FFFF4060	32
	Transfer control register	FLTRCR	8	H'FFFF402C	8
	Bus hold time setting register	FLHOLDCR	32	H'FFFF4038	32
USB 2.0 host/function module	System configuration control register	SYSCFG	16	H'E8010000	16
	CPU bus wait setting register	BUSWAIT	16	H'E8010002	16
	System configuration status register	SYSSTS	16	H'E8010004	16
	Device state control register	DVSTCTR	16	H'E8010008	16
	Test mode register	TESTMODE	16	H'E801000C	16
	DMA0-FIFO bus configuration register	D0FBCFG	16	H'E8010010	16
	DMA1-FIFO bus configuration register	D1FBCFG	16	H'E8010012	16
	CFIFO port register	CFIFO	32	H'E8010014	8, 16, 32
	D0FIFO port register	D0FIFO	32	H'E8010018	8, 16, 32
	D1FIFO port register	D1FIFO	32	H'E801001C	8, 16, 32
	CFIFO port select register	CFIFOSEL	16	H'E8010020	16
	CFIFO port control register	CFIFOCTR	16	H'E8010022	16
	D0FIFO port select register	D0FIFOSEL	16	H'E8010028	16
	D0FIFO port control register	D0FIFOCTR	16	H'E801002A	16
	D1FIFO port select register	D1FIFOSEL	16	H'E801002C	16
	D1FIFO port control register	D1FIFOCTR	16	H'E801002E	16
	Interrupt enable register 0	INTENB0	16	H'E8010030	16
	Interrupt enable register 1	INTENB1	16	H'E8010032	16

chanhvinh.com

Module Name	Register Name	Abbreviation	Number of Bits	Address	Access Size
USB 2.0 host/function module	BRDY interrupt enable register	BRDYENB	16	H'E8010036	16
	NRDY interrupt enable register	NRDYENB	16	H'E8010038	16
	BEMP interrupt enable register	BEMPENB	16	H'E801003A	16
	SOF output configuration register	SOFCFG	16	H'E801003C	16
	Interrupt status register 0	INTSTS0	16	H'E8010040	16
	Interrupt status register 1	INTSTS1	16	H'E8010042	16
	BRDY interrupt status register	BRDYSTS	16	H'E8010046	16
	NRDY interrupt status register	NRDYSTS	16	H'E8010048	16
	BEMP interrupt status register	BEMPSTS	16	H'E801004A	16
	Frame number register	FRMNUM	16	H'E801004C	16
	μFrame number register	UFRMNUM	16	H'E801004E	16
	USB address register	USBADDR	16	H'E8010050	16
	USB request type register	USBREQ	16	H'E8010054	16
	USB request value register	USBVAL	16	H'E8010056	16
	USB request index register	USBINDX	16	H'E8010058	16
	USB request length register	USBLENG	16	H'E801005A	16
	DCP configuration register	DCPCFG	16	H'E801005C	16
	DCP maximum packet size register	DCPMAXP	16	H'E801005E	16
	DCP control register	DCPCTR	16	H'E8010060	16
	Pipe window select register	PIPESEL	16	H'E8010064	16
	Pipe configuration register	PIPECFG	16	H'E8010068	16
	Pipe buffer setting register	PIPEBUF	16	H'E801006A	16
	Pipe maximum packet size register	PIPEMAXP	16	H'E801006C	16
	Pipe cycle control register	PIPEPERI	16	H'E801006E	16
	Pipe 1 control register	PIPE1CTR	16	H'E8010070	16
	Pipe 2 control register	PIPE2CTR	16	H'E8010072	16
	Pipe 3 control register	PIPE3CTR	16	H'E8010074	16
	Pipe 4 control register	PIPE4CTR	16	H'E8010076	16
	Pipe 5 control register	PIPE5CTR	16	H'E8010078	16
	Pipe 6 control register	PIPE6CTR	16	H'E801007A	16
	Pipe 7 control register	PIPE7CTR	16	H'E801007C	16
	Pipe 8 control register	PIPE8CTR	16	H'E801007E	16

chanhvinh.com

Module Name	Register Name	Abbreviation	Number of Bits	Address	Access Size
USB 2.0 host/function module	Pipe 9 control register	PIPE9CTR	16	H'E8010080	16
	Pipe 1 transaction counter enable register	PIPE1TRE	16	H'E8010090	16
	Pipe 1 transaction counter register	PIPE1TRN	16	H'E8010092	16
	Pipe 2 transaction counter enable register	PIPE2TRE	16	H'E8010094	16
	Pipe 2 transaction counter register	PIPE2TRN	16	H'E8010096	16
	Pipe 3 transaction counter enable register	PIPE3TRE	16	H'E8010098	16
	Pipe 3 transaction counter register	PIPE3TRN	16	H'E801009A	16
	Pipe 4 transaction counter enable register	PIPE4TRE	16	H'E801009C	16
	Pipe 4 transaction counter register	PIPE4TRN	16	H'E801009E	16
	Pipe 5 transaction counter enable register	PIPE5TRE	16	H'E80100A0	16
	Pipe 5 transaction counter register	PIPE5TRN	16	H'E80100A2	16
	Device address 0 configuration register	DEVADD0	16	H'E80100D0	16
	Device address 1 configuration register	DEVADD1	16	H'E80100D2	16
	Device address 2 configuration register	DEVADD2	16	H'E80100D4	16
	Device address 3 configuration register	DEVADD3	16	H'E80100D6	16
	Device address 4 configuration register	DEVADD4	16	H'E80100D8	16
	Device address 5 configuration register	DEVADD5	16	H'E80100DA	16
	Device address 6 configuration register	DEVADD6	16	H'E80100DC	16
	Device address 7 configuration register	DEVADD7	16	H'E80100DE	16
	Device address 8 configuration register	DEVADD8	16	H'E80100E0	16
	Device address 9 configuration register	DEVADD9	16	H'E80100E2	16
	Device address A configuration register	DEVADDA	16	H'E80100E4	16
Digital video decoder	ADC control register 1	ADCCR1	16	H'FFFFA008	16
	Timing generation control register 1	TGCR1	16	H'FFFFA00E	16
	Timing generation control register 2	TGCR2	16	H'FFFFA010	16
	Timing generation control register 3	TGCR3	16	H'FFFFA012	16
	Sync separation control register 1	SYNSCR1	16	H'FFFFA01A	16
	Sync separation control register 2	SYNSCR2	16	H'FFFFA01C	16

chanhvinh.com

Module Name	Register Name	Abbreviation	Number of Bits	Address	Access Size
Digital video decoder	Sync separation control register 3	SYNSCR3	16	H'FFFFA01E	16
	Sync separation control register 4	SYNSCR4	16	H'FFFFA020	16
	Sync separation control register 5	SYNSCR5	16	H'FFFFA022	16
	Horizontal AFC control register 1	HAFCCR1	16	H'FFFFA024	16
	Horizontal AFC control register 2	HAFCCR2	16	H'FFFFA026	16
	Horizontal AFC control register 3	HAFCCR3	16	H'FFFFA028	16
	Vertical countdown control register 1	VCDWCR1	16	H'FFFFA02A	16
	Digital clamp control register 1	DCPCR1	16	H'FFFFA030	16
	Digital clamp control register 2	DCPCR2	16	H'FFFFA032	16
	Digital clamp control register 3	DCPCR3	16	H'FFFFA034	16
	Digital clamp control register 4	DCPCR4	16	H'FFFFA036	16
	Digital clamp control register 5	DCPCR5	16	H'FFFFA038	16
	Digital clamp control register 6	DCPCR6	16	H'FFFFA03A	16
	Digital clamp control register 7	DCPCR7	16	H'FFFFA03C	16
	Digital clamp control register 8	DCPCR8	16	H'FFFFA03E	16
	Noise detection control register	NSDCR	16	H'FFFFA040	16
	Burst lock/chroma decoding control register	BTLCR	16	H'FFFFA042	16
	Burst gate pulse control register	BTGPCR	16	H'FFFFA044	16
	ACC control register 1	ACCCR1	16	H'FFFFA046	16
	ACC control register 2	ACCCR2	16	H'FFFFA048	16
	ACC control register 3	ACCCR3	16	H'FFFFA04A	16
	TINT control register	TINTCR	16	H'FFFFA04C	16
	Y/C delay/chroma decoding control register	YCDCR	16	H'FFFFA04E	16
	AGC control register 1	AGCCR1	16	H'FFFFA050	16
	AGC control register 2	AGCCR2	16	H'FFFFA052	16
	Peak limiter control register	PKLIMITCR	16	H'FFFFA054	16
	Over-range control register 1	RGORCR1	16	H'FFFFA056	16
	Over-range control register 2	RGORCR2	16	H'FFFFA058	16
	Over-range control register 3	RGORCR3	16	H'FFFFA05A	16
	Over-range control register 4	RGORCR4	16	H'FFFFA05C	16

chanhvinh.com

Module Name	Register Name	Abbreviation	Number of Bits	Address	Access Size
Digital video decoder	Over-range control register 5	RGORCR5	16	H'FFFFA05E	16
	Over-range control register 6	RGORCR6	16	H'FFFFA060	16
	Over-range control register 7	RGORCR7	16	H'FFFFA062	16
	Feedback control register for horizontal AFC phase comparator	AFCPFCR	16	H'FFFFA07C	16
	Register update enable register	RUPDCR	16	H'FFFFA07E	16
	Sync separation status/vertical cycle read register	VSYNCSR	16	H'FFFFA080	16
	Horizontal cycle read register	HSYNCSR	16	H'FFFFA082	16
	Digital clamp read register 1	DCPSR1	16	H'FFFFA084	16
	Digital clamp read register 2	DCPSR2	16	H'FFFFA086	16
	Noise detection read register	NSDSR	16	H'FFFFA08C	16
	Chroma decoding read register 1	CROMASR1	16	H'FFFFA08E	16
	Chroma decoding read register 2	CROMASR2	16	H'FFFFA090	16
	Sync separation read register	SYNCSSR	16	H'FFFFA092	16
	AGC control read register 1	AGCCSR1	16	H'FFFFA094	16
	AGC control read register 2	AGCCSR2	16	H'FFFFA096	16
	Y/C separation control register 3	YCSCR3	16	H'FFFFA104	16
	Y/C separation control register 4	YCSCR4	16	H'FFFFA106	16
	Y/C separation control register 5	YCSCR5	16	H'FFFFA108	16
	Y/C separation control register 6	YCSCR6	16	H'FFFFA10A	16
	Y/C separation control register 7	YCSCR7	16	H'FFFFA10C	16
	Y/C separation control register 8	YCSCR8	16	H'FFFFA10E	16
	Y/C separation control register 9	YCSCR9	16	H'FFFFA110	16
	Y/C separation control register 11	YCSCR11	16	H'FFFFA114	16
	Y/C separation control register 12	YCSCR12	16	H'FFFFA116	16
	Digital clamp control register 9	DCPCR9	16	H'FFFFA180	16
	Chroma filter TAP coefficient (WA_F0) register for Y/C separation	YCTWA_F0	16	H'FFFFA192	16
	Chroma filter TAP coefficient (WA_F1) register for Y/C separation	YCTWA_F1	16	H'FFFFA194	16
	Chroma filter TAP coefficient (WA_F2) register for Y/C separation	YCTWA_F2	16	H'FFFFA196	16

chanhvinh.com

Module Name	Register Name	Abbreviation	Number of Bits	Address	Access Size
Digital video decoder	Chroma filter TAP coefficient (WA_F3) register for Y/C separation	YCTWA_F3	16	H'FFFFA198	16
	Chroma filter TAP coefficient (WA_F4) register for Y/C separation	YCTWA_F4	16	H'FFFFA19A	16
	Chroma filter TAP coefficient (WA_F5) register for Y/C separation	YCTWA_F5	16	H'FFFFA19C	16
	Chroma filter TAP coefficient (WA_F6) register for Y/C separation	YCTWA_F6	16	H'FFFFA19E	16
	Chroma filter TAP coefficient (WA_F7) register for Y/C separation	YCTWA_F7	16	H'FFFFA1A0	16
	Chroma filter TAP coefficient (WA_F8) register for Y/C separation	YCTWA_F8	16	H'FFFFA1A2	16
	Chroma filter TAP coefficient (WB_F0) register for Y/C separation	YCTWB_F0	16	H'FFFFA1A4	16
	Chroma filter TAP coefficient (WB_F1) register for Y/C separation	YCTWB_F1	16	H'FFFFA1A6	16
	Chroma filter TAP coefficient (WB_F2) register for Y/C separation	YCTWB_F2	16	H'FFFFA1A8	16
	Chroma filter TAP coefficient (WB_F3) register for Y/C separation	YCTWB_F3	16	H'FFFFA1AA	16
	Chroma filter TAP coefficient (WB_F4) register for Y/C separation	YCTWB_F4	16	H'FFFFA1AC	16
	Chroma filter TAP coefficient (WB_F5) register for Y/C separation	YCTWB_F5	16	H'FFFFA1AE	16
	Chroma filter TAP coefficient (WB_F6) register for Y/C separation	YCTWB_F6	16	H'FFFFA1B0	16
	Chroma filter TAP coefficient (WB_F7) register for Y/C separation	YCTWB_F7	16	H'FFFFA1B2	16
	Chroma filter TAP coefficient (WB_F8) register for Y/C separation	YCTWB_F8	16	H'FFFFA1B4	16
	Chroma filter TAP coefficient (NA_F0) register for Y/C separation	YCTNA_F0	16	H'FFFFA1B6	16
	Chroma filter TAP coefficient (NA_F1) register for Y/C separation	YCTNA_F1	16	H'FFFFA1B8	16
	Chroma filter TAP coefficient (NA_F2) register for Y/C separation	YCTNA_F2	16	H'FFFFA1BA	16

chanhvinh.com

Module Name	Register Name	Abbreviation	Number of Bits	Address	Access Size
Digital video decoder	Chroma filter TAP coefficient (NA_F3) register for Y/C separation	YCTNA_F3	16	H'FFFFA1BC	16
	Chroma filter TAP coefficient (NA_F4) register for Y/C separation	YCTNA_F4	16	H'FFFFA1BE	16
	Chroma filter TAP coefficient (NA_F5) register for Y/C separation	YCTNA_F5	16	H'FFFFA1C0	16
	Chroma filter TAP coefficient (NA_F6) register for Y/C separation	YCTNA_F6	16	H'FFFFA1C2	16
	Chroma filter TAP coefficient (NA_F7) register for Y/C separation	YCTNA_F7	16	H'FFFFA1C4	16
	Chroma filter TAP coefficient (NA_F8) register for Y/C separation	YCTNA_F8	16	H'FFFFA1C6	16
	Chroma filter TAP coefficient (NB_F0) register for Y/C separation	YCTNB_F0	16	H'FFFFA1C8	16
	Chroma filter TAP coefficient (NB_F1) register for Y/C separation	YCTNB_F1	16	H'FFFFA1CA	16
	Chroma filter TAP coefficient (NB_F2) register for Y/C separation	YCTNB_F2	16	H'FFFFA1CC	16
	Chroma filter TAP coefficient (NB_F3) register for Y/C separation	YCTNB_F3	16	H'FFFFA1CE	16
	Chroma filter TAP coefficient (NB_F4) register for Y/C separation	YCTNB_F4	16	H'FFFFA1D0	16
	Chroma filter TAP coefficient (NB_F5) register for Y/C separation	YCTNB_F5	16	H'FFFFA1D2	16
	Chroma filter TAP coefficient (NB_F6) register for Y/C separation	YCTNB_F6	16	H'FFFFA1D4	16
	Chroma filter TAP coefficient (NB_F7) register for Y/C separation	YCTNB_F7	16	H'FFFFA1D6	16
	Chroma filter TAP coefficient (NB_F8) register for Y/C separation	YCTNB_F8	16	H'FFFFA1D8	16
	Luminance (Y) signal gain control register	YGAINCR	16	H'FFFFA200	16
	Color difference (CB) signal gain control register	CBGAINCR	16	H'FFFFA202	16
	Color difference (CR) signal gain control register	CRGAINCR	16	H'FFFFA204	16
	PGA register update	PGA_UPDATE	16	H'FFFFA280	16

chanhvinh.com

Module Name	Register Name	Abbreviation	Number of Bits	Address	Access Size
Digital video decoder	PGA control register	PGACR	16	H'FFFFA282	16
	ADC control register 2	ADCCR2	16	H'FFFFA284	16
Video display controller 4	External input block register update control register	INP_UPDATE	32	H'FFFF7400	16, 32
	Input select control register	INP_SEL_CNT	32	H'FFFF7404	16, 32
	External input sync signal control register	INP_EXT_SYNC_CNT	32	H'FFFF7408	16, 32
	Vsync signal phase adjustment register	INP_VSYNC_PH_ADJ	32	H'FFFF740C	16, 32
	Sync signal delay adjustment register	INP_DLY_ADJ	32	H'FFFF7410	16, 32
	Image quality adjustment block register update control register	IMGCNT_UPDATE	32	H'FFFF7480	16, 32
	NR control register 0	IMGCNT_NR_CNT0	32	H'FFFF7484	16, 32
	NR control register 1	IMGCNT_NR_CNT1	32	H'FFFF7488	16, 32
	Image quality adjustment block matrix mode register	IMGCNT_MTX_MODE	32	H'FFFF74A0	16, 32
	Image quality adjustment block matrix YG adjustment register 0	IMGCNT_MTX_YG_ADJ0	32	H'FFFF74A4	16, 32
	Image quality adjustment block matrix YG adjustment register 1	IMGCNT_MTX_YG_ADJ1	32	H'FFFF74A8	16, 32
	Image quality adjustment block matrix CBB adjustment register 0	IMGCNT_MTX_CBB_ADJ0	32	H'FFFF74AC	16, 32
	Image quality adjustment block matrix CBB adjustment register 1	IMGCNT_MTX_CBB_ADJ1	32	H'FFFF74B0	16, 32
	Image quality adjustment block matrix CRR adjustment register 0	IMGCNT_MTX_CRR_ADJ0	32	H'FFFF74B4	16, 32
	Image quality adjustment block matrix CRR adjustment register 1	IMGCNT_MTX_CRR_ADJ1	32	H'FFFF74B8	16, 32
	SCL0 register update control register	SCL0_UPDATE	32	H'FFFF7500	16, 32
	Mask control register	SCL0_FRC1	32	H'FFFF7504	16, 32
	Missing Vsync compensation control register	SCL0_FRC2	32	H'FFFF7508	16, 32
	Output sync select register	SCL0_FRC3	32	H'FFFF750C	16, 32
	Free-running period control register	SCL0_FRC4	32	H'FFFF7510	16, 32
	Output delay control register	SCL0_FRC5	32	H'FFFF7514	16, 32

chanhvinh.com

Module Name	Register Name	Abbreviation	Number of Bits	Address	Access Size
Video display controller 4	Full-screen vertical size register	SCL0_FRC6	32	H'FFFF7518	16, 32
	Full-screen horizontal size register	SCL0_FRC7	32	H'FFFF751C	16, 32
	Vsync detection register	SCL0_FRC9	32	H'FFFF7524	16, 32
	Scaling-down control register	SCL0_DS1	32	H'FFFF752C	16, 32
	Vertical capture size register	SCL0_DS2	32	H'FFFF7530	16, 32
	Horizontal capture size register	SCL0_DS3	32	H'FFFF7534	16, 32
	Horizontal scale down register	SCL0_DS4	32	H'FFFF7538	16, 32
	Initial vertical phase register	SCL0_DS5	32	H'FFFF753C	16, 32
	Vertical scaling register	SCL0_DS6	32	H'FFFF7540	16, 32
	Scaling-down control block output size register	SCL0_DS7	32	H'FFFF7544	16, 32
	Scaling-up control register	SCL0_US1	32	H'FFFF7548	16, 32
	Output image vertical size register	SCL0_US2	32	H'FFFF754C	16, 32
	Output image horizontal size register	SCL0_US3	32	H'FFFF7550	16, 32
	Scaling-up control block input size register	SCL0_US4	32	H'FFFF7554	16, 32
	Horizontal scale up register	SCL0_US5	32	H'FFFF7558	16, 32
	Horizontal scale up initial phase register	SCL0_US6	32	H'FFFF755C	16, 32
	Trimming register	SCL0_US7	32	H'FFFF7560	16, 32
	Frame buffer read select register	SCL0_US8	32	H'FFFF7564	16, 32
	Background color register	SCL0_OVR1	32	H'FFFF756C	16, 32
	SCL1 register update control register	SCL1_UPDATE	32	H'FFFF7580	16, 32
	Writing mode register	SCL1_WR1	32	H'FFFF7588	16, 32
	Write address register 1	SCL1_WR2	32	H'FFFF758C	16, 32
	Write address register 2	SCL1_WR3	32	H'FFFF7590	16, 32
	Write address register 3	SCL1_WR4	32	H'FFFF7594	16, 32
	Frame sub-sampling register	SCL1_WR5	32	H'FFFF759C	16, 32
	Bit reduction register	SCL1_WR6	32	H'FFFF75A0	16, 32
	Write detection register	SCL1_WR7	32	H'FFFF75A4	16, 32
	Graphics 1 register update control register	GR1_UPDATE	32	H'FFFF7600	16, 32
	Frame buffer read control register (Graphics 1)	GR1_FLM_RD	32	H'FFFF7604	16, 32

chanhvinh.com

Module Name	Register Name	Abbreviation	Number of Bits	Address	Access Size
Video display controller 4	Frame buffer control register 1 (Graphics 1)	GR1_FLM1	32	H'FFFF7608	16, 32
	Frame buffer control register 2 (Graphics 1)	GR1_FLM2	32	H'FFFF760C	16, 32
	Frame buffer control register 3 (Graphics 1)	GR1_FLM3	32	H'FFFF7610	16, 32
	Frame buffer control register 4 (Graphics 1)	GR1_FLM4	32	H'FFFF7614	16, 32
	Frame buffer control register 5 (Graphics 1)	GR1_FLM5	32	H'FFFF7618	16, 32
	Frame buffer control register 6 (Graphics 1)	GR1_FLM6	32	H'FFFF761C	16, 32
	Alpha blending control register 1 (Graphics 1)	GR1_AB1	32	H'FFFF7620	16, 32
	Alpha blending control register 2 (Graphics 1)	GR1_AB2	32	H'FFFF7624	16, 32
	Alpha blending control register 3 (Graphics 1)	GR1_AB3	32	H'FFFF7628	16, 32
	Alpha blending control register 7 (Graphics 1)	GR1_AB7	32	H'FFFF7638	16, 32
	Alpha blending control register 8 (Graphics 1)	GR1_AB8	32	H'FFFF763C	16, 32
	Alpha blending control register 9 (Graphics 1)	GR1_AB9	32	H'FFFF7640	16, 32
	Alpha blending control register 10 (Graphics 1)	GR1_AB10	32	H'FFFF7644	16, 32
	Alpha blending control register 11 (Graphics 1)	GR1_AB11	32	H'FFFF7648	16, 32
	Background color control register (Graphics 1)	GR1_BASE	32	H'FFFF764C	16, 32
	CLUT table control register (Graphics 1)	GR1_CLUT	32	H'FFFF7650	16, 32
	Register update control register in image quality improver	ADJ_UPDATE	32	H'FFFF7680	16, 32
	Black stretch register	ADJ_BKSTR_SET	32	H'FFFF7684	16, 32
	Enhancer timing adjustment register 1	ADJ_ENH_TIM1	32	H'FFFF7688	16, 32
	Enhancer timing adjustment register 2	ADJ_ENH_TIM2	32	H'FFFF768C	16, 32

chanhvinh.com

Module Name	Register Name	Abbreviation	Number of Bits	Address	Access Size
Video display controller 4	Enhancer timing adjustment register 3	ADJ_ENH_TIM3	32	H'FFFF7690	16, 32
	Enhancer sharpness register 1	ADJ_ENH_SHP1	32	H'FFFF7694	16, 32
	Enhancer sharpness register 2	ADJ_ENH_SHP2	32	H'FFFF7698	16, 32
	Enhancer sharpness register 3	ADJ_ENH_SHP3	32	H'FFFF769C	16, 32
	Enhancer sharpness register 4	ADJ_ENH_SHP4	32	H'FFFF76A0	16, 32
	Enhancer sharpness register 5	ADJ_ENH_SHP5	32	H'FFFF76A4	16, 32
	Enhancer sharpness register 6	ADJ_ENH_SHP6	32	H'FFFF76A8	16, 32
	Enhancer LTI register 1	ADJ_ENH_LTI1	32	H'FFFF76AC	16, 32
	Enhancer LTI register 2	ADJ_ENH_LTI2	32	H'FFFF76B0	16, 32
	Matrix mode register in image quality improver	ADJ_MTX_MODE	32	H'FFFF76B4	16, 32
	Matrix YG control register 0 in image quality improver	ADJ_MTX_YG_ADJ0	32	H'FFFF76B8	16, 32
	Matrix YG control register 1 in image quality improver	ADJ_MTX_YG_ADJ1	32	H'FFFF76BC	16, 32
	Matrix CBB control register 0 in image quality improver	ADJ_MTX_CBB_ADJ0	32	H'FFFF76C0	16, 32
	Matrix CBB control register 1 in image quality improver	ADJ_MTX_CBB_ADJ1	32	H'FFFF76C4	16, 32
	Matrix CRR control register 0 in image quality improver	ADJ_MTX_CRR_ADJ0	32	H'FFFF76C8	16, 32
	Matrix CRR control register 1 in image quality improver	ADJ_MTX_CRR_ADJ1	32	H'FFFF76CC	16, 32
	Graphics 2 register update control register	GR2_UPDATE	32	H'FFFF7700	16, 32
	Frame buffer read control register (Graphics 2)	GR2_FLM_RD	32	H'FFFF7704	16, 32
	Frame buffer control register 1 (Graphics 2)	GR2_FLM1	32	H'FFFF7708	16, 32
	Frame buffer control register 2 (Graphics 2)	GR2_FLM2	32	H'FFFF770C	16, 32
	Frame buffer control register 3 (Graphics 2)	GR2_FLM3	32	H'FFFF7710	16, 32
	Frame buffer control register 4 (Graphics 2)	GR2_FLM4	32	H'FFFF7714	16, 32

chanhvinh.com

Module Name	Register Name	Abbreviation	Number of Bits	Address	Access Size
Video display controller 4	Frame buffer control register 5 (Graphics 2)	GR2_FLM5	32	H'FFFF7718	16, 32
	Frame buffer control register 6 (Graphics 2)	GR2_FLM6	32	H'FFFF771C	16, 32
	Alpha blending control register 1 (Graphics 2)	GR2_AB1	32	H'FFFF7720	16, 32
	Alpha blending control register 2 (Graphics 2)	GR2_AB2	32	H'FFFF7724	16, 32
	Alpha blending control register 3 (Graphics 2)	GR2_AB3	32	H'FFFF7728	16, 32
	Alpha blending control register 4 (Graphics 2)	GR2_AB4	32	H'FFFF772C	16, 32
	Alpha blending control register 5 (Graphics 2)	GR2_AB5	32	H'FFFF7730	16, 32
	Alpha blending control register 6 (Graphics 2)	GR2_AB6	32	H'FFFF7734	16, 32
	Alpha blending control register 7 (Graphics 2)	GR2_AB7	32	H'FFFF7738	16, 32
	Alpha blending control register 8 (Graphics 2)	GR2_AB8	32	H'FFFF773C	16, 32
	Alpha blending control register 9 (Graphics 2)	GR2_AB9	32	H'FFFF7740	16, 32
	Alpha blending control register 10 (Graphics 2)	GR2_AB10	32	H'FFFF7744	16, 32
	Alpha blending control register 11 (Graphics 2)	GR2_AB11	32	H'FFFF7748	16, 32
	Background color control register (Graphics 2)	GR2_BASE	32	H'FFFF774C	16, 32
	CLUT table control register (Graphics 2)	GR2_CLUT	32	H'FFFF7750	16, 32
	Status monitor register (Graphics 2)	GR2_MON	32	H'FFFF7754	16, 32
	Graphics 3 register update control register	GR3_UPDATE	32	H'FFFF7780	16, 32
	Frame buffer read control register (Graphics 3)	GR3_FLM_RD	32	H'FFFF7784	16, 32
	Frame buffer control register 1 (Graphics 3)	GR3_FLM1	32	H'FFFF7788	16, 32

chanhvinh.com

Module Name	Register Name	Abbreviation	Number of Bits	Address	Access Size
Video display controller 4	Frame buffer control register 2 (Graphics 3)	GR3_FLM2	32	H'FFFF778C	16, 32
	Frame buffer control register 3 (Graphics 3)	GR3_FLM3	32	H'FFFF7790	16, 32
	Frame buffer control register 4 (Graphics 3)	GR3_FLM4	32	H'FFFF7794	16, 32
	Frame buffer control register 5 (Graphics 3)	GR3_FLM5	32	H'FFFF7798	16, 32
	Frame buffer control register 6 (Graphics 3)	GR3_FLM6	32	H'FFFF779C	16, 32
	Alpha blending control register 1 (Graphics 3)	GR3_AB1	32	H'FFFF77A0	16, 32
	Alpha blending control register 2 (Graphics 3)	GR3_AB2	32	H'FFFF77A4	16, 32
	Alpha blending control register 3 (Graphics 3)	GR3_AB3	32	H'FFFF77A8	16, 32
	Alpha blending control register 4 (Graphics 3)	GR3_AB4	32	H'FFFF77AC	16, 32
	Alpha blending control register 5 (Graphics 3)	GR3_AB5	32	H'FFFF77B0	16, 32
	Alpha blending control register 6 (Graphics 3)	GR3_AB6	32	H'FFFF77B4	16, 32
	Alpha blending control register 7 (Graphics 3)	GR3_AB7	32	H'FFFF77B8	16, 32
	Alpha blending control register 8 (Graphics 3)	GR3_AB8	32	H'FFFF77BC	16, 32
	Alpha blending control register 9 (Graphics 3)	GR3_AB9	32	H'FFFF77C0	16, 32
	Alpha blending control register 10 (Graphics 3)	GR3_AB10	32	H'FFFF77C4	16, 32
	Alpha blending control register 11 (Graphics 3)	GR3_AB11	32	H'FFFF77C8	16, 32
	Background color control register (Graphics 3)	GR3_BASE	32	H'FFFF77CC	16, 32
	CLUT table and interrupt control register (Graphics 3)	GR3_CLUT_INT	32	H'FFFF77D0	16, 32
	Status monitor register (Graphics 3)	GR3_MON	32	H'FFFF77D4	16, 32

chanhvinh.com

Module Name	Register Name	Abbreviation	Number of Bits	Address	Access Size
Video display controller 4	Register update control register G in gamma correction block	GAM_G_UPDATE	32	H'FFFF7800	16, 32
	Function switch register in gamma correction block	GAM_SW	32	H'FFFF7804	16, 32
	Table setting register G1 in gamma correction block	GAM_G_LUT1	32	H'FFFF7808	16, 32
	Table setting register G2 in gamma correction block	GAM_G_LUT2	32	H'FFFF780C	16, 32
	Table setting register G3 in gamma correction block	GAM_G_LUT3	32	H'FFFF7810	16, 32
	Table setting register G4 in gamma correction block	GAM_G_LUT4	32	H'FFFF7814	16, 32
	Table setting register G5 in gamma correction block	GAM_G_LUT5	32	H'FFFF7818	16, 32
	Table setting register G6 in gamma correction block	GAM_G_LUT6	32	H'FFFF781C	16, 32
	Table setting register G7 in gamma correction block	GAM_G_LUT7	32	H'FFFF7820	16, 32
	Table setting register G8 in gamma correction block	GAM_G_LUT8	32	H'FFFF7824	16, 32
	Table setting register G9 in gamma correction block	GAM_G_LUT9	32	H'FFFF7828	16, 32
	Table setting register G10 in gamma correction block	GAM_G_LUT10	32	H'FFFF782C	16, 32
	Table setting register G11 in gamma correction block	GAM_G_LUT11	32	H'FFFF7830	16, 32
	Table setting register G12 in gamma correction block	GAM_G_LUT12	32	H'FFFF7834	16, 32
	Table setting register G13 in gamma correction block	GAM_G_LUT13	32	H'FFFF7838	16, 32
	Table setting register G14 in gamma correction block	GAM_G_LUT14	32	H'FFFF783C	16, 32
	Table setting register G15 in gamma correction block	GAM_G_LUT15	32	H'FFFF7840	16, 32
	Table setting register G16 in gamma correction block	GAM_G_LUT16	32	H'FFFF7844	16, 32

chanhvinh.com

Module Name	Register Name	Abbreviation	Number of Bits	Address	Access Size
Video display controller 4	Area setting register G1 in gamma correction block	GAM_G_AREA1	32	H'FFFF7848	16, 32
	Area setting register G2 in gamma correction block	GAM_G_AREA2	32	H'FFFF784C	16, 32
	Area setting register G3 in gamma correction block	GAM_G_AREA3	32	H'FFFF7850	16, 32
	Area setting register G4 in gamma correction block	GAM_G_AREA4	32	H'FFFF7854	16, 32
	Area setting register G5 in gamma correction block	GAM_G_AREA5	32	H'FFFF7858	16, 32
	Area setting register G6 in gamma correction block	GAM_G_AREA6	32	H'FFFF785C	16, 32
	Area setting register G7 in gamma correction block	GAM_G_AREA7	32	H'FFFF7860	16, 32
	Area setting register G8 in gamma correction block	GAM_G_AREA8	32	H'FFFF7864	16, 32
	Register update control register B in gamma correction block	GAM_B_UPDATE	32	H'FFFF7880	16, 32
	Table setting register B1 in gamma correction block	GAM_B_LUT1	32	H'FFFF7888	16, 32
	Table setting register B2 in gamma correction block	GAM_B_LUT2	32	H'FFFF788C	16, 32
	Table setting register B3 in gamma correction block	GAM_B_LUT3	32	H'FFFF7890	16, 32
	Table setting register B4 in gamma correction block	GAM_B_LUT4	32	H'FFFF7894	16, 32
	Table setting register B5 in gamma correction block	GAM_B_LUT5	32	H'FFFF7898	16, 32
	Table setting register B6 in gamma correction block	GAM_B_LUT6	32	H'FFFF789C	16, 32
	Table setting register B7 in gamma correction block	GAM_B_LUT7	32	H'FFFF78A0	16, 32
	Table setting register B8 in gamma correction block	GAM_B_LUT8	32	H'FFFF78A4	16, 32
	Table setting register B9 in gamma correction block	GAM_B_LUT9	32	H'FFFF78A8	16, 32

chanhvinh.com

Module Name	Register Name	Abbreviation	Number of Bits	Address	Access Size
Video display controller 4	Table setting register B10 in gamma correction block	GAM_B_LUT10	32	H'FFFF78AC	16, 32
	Table setting register B11 in gamma correction block	GAM_B_LUT11	32	H'FFFF78B0	16, 32
	Table setting register B12 in gamma correction block	GAM_B_LUT12	32	H'FFFF78B4	16, 32
	Table setting register B13 in gamma correction block	GAM_B_LUT13	32	H'FFFF78B8	16, 32
	Table setting register B14 in gamma correction block	GAM_B_LUT14	32	H'FFFF78BC	16, 32
	Table setting register B15 in gamma correction block	GAM_B_LUT15	32	H'FFFF78C0	16, 32
	Table setting register B16 in gamma correction block	GAM_B_LUT16	32	H'FFFF78C4	16, 32
	Area setting register B1 in gamma correction block	GAM_B_AREA1	32	H'FFFF78C8	16, 32
	Area setting register B2 in gamma correction block	GAM_B_AREA2	32	H'FFFF78CC	16, 32
	Area setting register B3 in gamma correction block	GAM_B_AREA3	32	H'FFFF78D0	16, 32
	Area setting register B4 in gamma correction block	GAM_B_AREA4	32	H'FFFF78D4	16, 32
	Area setting register B5 in gamma correction block	GAM_B_AREA5	32	H'FFFF78D8	16, 32
	Area setting register B6 in gamma correction block	GAM_B_AREA6	32	H'FFFF78DC	16, 32
	Area setting register B7 in gamma correction block	GAM_B_AREA7	32	H'FFFF78E0	16, 32
	Area setting register B8 in gamma correction block	GAM_B_AREA8	32	H'FFFF78E4	16, 32
	Register update control register R in gamma correction block	GAM_R_UPDATE	32	H'FFFF7900	16, 32
	Table setting register R1 in gamma correction block	GAM_R_LUT1	32	H'FFFF7908	16, 32
	Table setting register R2 in gamma correction block	GAM_R_LUT2	32	H'FFFF790C	16, 32

chanhvinh.com

Module Name	Register Name	Abbreviation	Number of Bits	Address	Access Size
Video display controller 4	Table setting register R3 in gamma correction block	GAM_R_LUT3	32	H'FFFF7910	16, 32
	Table setting register R4 in gamma correction block	GAM_R_LUT4	32	H'FFFF7914	16, 32
	Table setting register R5 in gamma correction block	GAM_R_LUT5	32	H'FFFF7918	16, 32
	Table setting register R6 in gamma correction block	GAM_R_LUT6	32	H'FFFF791C	16, 32
	Table setting register R7 in gamma correction block	GAM_R_LUT7	32	H'FFFF7920	16, 32
	Table setting register R8 in gamma correction block	GAM_R_LUT8	32	H'FFFF7924	16, 32
	Table setting register R9 in gamma correction block	GAM_R_LUT9	32	H'FFFF7928	16, 32
	Table setting register R10 in gamma correction block	GAM_R_LUT10	32	H'FFFF792C	16, 32
	Table setting register R11 in gamma correction block	GAM_R_LUT11	32	H'FFFF7930	16, 32
	Table setting register R12 in gamma correction block	GAM_R_LUT12	32	H'FFFF7934	16, 32
	Table setting register R13 in gamma correction block	GAM_R_LUT13	32	H'FFFF7938	16, 32
	Table setting register R14 in gamma correction block	GAM_R_LUT14	32	H'FFFF793C	16, 32
	Table setting register R15 in gamma correction block	GAM_R_LUT15	32	H'FFFF7940	16, 32
	Table setting register R16 in gamma correction block	GAM_R_LUT16	32	H'FFFF7944	16, 32
	Area setting register R1 in gamma correction block	GAM_R_AREA1	32	H'FFFF7948	16, 32
	Area setting register R2 in gamma correction block	GAM_R_AREA2	32	H'FFFF794C	16, 32
	Area setting register R3 in gamma correction block	GAM_R_AREA3	32	H'FFFF7950	16, 32
	Area setting register R4 in gamma correction block	GAM_R_AREA4	32	H'FFFF7954	16, 32

chanhvinh.com

Module Name	Register Name	Abbreviation	Number of Bits	Address	Access Size
Video display controller 4	Area setting register R5 in gamma correction block	GAM_R_AREA5	32	H'FFFF7958	16, 32
	Area setting register R6 in gamma correction block	GAM_R_AREA6	32	H'FFFF795C	16, 32
	Area setting register R7 in gamma correction block	GAM_R_AREA7	32	H'FFFF7960	16, 32
	Area setting register R8 in gamma correction block	GAM_R_AREA8	32	H'FFFF7964	16, 32
	TCON register update control register	TCON_UPDATE	32	H'FFFF7980	16, 32
	TCON reference timing setting register	TCON_TIM	32	H'FFFF7984	16, 32
	TCON vertical timing setting register A1	TCON_TIM_STVA1	32	H'FFFF7988	16, 32
	TCON vertical timing setting register A2	TCON_TIM_STVA2	32	H'FFFF798C	16, 32
	TCON vertical timing setting register B1	TCON_TIM_STVB1	32	H'FFFF7990	16, 32
	TCON vertical timing setting register B2	TCON_TIM_STVB2	32	H'FFFF7994	16, 32
	TCON horizontal timing setting register STH1	TCON_TIM_STH1	32	H'FFFF7998	16, 32
	TCON horizontal timing setting register STH2	TCON_TIM_STH2	32	H'FFFF799C	16, 32
	TCON horizontal timing setting register STB1	TCON_TIM_STB1	32	H'FFFF79A0	16, 32
	TCON horizontal timing setting register STB2	TCON_TIM_STB2	32	H'FFFF79A4	16, 32
	TCON horizontal timing setting register CPV1	TCON_TIM_CPV1	32	H'FFFF79A8	16, 32
	TCON horizontal timing setting register CPV2	TCON_TIM_CPV2	32	H'FFFF79AC	16, 32
	TCON horizontal timing setting register POLA1	TCON_TIM_POLA1	32	H'FFFF79B0	16, 32
	TCON horizontal timing setting register POLA2	TCON_TIM_POLA2	32	H'FFFF79B4	16, 32
	TCON horizontal timing setting register POLB1	TCON_TIM_POLB1	32	H'FFFF79B8	16, 32
	TCON horizontal timing setting register POLB2	TCON_TIM_POLB2	32	H'FFFF79BC	16, 32
	TCON data enable polarity setting register	TCON_TIM_DE	32	H'FFFF79C0	16, 32

chanhvinh.com

Module Name	Register Name	Abbreviation	Number of Bits	Address	Access Size
Video display controller 4	Register update control register in output controller	OUT_UPDATE	32	H'FFFF7A00	16, 32
	Output interface register	OUT_SET	32	H'FFFF7A04	16, 32
	Brightness (DC) correction register 1	OUT_BRIGHT1	32	H'FFFF7A08	16, 32
	Brightness (DC) correction register 2	OUT_BRIGHT2	32	H'FFFF7A0C	16, 32
	Contrast (gain) correction register	OUT_CONTRAST	32	H'FFFF7A10	16, 32
	Panel dither register	OUT_PDTHA	32	H'FFFF7A14	16, 32
	Output phase control register	OUT_CLK_PHASE	32	H'FFFF7A24	16, 32
	Interrupt control register 1	SYSCNT_INT1	32	H'FFFF7A80	16, 32
	Interrupt control register 2	SYSCNT_INT2	32	H'FFFF7A84	16, 32
	Interrupt control register 3	SYSCNT_INT3	32	H'FFFF7A88	16, 32
	Interrupt control register 4	SYSCNT_INT4	32	H'FFFF7A8C	16, 32
	Panel clock control register	SYSCNT_PANEL_CLK	16	H'FFFF7A90	16
	CLUT table read select signal status register	SYSCNT_CLUT	16	H'FFFF7A92	16
Image renderer	Control register	CR	32	H'FFFF3008	32
	Status register	SR	32	H'FFFF300C	32
	Status clear register	SRCR	32	H'FFFF3010	32
	Interrupt control register	ICR	32	H'FFFF3014	32
	Interrupt mask register	IMR	32	H'FFFF3018	32
	DL status register	DLPR	32	H'FFFF3020	32
	DL start address register	DLSAR	32	H'FFFF3030	32
	Destination start address register	DSAR	32	H'FFFF3034	32
	Destination stride register	DSTR	32	H'FFFF303C	32
	Destination start address register 2	DSAR2	32	H'FFFF3048	32
	DL start address register 2	DLSAR2	32	H'FFFF304C	32
	Triangle mode register	TRIMR	32	H'FFFF3060	32
	Triangle set register	TRIMSR	32	H'FFFF3064	32
	Triangle clear register	TRIMCR	32	H'FFFF3068	32
	Triangle color register	TRICR	32	H'FFFF306C	32
	Source and destination coordinate decimal point register	UVDPOR	32	H'FFFF3070	32

chanhvinh.com

Module Name	Register Name	Abbreviation	Number of Bits	Address	Access Size
Image renderer	Source width register	SUSR	32	H'FFFF3074	32
	Source height register	SVSR	32	H'FFFF3078	32
	MIN clipping X register	XMINR	32	H'FFFF3080	32
	MIN clipping Y register	YMINR	32	H'FFFF3084	32
	MAX clipping X register	XMAXR	32	H'FFFF3088	32
	MAX clipping Y register	YMAXR	32	H'FFFF308C	32
	Mesh generation X size register	AMXSR	32	H'FFFF3090	32
	Mesh generation Y size register	AMYSR	32	H'FFFF3094	32
	Mesh generation X start register	AMXOR	32	H'FFFF3098	32
	Mesh generation Y start register	AMYOR	32	H'FFFF309C	32
	Memory access control register 1	MACR1	32	H'FFFF30A0	32
	Start line specification register	LSPR	32	H'FFFF3A00	32
	End line specification register	LEPR	32	H'FFFF3A04	32
	Mesh size register	LMSR	32	H'FFFF3A08	32
Display out comparison unit	Control register	DOCMCR	32	H'FFFFA800	32
	Status register	DOCMSTR	32	H'FFFFA804	32
	Status clear register	DOCMCLSTR	32	H'FFFFA808	32
	Interrupt enable register	DOCMIENR	32	H'FFFFA80C	32
	Operation parameter setting register	DOCMPMR	32	H'FFFFA814	32
	Expected CRC code register	DOCMECRCR	32	H'FFFFA818	32
	Calculated CRC code value register	DOCMCCRCR	32	H'FFFFA81C	32
	Horizontal start position setting register	DOCMSPXR	32	H'FFFFA820	32
	Vertical start position setting register	DOCMSPYR	32	H'FFFFA824	32
	Horizontal size setting register	DOCMSZXR	32	H'FFFFA828	32
	Vertical size setting register	DOCMSZYR	32	H'FFFFA82C	32
	CRC code initialization register	DOCMCRCIR	32	H'FFFFA830	32
JPEG codec unit	JPEG code mode register	JCMOD	8	H'E8017000	8
	JPEG code command register	JCCMD	8	H'E8017001	8
	JPEG code quantization table number register	JCQTN	8	H'E8017003	8
	JPEG code Huffman table number register	JCHTN	8	H'E8017004	8

chanhvinh.com

Module Name	Register Name	Abbreviation	Number of Bits	Address	Access Size
JPEG codec unit	JPEG code DRI upper register	JCDRIU	8	H'E8017005	8
	JPEG code DRI lower register	JCDRID	8	H'E8017006	8
	JPEG code vertical size upper register	JCVSZU	8	H'E8017007	8
	JPEG code vertical size lower register	JCVSZD	8	H'E8017008	8
	JPEG code horizontal size upper register	JCHSZU	8	H'E8017009	8
	JPEG code horizontal size lower register	JCHSZD	8	H'E801700A	8
	JPEG code data count upper register	JCDTCU	8	H'E801700B	8
	JPEG code data count middle register	JCDTCM	8	H'E801700C	8
	JPEG code data count lower register	JCDTCD	8	H'E801700D	8
	JPEG interrupt enable register 0	JINTE0	8	H'E801700E	8
	JPEG interrupt status register 0	JINTS0	8	H'E801700F	8
	JPEG code decode error register	JCDERR	8	H'E8017010	8
	JPEG code reset register	JCRST	8	H'E8017011	8
	JPEG interface compression control register	JIFECNT	32	H'E8017040	32
	JPEG interface compression source address register	JIFESA	32	H'E8017044	32
	JPEG interface compression line offset register	JIFESOFST	32	H'E8017048	32
	JPEG interface compression destination address register	JIFEDA	32	H'E801704C	32
	JPEG interface compression source line count register	JIFESLC	32	H'E8017050	32
	JPEG interface decompression control register	JIFDCNT	32	H'E8017058	32
	JPEG interface decompression source address register	JIFDSA	32	H'E801705C	32
	JPEG interface decompression destination offset register	JIFDDOFST	32	H'E8017060	32
	JPEG interface decompression destination address register	JIFDDA	32	H'E8017064	32
	JPEG interface decompression source count register	JIFDSDC	32	H'E8017068	32

chanhvinh.com

Module Name	Register Name	Abbreviation	Number of Bits	Address	Access Size
JPEG codec unit	JPEG interface decompression destination line count register	JIFDDLC	32	H'E801706C	32
	JPEG interface decompression α setting register	JIFDADT	32	H'E8017070	32
	JPEG interrupt enable register 1	JINTE1	32	H'E801708C	32
	JPEG interrupt status register 1	JINTS1	32	H'E8017090	32
	JPEG code quantization table 0 register	JCQTBL0	512	H'E8017100 to H'E801713F	8
	JPEG code quantization table 1 register	JCQTBL1	512	H'E8017140 to H'E801717F	8
	JPEG code quantization table 2 register	JCQTBL2	512	H'E8017180 to H'E80171BF	8
	JPEG code quantization table 3 register	JCQTBL3	512	H'E80171C0 to H'E80171FF	8
	JPEG code Huffman table DC0 register	JCHTBD0	224	H'E8017200 to H'E801721B	8
	JPEG code Huffman table AC0 register	JCHTBA0	1416	H'E8017220 to H'E80172D1	8
	JPEG code Huffman table DC1 register	JCHTBD1	224	H'E8017300 to H'E801731B	8
	JPEG code Huffman table AC1 register	JCHTBA1	1416	H'E8017320 to H'E80173D1	8
Sampling rate converter	Input data register_0	SRCID_0	32	H'FFFE7000	16, 32
	Output data register_0	SRCOD_0	32	H'FFFE7004	16, 32
	Input data control register_0	SRCIDCTRL_0	16	H'FFFE7008	16
	Output data control register_0	SRCODCTRL_0	16	H'FFFE700A	16
	Control register_0	SRCCTRL_0	16	H'FFFE700C	16
	Status register_0	SRCSTAT_0	16	H'FFFE700E	16

chanhvinh.com

Module Name	Register Name	Abbreviation	Number of Bits	Address	Access Size
Sampling rate converter	Input data register_1	SRCID_1	32	H'FFFE7800	16, 32
	Output data register_1	SRCOD_1	32	H'FFFE7804	16, 32
	Input data control register_1	SRCIDCTRL_1	16	H'FFFE7808	16
	Output data control register_1	SRCODCTRL_1	16	H'FFFE780A	16
	Control register_1	SRCCTRL_1	16	H'FFFE780C	16
	Status register_1	SRCSTAT_1	16	H'FFFE780E	16
	Input data register_2	SRCID_2	32	H'FFFE8000	16, 32
	Output data register_2	SRCOD_2	32	H'FFFE8004	16, 32
	Input data control register_2	SRCIDCTRL_2	16	H'FFFE8008	16
	Output data control register_2	SRCODCTRL_2	16	H'FFFE800A	16
	Control register_2	SRCCTRL_2	16	H'FFFE800C	16
	Status register_2	SRCSTAT_2	16	H'FFFE800E	16
Sound generator	Sound generator control register 1_0	SGCR1_0	8	H'FFFEC800	8, 16
	Sound generator control status register_0	SGCSR_0	8	H'FFFEC801	8, 16
	Sound generator control register 2_0	SGCR2_0	8	H'FFFEC802	8, 16
	Sound generator loudness register_0	SGLR_0	8	H'FFFEC803	8, 16
	Sound generator tone frequency register_0	SGTFR_0	8	H'FFFEC804	8, 16
	Sound generator reference frequency register_0	SGSFR_0	8	H'FFFEC805	8, 16
	Sound generator control register 1_1	SGCR1_1	8	H'FFFECA00	8, 16
	Sound generator control status register_1	SGCSR_1	8	H'FFFECA01	8, 16
	Sound generator control register 2_1	SGCR2_1	8	H'FFFECA02	8, 16
	Sound generator loudness register_1	SGLR_1	8	H'FFFECA03	8, 16
	Sound generator tone frequency register_1	SGTFR_1	8	H'FFFECA04	8, 16
	Sound generator reference frequency register_1	SGSFR_1	8	H'FFFECA05	8, 16
	Sound generator control register 1_2	SGCR1_2	8	H'FFFECC00	8, 16
	Sound generator control status register_2	SGCSR_2	8	H'FFFECC01	8, 16
	Sound generator control register 2_2	SGCR2_2	8	H'FFFECC02	8, 16

chanhvinh.com

Module Name	Register Name	Abbreviation	Number of Bits	Address	Access Size
Sound generator	Sound generator loudness register_2	SGLR_2	8	H'FFFECC03	8, 16
	Sound generator tone frequency register_2	SGTFR_2	8	H'FFFECC04	8, 16
	Sound generator reference frequency register_2	SGSFR_2	8	H'FFFECC05	8, 16
	Sound generator control register 1_3	SGCR1_3	8	H'FFFECE00	8, 16
	Sound generator control status register_3	SGCSR_3	8	H'FFFECE01	8, 16
	Sound generator control register 2_3	SGCR2_3	8	H'FFFECE02	8, 16
	Sound generator loudness register_3	SGLR_3	8	H'FFFECE03	8, 16
	Sound generator tone frequency register_3	SGTFR_3	8	H'FFFECE04	8, 16
	Sound generator reference frequency register_3	SGSFR_3	8	H'FFFECE05	8, 16
MMC host interface	Command setting register	CE_CMD_SET	32	H'E8030800	16, 32
	Argument register	CE_ARG	32	H'E8030808	16, 32
	Argument register for automatically-issued CMD12	CE_ARG_CMD12	32	H'E803080C	16, 32
	Command control register	CE_CMD_CTRL	32	H'E8030810	16, 32
	Transfer block setting register	CE_BLOCK_SET	32	H'E8030814	16, 32
	Clock control register	CE_CLK_CTRL	32	H'E8030818	16, 32
	Buffer access configuration register	CE_BUF_ACC	32	H'E803081C	16, 32
	Response register 3	CE_RESP3	32	H'E8030820	16, 32
	Response register 2	CE_RESP2	32	H'E8030824	16, 32
	Response register 1	CE_RESP1	32	H'E8030828	16, 32
	Response register 0	CE_RESP0	32	H'E803082C	16, 32
	Response register for automatically-issued CMD12	CE_RESP_CMD12	32	H'E8030830	16, 32
	Data register	CE_DATA	32	H'E8030834	16, 32
	Interrupt flag register	CE_INT	32	H'E8030840	16, 32
	Interrupt enable register	CE_INT_EN	32	H'E8030844	16, 32
	Status register 1	CE_HOST_STS1	32	H'E8030848	16, 32
	Status register 2	CE_HOST_STS2	32	H'E803084C	16, 32
	DMA mode setting register	CE_DMA_MODE	32	H'E803085C	16, 32

chanhvinh.com

Module Name	Register Name	Abbreviation	Number of Bits	Address	Access Size
MMC host interface	Card detection/port control register	CE_DETECT	32	H'E8030870	16, 32
	Special mode setting register	CE_ADD_MODE	32	H'E8030874	16, 32
	Version register	CE_VERSION	32	H'E803087C	16, 32
Motor control PWM timer	PWM control register_1	PWCR_1	8	H'FFFEF4E0	8, 16
	PWM polarity register_1	PWPR_1	8	H'FFFEF4E4	8, 16
	PWM cycle register_1	PWCYR_1	16	H'FFFEF4E6	16
	PWM buffer register_1A	PWBFR_1A	16	H'FFFEF4E8	16
	PWM buffer register_1C	PWBFR_1C	16	H'FFFEF4EA	16
	PWM buffer register_1E	PWBFR_1E	16	H'FFFEF4EC	16
	PWM buffer register_1G	PWBFR_1G	16	H'FFFEF4EE	16
	PWM control register_2	PWCR_2	8	H'FFFEF4F0	8, 16
	PWM polarity register_2	PWPR_2	8	H'FFFEF4F4	8, 16
	PWM cycle register_2	PWCYR_2	16	H'FFFEF4F6	16
	PWM buffer register_2A	PWBFR_2A	16	H'FFFEF4F8	16
	PWM buffer register_2C	PWBFR_2C	16	H'FFFEF4FA	16
	PWM buffer register_2E	PWBFR_2E	16	H'FFFEF4FC	16
	PWM buffer register_2G	PWBFR_2G	16	H'FFFEF4FE	16
	PWM buffer transfer control register	PWBTCR	8	H'FFFEF406	8, 16
General purpose I/O ports	Port A I/O register 0	PAIOR0	16	H'FFFE3812	8, 16*
	Port A data register 0	PADR0	16	H'FFFE3816	8, 16*
	Port A port register 0	PAPR0	16	H'FFFE381A	8, 16
	Port B control register 5	PBCR5	16	H'FFFE3824	8, 16, 32
	Port B control register 4	PBCR4	16	H'FFFE3826	8, 16
	Port B control register 3	PBCR3	16	H'FFFE3828	8, 16, 32
	Port B control register 2	PBCR2	16	H'FFFE382A	8, 16
	Port B control register 1	PBCR1	16	H'FFFE382C	8, 16, 32
	Port B control register 0	PBCR0	16	H'FFFE382E	8, 16
	Port B I/O register 1	PBIOR1	16	H'FFFE3830	8, 16, 32
	Port B I/O register 0	PBIOR0	16	H'FFFE3832	8, 16
	Port B data register 1	PBDR1	16	H'FFFE3834	8, 16, 32
	Port B data register 0	PBDR0	16	H'FFFE3836	8, 16
	Port B port register 1	PBPR1	16	H'FFFE3838	8, 16, 32

chanhvinh.com

Module Name	Register Name	Abbreviation	Number of Bits	Address	Access Size
General purpose I/O ports	Port B port register 0	PBPR0	16	H'FFFE383A	8, 16
	Port C control register 2	PCCR2	16	H'FFFE384A	8, 16
	Port C control register 1	PCCR1	16	H'FFFE384C	8, 16, 32
	Port C control register 0	PCCR0	16	H'FFFE384E	8, 16
	Port C I/O register 0	PCIOR0	16	H'FFFE3852	8, 16
	Port C data register 0	PCDR0	16	H'FFFE3856	8, 16
	Port C port register 0	PCPR0	16	H'FFFE385A	8, 16
	Port D control register 3	PDCR3	16	H'FFFE3868	8, 16, 32
	Port D control register 2	PDCR2	16	H'FFFE386A	8, 16
	Port D control register 1	PDCR1	16	H'FFFE386C	8, 16, 32
	Port D control register 0	PDCR0	16	H'FFFE386E	8, 16
	Port D I/O register 0	PDIOR0	16	H'FFFE3872	8, 16
	Port D data register 0	PDDR0	16	H'FFFE3876	8, 16
	Port D port register 0	PDPR0	16	H'FFFE387A	8, 16
	Port E control register 1	PECR1	16	H'FFFE388C	8, 16, 32
	Port E control register 0	PECR0	16	H'FFFE388E	8, 16
	Port E I/O register 0	PEIOR0	16	H'FFFE3892	8, 16
	Port E data register 0	PEDR0	16	H'FFFE3896	8, 16
	Port E port register 0	PEPR0	16	H'FFFE389A	8, 16
	Port F control register 6	PFCR6	16	H'FFFE38A2	8, 16
	Port F control register 5	PFCR5	16	H'FFFE38A4	8, 16, 32
	Port F control register 4	PFCR4	16	H'FFFE38A6	8, 16*
	Port F control register 3	PFCR3	16	H'FFFE38A8	8, 16, 32
	Port F control register 2	PFCR2	16	H'FFFE38AA	8, 16
	Port F control register 1	PFCR1	16	H'FFFE38AC	8, 16, 32
	Port F control register 0	PFCR0	16	H'FFFE38AE	8, 16
	Port F I/O register 1	PFIOR1	16	H'FFFE38B0	8, 16, 32
	Port F I/O register 0	PFIOR0	16	H'FFFE38B2	8, 16
	Port F data register 1	PFDR1	16	H'FFFE38B4	8, 16, 32
	Port F data register 0	PFDR0	16	H'FFFE38B6	8, 16
	Port F port register 1	PFPR1	16	H'FFFE38B8	8, 16, 32
	Port F port register 0	PFPR0	16	H'FFFE38BA	8, 16

chanhvinh.com

Module Name	Register Name	Abbreviation	Number of Bits	Address	Access Size
General purpose I/O ports	Port G control register 6	PGCR6	16	H'FFFE38C2	8, 16
	Port G control register 5	PGCR5	16	H'FFFE38C4	8, 16, 32
	Port G control register 4	PGCR4	16	H'FFFE38C6	8, 16
	Port G control register 3	PGCR3	16	H'FFFE38C8	8, 16, 32
	Port G control register 2	PGCR2	16	H'FFFE38CA	8, 16
	Port G control register 1	PGCR1	16	H'FFFE38CC	8, 16, 32
	Port G control register 0	PGCR0	16	H'FFFE38CE	8, 16
	Port G I/O register 1	PGIOR1	16	H'FFFE38D0	8, 16, 32
	Port G I/O register 0	PGIOR0	16	H'FFFE38D2	8, 16
	Port G data register 1	PGDR1	16	H'FFFE38D4	8, 16, 32
	Port G data register 0	PGDR0	16	H'FFFE38D6	8, 16
	Port G port register 1	PGPR1	16	H'FFFE38D8	8, 16, 32
	Port G port register 0	PGPR0	16	H'FFFE38DA	8, 16
	Port H control register 1	PHCR1	16	H'FFFE38EC	8, 16, 32
	Port H control register 0	PHCR0	16	H'FFFE38EE	8, 16
	Port H port register 0	PHPR0	16	H'FFFE38FA	8, 16
	Port J control register 7	PJCR7	16	H'FFFE3900	8, 16, 32
	Port J control register 6	PJCR6	16	H'FFFE3902	8, 16
	Port J control register 5	PJCR5	16	H'FFFE3904	8, 16, 32
	Port J control register 4	PJCR4	16	H'FFFE3906	8, 16
	Port J control register 3	PJCR3	16	H'FFFE3908	8, 16, 32
	Port J control register 2	PJCR2	16	H'FFFE390A	8, 16
	Port J control register 1	PJCR1	16	H'FFFE390C	8, 16, 32
	Port J control register 0	PJCR0	16	H'FFFE390E	8, 16
	Port J I/O register 1	PJIOR1	16	H'FFFE3910	8, 16, 32
	Port J I/O register 0	PJIOR0	16	H'FFFE3912	8, 16
	Port J data register 1	PJDR1	16	H'FFFE3914	8, 16, 32
	Port J data register 0	PJDR0	16	H'FFFE3916	8, 16
	Port J port register 1	PJPR1	16	H'FFFE3918	8, 16, 32
	Port J port register 0	PJPR0	16	H'FFFE391A	8, 16
	Serial sound interface noise canceler control register	SNCR	16	H'FFFE393E	8, 16

chanhvinh.com

Module Name	Register Name	Abbreviation	Number of Bits	Address	Access Size
Power-down modes	Standby control register 1	STBCR1	8	H'FFFE0014	8
	Standby control register 2	STBCR2	8	H'FFFE0018	8
	Standby control register 3	STBCR3	8	H'FFFE0408	8
	Standby control register 4	STBCR4	8	H'FFFE040C	8
	Standby control register 5	STBCR5	8	H'FFFE0410	8
	Standby control register 6	STBCR6	8	H'FFFE0414	8
	Standby control register 7	STBCR7	8	H'FFFE0418	8
	Standby control register 8	STBCR8	8	H'FFFE041C	8
	Standby control register 9	STBCR9	8	H'FFFE0440	8
	Standby control register 10	STBCR10	8	H'FFFE0444	8
	Software reset control register 1	SWRSTCR1	8	H'FFFE0430	8
	Software reset control register 2	SWRSTCR2	8	H'FFFE0434	8
	System control register 1	SYSCR1	8	H'FFFE0400	8
	System control register 2	SYSCR2	8	H'FFFE0404	8
	System control register 3	SYSCR3	8	H'FFFE0420	8
	System control register 4	SYSCR4	8	H'FFFE0424	8
	System control register 5	SYSCR5	8	H'FFFE0428	8
	On-chip data-retention RAM area setting register	RRAMKP	8	H'FFFE6800	8
	Deep standby control register	DSCTR	8	H'FFFE6802	8
	Deep standby cancel source select register	DSSSR	16	H'FFFE6804	16
	Deep standby cancel edge select register	DSESR	16	H'FFFE6806	16
	Deep standby cancel source flag register	DSFR	16	H'FFFE6808	16
	XTAL crystal oscillator gain control register	XTALCTR	8	H'FFFE6810	8
User debugging interface	Instruction register	SDIR	16	H'FFFE2000	16

chanhvinh.com

51.2 Register Bits

Module Name	Register Abbreviation	Bit 31/23/15/7	Bit 30/22/14/6	Bit 29/21/13/5	Bit 28/20/12/4	Bit 27/19/11/3	Bit 26/18/10/2	Bit 25/17/9/1	Bit 24/16/8/0
Clock pulse generator	FRQCR	—	CKOEN2	CKOEN[1]	CKOEN[0]	—	—	IFC[1]	IFC[0]
		—	—	BFC[1]	BFC[0]	—	—	—	—
Interrupt controller	ICR0	NMIL	—	—	—	—	—	—	NMIE
		—	—	—	—	—	—	—	—
	ICR1	IRQ71S	IRQ70S	IRQ61S	IRQ60S	IRQ51S	IRQ50S	IRQ41S	IRQ40S
		IRQ31S	IRQ30S	IRQ21S	IRQ20S	IRQ11S	IRQ10S	IRQ01S	IRQ00S
	ICR2	—	—	—	—	—	—	—	—
		PINT7S	PINT6S	PINT5S	PINT4S	PINT3S	PINT2S	PINT1S	PINT0S
	IRQRR	—	—	—	—	—	—	—	—
		IRQ7F	IRQ6F	IRQ5F	IRQ4F	IRQ3F	IRQ2F	IRQ1F	IRQ0F
	PINTER	—	—	—	—	—	—	—	—
		PINT7E	PINT6E	PINT5E	PINT4E	PINT3E	PINT2E	PINT1E	PINT0E
	PIRR	—	—	—	—	—	—	—	—
		PINT7R	PINT6R	PINT5R	PINT4R	PINT3R	PINT2R	PINT1R	PINT0R
	IBCR	E15	E14	E13	E12	E11	E10	E9	E8
		E7	E6	E5	E4	E3	E2	E1	—
	IBNR	BE[1]	BE[0]	BOVE	—	—	—	—	—
		—	—	—	—	BN[3]	BN[2]	BN[1]	BN[0]
	IPR01								
	IPR02								
	IPR05								
	IPR06								
	IPR07								
	IPR08								

chanhvinh.com

Module Name	Register Abbreviation	Bit 31/23/15/7	Bit 30/22/14/6	Bit 29/21/13/5	Bit 28/20/12/4	Bit 27/19/11/3	Bit 26/18/10/2	Bit 25/17/9/1	Bit 24/16/8/0
Interrupt controller	IPR09								
	IPR10								
	IPR11								
	IPR12								
	IPR13								
	IPR14								
	IPR15								
	IPR16								
	IPR17								
	IPR18								
	IPR19								
	IPR20								
	IPR21								
	IPR22								
	IPR23								
	IPR24								

chanhvinh.com

Module Name	Register Abbreviation	Bit 31/23/15/7	Bit 30/22/14/6	Bit 29/21/13/5	Bit 28/20/12/4	Bit 27/19/11/3	Bit 26/18/10/2	Bit 25/17/9/1	Bit 24/16/8/0
Interrupt controller	IPR25								
	IPR26								
Cache	CCR1	—	—	—	—	—	—	—	—
		—	—	—	—	—	—	—	—
		—	—	—	—	ICF	—	—	ICE
		—	—	—	—	OCF	—	WT	OCE
	CCR2	—	—	—	—	—	—	—	—
		—	—	—	—	—	—	—	LE
		—	—	—	—	—	—	W3LOAD	W3LOCK
		—	—	—	—	—	—	W2LOAD	W2LOCK
User break controller	BAR_0	BA31	BA30	BA29	BA28	BA27	BA26	BA25	BA24
		BA23	BA22	BA21	BA20	BA19	BA18	BA17	BA16
		BA15	BA14	BA13	BA12	BA11	BA10	BA9	BA8
		BA7	BA6	BA5	BA4	BA3	BA2	BA1	BA0
	BAMR_0	BAM31	BAM30	BAM29	BAM28	BAM27	BAM26	BAM25	BAM24
		BAM23	BAM22	BAM21	BAM20	BAM19	BAM18	BAM17	BAM16
		BAM15	BAM14	BAM13	BAM12	BAM11	BAM10	BAM9	BAM8
		BAM7	BAM6	BAM5	BAM4	BAM3	BAM2	BAM1	BAM0
	BBR_0	—	—	UBID	DBE	—	—	CP[1]	CP[0]
		CD[1]	CD[0]	ID[1]	ID[0]	RW[1]	RW[0]	SZ[1]	SZ[0]
	BDR_0	BD31	BD30	BD29	BD28	BD27	BD26	BD25	BD24
		BD23	BD22	BD21	BD20	BD19	BD18	BD17	BD16
		BD15	BD14	BD13	BD12	BD11	BD10	BD9	BD8
		BD7	BD6	BD5	BD4	BD3	BD2	BD1	BD0
	BDMR_0	BDM31	BDM30	BDM29	BDM28	BDM27	BDM26	BDM25	BDM24
		BDM23	BDM22	BDM21	BDM20	BDM19	BDM18	BDM17	BDM16
		BDM15	BDM14	BDM13	BDM12	BDM11	BDM10	BDM9	BDM8
		BDM7	BDM6	BDM5	BDM4	BDM3	BDM2	BDM1	BDM0

chanhvinh.com

Module Name	Register Abbreviation	Bit 31/23/15/7	Bit 30/22/14/6	Bit 29/21/13/5	Bit 28/20/12/4	Bit 27/19/11/3	Bit 26/18/10/2	Bit 25/17/9/1	Bit 24/16/8/0
User break controller	BAR_1	BA31	BA30	BA29	BA28	BA27	BA26	BA25	BA24
		BA23	BA22	BA21	BA20	BA19	BA18	BA17	BA16
		BA15	BA14	BA13	BA12	BA11	BA10	BA9	BA8
		BA7	BA6	BA5	BA4	BA3	BA2	BA1	BA0
	BAMR_1	BAM31	BAM30	BAM29	BAM28	BAM27	BAM26	BAM25	BAM24
		BAM23	BAM22	BAM21	BAM20	BAM19	BAM18	BAM17	BAM16
		BAM15	BAM14	BAM13	BAM12	BAM11	BAM10	BAM9	BAM8
		BAM7	BAM6	BAM5	BAM4	BAM3	BAM2	BAM1	BAM0
	BBR_1	—	—	UBID	DBE	—	—	CP[1]	CP[0]
		CD[1]	CD[0]	ID[1]	ID[0]	RW[1]	RW[0]	SZ[1]	SZ[0]
	BDR_1	BD31	BD30	BD29	BD28	BD27	BD26	BD25	BD24
		BD23	BD22	BD21	BD20	BD19	BD18	BD17	BD16
		BD15	BD14	BD13	BD12	BD11	BD10	BD9	BD8
		BD7	BD6	BD5	BD4	BD3	BD2	BD1	BD0
	BDMR_1	BDM31	BDM30	BDM29	BDM28	BDM27	BDM26	BDM25	BDM24
		BDM23	BDM22	BDM21	BDM20	BDM19	BDM18	BDM17	BDM16
		BDM15	BDM14	BDM13	BDM12	BDM11	BDM10	BDM9	BDM8
		BDM7	BDM6	BDM5	BDM4	BDM3	BDM2	BDM1	BDM0
	BRCR	—	—	—	—	—	—	—	—
		—	—	—	—	UTOD1	UTOD0	CKS[1]	CKS[0]
		SCMFC0	SCMFC1	SCMFD0	SCMFD1	—	—	—	—
		—	PCB1	PCB0	—	—	—	—	—
Bus state controller	CMNCR	—	—	—	—	—	—	—	—
		—	—	—	—	—	—	—	—
		—	—	—	—	BLOCK	DPRTY[1]	DPRTY[0]	DMAIW[2]
		DMAIW[1]	DMAIW[0]	DMAIWA	—	—	—	HIZMEM	HIZCNT
	CS0BCR	—	IWW[2]	IWW[1]	IWW[0]	IWRWD[2]	IWRWD[1]	IWRWD[0]	IWRWS[2]
		IWRWS[1]	IWRWS[0]	IWRRD[2]	IWRRD[1]	IWRRD[0]	IWRRS[2]	IWRRS[1]	IWRRS[0]
		—	TYPE[2]	TYPE[1]	TYPE[0]	ENDIAN	BSZ[1]	BSZ[0]	—
		—	—	—	—	—	—	—	—

chanhvinh.com

Module Name	Register Abbreviation	Bit 31/23/15/7	Bit 30/22/14/6	Bit 29/21/13/5	Bit 28/20/12/4	Bit 27/19/11/3	Bit 26/18/10/2	Bit 25/17/9/1	Bit 24/16/8/0
Bus state controller	CS1BCR	—	IWW[2]	IWW[1]	IWW[0]	IWRWD[2]	IWRWD[1]	IWRWD[0]	IWRWS[2]
		IWRWS[1]	IWRWS[0]	IWRRD[2]	IWRRD[1]	IWRRD[0]	IWRRS[2]	IWRRS[1]	IWRRS[0]
		—	TYPE[2]	TYPE[1]	TYPE[0]	ENDIAN	BSZ[1]	BSZ[0]	—
		—	—	—	—	—	—	—	—
	CS2BCR	—	IWW[2]	IWW[1]	IWW[0]	IWRWD[2]	IWRWD[1]	IWRWD[0]	IWRWS[2]
		IWRWS[1]	IWRWS[0]	IWRRD[2]	IWRRD[1]	IWRRD[0]	IWRRS[2]	IWRRS[1]	IWRRS[0]
		—	TYPE[2]	TYPE[1]	TYPE[0]	ENDIAN	BSZ[1]	BSZ[0]	—
		—	—	—	—	—	—	—	—
	CS3BCR	—	IWW[2]	IWW[1]	IWW[0]	IWRWD[2]	IWRWD[1]	IWRWD[0]	IWRWS[2]
		IWRWS[1]	IWRWS[0]	IWRRD[2]	IWRRD[1]	IWRRD[0]	IWRRS[2]	IWRRS[1]	IWRRS[0]
		—	TYPE[2]	TYPE[1]	TYPE[0]	ENDIAN	BSZ[1]	BSZ[0]	—
		—	—	—	—	—	—	—	—
	CS4BCR	—	IWW[2]	IWW[1]	IWW[0]	IWRWD[2]	IWRWD[1]	IWRWD[0]	IWRWS[2]
		IWRWS[1]	IWRWS[0]	IWRRD[2]	IWRRD[1]	IWRRD[0]	IWRRS[2]	IWRRS[1]	IWRRS[0]
		—	TYPE[2]	TYPE[1]	TYPE[0]	ENDIAN	BSZ[1]	BSZ[0]	—
		—	—	—	—	—	—	—	—
	CS5BCR	—	IWW[2]	IWW[1]	IWW[0]	IWRWD[2]	IWRWD[1]	IWRWD[0]	IWRWS[2]
		IWRWS[1]	IWRWS[0]	IWRRD[2]	IWRRD[1]	IWRRD[0]	IWRRS[2]	IWRRS[1]	IWRRS[0]
		—	TYPE[2]	TYPE[1]	TYPE[0]	ENDIAN	BSZ[1]	BSZ[0]	—
		—	—	—	—	—	—	—	—
	CS0WCR	—	—	—	—	—	—	—	—
		—	—	—	BAS	—	—	—	—
		—	—	—	SW[1]	SW[0]	WR[3]	WR[2]	WR[1]
		WR[0]	WM	—	—	—	—	HW[1]	HW[0]
	CS0WCR	—	—	—	—	—	—	—	—
		—	—	BST[1]	BST[0]	—	—	BW[1]	BW[0]
		—	—	—	—	—	W[3]	W[2]	W[1]
		W[0]	WM	—	—	—	—	—	—
	CS0WCR	—	—	—	—	—	—	—	—
		—	—	—	—	—	—	BW[1]	BW[0]
		—	—	—	—	—	W[3]	W[2]	W[1]
		W[0]	WM	—	—	—	—	—	—

chanhvinh.com

Module Name	Register Abbreviation	Bit 31/23/15/7	Bit 30/22/14/6	Bit 29/21/13/5	Bit 28/20/12/4	Bit 27/19/11/3	Bit 26/18/10/2	Bit 25/17/9/1	Bit 24/16/8/0
Bus state controller	CS1WCR	—	—	—	—	—	—	—	—
		—	—	—	BAS	—	WW[2]	WW[1]	WW[0]
		—	—	—	SW[1]	SW[0]	WR[3]	WR[2]	WR[1]
		WR[0]	WM	—	—	—	—	HW[1]	HW[0]
	CS2WCR	—	—	—	—	—	—	—	—
		—	—	—	BAS	—	—	—	—
		—	—	—	—	—	WR[3]	WR[2]	WR[1]
		WR[0]	WM	—	—	—	—	—	—
	CS2WCR	—	—	—	—	—	—	—	—
		—	—	—	—	—	—	—	—
		—	—	—	—	—	—	—	A2CL1
		A2CL0	—	—	—	—	—	—	—
	CS3WCR	—	—	—	—	—	—	—	—
		—	—	—	BAS	—	—	—	—
		—	—	—	—	—	WR[3]	WR[2]	WR[1]
		WR[0]	WM	—	—	—	—	—	—
	CS3WCR	—	—	—	—	—	—	—	—
		—	—	—	—	—	—	—	—
		—	WTRP[1]	WTRP[0]	—	WTRCD[1]	WTRCD[0]	—	A3CL1
		A3CL0	—	—	TRWL[1]	TRWL[0]	—	WTRC[1]	WTRC[0]
	CS4WCR	—	—	—	—	—	—	—	—
		—	—	—	BAS	—	WW[2]	WW[1]	WW[0]
		—	—	—	SW[1]	SW[0]	WR[3]	WR[2]	WR[1]
		WR[0]	WM	—	—	—	—	HW[1]	HW[0]
	CS4WCR	—	—	—	—	—	—	—	—
		—	—	BST[1]	BST[0]	—	—	BW[1]	BW[0]
		—	—	—	SW[1]	SW[0]	W[3]	W[2]	W[1]
		W[0]	WM	—	—	—	—	HW[1]	HW[0]
	CS5WCR	—	—	—	—	—	—	—	—
		—	—	SZSEL	MPXW/BAS	—	WW[2]	WW[1]	WW[0]
		—	—	—	SW[1]	SW[0]	WR[3]	WR[2]	WR[1]
		WR[0]	WM	—	—	—	—	HW[1]	HW[0]

chanhvinh.com

Module Name	Register Abbreviation	Bit 31/23/15/7	Bit 30/22/14/6	Bit 29/21/13/5	Bit 28/20/12/4	Bit 27/19/11/3	Bit 26/18/10/2	Bit 25/17/9/1	Bit 24/16/8/0
Bus state controller	CS5WCR	—	—	—	—	—	—	—	—
		—	—	SA[1]	SA[0]	—	—	—	—
		—	TED[3]	TED[2]	TED[1]	TED[0]	PCW[3]	PCW[2]	PCW[1]
		PCW[0]	WM	—	—	TEH[3]	TEH[2]	TEH[1]	TEH[0]
	SDCR	—	—	—	—	—	—	—	—
		—	—	—	A2ROW[1]	A2ROW[0]	—	A2COL[1]	A2COL[0]
		—	—	DEEP	—	RFSH	RMODE	PDOWN	BACTV
		—	—	—	A3ROW[1]	A3ROW[0]	—	A3COL[1]	A3COL[0]
	RTCSR	—	—	—	—	—	—	—	—
		—	—	—	—	—	—	—	—
		—	—	—	—	—	—	—	—
		CMF	CMIE	CKS[2]	CKS[1]	CKS[0]	RRC[2]	RRC[1]	RRC[0]
	RTCNT	—	—	—	—	—	—	—	—
		—	—	—	—	—	—	—	—
		—	—	—	—	—	—	—	—
	RTCOR	—	—	—	—	—	—	—	—
		—	—	—	—	—	—	—	—
		—	—	—	—	—	—	—	—
Direct memory access controller	SAR0								
	DAR0								
	DMATCR0	—	—	—	—	—	—	—	—

chanhvinh.com

Module Name	Register Abbreviation	Bit 31/23/15/7	Bit 30/22/14/6	Bit 29/21/13/5	Bit 28/20/12/4	Bit 27/19/11/3	Bit 26/18/10/2	Bit 25/17/9/1	Bit 24/16/8/0
Direct memory access controller	CHCR0	TC	—	RLDSAR	RLDDAR	—	DAF	SAF	—
		DO	TL	—	TEMASK	HE	HIE	AM	AL
		DM[1]	DM[0]	SM[1]	SM[0]	RS[3]	RS[2]	RS[1]	RS[0]
		DL	DS	TB	TS[1]	TS[0]	IE	TE	DE
	RSAR0								
	RDAR0								
	RDMATCR0	—	—	—	—	—	—	—	—
	SAR1								
	DAR1								
	DMATCR1	—	—	—	—	—	—	—	—
	CHCR1	TC	—	RLDSAR	RLDDAR	—	DAF	SAF	—
		DO	TL	—	TEMASK	HE	HIE	AM	AL
		DM[1]	DM[0]	SM[1]	SM[0]	RS[3]	RS[2]	RS[1]	RS[0]
		DL	DS	TB	TS[1]	TS[0]	IE	TE	DE

chanhvinh.com

Module Name	Register Abbreviation	Bit 31/23/15/7	Bit 30/22/14/6	Bit 29/21/13/5	Bit 28/20/12/4	Bit 27/19/11/3	Bit 26/18/10/2	Bit 25/17/9/1	Bit 24/16/8/0
Direct memory access controller	RSAR1								
	RDAR1								
	RDMATCR1	—	—	—	—	—	—	—	—
	SAR2								
	DAR2								
	DMATCR2	—	—	—	—	—	—	—	—
	CHCR2	TC	—	RLDSAR	RLDDAR	—	DAF	SAF	—
		—	—	—	TEMASK	HE	HIE	—	—
		DM[1]	DM[0]	SM[1]	SM[0]	RS[3]	RS[2]	RS[1]	RS[0]
		—	—	TB	TS[1]	TS[0]	IE	TE	DE
	RSAR2								

chanhvinh.com

Module Name	Register Abbreviation	Bit 31/23/15/7	Bit 30/22/14/6	Bit 29/21/13/5	Bit 28/20/12/4	Bit 27/19/11/3	Bit 26/18/10/2	Bit 25/17/9/1	Bit 24/16/8/0
Direct memory access controller	RDAR2								
	RDMATCR2	—	—	—	—	—	—	—	—
	SAR3								
	DAR3								
	DMATCR3	—	—	—	—	—	—	—	—
	CHCR3	TC	—	RLDSAR	RLDDAR	—	DAF	SAF	—
		—	—	—	TEMASK	HE	HIE	—	—
		DM[1]	DM[0]	SM[1]	SM[0]	RS[3]	RS[2]	RS[1]	RS[0]
		—	—	TB	TS[1]	TS[0]	IE	TE	DE
	RSAR3								
	RDAR3								

chanhvinh.com

Module Name	Register Abbreviation	Bit 31/23/15/7	Bit 30/22/14/6	Bit 29/21/13/5	Bit 28/20/12/4	Bit 27/19/11/3	Bit 26/18/10/2	Bit 25/17/9/1	Bit 24/16/8/0
Direct memory access controller	RDMATCR3	—	—	—	—	—	—	—	—
	SAR4								
	DAR4								
	DMATCR4	—	—	—	—	—	—	—	—
	CHCR4	TC	—	RLDSAR	RLDDAR	—	DAF	SAF	—
		—	—	—	TEMASK	HE	HIE	—	—
		DM[1]	DM[0]	SM[1]	SM[0]	RS[3]	RS[2]	RS[1]	RS[0]
		—	—	TB	TS[1]	TS[0]	IE	TE	DE
	RSAR4								
	RDAR4								
	RDMATCR4	—	—	—	—	—	—	—	—

chanhvinh.com

Module Name	Register Abbreviation	Bit 31/23/15/7	Bit 30/22/14/6	Bit 29/21/13/5	Bit 28/20/12/4	Bit 27/19/11/3	Bit 26/18/10/2	Bit 25/17/9/1	Bit 24/16/8/0
Direct memory access controller	SAR5								
	DAR5								
	DMATCR5	—	—	—	—	—	—	—	—
	CHCR5	TC	—	RLDSAR	RLDDAR	—	DAF	SAF	—
		—	—	—	TEMASK	HE	HIE	—	—
		DM[1]	DM[0]	SM[1]	SM[0]	RS[3]	RS[2]	RS[1]	RS[0]
		—	—	TB	TS[1]	TS[0]	IE	TE	DE
	RSAR5								
	RDAR5								
	RDMATCR5	—	—	—	—	—	—	—	—
	SAR6								

chanhvinh.com

Module Name	Register Abbreviation	Bit 31/23/15/7	Bit 30/22/14/6	Bit 29/21/13/5	Bit 28/20/12/4	Bit 27/19/11/3	Bit 26/18/10/2	Bit 25/17/9/1	Bit 24/16/8/0
Direct memory access controller	DAR6								
	DMATCR6	—	—	—	—	—	—	—	—
	CHCR6	TC	—	RLDSAR	RLDDAR	—	DAF	SAF	—
		—	—	—	TEMASK	HE	HIE	—	—
		DM[1]	DM[0]	SM[1]	SM[0]	RS[3]	RS[2]	RS[1]	RS[0]
		—	—	TB	TS[1]	TS[0]	IE	TE	DE
	RSAR6								
	RDAR6								
	RDMATCR6	—	—	—	—	—	—	—	—
	SAR7								
	DAR7								

chanhvinh.com

Module Name	Register Abbreviation	Bit 31/23/15/7	Bit 30/22/14/6	Bit 29/21/13/5	Bit 28/20/12/4	Bit 27/19/11/3	Bit 26/18/10/2	Bit 25/17/9/1	Bit 24/16/8/0
Direct memory access controller	DMATCR7	—	—	—	—	—	—	—	—
	CHCR7	TC	—	RLDSAR	RLDDAR	—	DAF	SAF	—
		—	—	—	TEMASK	HE	HIE	—	—
		DM[1]	DM[0]	SM[1]	SM[0]	RS[3]	RS[2]	RS[1]	RS[0]
		—	—	TB	TS[1]	TS[0]	IE	TE	DE
	RSAR7								
	RDAR7								
	RDMATCR7	—	—	—	—	—	—	—	—
	SAR8								
	DAR8								
	DMATCR8	—	—	—	—	—	—	—	—

chanhvinh.com

Module Name	Register Abbreviation	Bit 31/23/15/7	Bit 30/22/14/6	Bit 29/21/13/5	Bit 28/20/12/4	Bit 27/19/11/3	Bit 26/18/10/2	Bit 25/17/9/1	Bit 24/16/8/0
Direct memory access controller	CHCR8	TC	—	RLDSAR	RLDDAR	—	DAF	SAF	—
		—	—	—	TEMASK	HE	HIE	—	—
		DM[1]	DM[0]	SM[1]	SM[0]	RS[3]	RS[2]	RS[1]	RS[0]
		—	—	TB	TS[1]	TS[0]	IE	TE	DE
	RSAR8								
	RDAR8								
	RDMATCR8	—	—	—	—	—	—	—	—
	SAR9								
	DAR9								
	DMATCR9	—	—	—	—	—	—	—	—
	CHCR9	TC	—	RLDSAR	RLDDAR	—	DAF	SAF	—
		—	—	—	TEMASK	HE	HIE	—	—
		DM[1]	DM[0]	SM[1]	SM[0]	RS[3]	RS[2]	RS[1]	RS[0]
		—	—	TB	TS[1]	TS[0]	IE	TE	DE

chanhvinh.com

Module Name	Register Abbreviation	Bit 31/23/15/7	Bit 30/22/14/6	Bit 29/21/13/5	Bit 28/20/12/4	Bit 27/19/11/3	Bit 26/18/10/2	Bit 25/17/9/1	Bit 24/16/8/0
Direct memory access controller	RSAR9								
	RDAR9								
	RDMATCR9	—	—	—	—	—	—	—	—
	SAR10								
	DAR10								
	DMATCR10	—	—	—	—	—	—	—	—
	CHCR10	TC	—	RLDSAR	RLDDAR	—	DAF	SAF	—
		—	—	—	TEMASK	HE	HIE	—	—
		DM[1]	DM[0]	SM[1]	SM[0]	RS[3]	RS[2]	RS[1]	RS[0]
		—	—	TB	TS[1]	TS[0]	IE	TE	DE
	RSAR10								

chanhvinh.com

Module Name	Register Abbreviation	Bit 31/23/15/7	Bit 30/22/14/6	Bit 29/21/13/5	Bit 28/20/12/4	Bit 27/19/11/3	Bit 26/18/10/2	Bit 25/17/9/1	Bit 24/16/8/0
Direct memory access controller	RDAR10								
	RDMATCR10	—	—	—	—	—	—	—	—
	SAR11								
	DAR11								
	DMATCR11	—	—	—	—	—	—	—	—
	CHCR11	TC	—	RLDSAR	RLDDAR	—	DAF	SAF	—
		—	—	—	TEMASK	HE	HIE	—	—
		DM[1]	DM[0]	SM[1]	SM[0]	RS[3]	RS[2]	RS[1]	RS[0]
		—	—	TB	TS[1]	TS[0]	IE	TE	DE
	RSAR11								
	RDAR11								

chanhvinh.com

Module Name	Register Abbreviation	Bit 31/23/15/7	Bit 30/22/14/6	Bit 29/21/13/5	Bit 28/20/12/4	Bit 27/19/11/3	Bit 26/18/10/2	Bit 25/17/9/1	Bit 24/16/8/0
Direct memory access controller	RDMATCR11	—	—	—	—	—	—	—	—
	SAR12								
	DAR12								
	DMATCR12	—	—	—	—	—	—	—	—
	CHCR12	TC	—	RLDSAR	RLDDAR	—	DAF	SAF	—
		—	—	—	TEMASK	HE	HIE	—	—
		DM[1]	DM[0]	SM[1]	SM[0]	RS[3]	RS[2]	RS[1]	RS[0]
		—	—	TB	TS[1]	TS[0]	IE	TE	DE
	RSAR12								
	RDAR12								
	RDMATCR12	—	—	—	—	—	—	—	—

chanhvinh.com

Module Name	Register Abbreviation	Bit 31/23/15/7	Bit 30/22/14/6	Bit 29/21/13/5	Bit 28/20/12/4	Bit 27/19/11/3	Bit 26/18/10/2	Bit 25/17/9/1	Bit 24/16/8/0
Direct memory access controller	SAR13								
	DAR13								
	DMATCR13	—	—	—	—	—	—	—	—
	CHCR13	TC	—	RLDSAR	RLDDAR	—	DAF	SAF	—
		—	—	—	TEMASK	HE	HIE	—	—
		DM[1]	DM[0]	SM[1]	SM[0]	RS[3]	RS[2]	RS[1]	RS[0]
		—	—	TB	TS[1]	TS[0]	IE	TE	DE
	RSAR13								
	RDAR13								
	RDMATCR13	—	—	—	—	—	—	—	—
	SAR14								

chanhvinh.com

Module Name	Register Abbreviation	Bit 31/23/15/7	Bit 30/22/14/6	Bit 29/21/13/5	Bit 28/20/12/4	Bit 27/19/11/3	Bit 26/18/10/2	Bit 25/17/9/1	Bit 24/16/8/0
Direct memory access controller	DAR14								
	DMATCR14	—	—	—	—	—	—	—	—
	CHCR14	TC	—	RLDSAR	RLDDAR	—	DAF	SAF	—
		—	—	—	TEMASK	HE	HIE	—	—
		DM[1]	DM[0]	SM[1]	SM[0]	RS[3]	RS[2]	RS[1]	RS[0]
		—	—	TB	TS[1]	TS[0]	IE	TE	DE
	RSAR14								
	RDAR14								
	RDMATCR14	—	—	—	—	—	—	—	—
	SAR15								
	DAR15								

chanhvinh.com

Module Name	Register Abbreviation	Bit 31/23/15/7	Bit 30/22/14/6	Bit 29/21/13/5	Bit 28/20/12/4	Bit 27/19/11/3	Bit 26/18/10/2	Bit 25/17/9/1	Bit 24/16/8/0
Direct memory access controller	DMATCR15	—	—	—	—	—	—	—	—
	CHCR15	TC	—	RLDSAR	RLDDAR	—	DAF	SAF	—
		—	—	—	TEMASK	HE	HIE	—	—
		DM[1]	DM[0]	SM[1]	SM[0]	RS[3]	RS[2]	RS[1]	RS[0]
		—	—	TB	TS[1]	TS[0]	IE	TE	DE
	RSAR15								
	RDAR15								
	RDMATCR15	—	—	—	—	—	—	—	—
	DMAOR	—	—	CMS[1]	CMS[0]	—	—	PR[1]	PR[0]
		—	—	—	—	—	AE	NMIF	DME
	DMARS0	CH1MID[5]	CH1MID[4]	CH1MID[3]	CH1MID[2]	CH1MID[1]	CH1MID[0]	CH1RID[1]	CH1RID[0]
		CH0MID[5]	CH0MID[4]	CH0MID[3]	CH0MID[2]	CH0MID[1]	CH0MID[0]	CH0RID[1]	CH0RID[0]
	DMARS1	CH3MID[5]	CH3MID[4]	CH3MID[3]	CH3MID[2]	CH3MID[1]	CH3MID[0]	CH3RID[1]	CH3RID[0]
		CH2MID[5]	CH2MID[4]	CH2MID[3]	CH2MID[2]	CH2MID[1]	CH2MID[0]	CH2RID[1]	CH2RID[0]
	DMARS2	CH5MID[5]	CH5MID[4]	CH5MID[3]	CH5MID[2]	CH5MID[1]	CH5MID[0]	CH5RID[1]	CH5RID[0]
		CH4MID[5]	CH4MID[4]	CH4MID[3]	CH4MID[2]	CH4MID[1]	CH4MID[0]	CH4RID[1]	CH4RID[0]
	DMARS3	CH7MID[5]	CH7MID[4]	CH7MID[3]	CH7MID[2]	CH7MID[1]	CH7MID[0]	CH7RID[1]	CH7RID[0]
		CH6MID[5]	CH6MID[4]	CH6MID[3]	CH6MID[2]	CH6MID[1]	CH6MID[0]	CH6RID[1]	CH6RID[0]
	DMARS4	CH9MID[5]	CH9MID[4]	CH9MID[3]	CH9MID[2]	CH9MID[1]	CH9MID[0]	CH9RID[1]	CH9RID[0]
		CH8MID[5]	CH8MID[4]	CH8MID[3]	CH8MID[2]	CH8MID[1]	CH8MID[0]	CH8RID[1]	CH8RID[0]

chanhvinh.com

Module Name	Register Abbreviation	Bit 31/23/15/7	Bit 30/22/14/6	Bit 29/21/13/5	Bit 28/20/12/4	Bit 27/19/11/3	Bit 26/18/10/2	Bit 25/17/9/1	Bit 24/16/8/0
Direct memory access controller	DMARS5	CH11MID[5]	CH11MID[4]	CH11MID[3]	CH11MID[2]	CH11MID[1]	CH11MID[0]	CH11RID[1]	CH11RID[0]
		CH10MID[5]	CH10MID[4]	CH10MID[3]	CH10MID[2]	CH10MID[1]	CH10MID[0]	CH10RID[1]	CH10RID[0]
	DMARS6	CH13MID[5]	CH13MID[4]	CH13MID[3]	CH13MID[2]	CH13MID[1]	CH13MID[0]	CH13RID[1]	CH13RID[0]
		CH12MID[5]	CH12MID[4]	CH12MID[3]	CH12MID[2]	CH12MID[1]	CH12MID[0]	CH12RID[1]	CH12RID[0]
	DMARS7	CH15MID[5]	CH15MID[4]	CH15MID[3]	CH15MID[2]	CH15MID[1]	CH15MID[0]	CH15RID[1]	CH15RID[0]
		CH14MID[5]	CH14MID[4]	CH14MID[3]	CH14MID[2]	CH14MID[1]	CH14MID[0]	CH14RID[1]	CH14RID[0]
Multi-function timer pulse unit 2	TCR_0	CCLR[2]	CCLR[1]	CCLR[0]	CKEG[1]	CKEG[0]	TPSC[2]	TPSC[1]	TPSC[0]
	TMDR_0	—	BFE	BFB	BFA	MD[3]	MD[2]	MD[1]	MD[0]
	TIORH_0	IOB[3]	IOB[2]	IOB[1]	IOB[0]	IOA[3]	IOA[2]	IOA[1]	IOA[0]
	TIORL_0	IOD[3]	IOD[2]	IOD[1]	IOD[0]	IOC[3]	IOC[2]	IOC[1]	IOC[0]
	TIER_0	TTGE	—	—	TCIEV	TGIED	TGIEC	TGIEB	TGIEA
	TSR_0	TCFD	—	—	TCFV	TGFD	TGFC	TGFB	TGFA
	TCNT_0								
	TGRA_0								
	TGRB_0								
	TGRC_0								
	TGRD_0								
	TGRE_0								
	TGRF_0								
	TIER2_0	TTGE2	—	—	—	—	—	TGIEF	TGIEE
	TSR2_0	—	—	—	—	—	—	TGFF	TGFE
	TBTM_0	—	—	—	—	—	TTSE	TTSB	TTSA
	TCR_1	—	CCLR[1]	CCLR[0]	CKEG[1]	CKEG[0]	TPSC[2]	TPSC[1]	TPSC[0]
	TMDR_1	—	—	—	—	MD[3]	MD[2]	MD[1]	MD[0]
	TIOR_1	IOB[3]	IOB[2]	IOB[1]	IOB[0]	IOA[3]	IOA[2]	IOA[1]	IOA[0]

chanhvinh.com

Module Name	Register Abbreviation	Bit 31/23/15/7	Bit 30/22/14/6	Bit 29/21/13/5	Bit 28/20/12/4	Bit 27/19/11/3	Bit 26/18/10/2	Bit 25/17/9/1	Bit 24/16/8/0
Multi-function timer pulse unit 2	TIER_1	TTGE	—	TCIEU	TCIEV	—	—	TGIEB	TGIEA
	TSR_1	TCFD	—	TCFU	TCFV	TGFD	TGFC	TGFB	TGFA
	TCNT_1								
	TGRA_1								
	TGRB_1								
	TICCR	—	—	—	—	I2BE	I2AE	I1BE	I1AE
	TCR_2	—	CCLR[1]	CCLR[0]	CKEG[1]	CKEG[0]	TPSC[2]	TPSC[1]	TPSC[0]
	TMDR_2	—	—	—	—	MD[3]	MD[2]	MD[1]	MD[0]
	TIOR_2	IOB[3]	IOB[2]	IOB[1]	IOB[0]	IOA[3]	IOA[2]	IOA[1]	IOA[0]
	TIER_2	TTGE	—	TCIEU	TCIEV	—	—	TGIEB	TGIEA
	TSR_2	TCFD	—	TCFU	TCFV	TGFD	TGFC	TGFB	TGFA
	TCNT_2								
	TGRA_2								
	TGRB_2								
	TCR_3	CCLR[2]	CCLR[1]	CCLR[0]	CKEG[1]	CKEG[0]	TPSC[2]	TPSC[1]	TPSC[0]
	TMDR_3	—	—	BFB	BFA	MD[3]	MD[2]	MD[1]	MD[0]
	TIORH_3	IOB[3]	IOB[2]	IOB[1]	IOB[0]	IOA[3]	IOA[2]	IOA[1]	IOA[0]
	TIORL_3	IOD[3]	IOD[2]	IOD[1]	IOD[0]	IOC[3]	IOC[2]	IOC[1]	IOC[0]
	TIER_3	TTGE	—	—	TCIEV	TGIED	TGIEC	TGIEB	TGIEA
	TSR_3	TCFD	—	—	TCFV	TGFD	TGFC	TGFB	TGFA
	TCNT_3								
	TGRA_3								
	TGRB_3								

chanhvinh.com

Module Name	Register Abbreviation	Bit 31/23/15/7	Bit 30/22/14/6	Bit 29/21/13/5	Bit 28/20/12/4	Bit 27/19/11/3	Bit 26/18/10/2	Bit 25/17/9/1	Bit 24/16/8/0
Multi-function timer pulse unit 2	TGRC_3								
	TGRD_3								
	TBTM_3	—	—	—	—	—	—	TTSB	TTSA
	TCR_4	CCLR[2]	CCLR[1]	CCLR[0]	CKEG[1]	CKEG[0]	TPSC[2]	TPSC[1]	TPSC[0]
	TMDR_4	—	—	BFB	BFA	MD[3]	MD[2]	MD[1]	MD[0]
	TIORH_4	IOB[3]	IOB[2]	IOB[1]	IOB[0]	IOA[3]	IOA[2]	IOA[1]	IOA[0]
	TIORL_4	IOD[3]	IOD[2]	IOD[1]	IOD[0]	IOC[3]	IOC[2]	IOC[1]	IOC[0]
	TIER_4	TTGE	TTGE2	—	TCIEV	TGIED	TGIEC	TGIEB	TGIEA
	TSR_4	TCFD	—	—	TCFV	TGFD	TGFC	TGFB	TGFA
	TCNT_4								
	TGRA_4								
	TGRB_4								
	TGRC_4								
	TGRD_4								
	TBTM_4	—	—	—	—	—	—	TTSB	TTSA
	TADCR	BF[1]	BF[0]	—	—	—	—	—	—
		UT4AE	DT4AE	UT4BE	DT4BE	ITA3AE	ITA4VE	ITB3AE	ITB4VE
	TADCORA_4								
	TADCORB_4								
	TADCOBRA_4								
	TADCOBRB_4								

chanhvinh.com

Module Name	Register Abbreviation	Bit 31/23/15/7	Bit 30/22/14/6	Bit 29/21/13/5	Bit 28/20/12/4	Bit 27/19/11/3	Bit 26/18/10/2	Bit 25/17/9/1	Bit 24/16/8/0
Multi-function timer pulse unit 2	TSTR	CST4	CST3	—	—	—	CST2	CST1	CST0
	TSYR	SYNC4	SYNC3	—	—	—	SYNC2	SYNC1	SYNC0
	TRWER	—	—	—	—	—	—	—	RWE
	TOER	—	—	OE4D	OE4C	OE3D	OE4B	OE4A	OE3B
	TOCR1	—	PSYE	—	—	TOCL	TOCS	OLSN	OLSP
	TOCR2	BF[1]	BF[0]	OLS3N	OLS3P	OLS2N	OLS2P	OLS1N	OLS1P
	TGCR	—	BDC	N	P	FB	WF	VF	UF
	TCDR								
	TDDR								
	TCNTS								
	TCBR								
	TITCR	T3AEN	3ACOR[2]	3ACOR[1]	3ACOR[0]	T4VEN	4VCOR[2]	4VCOR[1]	4VCOR[0]
	TITCNT	—	3ACNT[2]	3ACNT[1]	3ACNT[0]	—	4VCNT[2]	4VCNT[1]	4VCNT[0]
	TBTER	—	—	—	—	—	—	BTE[1]	BTE[0]
	TDER	—	—	—	—	—	—	—	TDER
	TWCR	CCE	—	—	—	—	—	—	WRE
	TOLBR	—	—	OLS3N	OLS3P	OLS2N	OLS2P	OLS1N	OLS1P
Compare match timer	CMSTR	—	—	—	—	—	—	—	—
		—	—	—	—	—	—	STR1	STR0
	CMCSR_0	—	—	—	—	—	—	—	—
		CMF	CMIE	—	—	—	—	CKS[1]	CKS[0]
	CMCNT_0								
	CMCOR_0								
	CMCSR_1	—	—	—	—	—	—	—	—
		CMF	CMIE	—	—	—	—	CKS[1]	CKS[0]

chanhvinh.com

Module Name	Register Abbreviation	Bit 31/23/15/7	Bit 30/22/14/6	Bit 29/21/13/5	Bit 28/20/12/4	Bit 27/19/11/3	Bit 26/18/10/2	Bit 25/17/9/1	Bit 24/16/8/0
Compare match timer	CMCNT_1								
	CMCOR_1								
Watchdog timer	WTCNT								
	WTCSR	IOVF	WT/$\overline{IT}$	TME	—	—	CKS[2]	CKS[1]	CKS[0]
	WRCSR	WOVF	RSTE	RSTS	—	—	—	—	—
Realtime clock	R64CNT	—	1 Hz	2 Hz	4 Hz	8 Hz	16 Hz	32 Hz	64 Hz
	RSECCNT	—	10 seconds [2]	10 seconds [1]	10 seconds [0]	1 second [3]	1 second [2]	1 second [1]	1 second [0]
	RMINCNT	—	10 minutes [2]	10 minutes [1]	10 minutes [0]	1 minute [3]	1 minute [2]	1 minute [1]	1 minute [0]
	RHRCNT	—	—	10 hours [1]	10 hours [0]	1 hour [3]	1 hour [2]	1 hour [1]	1 hour [0]
	RWKCNT	—	—	—	—	—	Day [2]	Day [1]	Day [0]
	RDAYCNT	—	—	10 days [1]	10 days [0]	1 day [3]	1 day [2]	1 day [1]	1 day [0]
	RMONCNT	—	—	—	10 months	1 month [3]	1 month [2]	1 month [1]	1 month [0]
	RYRCNT	1000 years [3]	1000 years [2]	1000 years [1]	1000 years [0]	100 years [3]	100 years [2]	100 years [1]	100 years [0]
		10 years [3]	10 years [2]	10 years [1]	10 years [0]	1 year [3]	1 year [2]	1 year [1]	1 year [0]
	RSECAR	ENB	10 seconds [2]	10 seconds [1]	10 seconds [0]	1 second [3]	1 second [2]	1 second [1]	1 second [0]
	RMINAR	ENB	10 minutes [2]	10 minutes [1]	10 minutes [0]	1 minute [3]	1 minute [2]	1 minute [1]	1 minute [0]
	RHRAR	ENB	—	10 hours [1]	10 hours [0]	1 hour [3]	1 hour [2]	1 hour [1]	1 hour [0]
	RWKAR	ENB	—	—	—	—	Day [2]	Day [1]	Day [0]
	RDAYAR	ENB	—	10 days [1]	10 days [0]	1 day [3]	1 day [2]	1 day [1]	1 day [0]
	RMONAR	ENB	—	—	10 months	1 month [3]	1 month [2]	1 month [1]	1 month [0]
	RYRAR	1000 years [3]	1000 years [2]	1000 years [1]	1000 years [0]	100 years [3]	100 years [2]	100 years [1]	100 years [0]
		10 years [3]	10 years [2]	10 years [1]	10 years [0]	1 year [3]	1 year [2]	1 year [1]	1 year [0]
	RCR1	CF	—	—	CIE	AIE	—	—	AF
	RCR2	PEF	PES[2]	PES[1]	PES[0]	RTCEN	ADJ	RESET	START
	RCR3	ENB	—	—	—	—	—	—	—
	RCR5	—	—	—	—	—	—	—	RCKSEL
	RFRH	—	—	—	—	—	—	—	—
		—	—	—	—	—	—	—	RFC[16]
	RFRL	RFC[15]	RFC[14]	RFC[13]	RFC[12]	RFC[11]	RFC[10]	RFC[9]	RFC[8]
		RFC[7]	RFC[6]	RFC[5]	RFC[4]	RFC[3]	RFC[2]	RFC[1]	RFC[0]

chanhvinh.com

Module Name	Register Abbreviation	Bit 31/23/15/7	Bit 30/22/14/6	Bit 29/21/13/5	Bit 28/20/12/4	Bit 27/19/11/3	Bit 26/18/10/2	Bit 25/17/9/1	Bit 24/16/8/0
Serial communication interface with FIFO	SCSMR_0	—	—	—	—	—	—	—	—
		C/$\overline{A}$	CHR	PE	O/$\overline{E}$	STOP	—	CKS[1]	CKS[0]
	SCBRR_0								
	SCSCR_0	—	—	—	—	—	—	—	—
		TIE	RIE	TE	RE	REIE	—	CKE[1]	CKE[0]
	SCFTDR_0								
	SCFSR_0	PER[3]	PER[2]	PER[1]	PER[0]	FER[3]	FER[2]	FER[1]	FER[0]
		ER	TEND	TDFE	BRK	FER	PER	RDF	DR
	SCFRDR_0								
	SCFCR_0	—	—	—	—	—	RSTRG[2]	RSTRG[1]	RSTRG[0]
		RTRG[1]	RTRG[0]	TTRG[1]	TTRG[0]	MCE	TFRST	RFRST	LOOP
	SCFDR_0	—	—	—	T[4]	T[3]	T[2]	T[1]	T[0]
		—	—	—	R[4]	R[3]	R[2]	R[1]	R[0]
	SCSPTR_0	—	—	—	—	—	—	—	—
		—	—	—	—	SCKIO	SCKDT	SPB2IO	SPB2DT
	SCLSR_0	—	—	—	—	—	—	—	—
		—	—	—	—	—	—	—	ORER
	SCEMR_0	—	—	—	—	—	—	—	—
		BGDM	—	—	—	—	—	—	ABCS
	SCSMR_1	—	—	—	—	—	—	—	—
		C/$\overline{A}$	CHR	PE	O/$\overline{E}$	STOP	—	CKS[1]	CKS[0]
	SCBRR_1								
	SCSCR_1	—	—	—	—	—	—	—	—
		TIE	RIE	TE	RE	REIE	—	CKE[1]	CKE[0]
	SCFTDR_1								
	SCFSR_1	PER[3]	PER[2]	PER[1]	PER[0]	FER[3]	FER[2]	FER[1]	FER[0]
		ER	TEND	TDFE	BRK	FER	PER	RDF	DR
	SCFRDR_1								
	SCFCR_1	—	—	—	—	—	RSTRG[2]	RSTRG[1]	RSTRG[0]
		RTRG[1]	RTRG[0]	TTRG[1]	TTRG[0]	MCE	TFRST	RFRST	LOOP
	SCFDR_1	—	—	—	T[4]	T[3]	T[2]	T[1]	T[0]
		—	—	—	R[4]	R[3]	R[2]	R[1]	R[0]

chanhvinh.com

Module Name	Register Abbreviation	Bit 31/23/15/7	Bit 30/22/14/6	Bit 29/21/13/5	Bit 28/20/12/4	Bit 27/19/11/3	Bit 26/18/10/2	Bit 25/17/9/1	Bit 24/16/8/0
Serial communication interface with FIFO	SCSPTR_1	—	—	—	—	—	—	—	—
		RTSIO	RTSDT	CTSIO	CTSDT	SCKIO	SCKDT	SPB2IO	SPB2DT
	SCLSR_1	—	—	—	—	—	—	—	—
		—	—	—	—	—	—	—	ORER
	SCEMR_1	—	—	—	—	—	—	—	—
		BGDM	—	—	—	—	—	—	ABCS
	SCSMR_2	—	—	—	—	—	—	—	—
		C/$\overline{A}$	CHR	PE	O/$\overline{E}$	STOP	—	CKS[1]	CKS[0]
	SCBRR_2								
	SCSCR_2	—	—	—	—	—	—	—	—
		TIE	RIE	TE	RE	REIE	—	CKE[1]	CKE[0]
	SCFTDR_2								
	SCFSR_2	PER[3]	PER[2]	PER[1]	PER[0]	FER[3]	FER[2]	FER[1]	FER[0]
		ER	TEND	TDFE	BRK	FER	PER	RDF	DR
	SCFRDR_2								
	SCFCR_2	—	—	—	—	—	RSTRG[2]	RSTRG[1]	RSTRG[0]
		RTRG[1]	RTRG[0]	TTRG[1]	TTRG[0]	MCE	TFRST	RFRST	LOOP
	SCFDR_2	—	—	—	T[4]	T[3]	T[2]	T[1]	T[0]
		—	—	—	R[4]	R[3]	R[2]	R[1]	R[0]
	SCSPTR_2	—	—	—	—	—	—	—	—
		—	—	—	—	SCKIO	SCKDT	SPB2IO	SPB2DT
	SCLSR_2	—	—	—	—	—	—	—	—
		—	—	—	—	—	—	—	ORER
	SCEMR_2	—	—	—	—	—	—	—	—
		BGDM	—	—	—	—	—	—	ABCS
	SCSMR_3	—	—	—	—	—	—	—	—
		C/$\overline{A}$	CHR	PE	O/$\overline{E}$	STOP	—	CKS[1]	CKS[0]
	SCBRR_3								
	SCSCR_3	—	—	—	—	—	—	—	—
		TIE	RIE	TE	RE	REIE	—	CKE[1]	CKE[0]
	SCFTDR_3								

chanhvinh.com

Module Name	Register Abbreviation	Bit 31/23/15/7	Bit 30/22/14/6	Bit 29/21/13/5	Bit 28/20/12/4	Bit 27/19/11/3	Bit 26/18/10/2	Bit 25/17/9/1	Bit 24/16/8/0
Serial communication interface with FIFO	SCFSR_3	PER[3]	PER[2]	PER[1]	PER[0]	FER[3]	FER[2]	FER[1]	FER[0]
		ER	TEND	TDFE	BRK	FER	PER	RDF	DR
	SCFRDR_3								
	SCFCR_3	—	—	—	—	—	RSTRG[2]	RSTRG[1]	RSTRG[0]
		RTRG[1]	RTRG[0]	TTRG[1]	TTRG[0]	MCE	TFRST	RFRST	LOOP
	SCFDR_3	—	—	—	T[4]	T[3]	T[2]	T[1]	T[0]
		—	—	—	R[4]	R[3]	R[2]	R[1]	R[0]
	SCSPTR_3	—	—	—	—	—	—	—	—
		—	—	—	—	SCKIO	SCKDT	SPB2IO	SPB2DT
	SCLSR_3	—	—	—	—	—	—	—	—
		—	—	—	—	—	—	—	ORER
	SCEMR_3	—	—	—	—	—	—	—	—
		BGDM	—	—	—	—	—	—	ABCS
	SCSMR_4	—	—	—	—	—	—	—	—
		C/$\overline{A}$	CHR	PE	O/$\overline{E}$	STOP	—	CKS[1]	CKS[0]
	SCBRR_4								
	SCSCR_4	—	—	—	—	—	—	—	—
		TIE	RIE	TE	RE	REIE	—	CKE[1]	CKE[0]
	SCFTDR_4								
	SCFSR_4	PER[3]	PER[2]	PER[1]	PER[0]	FER[3]	FER[2]	FER[1]	FER[0]
		ER	TEND	TDFE	BRK	FER	PER	RDF	DR
	SCFRDR_4								
	SCFCR_4	—	—	—	—	—	RSTRG[2]	RSTRG[1]	RSTRG[0]
		RTRG[1]	RTRG[0]	TTRG[1]	TTRG[0]	MCE	TFRST	RFRST	LOOP
	SCFDR_4	—	—	—	T[4]	T[3]	T[2]	T[1]	T[0]
		—	—	—	R[4]	R[3]	R[2]	R[1]	R[0]
	SCSPTR_4	—	—	—	—	—	—	—	—
		—	—	—	—	SCKIO	SCKDT	SPB2IO	SPB2DT
	SCLSR_4	—	—	—	—	—	—	—	—
		—	—	—	—	—	—	—	ORER
	SCEMR_4	—	—	—	—	—	—	—	—
		BGDM	—	—	—	—	—	—	ABCS

chanhvinh.com

Module Name	Register Abbreviation	Bit 31/23/15/7	Bit 30/22/14/6	Bit 29/21/13/5	Bit 28/20/12/4	Bit 27/19/11/3	Bit 26/18/10/2	Bit 25/17/9/1	Bit 24/16/8/0
Serial communication interface with FIFO	SCSMR_5	—	—	—	—	—	—	—	—
		C/$\overline{A}$	CHR	PE	O/$\overline{E}$	STOP	—	CKS[1]	CKS[0]
	SCBRR_5								
	SCSCR_5	—	—	—	—	—	—	—	—
		TIE	RIE	TE	RE	REIE	—	CKE[1]	CKE[0]
	SCFTDR_5								
	SCFSR_5	PER[3]	PER[2]	PER[1]	PER[0]	FER[3]	FER[2]	FER[1]	FER[0]
		ER	TEND	TDFE	BRK	FER	PER	RDF	DR
	SCFRDR_5								
	SCFCR_5	—	—	—	—	—	RSTRG[2]	RSTRG[1]	RSTRG[0]
		RTRG[1]	RTRG[0]	TTRG[1]	TTRG[0]	MCE	TFRST	RFRST	LOOP
	SCFDR_5	—	—	—	T[4]	T[3]	T[2]	T[1]	T[0]
		—	—	—	R[4]	R[3]	R[2]	R[1]	R[0]
	SCSPTR_5	—	—	—	—	—	—	—	—
		RTSIO	RTSDT	CTSIO	CTSDT	SCKIO	SCKDT	SPB2IO	SPB2DT
	SCLSR_5	—	—	—	—	—	—	—	—
		—	—	—	—	—	—	—	ORER
	SCEMR_5	—	—	—	—	—	—	—	—
		BGDM	—	—	—	—	—	—	ABCS
	SCSMR_6	—	—	—	—	—	—	—	—
		C/$\overline{A}$	CHR	PE	O/$\overline{E}$	STOP	—	CKS[1]	CKS[0]
	SCBRR_6								
	SCSCR_6	—	—	—	—	—	—	—	—
		TIE	RIE	TE	RE	REIE	—	CKE[1]	CKE[0]
	SCFTDR_6								
	SCFSR_6	PER[3]	PER[2]	PER[1]	PER[0]	FER[3]	FER[2]	FER[1]	FER[0]
		ER	TEND	TDFE	BRK	FER	PER	RDF	DR
	SCFRDR_6								
	SCFCR_6	—	—	—	—	—	RSTRG[2]	RSTRG[1]	RSTRG[0]
		RTRG[1]	RTRG[0]	TTRG[1]	TTRG[0]	MCE	TFRST	RFRST	LOOP
	SCFDR_6	—	—	—	T[4]	T[3]	T[2]	T[1]	T[0]
		—	—	—	R[4]	R[3]	R[2]	R[1]	R[0]

chanhvinh.com

Module Name	Register Abbreviation	Bit 31/23/15/7	Bit 30/22/14/6	Bit 29/21/13/5	Bit 28/20/12/4	Bit 27/19/11/3	Bit 26/18/10/2	Bit 25/17/9/1	Bit 24/16/8/0
Serial communication interface with FIFO	SCSPTR_6	—	—	—	—	—	—	—	—
		—	—	—	—	SCKIO	SCKDT	SPB2IO	SPB2DT
	SCLSR_6	—	—	—	—	—	—	—	—
		—	—	—	—	—	—	—	ORER
	SCEMR_6	—	—	—	—	—	—	—	—
		BGDM	—	—	—	—	—	—	ABCS
	SCSMR_7	—	—	—	—	—	—	—	—
		C/$\overline{A}$	CHR	PE	O/$\overline{E}$	STOP	—	CKS[1]	CKS[0]
	SCBRR_7								
	SCSCR_7	—	—	—	—	—	—	—	—
		TIE	RIE	TE	RE	REIE	—	CKE[1]	CKE[0]
	SCFTDR_7								
	SCFSR_7	PER[3]	PER[2]	PER[1]	PER[0]	FER[3]	FER[2]	FER[1]	FER[0]
		ER	TEND	TDFE	BRK	FER	PER	RDF	DR
	SCFRDR_7								
	SCFCR_7	—	—	—	—	—	RSTRG[2]	RSTRG[1]	RSTRG[0]
		RTRG[1]	RTRG[0]	TTRG[1]	TTRG[0]	MCE	TFRST	RFRST	LOOP
	SCFDR_7	—	—	—	T[4]	T[3]	T[2]	T[1]	T[0]
		—	—	—	R[4]	R[3]	R[2]	R[1]	R[0]
	SCSPTR_7	—	—	—	—	—	—	—	—
		RTSIO	RTSDT	CTSIO	CTSDT	SCKIO	SCKDT	SPB2IO	SPB2DT
	SCLSR_7	—	—	—	—	—	—	—	—
		—	—	—	—	—	—	—	ORER
	SCEMR_7	—	—	—	—	—	—	—	—
		BGDM	—	—	—	—	—	—	ABCS
Renesas serial peripheral interface	SPCR_0	SPRIE	SPE	SPTIE	SPEIE	MSTR	MODFEN	—	—
	SSLP_0	—	—	—	—	—	—	—	SSL0P
	SPPCR_0	—	—	MOIFE	MOIFV	—	—	—	SPLP
	SPSR_0	SPRF	TEND	SPTEF	—	—	MODF	—	OVRF

chanhvinh.com

Module Name	Register Abbreviation	Bit 31/23/15/7	Bit 30/22/14/6	Bit 29/21/13/5	Bit 28/20/12/4	Bit 27/19/11/3	Bit 26/18/10/2	Bit 25/17/9/1	Bit 24/16/8/0
Renesas serial peripheral interface	SPDR_0	SPD31	SPD30	SPD29	SPD28	SPD27	SPD26	SPD25	SPD24
		SPD23	SPD22	SPD21	SPD20	SPD19	SPD18	SPD17	SPD16
		SPD15	SPD14	SPD13	SPD12	SPD11	SPD10	SPD9	SPD8
		SPD7	SPD6	SPD5	SPD4	SPD3	SPD2	SPD1	SPD0
	SPSCR_0	—	—	—	—	—	—	SPSLN1	SPSLN0
	SPSSR_0	—	—	—	—	—	—	SPCP1	SPCP0
	SPBR_0	SPR7	SPR6	SPR5	SPR4	SPR3	SPR2	SPR1	SPR0
	SPDCR_0	TXDMY	SPLW1	SPLW0	—	—	—	—	—
	SPCKD_0	—	—	—	—	—	SCKDL2	SCKDL1	SCKDL0
	SSLND_0	—	—	—	—	—	SLNDL2	SLNDL1	SLNDL0
	SPND_0	—	—	—	—	—	SPNDL2	SPNDL1	SPNDL0
	SPCMD_00	SCKDEN	SLNDEN	SPNDEN	LSBF	SPB3	SPB2	SPB1	SPB0
		SSLKP	—	—	—	BRDV1	BRDV0	CPOL	CPHA
	SPCMD_01	SCKDEN	SLNDEN	SPNDEN	LSBF	SPB3	SPB2	SPB1	SPB0
		SSLKP	—	—	—	BRDV1	BRDV0	CPOL	CPHA
	SPCMD_02	SCKDEN	SLNDEN	SPNDEN	LSBF	SPB3	SPB2	SPB1	SPB0
		SSLKP	—	—	—	BRDV1	BRDV0	CPOL	CPHA
	SPCMD_03	SCKDEN	SLNDEN	SPNDEN	LSBF	SPB3	SPB2	SPB1	SPB0
		SSLKP	—	—	—	BRDV1	BRDV0	CPOL	CPHA
	SPBFCR_0	TXRST	RXRST	TXTRG[1]	TXTRG[0]	—	RXTRG[2]	RXTRG[1]	RXTRG[0]
	SPBFDR_0	—	—	—	—	T[3]	T[2]	T[1]	T[0]
		—	—	R[5]	R[4]	R[3]	R[2]	R[1]	R[0]
	SPCR_1	SPRIE	SPE	SPTIE	SPEIE	MSTR	MODFEN	—	—
	SSLP_1	—	—	—	—	—	—	—	SSL0P
	SPPCR_1	—	—	MOIFE	MOIFV	—	—	—	SPLP
	SPSR_1	SPRF	TEND	SPTEF	—	—	MODF	—	OVRF
	SPDR_1	SPD31	SPD30	SPD29	SPD28	SPD27	SPD26	SPD25	SPD24
		SPD23	SPD22	SPD21	SPD20	SPD19	SPD18	SPD17	SPD16
		SPD15	SPD14	SPD13	SPD12	SPD11	SPD10	SPD9	SPD8
		SPD7	SPD6	SPD5	SPD4	SPD3	SPD2	SPD1	SPD0
	SPSCR_1	—	—	—	—	—	—	SPSLN1	SPSLN0
	SPSSR_1	—	—	—	—	—	—	SPCP1	SPCP0

chanhvinh.com

Module Name	Register Abbreviation	Bit 31/23/15/7	Bit 30/22/14/6	Bit 29/21/13/5	Bit 28/20/12/4	Bit 27/19/11/3	Bit 26/18/10/2	Bit 25/17/9/1	Bit 24/16/8/0
Renesas serial peripheral interface	SPBR_1	SPR7	SPR6	SPR5	SPR4	SPR3	SPR2	SPR1	SPR0
	SPDCR_1	TXDMY	SPLW1	SPLW0	—	—	—	—	—
	SPCKD_1	—	—	—	—	—	SCKDL2	SCKDL1	SCKDL0
	SSLND_1	—	—	—	—	—	SLNDL2	SLNDL1	SLNDL0
	SPND_1	—	—	—	—	—	SPNDL2	SPNDL1	SPNDL0
	SPCMD_10	SCKDEN	SLNDEN	SPNDEN	LSBF	SPB3	SPB2	SPB1	SPB0
		SSLKP	—	—	—	BRDV1	BRDV0	CPOL	CPHA
	SPCMD_11	SCKDEN	SLNDEN	SPNDEN	LSBF	SPB3	SPB2	SPB1	SPB0
		SSLKP	—	—	—	BRDV1	BRDV0	CPOL	CPHA
	SPCMD_12	SCKDEN	SLNDEN	SPNDEN	LSBF	SPB3	SPB2	SPB1	SPB0
		SSLKP	—	—	—	BRDV1	BRDV0	CPOL	CPHA
	SPCMD_13	SCKDEN	SLNDEN	SPNDEN	LSBF	SPB3	SPB2	SPB1	SPB0
		SSLKP	—	—	—	BRDV1	BRDV0	CPOL	CPHA
	SPBFCR_1	TXRST	RXRST	TXTRG[1]	TXTRG[0]	—	RXTRG[2]	RXTRG[1]	RXTRG[0]
	SPBFDR_1	—	—	—	—	T[3]	T[2]	T[1]	T[0]
		—	—	R[5]	R[4]	R[3]	R[2]	R[1]	R[0]
Renesas quad serial peripheral interface	SPCR_0	SPRIE	SPE	SPTIE	—	—	—	—	—
	SSLP_0	—	—	—	—	—	—	—	SSLP
	SPPCR_0	—	—	MOIFE	MOIFV	—	IO3FV	IO2FV	SPLP
	SPSR_0	SPRFF	TEND	SPTEF	—	—	—	—	—
	SPDR_0	SPD31	SPD30	SPD29	SPD28	SPD27	SPD26	SPD25	SPD24
		SPD23	SPD22	SPD21	SPD20	SPD19	SPD18	SPD17	SPD16
		SPD15	SPD14	SPD13	SPD12	SPD11	SPD10	SPD9	SPD8
		SPD7	SPD6	SPD5	SPD4	SPD3	SPD2	SPD1	SPD0
	SPSCR_0	—	—	—	—	—	—	SPSC1	SPSC0
	SPSSR_0	—	—	—	—	—	—	SPSS1	SPSS0
	SPBR_0	SPBR7	SPBR6	SPBR5	SPBR4	SPBR3	SPBR2	SPBR1	SPBR0
	SPDCR_0	TXDMY	—	—	—	—	—	—	—
	SPCKD_0	—	—	—	—	—	SCKDL2	SCKDL1	SCKDL0
	SSLND_0	—	—	—	—	—	SLNDL2	SLNDL1	SLNDL0
	SPND_0	—	—	—	—	—	SPNDL2	SPNDL1	SPNDL0

chanhvinh.com

Module Name	Register Abbreviation	Bit 31/23/15/7	Bit 30/22/14/6	Bit 29/21/13/5	Bit 28/20/12/4	Bit 27/19/11/3	Bit 26/18/10/2	Bit 25/17/9/1	Bit 24/16/8/0
Renesas quad serial peripheral interface	SPCMD0_0	SCKDEN	SLNDEN	SPNDEN	LSBF	SPB3	SPB2	SPB1	SPB0
		SSLKP	SPIMOD1	SPIMOD0	SPRW	BRDV1	BRDV0	CPOL	CPHA
	SPCMD1_0	SCKDEN	SLNDEN	SPNDEN	LSBF	SPB3	SPB2	SPB1	SPB0
		SSLKP	SPIMOD1	SPIMOD0	SPRW	BRDV1	BRDV0	CPOL	CPHA
	SPCMD2_0	SCKDEN	SLNDEN	SPNDEN	LSBF	SPB3	SPB2	SPB1	SPB0
		SSLKP	SPIMOD1	SPIMOD0	SPRW	BRDV1	BRDV0	CPOL	CPHA
	SPCMD3_0	SCKDEN	SLNDEN	SPNDEN	LSBF	SPB3	SPB2	SPB1	SPB0
		SSLKP	SPIMOD1	SPIMOD0	SPRW	BRDV1	BRDV0	CPOL	CPHA
	SPBFCR_0	TXRST	RXRST	TXTRG1	TXTRG0	—	RXTRG2	RXTRG1	RXTRG0
	SPBDCR_0	—	—	TXBC5	TXBC4	TXBC3	TXBC2	TXBC1	TXBC0
		—	—	RXBC5	RXBC4	RXBC3	RXBC2	RXBC1	RXBC0
	SPBMUL0_0	SPBMUL[31]	SPBMUL[30]	SPBMUL[29]	SPBMUL[28]	SPBMUL[27]	SPBMUL[26]	SPBMUL[25]	SPBMUL[24]
		SPBMUL[23]	SPBMUL[22]	SPBMUL[21]	SPBMUL[20]	SPBMUL[19]	SPBMUL[18]	SPBMUL[17]	SPBMUL[16]
		SPBMUL[15]	SPBMUL[14]	SPBMUL[13]	SPBMUL[12]	SPBMUL[11]	SPBMUL[10]	SPBMUL[9]	SPBMUL[8]
		SPBMUL[7]	SPBMUL[6]	SPBMUL[5]	SPBMUL[4]	SPBMUL[3]	SPBMUL[2]	SPBMUL[1]	SPBMUL[0]
	SPBMUL1_0	SPBMUL[31]	SPBMUL[30]	SPBMUL[29]	SPBMUL[28]	SPBMUL[27]	SPBMUL[26]	SPBMUL[25]	SPBMUL[24]
		SPBMUL[23]	SPBMUL[22]	SPBMUL[21]	SPBMUL[20]	SPBMUL[19]	SPBMUL[18]	SPBMUL[17]	SPBMUL[16]
		SPBMUL[15]	SPBMUL[14]	SPBMUL[13]	SPBMUL[12]	SPBMUL[11]	SPBMUL[10]	SPBMUL[9]	SPBMUL[8]
		SPBMUL[7]	SPBMUL[6]	SPBMUL[5]	SPBMUL[4]	SPBMUL[3]	SPBMUL[2]	SPBMUL[1]	SPBMUL[0]
	SPBMUL2_0	SPBMUL[31]	SPBMUL[30]	SPBMUL[29]	SPBMUL[28]	SPBMUL[27]	SPBMUL[26]	SPBMUL[25]	SPBMUL[24]
		SPBMUL[23]	SPBMUL[22]	SPBMUL[21]	SPBMUL[20]	SPBMUL[19]	SPBMUL[18]	SPBMUL[17]	SPBMUL[16]
		SPBMUL[15]	SPBMUL[14]	SPBMUL[13]	SPBMUL[12]	SPBMUL[11]	SPBMUL[10]	SPBMUL[9]	SPBMUL[8]
		SPBMUL[7]	SPBMUL[6]	SPBMUL[5]	SPBMUL[4]	SPBMUL[3]	SPBMUL[2]	SPBMUL[1]	SPBMUL[0]
	SPBMUL3_0	SPBMUL[31]	SPBMUL[30]	SPBMUL[29]	SPBMUL[28]	SPBMUL[27]	SPBMUL[26]	SPBMUL[25]	SPBMUL[24]
		SPBMUL[23]	SPBMUL[22]	SPBMUL[21]	SPBMUL[20]	SPBMUL[19]	SPBMUL[18]	SPBMUL[17]	SPBMUL[16]
		SPBMUL[15]	SPBMUL[14]	SPBMUL[13]	SPBMUL[12]	SPBMUL[11]	SPBMUL[10]	SPBMUL[9]	SPBMUL[8]
		SPBMUL[7]	SPBMUL[6]	SPBMUL[5]	SPBMUL[4]	SPBMUL[3]	SPBMUL[2]	SPBMUL[1]	SPBMUL[0]
	SPCR_1	SPRIE	SPE	SPTIE	—	—	—	—	—
	SSLP_1	—	—	—	—	—	—	—	SSLP
	SPPCR_1	—	—	MOIFE	MOIFV	—	IO3FV	IO2FV	SPLP
	SPSR_1	SPRFF	TEND	SPTEF	—	—	—	—	—

chanhvinh.com

Module Name	Register Abbreviation	Bit 31/23/15/7	Bit 30/22/14/6	Bit 29/21/13/5	Bit 28/20/12/4	Bit 27/19/11/3	Bit 26/18/10/2	Bit 25/17/9/1	Bit 24/16/8/0
Renesas quad serial peripheral interface	SPDR_1	SPD31	SPD30	SPD29	SPD28	SPD27	SPD26	SPD25	SPD24
		SPD23	SPD22	SPD21	SPD20	SPD19	SPD18	SPD17	SPD16
		SPD15	SPD14	SPD13	SPD12	SPD11	SPD10	SPD9	SPD8
		SPD7	SPD6	SPD5	SPD4	SPD3	SPD2	SPD1	SPD0
	SPSCR_1	—	—	—	—	—	—	SPSC1	SPSC0
	SPSSR_1	—	—	—	—	—	—	SPSS1	SPSS0
	SPBR_1	SPBR7	SPBR6	SPBR5	SPBR4	SPBR3	SPBR2	SPBR1	SPBR0
	SPDCR_1	TXDMY	—	—	—	—	—	—	—
	SPCKD_1	—	—	—	—	—	SCKDL2	SCKDL1	SCKDL0
	SSLND_1	—	—	—	—	—	SLNDL2	SLNDL1	SLNDL0
	SPND_1	—	—	—	—	—	SPNDL2	SPNDL1	SPNDL0
	SPCMD0_1	SCKDEN	SLNDEN	SPNDEN	LSBF	SPB3	SPB2	SPB1	SPB0
		SSLKP	SPIMOD1	SPIMOD0	SPRW	BRDV1	BRDV0	CPOL	CPHA
	SPCMD1_1	SCKDEN	SLNDEN	SPNDEN	LSBF	SPB3	SPB2	SPB1	SPB0
		SSLKP	SPIMOD1	SPIMOD0	SPRW	BRDV1	BRDV0	CPOL	CPHA
	SPCMD2_1	SCKDEN	SLNDEN	SPNDEN	LSBF	SPB3	SPB2	SPB1	SPB0
		SSLKP	SPIMOD1	SPIMOD0	SPRW	BRDV1	BRDV0	CPOL	CPHA
	SPCMD3_1	SCKDEN	SLNDEN	SPNDEN	LSBF	SPB3	SPB2	SPB1	SPB0
		SSLKP	SPIMOD1	SPIMOD0	SPRW	BRDV1	BRDV0	CPOL	CPHA
	SPBFCR_1	TXRST	RXRST	TXTRG1	TXTRG0	—	RXTRG2	RXTRG1	RXTRG0
	SPBDCR_1	—	—	TXBC5	TXBC4	TXBC3	TXBC2	TXBC1	TXBC0
		—	—	RXBC5	RXBC4	RXBC3	RXBC2	RXBC1	RXBC0
	SPBMUL0_1	SPBMUL[31]	SPBMUL[30]	SPBMUL[29]	SPBMUL[28]	SPBMUL[27]	SPBMUL[26]	SPBMUL[25]	SPBMUL[24]
		SPBMUL[23]	SPBMUL[22]	SPBMUL[21]	SPBMUL[20]	SPBMUL[19]	SPBMUL[18]	SPBMUL[17]	SPBMUL[16]
		SPBMUL[15]	SPBMUL[14]	SPBMUL[13]	SPBMUL[12]	SPBMUL[11]	SPBMUL[10]	SPBMUL[9]	SPBMUL[8]
		SPBMUL[7]	SPBMUL[6]	SPBMUL[5]	SPBMUL[4]	SPBMUL[3]	SPBMUL[2]	SPBMUL[1]	SPBMUL[0]
	SPBMUL1_1	SPBMUL[31]	SPBMUL[30]	SPBMUL[29]	SPBMUL[28]	SPBMUL[27]	SPBMUL[26]	SPBMUL[25]	SPBMUL[24]
		SPBMUL[23]	SPBMUL[22]	SPBMUL[21]	SPBMUL[20]	SPBMUL[19]	SPBMUL[18]	SPBMUL[17]	SPBMUL[16]
		SPBMUL[15]	SPBMUL[14]	SPBMUL[13]	SPBMUL[12]	SPBMUL[11]	SPBMUL[10]	SPBMUL[9]	SPBMUL[8]
		SPBMUL[7]	SPBMUL[6]	SPBMUL[5]	SPBMUL[4]	SPBMUL[3]	SPBMUL[2]	SPBMUL[1]	SPBMUL[0]

chanhvinh.com

Module Name	Register Abbreviation	Bit 31/23/15/7	Bit 30/22/14/6	Bit 29/21/13/5	Bit 28/20/12/4	Bit 27/19/11/3	Bit 26/18/10/2	Bit 25/17/9/1	Bit 24/16/8/0
Renesas quad serial peripheral interface	SPBMUL2_1	SPBMUL[31]	SPBMUL[30]	SPBMUL[29]	SPBMUL[28]	SPBMUL[27]	SPBMUL[26]	SPBMUL[25]	SPBMUL[24]
		SPBMUL[23]	SPBMUL[22]	SPBMUL[21]	SPBMUL[20]	SPBMUL[19]	SPBMUL[18]	SPBMUL[17]	SPBMUL[16]
		SPBMUL[15]	SPBMUL[14]	SPBMUL[13]	SPBMUL[12]	SPBMUL[11]	SPBMUL[10]	SPBMUL[9]	SPBMUL[8]
		SPBMUL[7]	SPBMUL[6]	SPBMUL[5]	SPBMUL[4]	SPBMUL[3]	SPBMUL[2]	SPBMUL[1]	SPBMUL[0]
	SPBMUL3_1	SPBMUL[31]	SPBMUL[30]	SPBMUL[29]	SPBMUL[28]	SPBMUL[27]	SPBMUL[26]	SPBMUL[25]	SPBMUL[24]
		SPBMUL[23]	SPBMUL[22]	SPBMUL[21]	SPBMUL[20]	SPBMUL[19]	SPBMUL[18]	SPBMUL[17]	SPBMUL[16]
		SPBMUL[15]	SPBMUL[14]	SPBMUL[13]	SPBMUL[12]	SPBMUL[11]	SPBMUL[10]	SPBMUL[9]	SPBMUL[8]
		SPBMUL[7]	SPBMUL[6]	SPBMUL[5]	SPBMUL[4]	SPBMUL[3]	SPBMUL[2]	SPBMUL[1]	SPBMUL[0]
SPI multi I/O bus controller	CMNCR	MD	—	—	—	—	—	—	—
		MOIIO3[1]	MOIIO3[0]	MOIIO2[1]	MOIIO2[0]	MOIIO1[1]	MOIIO1[0]	MOIIO0[1]	MOIIO0[0]
		IO3FV[1]	IO3FV[0]	IO2FV[1]	IO2FV[0]	—	—	IO0FV[1]	IO0FV[0]
		—	CPHAT	CPHAR	SSLP	CPOL	—	BSZ[1]	BSZ[0]
	SSLDR	—	—	—	—	—	—	—	—
		—	—	—	—	—	SPNDL[2]	SPNDL[1]	SPNDL[0]
		—	—	—	—	—	SLNDL[2]	SLNDL[1]	SLNDL[0]
		—	—	—	—	—	SCKDL[2]	SCKDL[1]	SCKDL[0]
	SPBCR	—	—	—	—	—	—	—	—
		—	—	—	—	—	—	—	—
		SPBR[7]	SPBR[6]	SPBR[5]	SPBR[4]	SPBR[3]	SPBR[2]	SPBR[1]	SPBR[0]
		—	—	—	—	—	—	BRDV[1]	BRDV[0]
	DRCR	—	—	—	—	—	—	—	—
		—	—	—	—	RBURST[3]	RBURST[2]	RBURST[1]	RBURST[0]
		—	—	—	—	—	—	RCF	RBE
		—	—	—	—	—	—	—	SSLE
	DRCMR	—	—	—	—	—	—	—	—
		CMD[7]	CMD[6]	CMD[5]	CMD[4]	CMD[3]	CMD[2]	CMD[1]	CMD[0]
		—	—	—	—	—	—	—	—
		OCMD[7]	OCMD[6]	OCMD[5]	OCMD[4]	OCMD[3]	OCMD[2]	OCMD[1]	OCMD[0]
	DREAR	—	—	—	—	—	—	—	—
		EAV[7]	EAV[6]	EAV[5]	EAV[4]	EAV[3]	EAV[2]	EAV[1]	EAV[0]
		—	—	—	—	—	—	—	—
		—	—	—	—	—	EAC[2]	EAC[1]	EAC[0]

chanhvinh.com

Module Name	Register Abbreviation	Bit 31/23/15/7	Bit 30/22/14/6	Bit 29/21/13/5	Bit 28/20/12/4	Bit 27/19/11/3	Bit 26/18/10/2	Bit 25/17/9/1	Bit 24/16/8/0
SPI multi I/O bus controller	DROPR	OPD3[7]	OPD3[6]	OPD3[5]	OPD3[4]	OPD3[3]	OPD3[2]	OPD3[1]	OPD3[0]
		OPD2[7]	OPD2[6]	OPD2[5]	OPD2[4]	OPD2[3]	OPD2[2]	OPD2[1]	OPD2[0]
		OPD1[7]	OPD1[6]	OPD1[5]	OPD1[4]	OPD1[3]	OPD1[2]	OPD1[1]	OPD1[0]
		OPD0[7]	OPD0[6]	OPD0[5]	OPD0[4]	OPD0[3]	OPD0[2]	OPD0[1]	OPD0[0]
	DRENR	CDB[1]	CDB[0]	OCDB[1]	OCDB[0]	—	—	ADB[1]	ADB[0]
		—	—	OPDB[1]	OPDB[0]	—	—	DRDB[1]	DRDB[0]
		—	CDE	—	OCDE	ADE[3]	ADE[2]	ADE[1]	ADE[0]
		OPDE[3]	OPDE[2]	OPDE[1]	OPDE[0]	—	—	—	—
	SMCR	—	—	—	—	—	—	—	—
		—	—	—	—	—	—	—	—
		—	—	—	—	—	—	—	SSLKP
		—	—	—	—	—	SPIRE	SPIWE	SPIE
	SMCMR	—	—	—	—	—	—	—	—
		CMD[7]	CMD[6]	CMD[5]	CMD[4]	CMD[3]	CMD[2]	CMD[1]	CMD[0]
		—	—	—	—	—	—	—	—
		OCMD[7]	OCMD[6]	OCMD[5]	OCMD[4]	OCMD[3]	OCMD[2]	OCMD[1]	OCMD[0]
	SMADR	ADR[31]	ADR[30]	ADR[29]	ADR[28]	ADR[27]	ADR[26]	ADR[25]	ADR[24]
		ADR[23]	ADR[22]	ADR[21]	ADR[20]	ADR[19]	ADR[18]	ADR[17]	ADR[16]
		ADR[15]	ADR[14]	ADR[13]	ADR[12]	ADR[11]	ADR[10]	ADR[9]	ADR[8]
		ADR[7]	ADR[6]	ADR[5]	ADR[4]	ADR[3]	ADR[2]	ADR[1]	ADR[0]
	SMOPR	OPD3[7]	OPD3[6]	OPD3[5]	OPD3[4]	OPD3[3]	OPD3[2]	OPD3[1]	OPD3[0]
		OPD2[7]	OPD2[6]	OPD2[5]	OPD2[4]	OPD2[3]	OPD2[2]	OPD2[1]	OPD2[0]
		OPD1[7]	OPD1[6]	OPD1[5]	OPD1[4]	OPD1[3]	OPD1[2]	OPD1[1]	OPD1[0]
		OPD0[7]	OPD0[6]	OPD0[5]	OPD0[4]	OPD0[3]	OPD0[2]	OPD0[1]	OPD0[0]
	SMENR	CDB[1]	CDB[0]	OCDB[1]	OCDB[0]	—	—	ADB[1]	ADB[0]
		—	—	OPDB[1]	OPDB[0]	—	—	SPIDB[1]	SPIDB[0]
		—	CDE	—	OCDE	ADE[3]	ADE[2]	ADE[1]	ADE[0]
		OPDE[3]	OPDE[2]	OPDE[1]	OPDE[0]	SPIDE[3]	SPIDE[2]	SPIDE[1]	SPIDE[0]
	SMRDR0	RDATA0[31]	RDATA0[30]	RDATA0[29]	RDATA0[28]	RDATA0[27]	RDATA0[26]	RDATA0[25]	RDATA0[24]
		RDATA0[23]	RDATA0[22]	RDATA0[21]	RDATA0[20]	RDATA0[19]	RDATA0[18]	RDATA0[17]	RDATA0[16]
		RDATA0[15]	RDATA0[14]	RDATA0[13]	RDATA0[12]	RDATA0[11]	RDATA0[10]	RDATA0[9]	RDATA0[8]
		RDATA0[7]	RDATA0[6]	RDATA0[5]	RDATA0[4]	RDATA0[3]	RDATA0[2]	RDATA0[1]	RDATA0[0]

chanhvinh.com

Module Name	Register Abbreviation	Bit 31/23/15/7	Bit 30/22/14/6	Bit 29/21/13/5	Bit 28/20/12/4	Bit 27/19/11/3	Bit 26/18/10/2	Bit 25/17/9/1	Bit 24/16/8/0
SPI multi I/O bus controller	SMRDR1	RDATA1[31]	RDATA1[30]	RDATA1[29]	RDATA1[28]	RDATA1[27]	RDATA1[26]	RDATA1[25]	RDATA1[24]
		RDATA1[23]	RDATA1[22]	RDATA1[21]	RDATA1[20]	RDATA1[19]	RDATA1[18]	RDATA1[17]	RDATA1[16]
		RDATA1[15]	RDATA1[14]	RDATA1[13]	RDATA1[12]	RDATA1[11]	RDATA1[10]	RDATA1[9]	RDATA1[8]
		RDATA1[7]	RDATA1[6]	RDATA1[5]	RDATA1[4]	RDATA1[3]	RDATA1[2]	RDATA1[1]	RDATA1[0]
	SMWDR0	WDATA0[31]	WDATA0[30]	WDATA0[29]	WDATA0[28]	WDATA0[27]	WDATA0[26]	WDATA0[25]	WDATA0[24]
		WDATA0[23]	WDATA0[22]	WDATA0[21]	WDATA0[20]	WDATA0[19]	WDATA0[18]	WDATA0[17]	WDATA0[16]
		WDATA0[15]	WDATA0[14]	WDATA0[13]	WDATA0[12]	WDATA0[11]	WDATA0[10]	WDATA0[9]	WDATA0[8]
		WDATA0[7]	WDATA0[6]	WDATA0[5]	WDATA0[4]	WDATA0[3]	WDATA0[2]	WDATA0[1]	WDATA0[0]
	SMWDR1	WDATA1[31]	WDATA1[30]	WDATA1[29]	WDATA1[28]	WDATA1[27]	WDATA1[26]	WDATA1[25]	WDATA1[24]
		WDATA1[23]	WDATA1[22]	WDATA1[21]	WDATA1[20]	WDATA1[19]	WDATA1[18]	WDATA1[17]	WDATA1[16]
		WDATA1[15]	WDATA1[14]	WDATA1[13]	WDATA1[12]	WDATA1[11]	WDATA1[10]	WDATA1[9]	WDATA1[8]
		WDATA1[7]	WDATA1[6]	WDATA1[5]	WDATA1[4]	WDATA1[3]	WDATA1[2]	WDATA1[1]	WDATA1[0]
	CMNSR	—	—	—	—	—	—	—	—
		—	—	—	—	—	—	—	—
		—	—	—	—	—	—	—	—
		—	—	—	—	—	—	SSLF	TEND
I^2C bus interface 3	ICCR1_0	ICE	RCVD	MST	TRS	CKS[3]	CKS[2]	CKS[1]	CKS[0]
	ICCR2_0	BBSY	SCP	SDAO	SDAOP	SCLO	—	IICRST	—
	ICMR_0	MLS	—	—	—	BCWP	BC[2]	BC[1]	BC[0]
	ICIER_0	TIE	TEIE	RIE	NAKIE	STIE	ACKE	ACKBR	ACKBT
	ICSR_0	TDRE	TEND	RDRF	NACKF	STOP	AL/OVE	AAS	ADZ
	SAR_0	SVA[6]	SVA[5]	SVA[4]	SVA[3]	SVA[2]	SVA[1]	SVA[0]	FS
	ICDRT_0								
	ICDRR_0								
	NF2CYC_0	—	—	—	—	—	—	PRS	NF2CYC
	ICCR1_1	ICE	RCVD	MST	TRS	CKS[3]	CKS[2]	CKS[1]	CKS[0]
	ICCR2_1	BBSY	SCP	SDAO	SDAOP	SCLO	—	IICRST	—
	ICMR_1	MLS	—	—	—	BCWP	BC[2]	BC[1]	BC[0]
	ICIER_1	TIE	TEIE	RIE	NAKIE	STIE	ACKE	ACKBR	ACKBT
	ICSR_1	TDRE	TEND	RDRF	NACKF	STOP	AL/OVE	AAS	ADZ
	SAR_1	SVA[6]	SVA[5]	SVA[4]	SVA[3]	SVA[2]	SVA[1]	SVA[0]	FS
	ICDRT_1								

chanhvinh.com

Module Name	Register Abbreviation	Bit 31/23/15/7	Bit 30/22/14/6	Bit 29/21/13/5	Bit 28/20/12/4	Bit 27/19/11/3	Bit 26/18/10/2	Bit 25/17/9/1	Bit 24/16/8/0
I^2C bus interface 3	ICDRR_1								
	NF2CYC_1	—	—	—	—	—	—	PRS	NF2CYC
	ICCR1_2	ICE	RCVD	MST	TRS	CKS[3]	CKS[2]	CKS[1]	CKS[0]
	ICCR2_2	BBSY	SCP	SDAO	SDAOP	SCLO	—	IICRST	—
	ICMR_2	MLS	—	—	—	BCWP	BC[2]	BC[1]	BC[0]
	ICIER_2	TIE	TEIE	RIE	NAKIE	STIE	ACKE	ACKBR	ACKBT
	ICSR_2	TDRE	TEND	RDRF	NACKF	STOP	AL/OVE	AAS	ADZ
	SAR_2	SVA[6]	SVA[5]	SVA[4]	SVA[3]	SVA[2]	SVA[1]	SVA[0]	FS
	ICDRT_2								
	ICDRR_2								
	NF2CYC_2	—	—	—	—	—	—	PRS	NF2CYC
	ICCR1_3	ICE	RCVD	MST	TRS	CKS[3]	CKS[2]	CKS[1]	CKS[0]
	ICCR2_3	BBSY	SCP	SDAO	SDAOP	SCLO	—	IICRST	—
	ICMR_3	MLS	—	—	—	BCWP	BC[2]	BC[1]	BC[0]
	ICIER_3	TIE	TEIE	RIE	NAKIE	STIE	ACKE	ACKBR	ACKBT
	ICSR_3	TDRE	TEND	RDRF	NACKF	STOP	AL/OVE	AAS	ADZ
	SAR_3	SVA[6]	SVA[5]	SVA[4]	SVA[3]	SVA[2]	SVA[1]	SVA[0]	FS
	ICDRT_3								
	ICDRR_3								
	NF2CYC_3	—	—	—	—	—	—	PRS	NF2CYC
Serial sound interface	SSICR_0	—	CKS	TUIEN	TOIEN	RUIEN	ROIEN	IIEN	—
		CHNL[1]	CHNL[0]	DWL[2]	DWL[1]	DWL[0]	SWL[2]	SWL[1]	SWL[0]
		SCKD	SWSD	SCKP	SWSP	SPDP	SDTA	PDTA	DEL
		CKDV[3]	CKDV[2]	CKDV[1]	CKDV[0]	MUEN	—	TEN	REN
	SSISR_0	—	—	TUIRQ	TOIRQ	RUIRQ	ROIRQ	IIRQ	—
		—	—	—	—	—	—	—	—
		—	—	—	—	—	—	—	—
		—	TCHNO[1]	TCHNO[0]	TSWNO	RCHNO[1]	RCHNO[0]	RSWNO	IDST
	SSIFCR_0	—	—	—	—	—	—	—	—
		—	—	—	—	—	—	—	—
		—	—	—	—	—	—	—	—
		TTRG[1]	TTRG[0]	RTRG[1]	RTRG[0]	TIE	RIE	TFRST	RFRST

chanhvinh.com

Module Name	Register Abbreviation	Bit 31/23/15/7	Bit 30/22/14/6	Bit 29/21/13/5	Bit 28/20/12/4	Bit 27/19/11/3	Bit 26/18/10/2	Bit 25/17/9/1	Bit 24/16/8/0
Serial sound interface	SSIFSR_0	—	—	—	—	TDC[3]	TDC[2]	TDC[1]	TDC[0]
		—	—	—	—	—	—	—	TDE
		—	—	—	—	RDC[3]	RDC[2]	RDC[1]	RDC[0]
		—	—	—	—	—	—	—	RDF
	SSIFTDR_0								
	SSIFRDR_0								
	SSITDMR_0	—	—	—	—	—	—	—	—
		—	—	—	—	—	—	—	—
		—	—	—	—	—	—	—	CONT
		—	—	—	—	—	—	—	TDM
	SSICR_1	—	CKS	TUIEN	TOIEN	RUIEN	ROIEN	IIEN	—
		CHNL[1]	CHNL[0]	DWL[2]	DWL[1]	DWL[0]	SWL[2]	SWL[1]	SWL[0]
		SCKD	SWSD	SCKP	SWSP	SPDP	SDTA	PDTA	DEL
		CKDV[3]	CKDV[2]	CKDV[1]	CKDV[0]	MUEN	—	TEN	REN
	SSISR_1	—	—	TUIRQ	TOIRQ	RUIRQ	ROIRQ	IIRQ	—
		—	—	—	—	—	—	—	—
		—	—	—	—	—	—	—	—
		—	TCHNO[1]	TCHNO[0]	TSWNO	RCHNO[1]	RCHNO[0]	RSWNO	IDST
	SSIFCR_1	—	—	—	—	—	—	—	—
		—	—	—	—	—	—	—	—
		—	—	—	—	—	—	—	—
		TTRG[1]	TTRG[0]	RTRG[1]	RTRG[0]	TIE	RIE	TFRST	RFRST
	SSIFSR_1	—	—	—	—	TDC[3]	TDC[2]	TDC[1]	TDC[0]
		—	—	—	—	—	—	—	TDE
		—	—	—	—	RDC[3]	RDC[2]	RDC[1]	RDC[0]
		—	—	—	—	—	—	—	RDF

chanhvinh.com

Module Name	Register Abbreviation	Bit 31/23/15/7	Bit 30/22/14/6	Bit 29/21/13/5	Bit 28/20/12/4	Bit 27/19/11/3	Bit 26/18/10/2	Bit 25/17/9/1	Bit 24/16/8/0
Serial sound interface	SSIFTDR_1								
	SSIFRDR_1								
	SSITDMR_1	—	—	—	—	—	—	—	—
		—	—	—	—	—	—	—	—
		—	—	—	—	—	—	—	CONT
		—	—	—	—	—	—	—	TDM
	SSICR_2	—	CKS	TUIEN	TOIEN	RUIEN	ROIEN	IIEN	—
		CHNL[1]	CHNL[0]	DWL[2]	DWL[1]	DWL[0]	SWL[2]	SWL[1]	SWL[0]
		SCKD	SWSD	SCKP	SWSP	SPDP	SDTA	PDTA	DEL
		CKDV[3]	CKDV[2]	CKDV[1]	CKDV[0]	MUEN	—	TEN	REN
	SSISR_2	—	—	TUIRQ	TOIRQ	RUIRQ	ROIRQ	IIRQ	—
		—	—	—	—	—	—	—	—
		—	—	—	—	—	—	—	—
		—	TCHNO[1]	TCHNO[0]	TSWNO	RCHNO[1]	RCHNO[0]	RSWNO	IDST
	SSIFCR_2	—	—	—	—	—	—	—	—
		—	—	—	—	—	—	—	—
		—	—	—	—	—	—	—	—
		TTRG[1]	TTRG[0]	RTRG[1]	RTRG[0]	TIE	RIE	TFRST	RFRST
	SSIFSR_2	—	—	—	—	TDC[3]	TDC[2]	TDC[1]	TDC[0]
		—	—	—	—	—	—	—	TDE
		—	—	—	—	RDC[3]	RDC[2]	RDC[1]	RDC[0]
		—	—	—	—	—	—	—	RDF
	SSIFTDR_2								

chanhvinh.com

Module Name	Register Abbreviation	Bit 31/23/15/7	Bit 30/22/14/6	Bit 29/21/13/5	Bit 28/20/12/4	Bit 27/19/11/3	Bit 26/18/10/2	Bit 25/17/9/1	Bit 24/16/8/0
Serial sound interface	SSIFRDR_2								
	SSITDMR_2	—	—	—	—	—	—	—	—
		—	—	—	—	—	—	—	—
		—	—	—	—	—	—	—	CONT
		—	—	—	—	—	—	—	TDM
	SSICR_3	—	CKS	TUIEN	TOIEN	RUIEN	ROIEN	IIEN	—
		CHNL[1]	CHNL[0]	DWL[2]	DWL[1]	DWL[0]	SWL[2]	SWL[1]	SWL[0]
		SCKD	SWSD	SCKP	SWSP	SPDP	SDTA	PDTA	DEL
		CKDV[3]	CKDV[2]	CKDV[1]	CKDV[0]	MUEN	—	TEN	REN
	SSISR_3	—	—	TUIRQ	TOIRQ	RUIRQ	ROIRQ	IIRQ	—
		—	—	—	—	—	—	—	—
		—	—	—	—	—	—	—	—
		—	TCHNO[1]	TCHNO[0]	TSWNO	RCHNO[1]	RCHNO[0]	RSWNO	IDST
	SSIFCR_3	—	—	—	—	—	—	—	—
		—	—	—	—	—	—	—	—
		—	—	—	—	—	—	—	—
		TTRG[1]	TTRG[0]	RTRG[1]	RTRG[0]	TIE	RIE	TFRST	RFRST
	SSIFSR_3	—	—	—	—	TDC[3]	TDC[2]	TDC[1]	TDC[0]
		—	—	—	—	—	—	—	TDE
		—	—	—	—	RDC[3]	RDC[2]	RDC[1]	RDC[0]
		—	—	—	—	—	—	—	RDF
	SSIFTDR_3								
	SSIFRDR_3								

chanhvinh.com

Module Name	Register Abbreviation	Bit 31/23/15/7	Bit 30/22/14/6	Bit 29/21/13/5	Bit 28/20/12/4	Bit 27/19/11/3	Bit 26/18/10/2	Bit 25/17/9/1	Bit 24/16/8/0
Serial sound interface	SSITDMR_3	—	—	—	—	—	—	—	—
		—	—	—	—	—	—	—	—
		—	—	—	—	—	—	—	CONT
		—	—	—	—	—	—	—	TDM
	SSICR_4	—	CKS	TUIEN	TOIEN	RUIEN	ROIEN	IIEN	—
		CHNL[1]	CHNL[0]	DWL[2]	DWL[1]	DWL[0]	SWL[2]	SWL[1]	SWL[0]
		SCKD	SWSD	SCKP	SWSP	SPDP	SDTA	PDTA	DEL
		CKDV[3]	CKDV[2]	CKDV[1]	CKDV[0]	MUEN	—	TEN	REN
	SSISR_4	—	—	TUIRQ	TOIRQ	RUIRQ	ROIRQ	IIRQ	—
		—	—	—	—	—	—	—	—
		—	—	—	—	—	—	—	—
		—	TCHNO[1]	TCHNO[0]	TSWNO	RCHNO[1]	RCHNO[0]	RSWNO	IDST
	SSIFCR_4	—	—	—	—	—	—	—	—
		—	—	—	—	—	—	—	—
		—	—	—	—	—	—	—	—
		TTRG[1]	TTRG[0]	RTRG[1]	RTRG[0]	TIE	RIE	TFRST	RFRST
	SSIFSR_4	—	—	—	—	TDC[3]	TDC[2]	TDC[1]	TDC[0]
		—	—	—	—	—	—	—	TDE
		—	—	—	—	RDC[3]	RDC[2]	RDC[1]	RDC[0]
		—	—	—	—	—	—	—	RDF
	SSIFTDR_4								
	SSIFRDR_4								
	SSITDMR_4	—	—	—	—	—	—	—	—
		—	—	—	—	—	—	—	—
		—	—	—	—	—	—	—	CONT
		—	—	—	—	—	—	—	TDM

chanhvinh.com

Module Name	Register Abbreviation	Bit 31/23/15/7	Bit 30/22/14/6	Bit 29/21/13/5	Bit 28/20/12/4	Bit 27/19/11/3	Bit 26/18/10/2	Bit 25/17/9/1	Bit 24/16/8/0
Serial sound interface	SSICR_5	—	CKS	TUIEN	TOIEN	RUIEN	ROIEN	IIEN	—
		CHNL[1]	CHNL[0]	DWL[2]	DWL[1]	DWL[0]	SWL[2]	SWL[1]	SWL[0]
		SCKD	SWSD	SCKP	SWSP	SPDP	SDTA	PDTA	DEL
		CKDV[3]	CKDV[2]	CKDV[1]	CKDV[0]	MUEN	—	TEN	REN
	SSISR_5	—	—	TUIRQ	TOIRQ	RUIRQ	ROIRQ	IIRQ	—
		—	—	—	—	—	—	—	—
		—	—	—	—	—	—	—	—
		—	TCHNO[1]	TCHNO[0]	TSWNO	RCHNO[1]	RCHNO[0]	RSWNO	IDST
	SSIFCR_5	—	—	—	—	—	—	—	—
		—	—	—	—	—	—	—	—
		—	—	—	—	—	—	—	—
		TTRG[1]	TTRG[0]	RTRG[1]	RTRG[0]	TIE	RIE	TFRST	RFRST
	SSIFSR_5	—	—	—	—	TDC[3]	TDC[2]	TDC[1]	TDC[0]
		—	—	—	—	—	—	—	TDE
		—	—	—	—	RDC[3]	RDC[2]	RDC[1]	RDC[0]
		—	—	—	—	—	—	—	RDF
	SSIFTDR_5								
	SSIFRDR_5								
	SSITDMR_5	—	—	—	—	—	—	—	—
		—	—	—	—	—	—	—	—
		—	—	—	—	—	—	—	CONT
		—	—	—	—	—	—	—	TDM
Serial I/O with FIFO	SIMDR	TRMD[1]	TRMD[0]	SYNCAT	REDG	FL[3]	FL[2]	FL[1]	FL[0]
		TXDIZ	—	SYNCAC	SYNCDL	—	—	—	—
	SISCR	MSSEL	—	—	BRPS[4]	BRPS[3]	BRPS[2]	BRPS[1]	BRPS[0]
		—	—	—	—	—	BRDV[2]	BRDV[1]	BRDV[0]

chanhvinh.com

Module Name	Register Abbreviation	Bit 31/23/15/7	Bit 30/22/14/6	Bit 29/21/13/5	Bit 28/20/12/4	Bit 27/19/11/3	Bit 26/18/10/2	Bit 25/17/9/1	Bit 24/16/8/0
Serial I/O with FIFO	SITDAR	TDLE	—	—	—	TDLA[3]	TDLA[2]	TDLA[1]	TDLA[0]
		TDRE	TLREP	—	—	TDRA[3]	TDRA[2]	TDRA[1]	TDRA[0]
	SIRDAR	RDLE	—	—	—	RDLA[3]	RDLA[2]	RDLA[1]	RDLA[0]
		RDRE	—	—	—	RDRA[3]	RDRA[2]	RDRA[1]	RDRA[0]
	SICTR	SCKE	FSE	—	—	—	—	TXE	RXE
		—	—	—	—	—	—	TXRST	RXRST
	SIFCTR	TFWM[2]	TFWM[1]	TFWM[0]	TFUA[4]	TFUA[3]	TFUA[2]	TFUA[1]	TFUA[0]
		RFWM[2]	RFWM[1]	RFWM[0]	RFUA[4]	RFUA[3]	RFUA[2]	RFUA[1]	RFUA[0]
	SISTR	—	—	TFEMP	TDREQ	—	—	RFFUL	RDREQ
		—	—	—	FSERR	TFOVF	TFUDF	RFUDF	RFOVF
	SIIER	TDMAE	—	TFEMPE	TDREQE	RDMAE	—	RFFULE	RDREQE
		—	—	—	FSERRE	TFOVFE	TFUDFE	RFUDFE	RFOVFE
	SITDR	SITDL[15]	SITDL[14]	SITDL[13]	SITDL[12]	SITDL[11]	SITDL[10]	SITDL[9]	SITDL[8]
		SITDL[7]	SITDL[6]	SITDL[5]	SITDL[4]	SITDL[3]	SITDL[2]	SITDL[1]	SITDL[0]
		SITDR[15]	SITDR[14]	SITDR[13]	SITDR[12]	SITDR[11]	SITDR[10]	SITDR[9]	SITDR[8]
		SITDR[7]	SITDR[6]	SITDR[5]	SITDR[4]	SITDR[3]	SITDR[2]	SITDR[1]	SITDR[0]
	SIRDR	SIRDL[15]	SIRDL[14]	SIRDL[13]	SIRDL[12]	SIRDL[11]	SIRDL[10]	SIRDL[9]	SIRDL[8]
		SIRDL[7]	SIRDL[6]	SIRDL[5]	SIRDL[4]	SIRDL[3]	SIRDL[2]	SIRDL[1]	SIRDL[0]
		SIRDR[15]	SIRDR[14]	SIRDR[13]	SIRDR[12]	SIRDR[11]	SIRDR[10]	SIRDR[9]	SIRDR[8]
		SIRDR[7]	SIRDR[6]	SIRDR[5]	SIRDR[4]	SIRDR[3]	SIRDR[2]	SIRDR[1]	SIRDR[0]
Controller area network	MCR_0	MCR15	MCR14	—	—	—	TST[2]	TST[1]	TST[0]
		MCR7	MCR6	MCR5	—	—	MCR2	MCR1	MCR0
	GSR_0	—	—	—	—	—	—	—	—
		—	—	GSR5	GSR4	GSR3	GSR2	GSR1	GSR0
	BCR1_0	TSG1[3]	TSG1[2]	TSG1[1]	TSG1[0]	—	TSG2[2]	TSG2[1]	TSG2[0]
		—	—	SJW[1]	SJW[0]	—	—	—	BSP
	BCR0_0	—	—	—	—	—	—	—	—
		BRP[7]	BRP[6]	BRP[5]	BRP[4]	BRP[3]	BRP[2]	BRP[1]	BRP[0]
	IRR_0	IRR15	IRR14	IRR13	IRR12	IRR11	IRR10	IRR9	IRR8
		IRR7	IRR6	IRR5	IRR4	IRR3	IRR2	IRR1	IRR0
	IMR_0	IMR15	IMR14	IMR13	IMR12	IMR11	IMR10	IMR9	IMR8
		IMR7	IMR6	IMR5	IMR4	IMR3	IMR2	IMR1	IMR0

chanhvinh.com

Module Name	Register Abbreviation	Bit 31/23/15/7	Bit 30/22/14/6	Bit 29/21/13/5	Bit 28/20/12/4	Bit 27/19/11/3	Bit 26/18/10/2	Bit 25/17/9/1	Bit 24/16/8/0
Controller area network	TEC_REC_0	TEC[7]	TEC[6]	TEC[5]	TEC[4]	TEC[3]	TEC[2]	TEC[1]	TEC[0]
		REC[7]	REC[6]	REC[5]	REC[4]	REC[3]	REC[2]	REC[1]	REC[0]
	TXPR1_0	TXPR1[15]	TXPR1[14]	TXPR1[13]	TXPR1[12]	TXPR1[11]	TXPR1[10]	TXPR1[9]	TXPR1[8]
		TXPR1[7]	TXPR1[6]	TXPR1[5]	TXPR1[4]	TXPR1[3]	TXPR1[2]	TXPR1[1]	TXPR1[0]
	TXPR0_0	TXPR0[15]	TXPR0[14]	TXPR0[13]	TXPR0[12]	TXPR0[11]	TXPR0[10]	TXPR0[9]	TXPR0[8]
		TXPR0[7]	TXPR0[6]	TXPR0[5]	TXPR0[4]	TXPR0[3]	TXPR0[2]	TXPR0[1]	—
	TXCR1_0	TXCR1[15]	TXCR1[14]	TXCR1[13]	TXCR1[12]	TXCR1[11]	TXCR1[10]	TXCR1[9]	TXCR1[8]
		TXCR1[7]	TXCR1[6]	TXCR1[5]	TXCR1[4]	TXCR1[3]	TXCR1[2]	TXCR1[1]	TXCR1[0]
	TXCR0_0	TXCR0[15]	TXCR0[14]	TXCR0[13]	TXCR0[12]	TXCR0[11]	TXCR0[10]	TXCR0[9]	TXCR0[8]
		TXCR0[7]	TXCR0[6]	TXCR0[5]	TXCR0[4]	TXCR0[3]	TXCR0[2]	TXCR0[1]	—
	TXACK1_0	TXACK1[15]	TXACK1[14]	TXACK1[13]	TXACK1[12]	TXACK1[11]	TXACK1[10]	TXACK1[9]	TXACK1[8]
		TXACK1[7]	TXACK1[6]	TXACK1[5]	TXACK1[4]	TXACK1[3]	TXACK1[2]	TXACK1[1]	TXACK1[0]
	TXACK0_0	TXACK0[15]	TXACK0[14]	TXACK0[13]	TXACK0[12]	TXACK0[11]	TXACK0[10]	TXACK0[9]	TXACK0[8]
		TXACK0[7]	TXACK0[6]	TXACK0[5]	TXACK0[4]	TXACK0[3]	TXACK0[2]	TXACK0[1]	—
	ABACK1_0	ABACK1[15]	ABACK1[14]	ABACK1[13]	ABACK1[12]	ABACK1[11]	ABACK1[10]	ABACK1[9]	ABACK1[8]
		ABACK1[7]	ABACK1[6]	ABACK1[5]	ABACK1[4]	ABACK1[3]	ABACK1[2]	ABACK1[1]	ABACK1[0]
	ABACK0_0	ABACK0[15]	ABACK0[14]	ABACK0[13]	ABACK0[12]	ABACK0[11]	ABACK0[10]	ABACK0[9]	ABACK0[8]
		ABACK0[7]	ABACK0[6]	ABACK0[5]	ABACK0[4]	ABACK0[3]	ABACK0[2]	ABACK0[1]	—
	RXPR1_0	RXPR1[15]	RXPR1[14]	RXPR1[13]	RXPR1[12]	RXPR1[11]	RXPR1[10]	RXPR1[9]	RXPR1[8]
		RXPR1[7]	RXPR1[6]	RXPR1[5]	RXPR1[4]	RXPR1[3]	RXPR1[2]	RXPR1[1]	RXPR1[0]
	RXPR0_0	RXPR0[15]	RXPR0[14]	RXPR0[13]	RXPR0[12]	RXPR0[11]	RXPR0[10]	RXPR0[9]	RXPR0[8]
		RXPR0[7]	RXPR0[6]	RXPR0[5]	RXPR0[4]	RXPR0[3]	RXPR0[2]	RXPR0[1]	RXPR0[0]
	RFPR1_0	RFPR1[15]	RFPR1[14]	RFPR1[13]	RFPR1[12]	RFPR1[11]	RFPR1[10]	RFPR1[9]	RFPR1[8]
		RFPR1[7]	RFPR1[6]	RFPR1[5]	RFPR1[4]	RFPR1[3]	RFPR1[2]	RFPR1[1]	RFPR1[0]
	RFPR0_0	RFPR0[15]	RFPR0[14]	RFPR0[13]	RFPR0[12]	RFPR0[11]	RFPR0[10]	RFPR0[9]	RFPR0[8]
		RFPR0[7]	RFPR0[6]	RFPR0[5]	RFPR0[4]	RFPR0[3]	RFPR0[2]	RFPR0[1]	RFPR0[0]
	MBIMR1_0	MBIMR1[15]	MBIMR1[14]	MBIMR1[13]	MBIMR1[12]	MBIMR1[11]	MBIMR1[10]	MBIMR1[9]	MBIMR1[8]
		MBIMR1[7]	MBIMR1[6]	MBIMR1[5]	MBIMR1[4]	MBIMR1[3]	MBIMR1[2]	MBIMR1[1]	MBIMR1[0]
	MBIMR0_0	MBIMR0[15]	MBIMR0[14]	MBIMR0[13]	MBIMR0[12]	MBIMR0[11]	MBIMR0[10]	MBIMR0[9]	MBIMR0[8]
		MBIMR0[7]	MBIMR0[6]	MBIMR0[5]	MBIMR0[4]	MBIMR0[3]	MBIMR0[2]	MBIMR0[1]	MBIMR0[0]
	UMSR1_0	UMSR1[15]	UMSR1[14]	UMSR1[13]	UMSR1[12]	UMSR1[11]	UMSR1[10]	UMSR1[9]	UMSR1[8]
		UMSR1[7]	UMSR1[6]	UMSR1[5]	UMSR1[4]	UMSR1[3]	UMSR1[2]	UMSR1[1]	UMSR1[0]

chanhvinh.com

Module Name	Register Abbreviation	Bit 31/23/15/7	Bit 30/22/14/6	Bit 29/21/13/5	Bit 28/20/12/4	Bit 27/19/11/3	Bit 26/18/10/2	Bit 25/17/9/1	Bit 24/16/8/0
Controller area network	UMSR0_0	UMSR0[15]	UMSR0[14]	UMSR0[13]	UMSR0[12]	UMSR0[11]	UMSR0[10]	UMSR0[9]	UMSR0[8]
		UMSR0[7]	UMSR0[6]	UMSR0[5]	UMSR0[4]	UMSR0[3]	UMSR0[2]	UMSR0[1]	UMSR0[0]
	TTCR0_0	TCR15	TCR14	TCR13	TCR12	TCR11	TCR10	—	—
		—	TCR6	TPSC5	TPSC4	TPSC3	TPSC2	TPSC1	TPSC0
	CMAX_TEW_0	—	—	—	—	—	CMAX[2]	CMAX[1]	CMAX[0]
		—	—	—	—	TEW[3]	TEW[2]	TEW[1]	TEW[0]
	RFTROFF_0	RFTROFF[7]	RFTROFF[6]	RFTROFF[5]	RFTROFF[4]	RFTROFF[3]	RFTROFF[2]	RFTROFF[1]	RFTROFF[0]
		—	—	—	—	—	—	—	—
	TSR_0	—	—	—	—	—	—	—	—
		—	—	—	TSR4	TSR3	TSR2	TSR1	TSR0
	CCR_0	—	—	—	—	—	—	—	—
		—	—	CCR[5]	CCR[4]	CCR[3]	CCR[2]	CCR[1]	CCR[0]
	TCNTR_0	TCNTR[15]	TCNTR[14]	TCNTR[13]	TCNTR[12]	TCNTR[11]	TCNTR[10]	TCNTR[9]	TCNTR[8]
		TCNTR[7]	TCNTR[6]	TCNTR[5]	TCNTR[4]	TCNTR[3]	TCNTR[2]	TCNTR[1]	TCNTR[0]
	CYCTR_0	CYCTR[15]	CYCTR[14]	CYCTR[13]	CYCTR[12]	CYCTR[11]	CYCTR[10]	CYCTR[9]	CYCTR[8]
		CYCTR[7]	CYCTR[6]	CYCTR[5]	CYCTR[4]	CYCTR[3]	CYCTR[2]	CYCTR[1]	CYCTR[0]
	RFMK_0	RFMK[15]	RFMK[14]	RFMK[13]	RFMK[12]	RFMK[11]	RFMK[10]	RFMK[9]	RFMK[8]
		RFMK[7]	RFMK[6]	RFMK[5]	RFMK[4]	RFMK[3]	RFMK[2]	RFMK[1]	RFMK[0]
	TCMR0_0	TCMR0[15]	TCMR0[14]	TCMR0[13]	TCMR0[12]	TCMR0[11]	TCMR0[10]	TCMR0[9]	TCMR0[8]
		TCMR0[7]	TCMR0[6]	TCMR0[5]	TCMR0[4]	TCMR0[3]	TCMR0[2]	TCMR0[1]	TCMR0[0]
	TCMR1_0	TCMR1[15]	TCMR1[14]	TCMR1[13]	TCMR1[12]	TCMR1[11]	TCMR1[10]	TCMR1[9]	TCMR1[8]
		TCMR1[7]	TCMR1[6]	TCMR1[5]	TCMR1[4]	TCMR1[3]	TCMR1[2]	TCMR1[1]	TCMR1[0]
	TCMR2_0	TCMR2[15]	TCMR2[14]	TCMR2[13]	TCMR2[12]	TCMR2[11]	TCMR2[10]	TCMR2[9]	TCMR2[8]
		TCMR2[7]	TCMR2[6]	TCMR2[5]	TCMR2[4]	TCMR2[3]	TCMR2[2]	TCMR2[1]	TCMR2[0]
	TTTSEL_0	—	TTTSEL[14]	TTTSEL[13]	TTTSEL[12]	TTTSEL[11]	TTTSEL[10]	TTTSEL[9]	TTTSEL[8]
		—	—	—	—	—	—	—	—
	MBn_CONTROL0_H_0 (n = 0 to 31)*1	—	STDID[10]	STDID[9]	STDID[8]	STDID[7]	STDID[6]	STDID[5]	STDID[4]
		STDID[3]	STDID[2]	STDID[1]	STDID[0]	RTR	IDE	EXTID[17]	EXTID[16]
	MBn_CONTROL0_H_0 (n = 0 to 31)*2	IDE	RTR	—	STDID[10]	STDID[9]	STDID[8]	STDID[7]	STDID[6]
		STDID[5]	STDID[4]	STDID[3]	STDID[2]	STDID[1]	STDID[0]	EXTID[17]	EXTID[16]

chanhvinh.com

Module Name	Register Abbreviation	Bit 31/23/15/7	Bit 30/22/14/6	Bit 29/21/13/5	Bit 28/20/12/4	Bit 27/19/11/3	Bit 26/18/10/2	Bit 25/17/9/1	Bit 24/16/8/0
Controller area network	MBn_CONTROL0_L_0 (n = 0 to 31)	EXTID[15]	EXTID[14]	EXTID[13]	EXTID[12]	EXTID[11]	EXTID[10]	EXTID[9]	EXTID[8]
		EXTID[7]	EXTID[6]	EXTID[5]	EXTID[4]	EXTID[3]	EXTID[2]	EXTID[1]	EXTID[0]
	MBn_LAFM0_0 (n = 0 to 31)*1	—	STDID_LAFM[10]	STDID_LAFM[9]	STDID_LAFM[8]	STDID_LAFM[7]	STDID_LAFM[6]	STDID_LAFM[5]	STDID_LAFM[4]
		STDID_LAFM[3]	STDID_LAFM[2]	STDID_LAFM[1]	STDID_LAFM[0]	—	IDE	EXTID_LAFM[17]	EXTID_LAFM[16]
	MBn_LAFM0_0 (n = 0 to 31)*2	IDE	—	—	STDID_LAFM[10]	STDID_LAFM[9]	STDID_LAFM[8]	STDID_LAFM[7]	STDID_LAFM[6]
		STDID_LAFM[5]	STDID_LAFM[4]	STDID_LAFM[3]	STDID_LAFM[2]	STDID_LAFM[1]	STDID_LAFM[0]	EXTID_LAFM[17]	EXTID_LAFM[16]
	MBn_LAFM1_0 (n = 0 to 31)	EXTID_LAFM[15]	EXTID_LAFM[14]	EXTID_LAFM[13]	EXTID_LAFM[12]	EXTID_LAFM[11]	EXTID_LAFM[10]	EXTID_LAFM[9]	EXTID_LAFM[8]
		EXTID_LAFM[7]	EXTID_LAFM[6]	EXTID_LAFM[5]	EXTID_LAFM[4]	EXTID_LAFM[3]	EXTID_LAFM[2]	EXTID_LAFM[1]	EXTID_LAFM[0]
	MBn_DATA_01_0 (n = 0 to 31)	MSG_DATA0	MSG_DATA0	MSG_DATA0	MSG_DATA0	MSG_DATA0	MSG_DATA0	MSG_DATA0	MSG_DATA0
		MSG_DATA1	MSG_DATA1	MSG_DATA1	MSG_DATA1	MSG_DATA1	MSG_DATA1	MSG_DATA1	MSG_DATA1
	MBn_DATA_23_0 (n = 0 to 31)	MSG_DATA2	MSG_DATA2	MSG_DATA2	MSG_DATA2	MSG_DATA2	MSG_DATA2	MSG_DATA2	MSG_DATA2
		MSG_DATA3	MSG_DATA3	MSG_DATA3	MSG_DATA3	MSG_DATA3	MSG_DATA3	MSG_DATA3	MSG_DATA3
	MBn_DATA_45_0 (n = 0 to 31)	MSG_DATA4	MSG_DATA4	MSG_DATA4	MSG_DATA4	MSG_DATA4	MSG_DATA4	MSG_DATA4	MSG_DATA4
		MSG_DATA5	MSG_DATA5	MSG_DATA5	MSG_DATA5	MSG_DATA5	MSG_DATA5	MSG_DATA5	MSG_DATA5
	MBn_DATA_67_0 (n = 0 to 31)	MSG_DATA6	MSG_DATA6	MSG_DATA6	MSG_DATA6	MSG_DATA6	MSG_DATA6	MSG_DATA6	MSG_DATA6
		MSG_DATA7	MSG_DATA7	MSG_DATA7	MSG_DATA7	MSG_DATA7	MSG_DATA7	MSG_DATA7	MSG_DATA7
	MBn_CONTROL1_0 (n = 0)	—	—	NMC	—	—	MBC[2]	MBC[1]	MBC[0]
		—	—	—	—	DLC[3]	DLC[2]	DLC[1]	DLC[0]
	MBn_CONTROL1_0 (n = 1 to 31)	—	—	NMC	ATX	DART	MBC[2]	MBC[1]	MBC[0]
		—	—	—	—	DLC[3]	DLC[2]	DLC[1]	DLC[0]
	MBn_TIMESTAMP_0 (n = 0 to 15, 30, 31)	TS15	TS14	TS13	TS12	TS11	TS10	TS9	TS8
		TS7	TS6	TS5	TS4	TS3	TS2	TS1	TS0

chanhvinh.com

Module Name	Register Abbreviation	Bit 31/23/15/7	Bit 30/22/14/6	Bit 29/21/13/5	Bit 28/20/12/4	Bit 27/19/11/3	Bit 26/18/10/2	Bit 25/17/9/1	Bit 24/16/8/0
Controller area network	MBn_TTT_0 (n = 24 to 30)	TTT15	TTT14	TTT13	TTT12	TTT11	TTT10	TTT9	TTT8
		TTT7	TTT6	TTT5	TTT4	TTT3	TTT2	TTT1	TTT0
	MBn_TTCONTROL_0 (n = 24 to 29)	TTW[1]	TTW[0]	OFFSET[5]	OFFSET[4]	OFFSET[3]	OFFSET[2]	OFFSET[1]	OFFSET[0]
		—	—	—	—	—	REP_FACTOR[2]	REP_FACTOR[1]	REP_FACTOR[0]
	MCR_1	MCR15	MCR14	—	—	—	TST[2]	TST[1]	TST[0]
		MCR7	MCR6	MCR5	—	—	MCR2	MCR1	MCR0
	GSR_1	—	—	—	—	—	—	—	—
		—	—	GSR5	GSR4	GSR3	GSR2	GSR1	GSR0
	BCR1_1	TSG1[3]	TSG1[2]	TSG1[1]	TSG1[0]	—	TSG2[2]	TSG2[1]	TSG2[0]
		—	—	SJW[1]	SJW[0]	—	—	—	BSP
	BCR0_1	—	—	—	—	—	—	—	—
		BRP[7]	BRP[6]	BRP[5]	BRP[4]	BRP[3]	BRP[2]	BRP[1]	BRP[0]
	IRR_1	IRR15	IRR14	IRR13	IRR12	IRR11	IRR10	IRR9	IRR8
		IRR7	IRR6	IRR5	IRR4	IRR3	IRR2	IRR1	IRR0
	IMR_1	IMR15	IMR14	IMR13	IMR12	IMR11	IMR10	IMR9	IMR8
		IMR7	IMR6	IMR5	IMR4	IMR3	IMR2	IMR1	IMR0
	TEC_REC_1	TEC[7]	TEC[6]	TEC[5]	TEC[4]	TEC[3]	TEC[2]	TEC[1]	TEC[0]
		REC[7]	REC[6]	REC[5]	REC[4]	REC[3]	REC[2]	REC[1]	REC[0]
	TXPR1_1	TXPR1[15]	TXPR1[14]	TXPR1[13]	TXPR1[12]	TXPR1[11]	TXPR1[10]	TXPR1[9]	TXPR1[8]
		TXPR1[7]	TXPR1[6]	TXPR1[5]	TXPR1[4]	TXPR1[3]	TXPR1[2]	TXPR1[1]	TXPR1[0]
	TXPR0_1	TXPR0[15]	TXPR0[14]	TXPR0[13]	TXPR0[12]	TXPR0[11]	TXPR0[10]	TXPR0[9]	TXPR0[8]
		TXPR0[7]	TXPR0[6]	TXPR0[5]	TXPR0[4]	TXPR0[3]	TXPR0[2]	TXPR0[1]	—
	TXCR1_1	TXCR1[15]	TXCR1[14]	TXCR1[13]	TXCR1[12]	TXCR1[11]	TXCR1[10]	TXCR1[9]	TXCR1[8]
		TXCR1[7]	TXCR1[6]	TXCR1[5]	TXCR1[4]	TXCR1[3]	TXCR1[2]	TXCR1[1]	TXCR1[0]
	TXCR0_1	TXCR0[15]	TXCR0[14]	TXCR0[13]	TXCR0[12]	TXCR0[11]	TXCR0[10]	TXCR0[9]	TXCR0[8]
		TXCR0[7]	TXCR0[6]	TXCR0[5]	TXCR0[4]	TXCR0[3]	TXCR0[2]	TXCR0[1]	—
	TXACK1_1	TXACK1[15]	TXACK1[14]	TXACK1[13]	TXACK1[12]	TXACK1[11]	TXACK1[10]	TXACK1[9]	TXACK1[8]
		TXACK1[7]	TXACK1[6]	TXACK1[5]	TXACK1[4]	TXACK1[3]	TXACK1[2]	TXACK1[1]	TXACK1[0]
	TXACK0_1	TXACK0[15]	TXACK0[14]	TXACK0[13]	TXACK0[12]	TXACK0[11]	TXACK0[10]	TXACK0[9]	TXACK0[8]
		TXACK0[7]	TXACK0[6]	TXACK0[5]	TXACK0[4]	TXACK0[3]	TXACK0[2]	TXACK0[1]	—

chanhvinh.com

Module Name	Register Abbreviation	Bit 31/23/15/7	Bit 30/22/14/6	Bit 29/21/13/5	Bit 28/20/12/4	Bit 27/19/11/3	Bit 26/18/10/2	Bit 25/17/9/1	Bit 24/16/8/0
Controller area network	ABACK1_1	ABACK1[15]	ABACK1[14]	ABACK1[13]	ABACK1[12]	ABACK1[11]	ABACK1[10]	ABACK1[9]	ABACK1[8]
		ABACK1[7]	ABACK1[6]	ABACK1[5]	ABACK1[4]	ABACK1[3]	ABACK1[2]	ABACK1[1]	ABACK1[0]
	ABACK0_1	ABACK0[15]	ABACK0[14]	ABACK0[13]	ABACK0[12]	ABACK0[11]	ABACK0[10]	ABACK0[9]	ABACK0[8]
		ABACK0[7]	ABACK0[6]	ABACK0[5]	ABACK0[4]	ABACK0[3]	ABACK0[2]	ABACK0[1]	—
	RXPR1_1	RXPR1[15]	RXPR1[14]	RXPR1[13]	RXPR1[12]	RXPR1[11]	RXPR1[10]	RXPR1[9]	RXPR1[8]
		RXPR1[7]	RXPR1[6]	RXPR1[5]	RXPR1[4]	RXPR1[3]	RXPR1[2]	RXPR1[1]	RXPR1[0]
	RXPR0_1	RXPR0[15]	RXPR0[14]	RXPR0[13]	RXPR0[12]	RXPR0[11]	RXPR0[10]	RXPR0[9]	RXPR0[8]
		RXPR0[7]	RXPR0[6]	RXPR0[5]	RXPR0[4]	RXPR0[3]	RXPR0[2]	RXPR0[1]	RXPR0[0]
	RFPR1_1	RFPR1[15]	RFPR1[14]	RFPR1[13]	RFPR1[12]	RFPR1[11]	RFPR1[10]	RFPR1[9]	RFPR1[8]
		RFPR1[7]	RFPR1[6]	RFPR1[5]	RFPR1[4]	RFPR1[3]	RFPR1[2]	RFPR1[1]	RFPR1[0]
	RFPR0_1	RFPR0[15]	RFPR0[14]	RFPR0[13]	RFPR0[12]	RFPR0[11]	RFPR0[10]	RFPR0[9]	RFPR0[8]
		RFPR0[7]	RFPR0[6]	RFPR0[5]	RFPR0[4]	RFPR0[3]	RFPR0[2]	RFPR0[1]	RFPR0[0]
	MBIMR1_1	MBIMR1[15]	MBIMR1[14]	MBIMR1[13]	MBIMR1[12]	MBIMR1[11]	MBIMR1[10]	MBIMR1[9]	MBIMR1[8]
		MBIMR1[7]	MBIMR1[6]	MBIMR1[5]	MBIMR1[4]	MBIMR1[3]	MBIMR1[2]	MBIMR1[1]	MBIMR1[0]
	MBIMR0_1	MBIMR0[15]	MBIMR0[14]	MBIMR0[13]	MBIMR0[12]	MBIMR0[11]	MBIMR0[10]	MBIMR0[9]	MBIMR0[8]
		MBIMR0[7]	MBIMR0[6]	MBIMR0[5]	MBIMR0[4]	MBIMR0[3]	MBIMR0[2]	MBIMR0[1]	MBIMR0[0]
	UMSR1_1	UMSR1[15]	UMSR1[14]	UMSR1[13]	UMSR1[12]	UMSR1[11]	UMSR1[10]	UMSR1[9]	UMSR1[8]
		UMSR1[7]	UMSR1[6]	UMSR1[5]	UMSR1[4]	UMSR1[3]	UMSR1[2]	UMSR1[1]	UMSR1[0]
	UMSR0_1	UMSR0[15]	UMSR0[14]	UMSR0[13]	UMSR0[12]	UMSR0[11]	UMSR0[10]	UMSR0[9]	UMSR0[8]
		UMSR0[7]	UMSR0[6]	UMSR0[5]	UMSR0[4]	UMSR0[3]	UMSR0[2]	UMSR0[1]	UMSR0[0]
	TTCR0_1	TCR15	TCR14	TCR13	TCR12	TCR11	TCR10	—	—
		—	TCR6	TPSC5	TPSC4	TPSC3	TPSC2	TPSC1	TPSC0
	CMAX_TEW_1	—	—	—	—	—	CMAX[2]	CMAX[1]	CMAX[0]
		—	—	—	—	TEW[3]	TEW[2]	TEW[1]	TEW[0]
	RFTROFF_1	RFTROFF[7]	RFTROFF[6]	RFTROFF[5]	RFTROFF[4]	RFTROFF[3]	RFTROFF[2]	RFTROFF[1]	RFTROFF[0]
		—	—	—	—	—	—	—	—
	TSR_1	—	—	—	—	—	—	—	—
		—	—	—	TSR4	TSR3	TSR2	TSR1	TSR0
	CCR_1	—	—	—	—	—	—	—	—
		—	—	CCR[5]	CCR[4]	CCR[3]	CCR[2]	CCR[1]	CCR[0]
	TCNTR_1	TCNTR[15]	TCNTR[14]	TCNTR[13]	TCNTR[12]	TCNTR[11]	TCNTR[10]	TCNTR[9]	TCNTR[8]
		TCNTR[7]	TCNTR[6]	TCNTR[5]	TCNTR[4]	TCNTR[3]	TCNTR[2]	TCNTR[1]	TCNTR[0]

chanhvinh.com

Module Name	Register Abbreviation	Bit 31/23/15/7	Bit 30/22/14/6	Bit 29/21/13/5	Bit 28/20/12/4	Bit 27/19/11/3	Bit 26/18/10/2	Bit 25/17/9/1	Bit 24/16/8/0
Controller area network	CYCTR_1	CYCTR[15]	CYCTR[14]	CYCTR[13]	CYCTR[12]	CYCTR[11]	CYCTR[10]	CYCTR[9]	CYCTR[8]
		CYCTR[7]	CYCTR[6]	CYCTR[5]	CYCTR[4]	CYCTR[3]	CYCTR[2]	CYCTR[1]	CYCTR[0]
	RFMK_1	RFMK[15]	RFMK[14]	RFMK[13]	RFMK[12]	RFMK[11]	RFMK[10]	RFMK[9]	RFMK[8]
		RFMK[7]	RFMK[6]	RFMK[5]	RFMK[4]	RFMK[3]	RFMK[2]	RFMK[1]	RFMK[0]
	TCMR0_1	TCMR0[15]	TCMR0[14]	TCMR0[13]	TCMR0[12]	TCMR0[11]	TCMR0[10]	TCMR0[9]	TCMR0[8]
		TCMR0[7]	TCMR0[6]	TCMR0[5]	TCMR0[4]	TCMR0[3]	TCMR0[2]	TCMR0[1]	TCMR0[0]
	TCMR1_1	TCMR1[15]	TCMR1[14]	TCMR1[13]	TCMR1[12]	TCMR1[11]	TCMR1[10]	TCMR1[9]	TCMR1[8]
		TCMR1[7]	TCMR1[6]	TCMR1[5]	TCMR1[4]	TCMR1[3]	TCMR1[2]	TCMR1[1]	TCMR1[0]
	TCMR2_1	TCMR2[15]	TCMR2[14]	TCMR2[13]	TCMR2[12]	TCMR2[11]	TCMR2[10]	TCMR2[9]	TCMR2[8]
		TCMR2[7]	TCMR2[6]	TCMR2[5]	TCMR2[4]	TCMR2[3]	TCMR2[2]	TCMR2[1]	TCMR2[0]
	TTTSEL_1	—	TTTSEL[14]	TTTSEL[13]	TTTSEL[12]	TTTSEL[11]	TTTSEL[10]	TTTSEL[9]	TTTSEL[8]
		—	—	—	—	—	—	—	—
	MBn_CONTROL0_H_1 (n = 0 to 31)*1	—	STDID[10]	STDID[9]	STDID[8]	STDID[7]	STDID[6]	STDID[5]	STDID[4]
		STDID[3]	STDID[2]	STDID[1]	STDID[0]	RTR	IDE	EXTID[17]	EXTID[16]
	MBn_CONTROL0_H_1 (n = 0 to 31)*2	IDE	RTR	—	STDID[10]	STDID[9]	STDID[8]	STDID[7]	STDID[6]
		STDID[5]	STDID[4]	STDID[3]	STDID[2]	STDID[1]	STDID[0]	EXTID[17]	EXTID[16]
	MBn_CONTROL0_L_1 (n = 0 to 31)	EXTID[15]	EXTID[14]	EXTID[13]	EXTID[12]	EXTID[11]	EXTID[10]	EXTID[9]	EXTID[8]
		EXTID[7]	EXTID[6]	EXTID[5]	EXTID[4]	EXTID[3]	EXTID[2]	EXTID[1]	EXTID[0]
	MBn_LAFM0_1 (n = 0 to 31)*1	—	STDID_LAFM[10]	STDID_LAFM[9]	STDID_LAFM[8]	STDID_LAFM[7]	STDID_LAFM[6]	STDID_LAFM[5]	STDID_LAFM[4]
		STDID_LAFM[3]	STDID_LAFM[2]	STDID_LAFM[1]	STDID_LAFM[0]	—	IDE	EXTID_LAFM[17]	EXTID_LAFM[16]
	MBn_LAFM0_1 (n = 0 to 31)*2	IDE	—	—	STDID_LAFM[10]	STDID_LAFM[9]	STDID_LAFM[8]	STDID_LAFM[7]	STDID_LAFM[6]
		STDID_LAFM[5]	STDID_LAFM[4]	STDID_LAFM[3]	STDID_LAFM[2]	STDID_LAFM[1]	STDID_LAFM[0]	EXTID_LAFM[17]	EXTID_LAFM[16]
	MBn_LAFM1_1 (n = 0 to 31)	EXTID_LAFM[15]	EXTID_LAFM[14]	EXTID_LAFM[13]	EXTID_LAFM[12]	EXTID_LAFM[11]	EXTID_LAFM[10]	EXTID_LAFM[9]	EXTID_LAFM[8]
		EXTID_LAFM[7]	EXTID_LAFM[6]	EXTID_LAFM[5]	EXTID_LAFM[4]	EXTID_LAFM[3]	EXTID_LAFM[2]	EXTID_LAFM[1]	EXTID_LAFM[0]
	MBn_DATA_01_1 (n = 0 to 31)	MSG_DATA0	MSG_DATA0	MSG_DATA0	MSG_DATA0	MSG_DATA0	MSG_DATA0	MSG_DATA0	MSG_DATA0
		MSG_DATA1	MSG_DATA1	MSG_DATA1	MSG_DATA1	MSG_DATA1	MSG_DATA1	MSG_DATA1	MSG_DATA1

chanhvinh.com

Module Name	Register Abbreviation	Bit 31/23/15/7	Bit 30/22/14/6	Bit 29/21/13/5	Bit 28/20/12/4	Bit 27/19/11/3	Bit 26/18/10/2	Bit 25/17/9/1	Bit 24/16/8/0
Controller area network	MBn_DATA_23_1 (n = 0 to 31)	MSG_DATA2	MSG_DATA2	MSG_DATA2	MSG_DATA2	MSG_DATA2	MSG_DATA2	MSG_DATA2	MSG_DATA2
		MSG_DATA3	MSG_DATA3	MSG_DATA3	MSG_DATA3	MSG_DATA3	MSG_DATA3	MSG_DATA3	MSG_DATA3
	MBn_DATA_45_1 (n = 0 to 31)	MSG_DATA4	MSG_DATA4	MSG_DATA4	MSG_DATA4	MSG_DATA4	MSG_DATA4	MSG_DATA4	MSG_DATA4
		MSG_DATA5	MSG_DATA5	MSG_DATA5	MSG_DATA5	MSG_DATA5	MSG_DATA5	MSG_DATA5	MSG_DATA5
	MBn_DATA_67_1 (n = 0 to 31)	MSG_DATA6	MSG_DATA6	MSG_DATA6	MSG_DATA6	MSG_DATA6	MSG_DATA6	MSG_DATA6	MSG_DATA6
		MSG_DATA7	MSG_DATA7	MSG_DATA7	MSG_DATA7	MSG_DATA7	MSG_DATA7	MSG_DATA7	MSG_DATA7
	MBn_CONTROL1_1 (n = 0)	—	—	NMC	—	—	MBC[2]	MBC[1]	MBC[0]
		—	—	—	—	DLC[3]	DLC[2]	DLC[1]	DLC[0]
	MBn_CONTROL1_1 (n = 1 to 31)	—	—	NMC	ATX	DART	MBC[2]	MBC[1]	MBC[0]
		—	—	—	—	DLC[3]	DLC[2]	DLC[1]	DLC[0]
	MBn_TIMESTAMP_1 (n = 0 to 15, 30, 31)	TS15	TS14	TS13	TS12	TS11	TS10	TS9	TS8
		TS7	TS6	TS5	TS4	TS3	TS2	TS1	TS0
	MBn_TTT_1 (n = 24 to 30)	TTT15	TTT14	TTT13	TTT12	TTT11	TTT10	TTT9	TTT8
		TTT7	TTT6	TTT5	TTT4	TTT3	TTT2	TTT1	TTT0
	MBn_TTCONTROL_1 (n = 24 to 29)	TTW[1]	TTW[0]	OFFSET[5]	OFFSET[4]	OFFSET[3]	OFFSET[2]	OFFSET[1]	OFFSET[0]
		—	—	—	—	—	REP_FACTOR[2]	REP_FACTOR[1]	REP_FACTOR[0]
	MCR_2	MCR15	MCR14	—	—	—	TST[2]	TST[1]	TST[0]
		MCR7	MCR6	MCR5	—	—	MCR2	MCR1	MCR0
	GSR_2	—	—	—	—	—	—	—	—
		—	—	GSR5	GSR4	GSR3	GSR2	GSR1	GSR0
	BCR1_2	TSG1[3]	TSG1[2]	TSG1[1]	TSG1[0]	—	TSG2[2]	TSG2[1]	TSG2[0]
		—	—	SJW[1]	SJW[0]	—	—	—	BSP
	BCR0_2	—	—	—	—	—	—	—	—
		BRP[7]	BRP[6]	BRP[5]	BRP[4]	BRP[3]	BRP[2]	BRP[1]	BRP[0]
	IRR_2	IRR15	IRR14	IRR13	IRR12	IRR11	IRR10	IRR9	IRR8
		IRR7	IRR6	IRR5	IRR4	IRR3	IRR2	IRR1	IRR0
	IMR_2	IMR15	IMR14	IMR13	IMR12	IMR11	IMR10	IMR9	IMR8
		IMR7	IMR6	IMR5	IMR4	IMR3	IMR2	IMR1	IMR0

chanhvinh.com

Module Name	Register Abbreviation	Bit 31/23/15/7	Bit 30/22/14/6	Bit 29/21/13/5	Bit 28/20/12/4	Bit 27/19/11/3	Bit 26/18/10/2	Bit 25/17/9/1	Bit 24/16/8/0
Controller area network	TEC_REC_2	TEC[7]	TEC[6]	TEC[5]	TEC[4]	TEC[3]	TEC[2]	TEC[1]	TEC[0]
		REC[7]	REC[6]	REC[5]	REC[4]	REC[3]	REC[2]	REC[1]	REC[0]
	TXPR1_2	TXPR1[15]	TXPR1[14]	TXPR1[13]	TXPR1[12]	TXPR1[11]	TXPR1[10]	TXPR1[9]	TXPR1[8]
		TXPR1[7]	TXPR1[6]	TXPR1[5]	TXPR1[4]	TXPR1[3]	TXPR1[2]	TXPR1[1]	TXPR1[0]
	TXPR0_2	TXPR0[15]	TXPR0[14]	TXPR0[13]	TXPR0[12]	TXPR0[11]	TXPR0[10]	TXPR0[9]	TXPR0[8]
		TXPR0[7]	TXPR0[6]	TXPR0[5]	TXPR0[4]	TXPR0[3]	TXPR0[2]	TXPR0[1]	—
	TXCR1_2	TXCR1[15]	TXCR1[14]	TXCR1[13]	TXCR1[12]	TXCR1[11]	TXCR1[10]	TXCR1[9]	TXCR1[8]
		TXCR1[7]	TXCR1[6]	TXCR1[5]	TXCR1[4]	TXCR1[3]	TXCR1[2]	TXCR1[1]	TXCR1[0]
	TXCR0_2	TXCR0[15]	TXCR0[14]	TXCR0[13]	TXCR0[12]	TXCR0[11]	TXCR0[10]	TXCR0[9]	TXCR0[8]
		TXCR0[7]	TXCR0[6]	TXCR0[5]	TXCR0[4]	TXCR0[3]	TXCR0[2]	TXCR0[1]	—
	TXACK1_2	TXACK1[15]	TXACK1[14]	TXACK1[13]	TXACK1[12]	TXACK1[11]	TXACK1[10]	TXACK1[9]	TXACK1[8]
		TXACK1[7]	TXACK1[6]	TXACK1[5]	TXACK1[4]	TXACK1[3]	TXACK1[2]	TXACK1[1]	TXACK1[0]
	TXACK0_2	TXACK0[15]	TXACK0[14]	TXACK0[13]	TXACK0[12]	TXACK0[11]	TXACK0[10]	TXACK0[9]	TXACK0[8]
		TXACK0[7]	TXACK0[6]	TXACK0[5]	TXACK0[4]	TXACK0[3]	TXACK0[2]	TXACK0[1]	—
	ABACK1_2	ABACK1[15]	ABACK1[14]	ABACK1[13]	ABACK1[12]	ABACK1[11]	ABACK1[10]	ABACK1[9]	ABACK1[8]
		ABACK1[7]	ABACK1[6]	ABACK1[5]	ABACK1[4]	ABACK1[3]	ABACK1[2]	ABACK1[1]	ABACK1[0]
	ABACK0_2	ABACK0[15]	ABACK0[14]	ABACK0[13]	ABACK0[12]	ABACK0[11]	ABACK0[10]	ABACK0[9]	ABACK0[8]
		ABACK0[7]	ABACK0[6]	ABACK0[5]	ABACK0[4]	ABACK0[3]	ABACK0[2]	ABACK0[1]	—
	RXPR1_2	RXPR1[15]	RXPR1[14]	RXPR1[13]	RXPR1[12]	RXPR1[11]	RXPR1[10]	RXPR1[9]	RXPR1[8]
		RXPR1[7]	RXPR1[6]	RXPR1[5]	RXPR1[4]	RXPR1[3]	RXPR1[2]	RXPR1[1]	RXPR1[0]
	RXPR0_2	RXPR0[15]	RXPR0[14]	RXPR0[13]	RXPR0[12]	RXPR0[11]	RXPR0[10]	RXPR0[9]	RXPR0[8]
		RXPR0[7]	RXPR0[6]	RXPR0[5]	RXPR0[4]	RXPR0[3]	RXPR0[2]	RXPR0[1]	RXPR0[0]
	RFPR1_2	RFPR1[15]	RFPR1[14]	RFPR1[13]	RFPR1[12]	RFPR1[11]	RFPR1[10]	RFPR1[9]	RFPR1[8]
		RFPR1[7]	RFPR1[6]	RFPR1[5]	RFPR1[4]	RFPR1[3]	RFPR1[2]	RFPR1[1]	RFPR1[0]
	RFPR0_2	RFPR0[15]	RFPR0[14]	RFPR0[13]	RFPR0[12]	RFPR0[11]	RFPR0[10]	RFPR0[9]	RFPR0[8]
		RFPR0[7]	RFPR0[6]	RFPR0[5]	RFPR0[4]	RFPR0[3]	RFPR0[2]	RFPR0[1]	RFPR0[0]
	MBIMR1_2	MBIMR1[15]	MBIMR1[14]	MBIMR1[13]	MBIMR1[12]	MBIMR1[11]	MBIMR1[10]	MBIMR1[9]	MBIMR1[8]
		MBIMR1[7]	MBIMR1[6]	MBIMR1[5]	MBIMR1[4]	MBIMR1[3]	MBIMR1[2]	MBIMR1[1]	MBIMR1[0]
	MBIMR0_2	MBIMR0[15]	MBIMR0[14]	MBIMR0[13]	MBIMR0[12]	MBIMR0[11]	MBIMR0[10]	MBIMR0[9]	MBIMR0[8]
		MBIMR0[7]	MBIMR0[6]	MBIMR0[5]	MBIMR0[4]	MBIMR0[3]	MBIMR0[2]	MBIMR0[1]	MBIMR0[0]
	UMSR1_2	UMSR1[15]	UMSR1[14]	UMSR1[13]	UMSR1[12]	UMSR1[11]	UMSR1[10]	UMSR1[9]	UMSR1[8]
		UMSR1[7]	UMSR1[6]	UMSR1[5]	UMSR1[4]	UMSR1[3]	UMSR1[2]	UMSR1[1]	UMSR1[0]

chanhvinh.com

Module Name	Register Abbreviation	Bit 31/23/15/7	Bit 30/22/14/6	Bit 29/21/13/5	Bit 28/20/12/4	Bit 27/19/11/3	Bit 26/18/10/2	Bit 25/17/9/1	Bit 24/16/8/0
Controller area network	UMSR0_2	UMSR0[15]	UMSR0[14]	UMSR0[13]	UMSR0[12]	UMSR0[11]	UMSR0[10]	UMSR0[9]	UMSR0[8]
		UMSR0[7]	UMSR0[6]	UMSR0[5]	UMSR0[4]	UMSR0[3]	UMSR0[2]	UMSR0[1]	UMSR0[0]
	TTCR0_2	TCR15	TCR14	TCR13	TCR12	TCR11	TCR10	—	—
		—	TCR6	TPSC5	TPSC4	TPSC3	TPSC2	TPSC1	TPSC0
	CMAX_TEW_2	—	—	—	—	—	CMAX[2]	CMAX[1]	CMAX[0]
		—	—	—	—	TEW[3]	TEW[2]	TEW[1]	TEW[0]
	RFTROFF_2	RFTROFF[7]	RFTROFF[6]	RFTROFF[5]	RFTROFF[4]	RFTROFF[3]	RFTROFF[2]	RFTROFF[1]	RFTROFF[0]
		—	—	—	—	—	—	—	—
	TSR_2	—	—	—	—	—	—	—	—
		—	—	—	TSR4	TSR3	TSR2	TSR1	TSR0
	CCR_2	—	—	—	—	—	—	—	—
		—	—	CCR[5]	CCR[4]	CCR[3]	CCR[2]	CCR[1]	CCR[0]
	TCNTR_2	TCNTR[15]	TCNTR[14]	TCNTR[13]	TCNTR[12]	TCNTR[11]	TCNTR[10]	TCNTR[9]	TCNTR[8]
		TCNTR[7]	TCNTR[6]	TCNTR[5]	TCNTR[4]	TCNTR[3]	TCNTR[2]	TCNTR[1]	TCNTR[0]
	CYCTR_2	CYCTR[15]	CYCTR[14]	CYCTR[13]	CYCTR[12]	CYCTR[11]	CYCTR[10]	CYCTR[9]	CYCTR[8]
		CYCTR[7]	CYCTR[6]	CYCTR[5]	CYCTR[4]	CYCTR[3]	CYCTR[2]	CYCTR[1]	CYCTR[0]
	RFMK_2	RFMK[15]	RFMK[14]	RFMK[13]	RFMK[12]	RFMK[11]	RFMK[10]	RFMK[9]	RFMK[8]
		RFMK[7]	RFMK[6]	RFMK[5]	RFMK[4]	RFMK[3]	RFMK[2]	RFMK[1]	RFMK[0]
	TCMR0_2	TCMR0[15]	TCMR0[14]	TCMR0[13]	TCMR0[12]	TCMR0[11]	TCMR0[10]	TCMR0[9]	TCMR0[8]
		TCMR0[7]	TCMR0[6]	TCMR0[5]	TCMR0[4]	TCMR0[3]	TCMR0[2]	TCMR0[1]	TCMR0[0]
	TCMR1_2	TCMR1[15]	TCMR1[14]	TCMR1[13]	TCMR1[12]	TCMR1[11]	TCMR1[10]	TCMR1[9]	TCMR1[8]
		TCMR1[7]	TCMR1[6]	TCMR1[5]	TCMR1[4]	TCMR1[3]	TCMR1[2]	TCMR1[1]	TCMR1[0]
	TCMR2_2	TCMR2[15]	TCMR2[14]	TCMR2[13]	TCMR2[12]	TCMR2[11]	TCMR2[10]	TCMR2[9]	TCMR2[8]
		TCMR2[7]	TCMR2[6]	TCMR2[5]	TCMR2[4]	TCMR2[3]	TCMR2[2]	TCMR2[1]	TCMR2[0]
	TTTSEL_2	—	TTTSEL[14]	TTTSEL[13]	TTTSEL[12]	TTTSEL[11]	TTTSEL[10]	TTTSEL[9]	TTTSEL[8]
		—	—	—	—	—	—	—	—
	MBn_CONTROL0_H_2 (n = 0 to 31)*1	—	STDID[10]	STDID[9]	STDID[8]	STDID[7]	STDID[6]	STDID[5]	STDID[4]
		STDID[3]	STDID[2]	STDID[1]	STDID[0]	RTR	IDE	EXTID[17]	EXTID[16]
	MBn_CONTROL0_H_2 (n = 0 to 31)*2	IDE	RTR	—	STDID[10]	STDID[9]	STDID[8]	STDID[7]	STDID[6]
		STDID[5]	STDID[4]	STDID[3]	STDID[2]	STDID[1]	STDID[0]	EXTID[17]	EXTID[16]

chanhvinh.com

Module Name	Register Abbreviation	Bit 31/23/15/7	Bit 30/22/14/6	Bit 29/21/13/5	Bit 28/20/12/4	Bit 27/19/11/3	Bit 26/18/10/2	Bit 25/17/9/1	Bit 24/16/8/0
Controller area network	MBn_CONTROL0_L_2 (n = 0 to 31)	EXTID[15]	EXTID[14]	EXTID[13]	EXTID[12]	EXTID[11]	EXTID[10]	EXTID[9]	EXTID[8]
		EXTID[7]	EXTID[6]	EXTID[5]	EXTID[4]	EXTID[3]	EXTID[2]	EXTID[1]	EXTID[0]
	MBn_LAFM0_2 (n = 0 to 31)*1	—	STDID_LAFM[10]	STDID_LAFM[9]	STDID_LAFM[8]	STDID_LAFM[7]	STDID_LAFM[6]	STDID_LAFM[5]	STDID_LAFM[4]
		STDID_LAFM[3]	STDID_LAFM[2]	STDID_LAFM[1]	STDID_LAFM[0]	—	IDE	EXTID_LAFM[17]	EXTID_LAFM[16]
	MBn_LAFM0_2 (n = 0 to 31)*2	IDE	—	—	STDID_LAFM[10]	STDID_LAFM[9]	STDID_LAFM[8]	STDID_LAFM[7]	STDID_LAFM[6]
		STDID_LAFM[5]	STDID_LAFM[4]	STDID_LAFM[3]	STDID_LAFM[2]	STDID_LAFM[1]	STDID_LAFM[0]	EXTID_LAFM[17]	EXTID_LAFM[16]
	MBn_LAFM1_2 (n = 0 to 31)	EXTID_LAFM[15]	EXTID_LAFM[14]	EXTID_LAFM[13]	EXTID_LAFM[12]	EXTID_LAFM[11]	EXTID_LAFM[10]	EXTID_LAFM[9]	EXTID_LAFM[8]
		EXTID_LAFM[7]	EXTID_LAFM[6]	EXTID_LAFM[5]	EXTID_LAFM[4]	EXTID_LAFM[3]	EXTID_LAFM[2]	EXTID_LAFM[1]	EXTID_LAFM[0]
	MBn_DATA_01_2 (n = 0 to 31)	MSG_DATA0	MSG_DATA0	MSG_DATA0	MSG_DATA0	MSG_DATA0	MSG_DATA0	MSG_DATA0	MSG_DATA0
		MSG_DATA1	MSG_DATA1	MSG_DATA1	MSG_DATA1	MSG_DATA1	MSG_DATA1	MSG_DATA1	MSG_DATA1
	MBn_DATA_23_2 (n = 0 to 31)	MSG_DATA2	MSG_DATA2	MSG_DATA2	MSG_DATA2	MSG_DATA2	MSG_DATA2	MSG_DATA2	MSG_DATA2
		MSG_DATA3	MSG_DATA3	MSG_DATA3	MSG_DATA3	MSG_DATA3	MSG_DATA3	MSG_DATA3	MSG_DATA3
	MBn_DATA_45_2 (n = 0 to 31)	MSG_DATA4	MSG_DATA4	MSG_DATA4	MSG_DATA4	MSG_DATA4	MSG_DATA4	MSG_DATA4	MSG_DATA4
		MSG_DATA5	MSG_DATA5	MSG_DATA5	MSG_DATA5	MSG_DATA5	MSG_DATA5	MSG_DATA5	MSG_DATA5
	MBn_DATA_67_2 (n = 0 to 31)	MSG_DATA6	MSG_DATA6	MSG_DATA6	MSG_DATA6	MSG_DATA6	MSG_DATA6	MSG_DATA6	MSG_DATA6
		MSG_DATA7	MSG_DATA7	MSG_DATA7	MSG_DATA7	MSG_DATA7	MSG_DATA7	MSG_DATA7	MSG_DATA7
	MBn_CONTROL1_2 (n = 0)	—	—	NMC	—	—	MBC[2]	MBC[1]	MBC[0]
		—	—	—	—	DLC[3]	DLC[2]	DLC[1]	DLC[0]
	MBn_CONTROL1_2 (n = 1 to 31)	—	—	NMC	ATX	DART	MBC[2]	MBC[1]	MBC[0]
		—	—	—	—	DLC[3]	DLC[2]	DLC[1]	DLC[0]
	MBn_TIMESTAMP_2 (n = 0 to 15, 30, 31)	TS15	TS14	TS13	TS12	TS11	TS10	TS9	TS8
		TS7	TS6	TS5	TS4	TS3	TS2	TS1	TS0

chanhvinh.com

Module Name	Register Abbreviation	Bit 31/23/15/7	Bit 30/22/14/6	Bit 29/21/13/5	Bit 28/20/12/4	Bit 27/19/11/3	Bit 26/18/10/2	Bit 25/17/9/1	Bit 24/16/8/0
Controller area network	MBn_TTT_2 (n = 24 to 30)	TTT15	TTT14	TTT13	TTT12	TTT11	TTT10	TTT9	TTT8
		TTT7	TTT6	TTT5	TTT4	TTT3	TTT2	TTT1	TTT0
	MBn_TT CONTROL_2 (n = 24 to 29)	TTW[1]	TTW[0]	OFFSET[5]	OFFSET[4]	OFFSET[3]	OFFSET[2]	OFFSET[1]	OFFSET[0]
		—	—	—	—	—	REP_FACTOR[2]	REP_FACTOR[1]	REP_FACTOR[0]
IEBus™ controller	IECTR	—	IOL	DEE	—	RE	—	—	—
	IECMR	—	—	—	—	—	CMD[2]	CMD[1]	CMD[0]
	IEMCR	SS	RN[2]	RN[1]	RN[0]	CTL[3]	CTL[2]	CTL[1]	CTL[0]
	IEAR1	IARL4[3]	IARL4[2]	IARL4[1]	IARL4[0]	IMD[1]	IMD[0]	—	STE
	IEAR2	IARU8[7]	IARU8[6]	IARU8[5]	IARU8[4]	IARU8[3]	IARU8[2]	IARU8[1]	IARU8[0]
	IESA1	ISAL4[3]	ISAL4[2]	ISAL4[1]	ISAL4[0]	—	—	—	—
	IESA2	ISAU8[7]	ISAU8[6]	ISAU8[5]	ISAU8[4]	ISAU8[3]	ISAU8[2]	ISAU8[1]	ISAU8[0]
	IETBFL	IBFL[7]	IBFL[6]	IBFL[5]	IBFL[4]	IBFL[3]	IBFL[2]	IBFL[1]	IBFL[0]
	IEMA1	IMAL4[3]	IMAL4[2]	IMAL4[1]	IMAL4[0]	—	—	—	—
	IEMA2	IMAU8[7]	IMAU8[6]	IMAU8[5]	IMAU8[4]	IMAU8[3]	IMAU8[2]	IMAU8[1]	IMAU8[0]
	IERCTL	—	—	—	—	RCTL[3]	RCTL[2]	RCTL[1]	RCTL[0]
	IERBFL	RBFL[7]	RBFL[6]	RBFL[5]	RBFL[4]	RBFL[3]	RBFL[2]	RBFL[1]	RBFL[0]
	IELA1	ILAL8[7]	ILAL8[6]	ILAL8[5]	ILAL8[4]	ILAL8[3]	ILAL8[2]	ILAL8[1]	ILAL8[0]
	IELA2	—	—	—	—	ILAU4[3]	ILAU4[2]	ILAU4[1]	ILAU4[0]
	IEFLG	CMX	MRQ	SRQ	SRE	LCK	—	RSS	GG
	IETSR	—	TXS	TXF	—	TXEAL	TXETTME	TXERO	TXEACK
	IEIET	—	TXSE	TXFE	—	TXEALE	TXETTMEE	TXEROE	TXEACKE
	IERSR	RXBSY	RXS	RXF	RXEDE	RXEOVE	RXERTME	RXEDLE	RXEPE
	IEIER	RXBSYE	RXSE	RXFE	RXEDEE	RXEOVEE	RXERTMEE	RXEDLEE	RXEPEE
	IECKSR	—	—	—	CKS3	—	CKS[2]	CKS[1]	CKS[0]
	IETB001 to IETB128								
	IERB001 to IERB128								
Renesas SPDIF interface	TLCA	—	—	—	—	—	—	—	—

chanhvinh.com

Module Name	Register Abbreviation	Bit 31/23/15/7	Bit 30/22/14/6	Bit 29/21/13/5	Bit 28/20/12/4	Bit 27/19/11/3	Bit 26/18/10/2	Bit 25/17/9/1	Bit 24/16/8/0
Renesas SPDIF interface	TRCA	—	—	—	—	—	—	—	—
	TLCS	—	—	CLAC[1]	CLAC[0]	FS[3]	FS[2]	FS[1]	FS[0]
		CHNO[3]	CHNO[2]	CHNO[1]	CHNO[0]	SRCNO[3]	SRCNO[2]	SRCNO[1]	SRCNO[0]
		CATCD[7]	CATCD[6]	CATCD[5]	CATCD[4]	CATCD[3]	CATCD[2]	CATCD[1]	CATCD[0]
		—	—	CTL[4]	CTL[3]	CTL[2]	CTL[1]	CTL[0]	—
	TRCS	—	—	CLAC[1]	CLAC[0]	FS[3]	FS[2]	FS[1]	FS[0]
		CHNO[3]	CHNO[2]	CHNO[1]	CHNO[0]	SRCNO[3]	SRCNO[2]	SRCNO[1]	SRCNO[0]
		CATCD[7]	CATCD[6]	CATCD[5]	CATCD[4]	CATCD[3]	CATCD[2]	CATCD[1]	CATCD[0]
		—	—	CTL[4]	CTL[3]	CTL[2]	CTL[1]	CTL[0]	—
	TUI								
	RLCA	—	—	—	—	—	—	—	—
	RRCA	—	—	—	—	—	—	—	—
	RLCS	—	—	CLAC[1]	CLAC[0]	FS[3]	FS[2]	FS[1]	FS[0]
		CHNO[3]	CHNO[2]	CHNO[1]	CHNO[0]	SRCNO[3]	SRCNO[2]	SRCNO[1]	SRCNO[0]
		CATCD[7]	CATCD[6]	CATCD[5]	CATCD[4]	CATCD[3]	CATCD[2]	CATCD[1]	CATCD[0]
				CTL[4]	CTL[3]	CTL[2]	CTL[1]	CTL[0]	
	RRCS	—	—	CLAC[1]	CLAC[0]	FS[3]	FS[2]	FS[1]	FS[0]
		CHNO[3]	CHNO[2]	CHNO[1]	CHNO[0]	SRCNO[3]	SRCNO[2]	SRCNO[1]	SRCNO[0]
		CATCD[7]	CATCD[6]	CATCD[5]	CATCD[4]	CATCD[3]	CATCD[2]	CATCD[1]	CATCD[0]
				CTL[4]	CTL[3]	CTL[2]	CTL[1]	CTL[0]	

chanhvinh.com

Module Name	Register Abbreviation	Bit 31/23/15/7	Bit 30/22/14/6	Bit 29/21/13/5	Bit 28/20/12/4	Bit 27/19/11/3	Bit 26/18/10/2	Bit 25/17/9/1	Bit 24/16/8/0
Renesas SPDIF interface	RUI								
	CTRL	—	—	—	CKS	—	PB	RASS[1]	RASS[0]
		TASS[1]	TASS[0]	RDE	TDE	NCSI	AOS	RME	TME
		REIE	TEIE	UBOI	UBUI	CREI	PAEI	PREI	CSEI
		ABOI	ABUI	RUII	TUII	RCSI	RCBI	TCSI	TCBI
	STAT	—	—	—	—	—	—	—	—
		—	—	—	—	—	—	—	CMD
		RIS	TIS	UBO	UBU	CE	PARE	PREE	CSE
		ABO	ABU	RUIR	TUIR	CSRX	CBRX	CSTX	CBTX
	TDAD	—	—	—	—	—	—	—	—
	RDAD	—	—	—	—	—	—	—	—
CD-ROM decoder	CROMEN	SUBC_EN	CROM_EN	CROM_STP	—	—	—	—	—
	CROMSY0	SY_AUT	SY_IEN	SY_DEN	—	—	—	—	—
	CROMCTL0	MD_DESC	—	MD_AUTO	MD_AUTOS1	MD_AUTOS2	MD_SEC[2]	MD_SEC[1]	MD_SEC[0]
	CROMCTL1	M2F2EDC	MD_DEC[2]	MD_DEC[1]	MD_DEC[0]	—	—	MD_ PQREP[1]	MD_ PQREP[0]
	CROMCTL3	STP_ECC	STP_EDC	—	STP_MD	STP_MIN	—	—	—
	CROMCTL4	LINKOFF	LINK2	—	EROSEL	NO_ECC	—	—	—
	CROMCTL5	—	—	—	—	—	—		MSF_LBA_ SEL
	CROMST0	—	—	ST_SYIL	ST_SYNO	ST_BLKS	ST_BLKL	ST_SECS	ST_SECL
	CROMST1	—	—	—	—	ER2_HEAD0	ER2_HEAD1	ER2_HEAD2	ER2_HEAD3
	CROMST3	ER2_SHEAD0	ER2_SHEAD1	ER2_SHEAD2	ER2_SHEAD3	ER2_SHEAD4	ER2_SHEAD5	ER2_SHEAD6	ER2_SHEAD7

chanhvinh.com

Module Name	Register Abbreviation	Bit 31/23/15/7	Bit 30/22/14/6	Bit 29/21/13/5	Bit 28/20/12/4	Bit 27/19/11/3	Bit 26/18/10/2	Bit 25/17/9/1	Bit 24/16/8/0
CD-ROM decoder	CROMST4	NG_MD	NG_MDCMP1	NG_MDCMP2	NG_MDCMP3	NG_MDCMP4	NG_MDDEF	NG_MDTIM1	NG_MDTIM2
	CROMST5	ST_AMD[2]	ST_AMD[1]	ST_AMD[0]	ST_MDX	LINK_ON	LINK_DET	LINK_SDET	LINK_OUT1
	CROMST6	ST_ERR	—	ST_ECCABT	ST_ECCNG	ST_ECCP	ST_ECCQ	ST_EDC1	ST_EDC2
	CBUFST0	BUF_REF	BUF_ACT	—	—	—	—	—	—
	CBUFST1	BUF_ECC	BUF_EDC	—	BUF_MD	BUF_MIN	—	—	—
	CBUFST2	BUF_NG	—	—	—	—	—	—	—
	HEAD00	HEAD00[7]	HEAD00[6]	HEAD00[5]	HEAD00[4]	HEAD00[3]	HEAD00[2]	HEAD00[1]	HEAD00[0]
	HEAD01	HEAD01[7]	HEAD01[6]	HEAD01[5]	HEAD01[4]	HEAD01[3]	HEAD01[2]	HEAD01[1]	HEAD01[0]
	HEAD02	HEAD02[7]	HEAD02[6]	HEAD02[5]	HEAD02[4]	HEAD02[3]	HEAD02[2]	HEAD02[1]	HEAD02[0]
	HEAD03	HEAD03[7]	HEAD03[6]	HEAD03[5]	HEAD03[4]	HEAD03[3]	HEAD03[2]	HEAD03[1]	HEAD03[0]
	SHEAD00	SHEAD00[7]	SHEAD00[6]	SHEAD00[5]	SHEAD00[4]	SHEAD00[3]	SHEAD00[2]	SHEAD00[1]	SHEAD00[0]
	SHEAD01	SHEAD01[7]	SHEAD01[6]	SHEAD01[5]	SHEAD01[4]	SHEAD01[3]	SHEAD01[2]	SHEAD01[1]	SHEAD01[0]
	SHEAD02	SHEAD02[7]	SHEAD02[6]	SHEAD02[5]	SHEAD02[4]	SHEAD02[3]	SHEAD02[2]	SHEAD02[1]	SHEAD02[0]
	SHEAD03	SHEAD03[7]	SHEAD03[6]	SHEAD03[5]	SHEAD03[4]	SHEAD03[3]	SHEAD03[2]	SHEAD03[1]	SHEAD03[0]
	SHEAD04	SHEAD04[7]	SHEAD04[6]	SHEAD04[5]	SHEAD04[4]	SHEAD04[3]	SHEAD04[2]	SHEAD04[1]	SHEAD04[0]
	SHEAD05	SHEAD05[7]	SHEAD05[6]	SHEAD05[5]	SHEAD05[4]	SHEAD05[3]	SHEAD05[2]	SHEAD05[1]	SHEAD05[0]
	SHEAD06	SHEAD06[7]	SHEAD06[6]	SHEAD06[5]	SHEAD06[4]	SHEAD06[3]	SHEAD06[2]	SHEAD06[1]	SHEAD06[0]
	SHEAD07	SHEAD07[7]	SHEAD07[6]	SHEAD07[5]	SHEAD07[4]	SHEAD07[3]	SHEAD07[2]	SHEAD07[1]	SHEAD07[0]
	HEAD20	HEAD20[7]	HEAD20[6]	HEAD20[5]	HEAD20[4]	HEAD20[3]	HEAD20[2]	HEAD20[1]	HEAD20[0]
	HEAD21	HEAD21[7]	HEAD21[6]	HEAD21[5]	HEAD21[4]	HEAD21[3]	HEAD21[2]	HEAD21[1]	HEAD21[0]
	HEAD22	HEAD22[7]	HEAD22[6]	HEAD22[5]	HEAD22[4]	HEAD22[3]	HEAD22[2]	HEAD22[1]	HEAD22[0]
	HEAD23	HEAD23[7]	HEAD23[6]	HEAD23[5]	HEAD23[4]	HEAD23[3]	HEAD23[2]	HEAD23[1]	HEAD23[0]
	SHEAD20	SHEAD20[7]	SHEAD20[6]	SHEAD20[5]	SHEAD20[4]	SHEAD20[3]	SHEAD20[2]	SHEAD20[1]	SHEAD20[0]
	SHEAD21	SHEAD21[7]	SHEAD21[6]	SHEAD21[5]	SHEAD21[4]	SHEAD21[3]	SHEAD21[2]	SHEAD21[1]	SHEAD21[0]
	SHEAD22	SHEAD22[7]	SHEAD22[6]	SHEAD22[5]	SHEAD22[4]	SHEAD22[3]	SHEAD22[2]	SHEAD22[1]	SHEAD22[0]
	SHEAD23	SHEAD23[7]	SHEAD23[6]	SHEAD23[5]	SHEAD23[4]	SHEAD23[3]	SHEAD23[2]	SHEAD23[1]	SHEAD23[0]
	SHEAD24	SHEAD24[7]	SHEAD24[6]	SHEAD24[5]	SHEAD24[4]	SHEAD24[3]	SHEAD24[2]	SHEAD24[1]	SHEAD24[0]
	SHEAD25	SHEAD25[7]	SHEAD25[6]	SHEAD25[5]	SHEAD25[4]	SHEAD25[3]	SHEAD25[2]	SHEAD25[1]	SHEAD25[0]
	SHEAD26	SHEAD26[7]	SHEAD26[6]	SHEAD26[5]	SHEAD26[4]	SHEAD26[3]	SHEAD26[2]	SHEAD26[1]	SHEAD26[0]
	SHEAD27	SHEAD27[7]	SHEAD27[6]	SHEAD27[5]	SHEAD27[4]	SHEAD27[3]	SHEAD27[2]	SHEAD27[1]	SHEAD27[0]
	CBUFCTL0	CBUF_AUT	CBUF_EN	CBUF_LINK	CBUF_MD[1]	CBUF_MD[0]	CBUF_TS	CBUF_Q	—
	CBUFCTL1	BS_MIN[7]	BS_MIN[6]	BS_MIN[5]	BS_MIN[4]	BS_MIN[3]	BS_MIN[2]	BS_MIN[1]	BS_MIN[0]

chanhvinh.com

Module Name	Register Abbreviation	Bit 31/23/15/7	Bit 30/22/14/6	Bit 29/21/13/5	Bit 28/20/12/4	Bit 27/19/11/3	Bit 26/18/10/2	Bit 25/17/9/1	Bit 24/16/8/0
CD-ROM decoder	CBUFCTL2	BS_SEC[7]	BS_SEC[6]	BS_SEC[5]	BS_SEC[4]	BS_SEC[3]	BS_SEC[2]	BS_SEC[1]	BS_SEC[0]
	CBUFCTL3	BS_FRM[7]	BS_FRM[6]	BS_FRM[5]	BS_FRM[4]	BS_FRM[3]	BS_FRM[2]	BS_FRM[1]	BS_FRM[0]
	CROMST0M	—	—	ST_SYILM	ST_SYNOM	ST_BLKSM	ST_BLKLM	ST_SECSM	ST_SECLM
	ROMDECRST	LOGICRST	RAMRST	—	—	—	—	—	—
	RSTSTAT	RAMCLRST	—	—	—	—	—	—	—
	SSI	BYTEND	BITEND	BUFEND0[1]	BUFEND0[0]	BUFEND1[1]	BUFEND1[0]	—	—
	INTHOLD	ISEC	ITARG	ISY	IERR	IBUF	IREADY	—	—
	INHINT	INHISEC	INHITARG	INHISY	INHIERR	INHIBUF	INHIREADY	PRE INHREQDM	PRE INHIREADY
	STRMDIN0	STRMDIN[31]	STRMDIN[30]	STRMDIN[29]	STRMDIN[28]	STRMDIN[27]	STRMDIN[26]	STRMDIN[25]	STRMDIN[24]
		STRMDIN[23]	STRMDIN[22]	STRMDIN[21]	STRMDIN[20]	STRMDIN[19]	STRMDIN[18]	STRMDIN[17]	STRMDIN[16]
	STRMDIN2	STRMDIN[15]	STRMDIN[14]	STRMDIN[13]	STRMDIN[12]	STRMDIN[11]	STRMDIN[10]	STRMDIN[9]	STRMDIN[8]
		STRMDIN[7]	STRMDIN[6]	STRMDIN[5]	STRMDIN[4]	STRMDIN[3]	STRMDIN[2]	STRMDIN[1]	STRMDIN[0]
	STRMDOUT0	STRMDOUT [15]	STRMDOUT [14]	STRMDOUT [13]	STRMDOUT [12]	STRMDOUT [11]	STRMDOUT [10]	STRMDOUT [9]	STRMDOUT [8]
		STRMDOUT [7]	STRMDOUT [6]	STRMDOUT [5]	STRMDOUT [4]	STRMDOUT [3]	STRMDOUT [2]	STRMDOUT 1]	STRMDOUT [0]
A/D converter	ADDRA								
				—	—	—	—	—	—
	ADDRB								
				—	—	—	—	—	—
	ADDRC								
				—	—	—	—	—	—
	ADDRD								
				—	—	—	—	—	—
	ADDRE								
				—	—	—	—	—	—
	ADDRF								
				—	—	—	—	—	—
	ADDRG								
				—	—	—	—	—	—
	ADDRH								
				—	—	—	—	—	—

chanhvinh.com

Module Name	Register Abbreviation	Bit 31/23/15/7	Bit 30/22/14/6	Bit 29/21/13/5	Bit 28/20/12/4	Bit 27/19/11/3	Bit 26/18/10/2	Bit 25/17/9/1	Bit 24/16/8/0
A/D converter	ADCSR	ADF	ADIE	ADST	TRGS[3]	TRGS[2]	TRGS[1]	TRGS[0]	CKS[2]
		CKS[1]	CKS[0]	MDS[2]	MDS[1]	MDS[0]	CH[2]	CH[1]	CH[0]
NAND flash memory controller	FLCMNCR	—	—	—	—	—	—	—	—
		—	—	BUSYON	—	—	SNAND	QTSEL	—
		—	—	—	—	ACM[1]	ACM[0]	NANDWF	—
		—	—	—	—	CE	—	—	—
	FLCMDCR	ADRCNT2	SCTCNT[19]	SCTCNT[18]	SCTCNT[17]	SCTCNT[16]	ADRMD	CDSRC	DOSR
		—	—	SELRW	DOADR	ADRCNT[1]	ADRCNT[0]	DOCMD2	DOCMD1
		SCTCNT[15]	SCTCNT[14]	SCTCNT[13]	SCTCNT[12]	SCTCNT[11]	SCTCNT[10]	SCTCNT[9]	SCTCNT[8]
		SCTCNT[7]	SCTCNT[6]	SCTCNT[5]	SCTCNT[4]	SCTCNT[3]	SCTCNT[2]	SCTCNT[1]	SCTCNT[0]
	FLCMCDR	—	—	—	—	—	—	—	—
		—	—	—	—	—	—	—	—
		CMD2[7]	CMD2[6]	CMD2[5]	CMD2[4]	CMD2[3]	CMD2[2]	CMD2[1]	CMD2[0]
		CMD1[7]	CMD1[6]	CMD1[5]	CMD1[4]	CMD1[3]	CMD1[2]	CMD1[1]	CMD1[0]
	FLADR*3	ADR4[7]	ADR4[6]	ADR4[5]	ADR4[4]	ADR4[3]	ADR4[2]	ADR4[1]	ADR4[0]
		ADR3[7]	ADR3[6]	ADR3[5]	ADR3[4]	ADR3[3]	ADR3[2]	ADR3[1]	ADR3[0]
		ADR2[7]	ADR2[6]	ADR2[5]	ADR2[4]	ADR2[3]	ADR2[2]	ADR2[1]	ADR2[0]
		ADR1[7]	ADR1[6]	ADR1[5]	ADR1[4]	ADR1[3]	ADR1[2]	ADR1[1]	ADR1[0]
	FLADR1*4	—	—	—	—	—	—	ADR[25]	ADR[24]
		ADR[23]	ADR[22]	ADR[21]	ADR[20]	ADR[19]	ADR[18]	ADR[17]	ADR[16]
		ADR[15]	ADR[14]	ADR[13]	ADR[12]	ADR[11]	ADR[10]	ADR[9]	ADR[8]
		ADR[7]	ADR[6]	ADR[5]	ADR[4]	ADR[3]	ADR[2]	ADR[1]	ADR[0]
	FLADR2	—	—	—	—	—	—	—	—
		—	—	—	—	—	—	—	—
		—	—	—	—	—	—	—	—
		ADR5[7]	ADR5[6]	ADR5[5]	ADR5[4]	ADR5[3]	ADR5[2]	ADR5[1]	ADR5[0]
	FLDTCNTR	ECFLW[7]	ECFLW[6]	ECFLW[5]	ECFLW[4]	ECFLW[3]	ECFLW[2]	ECFLW[1]	ECFLW[0]
		DTFLW[7]	DTFLW[6]	DTFLW[5]	DTFLW[4]	DTFLW[3]	DTFLW[2]	DTFLW[1]	DTFLW[0]
		—	—	—	—	DTCNT[11]	DTCNT[10]	DTCNT[9]	DTCNT[8]
		DTCNT[7]	DTCNT[6]	DTCNT[5]	DTCNT[4]	DTCNT[3]	DTCNT[2]	DTCNT[1]	DTCNT[0]

chanhvinh.com

Module Name	Register Abbreviation	Bit 31/23/15/7	Bit 30/22/14/6	Bit 29/21/13/5	Bit 28/20/12/4	Bit 27/19/11/3	Bit 26/18/10/2	Bit 25/17/9/1	Bit 24/16/8/0
NAND flash memory controller	FLDATAR	DT4[7]	DT4[6]	DT4[5]	DT4[4]	DT4[3]	DT4[2]	DT4[1]	DT4[0]
		DT3[7]	DT3[6]	DT3[5]	DT3[4]	DT3[3]	DT3[2]	DT3[1]	DT3[0]
		DT2[7]	DT2[6]	DT2[5]	DT2[4]	DT2[3]	DT2[2]	DT2[1]	DT2[0]
		DT1[7]	DT1[6]	DT1[5]	DT1[4]	DT1[3]	DT1[2]	DT1[1]	DT1[0]
	FLINTDMACR	—	—	—	—	—	—	—	—
		—	—	FIFOTRG[1]	FIFOTRG[0]	AC1CLR	AC0CLR	DREQ1EN	DREQ0EN
		—	—	—	—	—	—	—	STERB
		BTOERB	TRREQF1	TRREQF0	STERINTE	RBERINTE	TEINTE	TRINTE1	TRINTE0
	FLBSYTMR	—	—	—	—	—	—	—	—
		—	—	—	—	RBTMOUT[19]	RBTMOUT[18]	RBTMOUT[17]	RBTMOUT[16]
		RBTMOUT[15]	RBTMOUT[14]	RBTMOUT[13]	RBTMOUT[12]	RBTMOUT[11]	RBTMOUT[10]	RBTMOUT[9]	RBTMOUT[8]
		RBTMOUT[7]	RBTMOUT[6]	RBTMOUT[5]	RBTMOUT[4]	RBTMOUT[3]	RBTMOUT[2]	RBTMOUT[1]	RBTMOUT[0]
	FLBSYCNT	STAT[7]	STAT[6]	STAT[5]	STAT[4]	STAT[3]	STAT[2]	STAT[1]	STAT[0]
		—	—	—	—	RBTIMCNT [19]	RBTIMCNT [18]	RBTIMCNT [17]	RBTIMCNT [16]
		RBTIMCNT [15]	RBTIMCNT [14]	RBTIMCNT [13]	RBTIMCNT [12]	RBTIMCNT [11]	RBTIMCNT [10]	RBTIMCNT [9]	RBTIMCNT [8]
		RBTIMCNT [7]	RBTIMCNT [6]	RBTIMCNT [5]	RBTIMCNT [4]	RBTIMCNT [3]	RBTIMCNT [2]	RBTIMCNT [1]	RBTIMCNT [0]
	FLDTFIFO	DTFO[31]	DTFO[30]	DTFO[29]	DTFO[28]	DTFO[27]	DTFO[26]	DTFO[25]	DTFO[24]
		DTFO[23]	DTFO[22]	DTFO[21]	DTFO[20]	DTFO[19]	DTFO[18]	DTFO[17]	DTFO[16]
		DTFO[15]	DTFO[14]	DTFO[13]	DTFO[12]	DTFO[11]	DTFO[10]	DTFO[9]	DTFO[8]
		DTFO[7]	DTFO[6]	DTFO[5]	DTFO[4]	DTFO[3]	DTFO[2]	DTFO[1]	DTFO[0]
	FLECFIFO	ECFO[31]	ECFO[30]	ECFO[29]	ECFO[28]	ECFO[27]	ECFO[26]	ECFO[25]	ECFO[24]
		ECFO[23]	ECFO[22]	ECFO[21]	ECFO[20]	ECFO[19]	ECFO[18]	ECFO[17]	ECFO[16]
		ECFO[15]	ECFO[14]	ECFO[13]	ECFO[12]	ECFO[11]	ECFO[10]	ECFO[9]	ECFO[8]
		ECFO[7]	ECFO[6]	ECFO[5]	ECFO[4]	ECFO[3]	ECFO[2]	ECFO[1]	ECFO[0]
	FLTRCR	—	—	—	—	—	TRSTAT	TREND	TRSTRT
	FLHOLDCR	—	—	—	—	—	—	—	—
		—	—	—	—	—	—	—	—
		—	—	—	—	—	—	—	—
		—	—	—	—	—	—	—	HOLDEN

chanhvinh.com

Module Name	Register Abbreviation	Bit 31/23/15/7	Bit 30/22/14/6	Bit 29/21/13/5	Bit 28/20/12/4	Bit 27/19/11/3	Bit 26/18/10/2	Bit 25/17/9/1	Bit 24/16/8/0
USB 2.0 host/function module	SYSCFG	—	—	—	—	—	SCKE	—	—
		HSE	DCFM	DRPD	DPRPU	UCKFSEL	UCKPSEL	UPLLE	USBE
	BUSWAIT	—	—	—	—	—	—	—	—
		—	—	—	—	BWAIT[3]	BWAIT[2]	BWAIT[1]	BWAIT[0]
	SYSSTS	—	—	—	—	—	—	—	—
		—	—	—	—	—	—	LNST[1]	LNST[0]
	DVSTCTR	—	—	—	—	—	—	—	WKUP
		RWUPE	USBRST	RESUME	UACT	—	RHST[2]	RHST[1]	RHST[0]
	TESTMODE	—	—	—	—	—	—	—	—
		—	—	—	—	UTST[3]	UTST[2]	UTST[1]	UTST[0]
	D0FBCFG	—	—	—	—	—	—	—	—
		—	—	—	TENDE	—	—	—	—
	D1FBCFG	—	—	—	—	—	—	—	—
		—	—	—	TENDE	—	—	—	—
	CFIFO	FIFOPORT [31]	FIFOPORT [30]	FIFOPORT [29]	FIFOPORT [28]	FIFOPORT [27]	FIFOPORT [26]	FIFOPORT [25]	FIFOPORT [24]
		FIFOPORT [23]	FIFOPORT [22]	FIFOPORT [21]	FIFOPORT [20]	FIFOPORT [19]	FIFOPORT [18]	FIFOPORT [17]	FIFOPORT [16]
		FIFOPORT [15]	FIFOPORT [14]	FIFOPORT [13]	FIFOPORT [12]	FIFOPORT [11]	FIFOPORT [10]	FIFOPORT [9]	FIFOPORT [8]
		FIFOPORT [7]	FIFOPORT [6]	FIFOPORT [5]	FIFOPORT [4]	FIFOPORT [3]	FIFOPORT [2]	FIFOPORT [1]	FIFOPORT [0]
	D0FIFO	FIFOPORT [31]	FIFOPORT [30]	FIFOPORT [29]	FIFOPORT [28]	FIFOPORT [27]	FIFOPORT [26]	FIFOPORT [25]	FIFOPORT [24]
		FIFOPORT [23]	FIFOPORT [22]	FIFOPORT [21]	FIFOPORT [20]	FIFOPORT [19]	FIFOPORT [18]	FIFOPORT [17]	FIFOPORT [16]
		FIFOPORT [15]	FIFOPORT [14]	FIFOPORT [13]	FIFOPORT [12]	FIFOPORT [11]	FIFOPORT [10]	FIFOPORT [9]	FIFOPORT [8]
		FIFOPORT [7]	FIFOPORT [6]	FIFOPORT [5]	FIFOPORT [4]	FIFOPORT [3]	FIFOPORT [2]	FIFOPORT [1]	FIFOPORT [0]

chanhvinh.com

Module Name	Register Abbreviation	Bit 31/23/15/7	Bit 30/22/14/6	Bit 29/21/13/5	Bit 28/20/12/4	Bit 27/19/11/3	Bit 26/18/10/2	Bit 25/17/9/1	Bit 24/16/8/0
USB 2.0 host/function module	D1FIFO	FIFOPORT [31]	FIFOPORT [30]	FIFOPORT [29]	FIFOPORT [28]	FIFOPORT [27]	FIFOPORT [26]	FIFOPORT [25]	FIFOPORT [24]
		FIFOPORT [23]	FIFOPORT [22]	FIFOPORT [21]	FIFOPORT [20]	FIFOPORT [19]	FIFOPORT [18]	FIFOPORT [17]	FIFOPORT [16]
		FIFOPORT [15]	FIFOPORT [14]	FIFOPORT [13]	FIFOPORT [12]	FIFOPORT [11]	FIFOPORT [10]	FIFOPORT [9]	FIFOPORT [8]
		FIFOPORT [7]	FIFOPORT [6]	FIFOPORT [5]	FIFOPORT [4]	FIFOPORT [3]	FIFOPORT [2]	FIFOPORT [1]	FIFOPORT [0]
	CFIFOSEL	RCNT	REW	—	—	MBW[1]	MBW[0]	—	BIGEND
		—	—	ISEL	—	CURPIPE[3]	CURPIPE[2]	CURPIPE[1]	CURPIPE[0]
	CFIFOCTR	BVAL	BCLR	FRDY	—	DTLN[11]	DTLN[10]	DTLN[9]	DTLN[8]
		DTLN[7]	DTLN[6]	DTLN[5]	DTLN[4]	DTLN[3]	DTLN[2]	DTLN[1]	DTLN[0]
	D0FIFOSEL	RCNT	REW	DCLRM	DREQE	MBW[1]	MBW[0]	—	BIGEND
		—	—	—	—	CURPIPE[3]	CURPIPE[2]	CURPIPE[1]	CURPIPE[0]
	D0FIFOCTR	BVAL	BCLR	FRDY	—	DTLN[11]	DTLN[10]	DTLN[9]	DTLN[8]
		DTLN[7]	DTLN[6]	DTLN[5]	DTLN[4]	DTLN[3]	DTLN[2]	DTLN[1]	DTLN[0]
	D1FIFOSEL	RCNT	REW	DCLRM	DREQE	MBW[1]	MBW[0]	—	BIGEND
		—	—	—	—	CURPIPE[3]	CURPIPE[2]	CURPIPE[1]	CURPIPE[0]
	D1FIFOCTR	BVAL	BCLR	FRDY	—	DTLN[11]	DTLN[10]	DTLN[9]	DTLN[8]
		DTLN[7]	DTLN[6]	DTLN[5]	DTLN[4]	DTLN[3]	DTLN[2]	DTLN[1]	DTLN[0]
	INTENB0	VBSE	RSME	SOFE	DVSE	CTRE	BEMPE	NRDYE	BRDYE
		—	—	—	—	—	—	—	—
	INTENB1	—	BCHGE	—	DTCHE	ATTCHE	—	—	—
		—	EOFERRE	SIGNE	SACKE	—	—	—	—
	BRDYENB	—	—	—	—	—	—	PIPE9BRDYE	PIPE8BRDYE
		PIPE7BRDYE	PIPE6BRDYE	PIPE5BRDYE	PIPE4BRDYE	PIPE3BRDYE	PIPE2BRDYE	PIPE1BRDYE	PIPE0BRDYE
	NRDYENB	—	—	—	—	—	—	PIPE9NRDYE	PIPE8NRDYE
		PIPE7NRDYE	PIPE6NRDYE	PIPE5NRDYE	PIPE4NRDYE	PIPE3NRDYE	PIPE2NRDYE	PIPE1NRDYE	PIPE0NRDYE
	BEMPENB	—	—	—	—	—	—	PIPE9BEMPE	PIPE8BEMPE
		PIPE7BEMPE	PIPE6BEMPE	PIPE5BEMPE	PIPE4BEMPE	PIPE3BEMPE	PIPE2BEMPE	PIPE1BEMPE	PIPE0BEMPE
	SOFCFG	—	—	—	—	—	—	—	TRNENSEL
		—	BRDYM	—	—	—	—	—	—

chanhvinh.com

Module Name	Register Abbreviation	Bit 31/23/15/7	Bit 30/22/14/6	Bit 29/21/13/5	Bit 28/20/12/4	Bit 27/19/11/3	Bit 26/18/10/2	Bit 25/17/9/1	Bit 24/16/8/0
USB 2.0 host/function module	INTSTS0	VBINT	RESM	SOFR	DVST	CTRT	BEMP	NRDY	BRDY
		VBSTS	DVSQ[2]	DVSQ[1]	DVSQ[0]	VALID	CTSQ[2]	CTSQ[1]	CTSQ[0]
	INTSTS1	—	BCHG	—	DTCH	ATTCH	—	—	—
		—	EOFERR	SIGN	SACK	—	—	—	—
	BRDYSTS	—	—	—	—	—	—	PIPE9BRDY	PIPE8BRDY
		PIPE7BRDY	PIPE6BRDY	PIPE5BRDY	PIPE4BRDY	PIPE3BRDY	PIPE2BRDY	PIPE1BRDY	PIPE0BRDY
	NRDYSTS	—	—	—	—	—	—	PIPE9NRDY	PIPE8NRDY
		PIPE7NRDY	PIPE6NRDY	PIPE5NRDY	PIPE4NRDY	PIPE3NRDY	PIPE2NRDY	PIPE1NRDY	PIPE0NRDY
	BEMPSTS	—	—	—	—	—	—	PIPE9BEMP	PIPE8BEMP
		PIPE7BEMP	PIPE6BEMP	PIPE5BEMP	PIPE4BEMP	PIPE3BEMP	PIPE2BEMP	PIPE1BEMP	PIPE0BEMP
	FRMNUM	OVRN	CRCE	—	—	—	FRNM[10]	FRNM[9]	FRNM[8]
		FRNM[7]	FRNM[6]	FRNM[5]	FRNM[4]	FRNM[3]	FRNM[2]	FRNM[1]	FRNM[0]
	UFRMNUM	—	—	—	—	—	—	—	—
		—	—	—	—	—	UFRNM[2]	UFRNM[1]	UFRNM[0]
	USBADDR	—	—	—	—	—	—	—	—
		—	USBADDR[6]	USBADDR[5]	USBADDR[4]	USBADDR[3]	USBADDR[2]	USBADDR[1]	USBADDR[0]
	USBREQ	BREQUEST[7]	BREQUEST[6]	BREQUEST[5]	BREQUEST[4]	BREQUEST[3]	BREQUEST[2]	BREQUEST[1]	BREQUEST[0]
		BMREQUEST TYPE[7]	BMREQUEST TYPE[6]	BMREQUEST TYPE[5]	BMREQUEST TYPE[4]	BMREQUEST TYPE[3]	BMREQUEST TYPE[2]	BMREQUEST TYPE[1]	BMREQUEST TYPE[0]
	USBVAL	WVALUE[15]	WVALUE[14]	WVALUE[13]	WVALUE[12]	WVALUE[11]	WVALUE[10]	WVALUE[9]	WVALUE[8]
		WVALUE[7]	WVALUE[6]	WVALUE[5]	WVALUE[4]	WVALUE[3]	WVALUE[2]	WVALUE[1]	WVALUE[0]
	USBINDX	WINDEX[15]	WINDEX[14]	WINDEX[13]	WINDEX[12]	WINDEX[11]	WINDEX[10]	WINDEX[9]	WINDEX[8]
		WINDEX[7]	WINDEX[6]	WINDEX[5]	WINDEX[4]	WINDEX[3]	WINDEX[2]	WINDEX[1]	WINDEX[0]
	USBLENG	WLENGTH[15]	WLENGTH[14]	WLENGTH[13]	WLENGTH[12]	WLENGTH[11]	WLENGTH[10]	WLENGTH[9]	WLENGTH[8]
		WLENGTH[7]	WLENGTH[6]	WLENGTH[5]	WLENGTH[4]	WLENGTH[3]	WLENGTH[2]	WLENGTH[1]	WLENGTH[0]
	DCPCFG	—	—	—	—	—	—	—	—
		—	—	—	DIR	—	—	—	—
	DCPMAXP	DEVSEL[3]	DEVSEL[2]	DEVSEL[1]	DEVSEL[0]	—	—	—	—
		—	MXPS[6]	MXPS[5]	MXPS[4]	MXPS[3]	MXPS[2]	MXPS[1]	MXPS[0]
	DCPCTR	BSTS	SUREQ	CSCLR	CSSTS	SUREQCLR	—	—	SQCLR
		SQSET	SQMON	PBUSY	PINGE	—	CCPL	PID[1]	PID[0]

chanhvinh.com

Module Name	Register Abbreviation	Bit 31/23/15/7	Bit 30/22/14/6	Bit 29/21/13/5	Bit 28/20/12/4	Bit 27/19/11/3	Bit 26/18/10/2	Bit 25/17/9/1	Bit 24/16/8/0
USB 2.0 host/function module	PIPESEL	—	—	—	—	—	—	—	—
		—	—	—	—	PIPESEL[3]	PIPESEL[2]	PIPESEL[1]	PIPESEL[0]
	PIPECFG	TYPE[1]	TYPE[0]	—	—	—	BFRE	DBLB	CNTMD
		SHTNAK	—	—	DIR	EPNUM[3]	EPNUM[2]	EPNUM[1]	EPNUM[0]
	PIPEBUF	—	BUFSIZE[4]	BUFSIZE[3]	BUFSIZE[2]	BUFSIZE[1]	BUFSIZE[0]	—	—
		—	BUFNMB[6]	BUFNMB[5]	BUFNMB[4]	BUFNMB[3]	BUFNMB[2]	BUFNMB[1]	BUFNMB[0]
	PIPEMAXP	DEVSEL[3]	DEVSEL[2]	DEVSEL[1]	DEVSEL[0]	—	MXPS[10]	MXPS[9]	MXPS[8]
		MXPS[7]	MXPS[6]	MXPS[5]	MXPS[4]	MXPS[3]	MXPS[2]	MXPS[1]	MXPS[0]
	PIPEPERI	—	—	—	IFIS	—	—	—	—
		—	—	—	—	—	IITV[2]	IITV[1]	IITV[0]
	PIPE1CTR	BSTS	INBUFM	CSCLR	CSSTS	—	ATREPM	ACLRM	SQCLR
		SQSET	SQMON	PBUSY	—	—	—	PID[1]	PID[0]
	PIPE2CTR	BSTS	INBUFM	CSCLR	CSSTS	—	ATREPM	ACLRM	SQCLR
		SQSET	SQMON	PBUSY	—	—	—	PID[1]	PID[0]
	PIPE3CTR	BSTS	INBUFM	CSCLR	CSSTS	—	ATREPM	ACLRM	SQCLR
		SQSET	SQMON	PBUSY	—	—	—	PID[1]	PID[0]
	PIPE4CTR	BSTS	INBUFM	CSCLR	CSSTS	—	ATREPM	ACLRM	SQCLR
		SQSET	SQMON	PBUSY	—	—	—	PID[1]	PID[0]
	PIPE5CTR	BSTS	INBUFM	CSCLR	CSSTS	—	ATREPM	ACLRM	SQCLR
		SQSET	SQMON	PBUSY	—	—	—	PID[1]	PID[0]
	PIPE6CTR	BSTS	—	CSCLR	CSSTS	—	—	ACLRM	SQCLR
		SQSET	SQMON	PBUSY	—	—	—	PID[1]	PID[0]
	PIPE7CTR	BSTS	—	CSCLR	CSSTS	—	—	ACLRM	SQCLR
		SQSET	SQMON	PBUSY	—	—	—	PID[1]	PID[0]
	PIPE8CTR	BSTS	—	CSCLR	CSSTS	—	—	ACLRM	SQCLR
		SQSET	SQMON	PBUSY	—	—	—	PID[1]	PID[0]
	PIPE9CTR	BSTS	—	CSCLR	CSSTS	—	—	ACLRM	SQCLR
		SQSET	SQMON	PBUSY	—	—	—	PID[1]	PID[0]
	PIPE1TRE	—	—	—	—	—	—	TRENB	TRCLR
		—	—	—	—	—	—	—	—
	PIPE1TRN	TRNCNT[15]	TRNCNT[14]	TRNCNT[13]	TRNCNT[12]	TRNCNT[11]	TRNCNT[10]	TRNCNT[9]	TRNCNT[8]
		TRNCNT[7]	TRNCNT[6]	TRNCNT[5]	TRNCNT[4]	TRNCNT[3]	TRNCNT[2]	TRNCNT[1]	TRNCNT[0]

chanhvinh.com

Module Name	Register Abbreviation	Bit 31/23/15/7	Bit 30/22/14/6	Bit 29/21/13/5	Bit 28/20/12/4	Bit 27/19/11/3	Bit 26/18/10/2	Bit 25/17/9/1	Bit 24/16/8/0
USB 2.0 host/function module	PIPE2TRE	—	—	—	—	—	—	TRENB	TRCLR
		—	—	—	—	—	—	—	—
	PIPE2TRN	TRNCNT[15]	TRNCNT[14]	TRNCNT[13]	TRNCNT[12]	TRNCNT[11]	TRNCNT[10]	TRNCNT[9]	TRNCNT[8]
		TRNCNT[7]	TRNCNT[6]	TRNCNT[5]	TRNCNT[4]	TRNCNT[3]	TRNCNT[2]	TRNCNT[1]	TRNCNT[0]
	PIPE3TRE	—	—	—	—	—	—	TRENB	TRCLR
		—	—	—	—	—	—	—	—
	PIPE3TRN	TRNCNT[15]	TRNCNT[14]	TRNCNT[13]	TRNCNT[12]	TRNCNT[11]	TRNCNT[10]	TRNCNT[9]	TRNCNT[8]
		TRNCNT[7]	TRNCNT[6]	TRNCNT[5]	TRNCNT[4]	TRNCNT[3]	TRNCNT[2]	TRNCNT[1]	TRNCNT[0]
	PIPE4TRE	—	—	—	—	—	—	TRENB	TRCLR
		—	—	—	—	—	—	—	—
	PIPE4TRN	TRNCNT[15]	TRNCNT[14]	TRNCNT[13]	TRNCNT[12]	TRNCNT[11]	TRNCNT[10]	TRNCNT[9]	TRNCNT[8]
		TRNCNT[7]	TRNCNT[6]	TRNCNT[5]	TRNCNT[4]	TRNCNT[3]	TRNCNT[2]	TRNCNT[1]	TRNCNT[0]
	PIPE5TRE	—	—	—	—	—	—	TRENB	TRCLR
		—	—	—	—	—	—	—	—
	PIPE5TRN	TRNCNT[15]	TRNCNT[14]	TRNCNT[13]	TRNCNT[12]	TRNCNT[11]	TRNCNT[10]	TRNCNT[9]	TRNCNT[8]
		TRNCNT[7]	TRNCNT[6]	TRNCNT[5]	TRNCNT[4]	TRNCNT[3]	TRNCNT[2]	TRNCNT[1]	TRNCNT[0]
	DEVADD0	—	UPPHUB[3]	UPPHUB[2]	UPPHUB[1]	UPPHUB[0]	HUBPORT[2]	HUBPORT[1]	HUBPORT[0]
		USBSPD[1]	USBSPD[0]	—	—	—	—	—	—
	DEVADD1	—	UPPHUB[3]	UPPHUB[2]	UPPHUB[1]	UPPHUB[0]	HUBPORT[2]	HUBPORT[1]	HUBPORT[0]
		USBSPD[1]	USBSPD[0]	—	—	—	—	—	—
	DEVADD2	—	UPPHUB[3]	UPPHUB[2]	UPPHUB[1]	UPPHUB[0]	HUBPORT[2]	HUBPORT[1]	HUBPORT[0]
		USBSPD[1]	USBSPD[0]	—	—	—	—	—	—
	DEVADD3	—	UPPHUB[3]	UPPHUB[2]	UPPHUB[1]	UPPHUB[0]	HUBPORT[2]	HUBPORT[1]	HUBPORT[0]
		USBSPD[1]	USBSPD[0]	—	—	—	—	—	—
	DEVADD4	—	UPPHUB[3]	UPPHUB[2]	UPPHUB[1]	UPPHUB[0]	HUBPORT[2]	HUBPORT[1]	HUBPORT[0]
		USBSPD[1]	USBSPD[0]	—	—	—	—	—	—
	DEVADD5	—	UPPHUB[3]	UPPHUB[2]	UPPHUB[1]	UPPHUB[0]	HUBPORT[2]	HUBPORT[1]	HUBPORT[0]
		USBSPD[1]	USBSPD[0]	—	—	—	—	—	—
	DEVADD6	—	HPPHUB[3]	HPPHUB[2]	HPPHUB[1]	HPPHUB[0]	HUBPORT[2]	HUBPORT[1]	HUBPORT[0]
		USBSPD[1]	UPPHUB[3]	UPPHUB[2]	UPPHUB[1]	UPPHUB[0]	—	—	—
	DEVADD7	—	HPPHUB[3]	HPPHUB[2]	HPPHUB[1]	HPPHUB[0]	HUBPORT[2]	HUBPORT[1]	HUBPORT[0]
		USBSPD[1]	USBSPD[0]	—	—	—	—	—	—

chanhvinh.com

Module Name	Register Abbreviation	Bit 31/23/15/7	Bit 30/22/14/6	Bit 29/21/13/5	Bit 28/20/12/4	Bit 27/19/11/3	Bit 26/18/10/2	Bit 25/17/9/1	Bit 24/16/8/0
USB 2.0 host/function module	DEVADD8	—	UPPHUB[3]	UPPHUB[2]	UPPHUB[1]	UPPHUB[0]	HUBPORT[2]	HUBPORT[1]	HUBPORT[0]
		USBSPD[1]	USBSPD[0]	—	—	—	—	—	—
	DEVADD9	—	UPPHUB[3]	UPPHUB[2]	UPPHUB[1]	UPPHUB[0]	HUBPORT[2]	HUBPORT[1]	HUBPORT[0]
		USBSPD[1]	USBSPD[0]	—	—	—	—	—	—
	DEVADDA	—	UPPHUB[3]	UPPHUB[2]	UPPHUB[1]	UPPHUB[0]	HUBPORT[2]	HUBPORT[1]	HUBPORT[0]
		USBSPD[1]	USBSPD[0]	—	—	—	—	—	—
Digital video decoder	ADCCR1	—	—	—	—	—	—	—	AGCMODE
		—	—	—	—	—	—	—	—
	TGCR1	—	—	—	—	—	—	—	SRCLEFT[8]
		SRCLEFT[7]	SRCLEFT[6]	SRCLEFT[5]	SRCLEFT[4]	SRCLEFT[3]	SRCLEFT[2]	SRCLEFT[1]	SRCLEFT[0]
	TGCR2	SRCTOP[5]	SRCTOP[4]	SRCTOP[3]	SRCTOP[2]	SRCTOP[1]	SRCTOP[0]	SRCHEIGHT [9]	SRCHEIGHT [8]
		SRCHEIGHT [7]	SRCHEIGHT [6]	SRCHEIGHT [5]	SRCHEIGHT [4]	SRCHEIGHT [3]	SRCHEIGHT [2]	SRCHEIGHT [1]	SRCHEIGHT [0]
	TGCR3	—	—	—	—	—	SRCWIDTH [10]	SRCWIDTH [9]	SRCWIDTH [8]
		SRCWIDTH [7]	SRCWIDTH [6]	SRCWIDTH [5]	SRCWIDTH [4]	SRCWIDTH [3]	SRCWIDTH [2]	SRCWIDTH [1]	SRCWIDTH [0]
	SYNSCR1	LPFVSYNC[2]	LPFVSYNC[1]	LPFVSYNC[0]	LPFHSYNC[2]	LPFHSYNC[1]	LPFHSYNC[0]	—	—
		VELOCITY SHIFT_H[3]	VELOCITY SHIFT_H[2]	VELOCITY SHIFT_H[1]	VELOCITY SHIFT_H[0]	SLICER MODE_H[1]	SLICER MODE_H[0]	SLICER MODE_V[1]	SLICER MODE_V[0]
	SYNSCR2	—	—	—	—	SYNCMAX DUTY_H[5]	SYNCMAX DUTY_H[4]	SYNCMAX DUTY_H[3]	SYNCMAX DUTY_H[2]
		SYNCMAX DUTY_H[1]	SYNCMAX DUTY_H[0]	SYNCMIN DUTY_H[5]	SYNCMIN DUTY_H[4]	SYNCMIN DUTY_H[3]	SYNCMIN DUTY_H[2]	SYNCMIN DUTY_H[1]	SYNCMIN DUTY_H[0]
	SYNSCR3	—	—	SSCLIP SEL[3]	SSCLIP SEL[2]	SSCLIP SEL[1]	SSCLIP SEL[0]	CSYNC SLICE_H[9]	CSYNC SLICE_H[8]
		CSYNC SLICE_H[7]	CSYNC SLICE_H[6]	CSYNC SLICE_H[5]	CSYNC SLICE_H[4]	CSYNC SLICE_H[3]	CSYNC SLICE_H[2]	CSYNC SLICE_H[1]	CSYNC SLICE_H[0]
	SYNSCR4	—	—	—	—	SYNCMAX DUTY_V[5]	SYNCMAX DUTY_V[4]	SYNCMAX DUTY_V[3]	SYNCMAX DUTY_V[2]
		SYNCMAX DUTY_V[1]	SYNCMAX DUTY_V[0]	SYNCMIN DUTY_V[5]	SYNCMIN DUTY_V[4]	SYNCMIN DUTY_V[3]	SYNCMIN DUTY_V[2]	SYNCMIN DUTY_V[1]	SYNCMIN DUTY_V[0]

chanhvinh.com

Module Name	Register Abbreviation	Bit 31/23/15/7	Bit 30/22/14/6	Bit 29/21/13/5	Bit 28/20/12/4	Bit 27/19/11/3	Bit 26/18/10/2	Bit 25/17/9/1	Bit 24/16/8/0
Digital video decoder	SYNSCR5	VSYNC DELAY	VSYNC SLICE[4]	VSYNC SLICE[3]	VSYNC SLICE[2]	VSYNC SLICE[1]	VSYNC SLICE[0]	CSYNC SLICE_V[9]	CSYNC SLICE_V[8]
		CSYNC SLICE_V[7]	CSYNC SLICE_V[6]	CSYNC SLICE_V[5]	CSYNC SLICE_V[4]	CSYNC SLICE_V[3]	CSYNC SLICE_V[2]	CSYNC SLICE_V[1]	CSYNC SLICE_V[0]
	HAFCCR1	HAFCGAIN [3]	HAFCGAIN [2]	HAFCGAIN [1]	HAFCGAIN [0]	—	HAFCFREE RUN	HAFCTYP [9]	HAFCTYP [8]
		HAFCTYP[7]	HAFCTYP[6]	HAFCTYP[5]	HAFCTYP[4]	HAFCTYP[3]	HAFCTYP[2]	HAFCTYP[1]	HAFCTYP[0]
	HAFCCR2	HAFCSTART [3]	HAFCSTART [2]	HAFCSTART [1]	HAFCSTART [0]	NOX2HOSC	DOX2HOSC	HAFCMAX [9]	HAFCMAX [8]
		HAFCMAX [7]	HAFCMAX [6]	HAFCMAX [5]	HAFCMAX [4]	HAFCMAX [3]	HAFCMAX [2]	HAFCMAX [1]	HAFCMAX [0]
	HAFCCR3	HAFCEND[3]	HAFCEND[2]	HAFCEND[1]	HAFCEND[0]	HAFCMODE [1]	HAFCMODE [0]	HAFCMIN[9]	HAFCMIN[8]
		HAFCMIN[7]	HAFCMIN[6]	HAFCMIN[5]	HAFCMIN[4]	HAFCMIN[3]	HAFCMIN[2]	HAFCMIN[1]	HAFCMIN[0]
	VCDWCR1	VCDFREERUN	NOVCD50	NOVCD60	VCD DEFAULT[1]	VCD DEFAULT[0]	VCD WINDOW[5]	VCD WINDOW[4]	VCD WINDOW[3]
		VCD WINDOW[2]	VCD WINDOW[1]	VCD WINDOW[0]	VCD OFFSET[4]	VCD OFFSET[3]	VCD OFFSET[2]	VCD OFFSET[1]	VCD OFFSET[0]
	DCPCR1	DCPMODE_Y	—	—	—	DCPCHECK	—	BLANK LEVEL_Y[9]	BLANK LEVEL_Y[8]
		BLANK LEVEL_Y[7]	BLANK LEVEL_Y[6]	BLANK LEVEL_Y[5]	BLANK LEVEL_Y[4]	BLANK LEVEL_Y[3]	BLANK LEVEL_Y[2]	BLANK LEVEL_Y[1]	BLANK LEVEL_Y[0]
	DCPCR2	DCPMODE_C	—	—	—	BLANK LEVEL_CB[5]	BLANK LEVEL_CB[4]	BLANK LEVEL_CB[3]	BLANK LEVEL_CB[2]
		BLANK LEVEL_CB[1]	BLANK LEVEL_CB[0]	BLANK LEVEL_CR[5]	BLANK LEVEL_CR[4]	BLANK LEVEL_CR[3]	BLANK LEVEL_CR[2]	BLANK LEVEL_CR[1]	BLANK LEVEL_CR[0]
	DCPCR3	—	DCP RESPONSE[2]	DCP RESPONSE[1]	DCP RESPONSE[0]	—	—	—	—
		—	—	—	—	—	—	—	—
	DCPCR4	DCPSTART [5]	DCPSTART [4]	DCPSTART [3]	DCPSTART [2]	DCPSTART [1]	DCPSTART [0]	—	—
		—	—	—	—	—	—	—	—
	DCPCR5	DCPEND[5]	DCPEND[4]	DCPEND[3]	DCPEND[2]	DCPEND[1]	DCPEND[0]	—	—
		—	—	—	—	—	—	—	—

chanhvinh.com

Module Name	Register Abbreviation	Bit 31/23/15/7	Bit 30/22/14/6	Bit 29/21/13/5	Bit 28/20/12/4	Bit 27/19/11/3	Bit 26/18/10/2	Bit 25/17/9/1	Bit 24/16/8/0
Digital video decoder	DCPCR6	—	DCPWIDTH [6]	DCPWIDTH [5]	DCPWIDTH [4]	DCPWIDTH [3]	DCPWIDTH [2]	DCPWIDTH [1]	DCPWIDTH [0]
		—	—	—	—	—	—	—	—
	DCPCR7	DCPPOS_Y [7]	DCPPOS_Y [6]	DCPPOS_Y [5]	DCPPOS_Y [4]	DCPPOS_Y [3]	DCPPOS_Y [2]	DCPPOS_Y [1]	DCPPOS_Y [0]
		—	—	—	—	—	—	—	—
	DCPCR8	DCPPOS_C [7]	DCPPOS_C [6]	DCPPOS_C [5]	DCPPOS_C [4]	DCPPOS_C [3]	DCPPOS_C [2]	DCPPOS_C [1]	DCPPOS_C [0]
		—	—	—	—	—	—	—	—
	NSDCR	—	—	ACFINPUT[1]	ACFINPUT[0]	—	—	—	ACFLAG TIME[4]
		ACFLAG TIME[3]	ACFLAG TIME[2]	ACFLAG TIME[1]	ACFLAG TIME[0]	—	—	ACF FILTER[1]	ACF FILTER[0]
	BTLCR	LOCK RANGE[1]	LOCK RANGE[0]	LOOP GAIN[1]	LOOP GAIN[0]	LOCK LIMIT[1]	LOCK LIMIT[0]	BCO FREERUN	—
		DEFAULT SYS[1]	DEFAULT SYS[0]	NONTSC358	NONTSC443	NOPALM	NOPALN	NOPAL443	NOSECAM
	BTGPCR	BGPCHECK	BGPWIDTH [6]	BGPWIDTH [5]	BGPWIDTH [4]	BGPWIDTH [3]	BGPWIDTH [2]	BGPWIDTH [1]	BGPWIDTH [0]
		BGPSTART [7]	BGPSTART [6]	BGPSTART [5]	BGPSTART [4]	BGPSTART [3]	BGPSTART [2]	BGPSTART [1]	BGPSTART [0]
	ACCCR1	KILLER OFFSET[3]	KILLER OFFSET[2]	KILLER OFFSET[1]	KILLER OFFSET[0]	ACCMODE	ACC MAXGAIN[1]	ACC MAXGAIN[0]	ACC LEVEL[8]
		ACCLEVEL[7]	ACCLEVEL[6]	ACCLEVEL[5]	ACCLEVEL[4]	ACCLEVEL[3]	ACCLEVEL[2]	ACCLEVEL[1]	ACCLEVEL[0]
	ACCCR2	—	—	—	—	—	CHROMA SUBGAIN[1]	CHROMA SUBGAIN[0]	CHROMA MAINGAIN[8]
		CHROMA MAINGAIN[7]	CHROMA MAINGAIN[6]	CHROMA MAINGAIN[5]	CHROMA MAINGAIN[4]	CHROMA MAINGAIN[3]	CHROMA MAINGAIN[2]	CHROMA MAINGAIN[1]	CHROMA MAINGAIN[0]
	ACCCR3	ACC RESPONSE [1]	ACC RESPONSE [0]	ACC PRECIS[5]	ACC PRECIS[4]	ACC PRECIS[3]	ACC PRECIS[2]	ACC PRECIS[1]	ACC PRECIS[0]
		KILLER MODE	KILLER LEVEL[5]	KILLER LEVEL[4]	KILLER LEVEL[3]	KILLER LEVEL[2]	KILLER LEVEL[1]	KILLER LEVEL[0]	—
	TINTCR	TINTSUB[5]	TINTSUB[4]	TINTSUB[3]	TINTSUB[2]	TINTSUB[1]	TINTSUB[0]	TINTMAIN[9]	TINTMAIN[8]
		TINTMAIN[7]	TINTMAIN[6]	TINTMAIN[5]	TINTMAIN[4]	TINTMAIN[3]	TINTMAIN[2]	TINTMAIN[1]	TINTMAIN[0]

chanhvinh.com

Module Name	Register Abbreviation	Bit 31/23/15/7	Bit 30/22/14/6	Bit 29/21/13/5	Bit 28/20/12/4	Bit 27/19/11/3	Bit 26/18/10/2	Bit 25/17/9/1	Bit 24/16/8/0
Digital video decoder	YCDCR	—	—	—	—	—	—	—	LUMA DELAY[4]
		LUMADELAY [3]	LUMADELAY [2]	LUMADELAY [1]	LUMADELAY [0]	—	CHROMALPF	DEMOD MODE[1]	DEMOD MODE[0]
	AGCCR1	—	—	DOREDUCE	NOREDUCE	AGC RESPONSE[2]	AGC RESPONSE[1]	AGC RESPONSE[0]	AGC LEVEL[8]
		AGC LEVEL[7]	AGC LEVEL[6]	AGC LEVEL[5]	AGC LEVEL[4]	AGC LEVEL[3]	AGC LEVEL[2]	AGC LEVEL[1]	AGC LEVEL[0]
	AGCCR2	—	—	AGC PRECIS[5]	AGC PRECIS[4]	AGC PRECIS[3]	AGC PRECIS[2]	AGC PRECIS[1]	AGC PRECIS[0]
		—	—	—	—	—	—	—	—
	PKLIMITCR	PEAK LEVEL[1]	PEAK LEVEL[0]	PEAK ATTACK[1]	PEAK ATTACK[0]	PEAK RELEASE[1]	PEAK RELEASE[0]	PEAK RATIO[1]	PEAK RATIO[0]
		MAXPEAK SAMPLES[7]	MAXPEAK SAMPLES[6]	MAXPEAK SAMPLES[5]	MAXPEAK SAMPLES[4]	MAXPEAK SAMPLES[3]	MAXPEAK SAMPLES[2]	MAXPEAK SAMPLES[1]	MAXPEAK SAMPLES[0]
	RGORCR1	—	—	—	—	—	—	RADJ_O_ LEVEL0[9]	RADJ_O_ LEVEL0[8]
		RADJ_O_ LEVEL0[7]	RADJ_O_ LEVEL0[6]	RADJ_O_ LEVEL0[5]	RADJ_O_ LEVEL0[4]	RADJ_O_ LEVEL0[3]	RADJ_O_ LEVEL0[2]	RADJ_O_ LEVEL0[1]	RADJ_O_ LEVEL0[0]
	RGORCR2	—	—	—	—	—	—	RADJ_U_ LEVEL0[9]	RADJ_U_ LEVEL0[8]
		RADJ_U_ LEVEL0[7]	RADJ_U_ LEVEL0[6]	RADJ_U_ LEVEL0[5]	RADJ_U_ LEVEL0[4]	RADJ_U_ LEVEL0[3]	RADJ_U_ LEVEL0[2]	RADJ_U_ LEVEL0[1]	RADJ_U_ LEVEL0[0]
	RGORCR3	—	—	—	—	—	—	RADJ_O_ LEVEL1[9]	RADJ_O_ LEVEL1[8]
		RADJ_O_ LEVEL1[7]	RADJ_O_ LEVEL1[6]	RADJ_O_ LEVEL1[5]	RADJ_O_ LEVEL1[4]	RADJ_O_ LEVEL1[3]	RADJ_O_ LEVEL1[2]	RADJ_O_ LEVEL1[1]	RADJ_O_ LEVEL1[0]
	RGORCR4	—	—	—	—	—	—	RADJ_U_ LEVEL1[9]	RADJ_U_ LEVEL1[8]
		RADJ_U_ LEVEL1[7]	RADJ_U_ LEVEL1[6]	RADJ_U_ LEVEL1[5]	RADJ_U_ LEVEL1[4]	RADJ_U_ LEVEL1[3]	RADJ_U_ LEVEL1[2]	RADJ_U_ LEVEL1[1]	RADJ_U_ LEVEL1[0]
	RGORCR5	—	—	—	—	—	—	RADJ_O_ LEVEL2[9]	RADJ_O_ LEVEL2[8]
		RADJ_O_ LEVEL2[7]	RADJ_O_ LEVEL2[6]	RADJ_O_ LEVEL2[5]	RADJ_O_ LEVEL2[4]	RADJ_O_ LEVEL2[3]	RADJ_O_ LEVEL2[2]	RADJ_O_ LEVEL2[1]	RADJ_O_ LEVEL2[0]

chanhvinh.com

Module Name	Register Abbreviation	Bit 31/23/15/7	Bit 30/22/14/6	Bit 29/21/13/5	Bit 28/20/12/4	Bit 27/19/11/3	Bit 26/18/10/2	Bit 25/17/9/1	Bit 24/16/8/0
Digital video decoder	RGORCR6	—	—	—	—	—	—	RADJ_U_LEVEL2[9]	RADJ_U_LEVEL2[8]
		RADJ_U_LEVEL2[7]	RADJ_U_LEVEL2[6]	RADJ_U_LEVEL2[5]	RADJ_U_LEVEL2[4]	RADJ_U_LEVEL2[3]	RADJ_U_LEVEL2[2]	RADJ_U_LEVEL2[1]	RADJ_U_LEVEL2[0]
	RGORCR7	—	TEST_MONI[2]	TEST_MONI[1]	TEST_MONI[0]	RADJ_MIX_K_FIX[2]	RADJ_MIX_K_FIX[1]	RADJ_MIX_K_FIX[0]	—
		—	—	—	—	—	UCMP_SW	DCMP_SW	HWIDE_SW
	AFCPFCR	—	—	—	—	—	—	—	—
		—	—	—	PHDET_FIX	—	PHDET_DIV[2]	PHDET_DIV[1]	PHDET_DIV[0]
	RUPDCR	NEWSETTING	—	—	—	—	—	—	—
		—	—	—	—	—	—	—	—
	VSYNCSR	FHCOUNT_L	FHLOCK	ISNOISY	FHMODE	NOSIGNAL	FVLOCK	FVMODE	INTERLACED
		FVCOUNT[7]	FVCOUNT[6]	FVCOUNT[5]	FVCOUNT[4]	FVCOUNT[3]	FVCOUNT[2]	FVCOUNT[1]	FVCOUNT[0]
	HSYNCSR	FHCOUNT_H[16]	FHCOUNT_H[15]	FHCOUNT_H[14]	FHCOUNT_H[13]	FHCOUNT_H[12]	FHCOUNT_H[11]	FHCOUNT_H[10]	FHCOUNT_H[9]
		FHCOUNT_H[8]	FHCOUNT_H[7]	FHCOUNT_H[6]	FHCOUNT_H[5]	FHCOUNT_H[4]	FHCOUNT_H[3]	FHCOUNT_H[2]	FHCOUNT_H[1]
	DCPSR1	CLAMP LEVEL_CB[5]	CLAMP LEVEL_CB[4]	CLAMP LEVEL_CB[3]	CLAMP LEVEL_CB[2]	CLAMP LEVEL_CB[1]	CLAMP LEVEL_CB[0]	CLAMP LEVEL_Y[9]	CLAMP LEVEL_Y[8]
		CLAMP LEVEL_Y[7]	CLAMP LEVEL_Y[6]	CLAMP LEVEL_Y[5]	CLAMP LEVEL_Y[4]	CLAMP LEVEL_Y[3]	CLAMP LEVEL_Y[2]	CLAMP LEVEL_Y[1]	CLAMP LEVEL_Y[0]
	DCPSR2	CLAMP LEVEL_CR[5]	CLAMP LEVEL_CR[4]	CLAMP LEVEL_CR[3]	CLAMP LEVEL_CR[2]	CLAMP LEVEL_CR[1]	CLAMP LEVEL_CR[0]	—	—
		—	—	—	—	—	—	—	—
	NSDSR	ACFSTRENGTH[15]	ACFSTRENGTH[14]	ACFSTRENGTH[13]	ACFSTRENGTH[12]	ACFSTRENGTH[11]	ACFSTRENGTH[10]	ACFSTRENGTH[9]	ACFSTRENGTH[8]
		ACFSTRENGTH[7]	ACFSTRENGTH[6]	ACFSTRENGTH[5]	ACFSTRENGTH[4]	ACFSTRENGTH[3]	ACFSTRENGTH[2]	ACFSTRENGTH[1]	ACFSTRENGTH[0]
	CROMASR1	COLOR SYS[1]	COLOR SYS[0]	FSCMODE	FSCLOCK	NOBURST	ACCSUB GAIN[1]	ACCSUB GAIN[0]	ACCMAIN GAIN[8]
		ACCMAIN GAIN[7]	ACCMAIN GAIN[6]	ACCMAIN GAIN[5]	ACCMAIN GAIN[4]	ACCMAIN GAIN[3]	ACCMAIN GAIN[2]	ACCMAIN GAIN[1]	ACCMAIN GAIN[0]
	CROMASR2	—	—	—	ISSECAM	ISPAL	ISNTSC	—	—
		LOCK LEVEL[7]	LOCK LEVEL[6]	LOCK LEVEL[5]	LOCK LEVEL[4]	LOCK LEVEL[3]	LOCK LEVEL[2]	LOCK LEVEL[1]	LOCK LEVEL[0]

chanhvinh.com

Module Name	Register Abbreviation	Bit 31/23/15/7	Bit 30/22/14/6	Bit 29/21/13/5	Bit 28/20/12/4	Bit 27/19/11/3	Bit 26/18/10/2	Bit 25/17/9/1	Bit 24/16/8/0
Digital video decoder	SYNCSSR	—	—	—	ISREDUCED	—	—	SYNCDEPTH [9]	SYNCDEPTH [8]
		SYNCDEPTH [7]	SYNCDEPTH [6]	SYNCDEPTH [5]	SYNCDEPTH [4]	SYNCDEPTH [3]	SYNCDEPTH [2]	SYNCDEPTH [1]	SYNCDEPTH [0]
	AGCCSR1	HIGH SAMPLES[7]	HIGH SAMPLES[6]	HIGH SAMPLES[5]	HIGH SAMPLES[4]	HIGH SAMPLES[3]	HIGH SAMPLES[2]	HIGH SAMPLES[1]	HIGH SAMPLES[0]
		PEAK SAMPLES[7]	PEAK SAMPLES[6]	PEAK SAMPLES[5]	PEAK SAMPLES[4]	PEAK SAMPLES[3]	PEAK SAMPLES[2]	PEAK SAMPLES[1]	PEAK SAMPLES[0]
	AGCCSR2	—	—	—	—	—	—	—	AGC CONVERGE
		AGCGAIN[7]	AGCGAIN[6]	AGCGAIN[5]	AGCGAIN[4]	AGCGAIN[3]	AGCGAIN[2]	AGCGAIN[1]	AGCGAIN[0]
	YCSCR3	K15[3]	K15[2]	K15[1]	K15[0]	K13[5]	K13[4]	K13[3]	K13[2]
		K13[1]	K13[0]	K11[5]	K11[4]	K11[3]	K11[2]	K11[1]	K11[0]
	YCSCR4	K16[3]	K16[2]	K16[1]	K16[0]	K14[5]	K14[4]	K14[3]	K14[2]
		K14[1]	K14[0]	K12[5]	K12[4]	K12[3]	K12[2]	K12[1]	K12[0]
	YCSCR5	K22A[7]	K22A[6]	K22A[5]	K22A[4]	K22A[3]	K22A[2]	K22A[1]	K22A[0]
		—	—	K21A[5]	K21A[4]	K21A[3]	K21A[2]	K21A[1]	K21A[0]
	YCSCR6	K22B[7]	K22B[6]	K22B[5]	K22B[4]	K22B[3]	K22B[2]	K22B[1]	K22B[0]
		—	—	K21B[5]	K21B[4]	K21B[3]	K21B[2]	K21B[1]	K21B[0]
	YCSCR7	K23B[3]	K23B[2]	K23B[1]	K23B[0]	K23A[3]	K23A[2]	K23A[1]	K23A[0]
		—	—	—	K24[4]	K24[3]	K24[2]	K24[1]	K24[0]
	YCSCR8	HBPF_ NARROW	HVBPF_ NARROW	HBPF1_ 9TAP_ON	HVBPF1_ 9TAP_ON	HFIL_ TAP_SEL	—	—	—
		—	—	—	—	—	—	—	—
	YCSCR9	DET2_ON	—	—	—	HSEL_MIX_ Y[3]	HSEL_MIX_ Y[2]	HSEL_MIX_ Y[1]	HSEL_MIX_ Y[0]
		VSEL_MIX_ Y[3]	VSEL_MIX_ Y[2]	VSEL_MIX_ Y[1]	VSEL_MIX_ Y[0]	HVSEL_MIX_ Y[3]	HVSEL_MIX_ Y[2]	HVSEL_MIX_ Y[1]	HVSEL_MIX _Y[0]
	YCSCR11	—	—	—	—	—	—	—	V_Y_ LEVEL[8]
		V_Y_ LEVEL[7]	V_Y_ LEVEL[6]	V_Y_ LEVEL[5]	V_Y_ LEVEL[4]	V_Y_ LEVEL[3]	V_Y_ LEVEL[2]	V_Y_ LEVEL[1]	V_Y_ LEVEL[0]

chanhvinh.com

Module Name	Register Abbreviation	Bit 31/23/15/7	Bit 30/22/14/6	Bit 29/21/13/5	Bit 28/20/12/4	Bit 27/19/11/3	Bit 26/18/10/2	Bit 25/17/9/1	Bit 24/16/8/0
Digital video decoder	YCSCR12	DET2_MIX_C[3]	DET2_MIX_C[2]	DET2_MIX_C[1]	DET2_MIX_C[0]	DET2_MIX_Y[3]	DET2_MIX_Y[2]	DET2_MIX_Y[1]	DET2_MIX_Y[0]
		—	—	—	—	FIL2_MODE_2D[1]	FIL2_MODE_2D[0]	—	FIL2_NARROW_2D
	DCPCR9	—	—	—	CLP_HOLD_ON_Y	CLP_HOLD_ON_CB	CLP_HOLD_ON_CR	—	—
		—	—	—	—	—	—	—	—
	YCTWA_F0	—	—	—	FIL2_2D_WA_F0[12]	FIL2_2D_WA_F0[11]	FIL2_2D_WA_F0[10]	FIL2_2D_WA_F0[9]	FIL2_2D_WA_F0[8]
		FIL2_2D_WA_F0[7]	FIL2_2D_WA_F0[6]	FIL2_2D_WA_F0[5]	FIL2_2D_WA_F0[4]	FIL2_2D_WA_F0[3]	FIL2_2D_WA_F0[2]	FIL2_2D_WA_F0[1]	FIL2_2D_WA_F0[0]
	YCTWA_F1	—	—	—	FIL2_2D_WA_F1[12]	FIL2_2D_WA_F1[11]	FIL2_2D_WA_F1[10]	FIL2_2D_WA_F1[9]	FIL2_2D_WA_F1[8]
		FIL2_2D_WA_F1[7]	FIL2_2D_WA_F1[6]	FIL2_2D_WA_F1[5]	FIL2_2D_WA_F1[4]	FIL2_2D_WA_F1[3]	FIL2_2D_WA_F1[2]	FIL2_2D_WA_F1[1]	FIL2_2D_WA_F1[0]
	YCTWA_F2	—	—	—	FIL2_2D_WA_F2[12]	FIL2_2D_WA_F2[11]	FIL2_2D_WA_F2[10]	FIL2_2D_WA_F2[9]	FIL2_2D_WA_F2[8]
		FIL2_2D_WA_F2[7]	FIL2_2D_WA_F2[6]	FIL2_2D_WA_F2[5]	FIL2_2D_WA_F2[4]	FIL2_2D_WA_F2[3]	FIL2_2D_WA_F2[2]	FIL2_2D_WA_F2[1]	FIL2_2D_WA_F2[0]
	YCTWA_F3	—	—	—	FIL2_2D_WA_F3[12]	FIL2_2D_WA_F3[11]	FIL2_2D_WA_F3[10]	FIL2_2D_WA_F3[9]	FIL2_2D_WA_F3[8]
		FIL2_2D_WA_F3[7]	FIL2_2D_WA_F3[6]	FIL2_2D_WA_F3[5]	FIL2_2D_WA_F3[4]	FIL2_2D_WA_F3[3]	FIL2_2D_WA_F3[2]	FIL2_2D_WA_F3[1]	FIL2_2D_WA_F3[0]
	YCTWA_F4	—	—	—	FIL2_2D_WA_F4[12]	FIL2_2D_WA_F4[11]	FIL2_2D_WA_F4[10]	FIL2_2D_WA_F4[9]	FIL2_2D_WA_F4[8]
		FIL2_2D_WA_F4[7]	FIL2_2D_WA_F4[6]	FIL2_2D_WA_F4[5]	FIL2_2D_WA_F4[4]	FIL2_2D_WA_F4[3]	FIL2_2D_WA_F4[2]	FIL2_2D_WA_F4[1]	FIL2_2D_WA_F4[0]
	YCTWA_F5	—	—	—	FIL2_2D_WA_F5[12]	FIL2_2D_WA_F5[11]	FIL2_2D_WA_F5[10]	FIL2_2D_WA_F5[9]	FIL2_2D_WA_F5[8]
		FIL2_2D_WA_F5[7]	FIL2_2D_WA_F5[6]	FIL2_2D_WA_F5[5]	FIL2_2D_WA_F5[4]	FIL2_2D_WA_F5[3]	FIL2_2D_WA_F5[2]	FIL2_2D_WA_F5[1]	FIL2_2D_WA_F5[0]
	YCTWA_F6	—	—	—	FIL2_2D_WA_F6[12]	FIL2_2D_WA_F6[11]	FIL2_2D_WA_F6[10]	FIL2_2D_WA_F6[9]	FIL2_2D_WA_F6[8]
		FIL2_2D_WA_F6[7]	FIL2_2D_WA_F6[6]	FIL2_2D_WA_F6[5]	FIL2_2D WA_F6[4]	FIL2_2D_WA_F6[3]	FIL2_2D_WA_F6[2]	FIL2_2D_WA_F6[1]	FIL2_2D_WA_F6[0]

chanhvinh.com

Module Name	Register Abbreviation	Bit 31/23/15/7	Bit 30/22/14/6	Bit 29/21/13/5	Bit 28/20/12/4	Bit 27/19/11/3	Bit 26/18/10/2	Bit 25/17/9/1	Bit 24/16/8/0
Digital video decoder	YCTWA_F7	—	—	—	FIL2_2D_WA_F7[12]	FIL2_2D_WA_F7[11]	FIL2_2D_WA_F7[10]	FIL2_2D_WA_F7[9]	FIL2_2D_WA_F7[8]
		FIL2_2D_WA_F7[7]	FIL2_2D_WA_F7[6]	FIL2_2D_WA_F7[5]	FIL2_2D_WA_F7[4]	FIL2_2D_WA_F7[3]	FIL2_2D_WA_F7[2]	FIL2_2D_WA_F7[1]	FIL2_2D_WA_F7[0]
	YCTWA_F8	—	—	—	FIL2_2D_WA_F8[12]	FIL2_2D_WA_F8[11]	FIL2_2D_WA_F8[10]	FIL2_2D_WA_F8[9]	FIL2_2D_WA_F8[8]
		FIL2_2D_WA_F8[7]	FIL2_2D_WA_F8[6]	FIL2_2D_WA_F8[5]	FIL2_2D_WA_F8[4]	FIL2_2D_WA_F8[3]	FIL2_2D_WA_F8[2]	FIL2_2D_WA_F8[1]	FIL2_2D_WA_F8[0]
	YCTWB_F0	—	—	—	FIL2_2D_WB_F0[12]	FIL2_2D_WB_F0[11]	FIL2_2D_WB_F0[10]	FIL2_2D_WB_F0[9]	FIL2_2D_WB_F0[8]
		FIL2_2D_WB_F0[7]	FIL2_2D_WB_F0[6]	FIL2_2D_WB_F0[5]	FIL2_2D_WB_F0[4]	FIL2_2D_WB_F0[3]	FIL2_2D_WB_F0[2]	FIL2_2D_WB_F0[1]	FIL2_2D_WB_F0[0]
	YCTWB_F1	—	—	—	FIL2_2D_WB_F1[12]	FIL2_2D_WB_F1[11]	FIL2_2D_WB_F1[10]	FIL2_2D_WB_F1[9]	FIL2_2D_WB_F1[8]
		FIL2_2D_WB_F1[7]	FIL2_2D_WB_F1[6]	FIL2_2D_WB_F1[5]	FIL2_2D_WB_F1[4]	FIL2_2D_WB_F1[3]	FIL2_2D_WB_F1[2]	FIL2_2D_WB_F1[1]	FIL2_2D_WB_F1[0]
	YCTWB_F2	—	—	—	FIL2_2D_WB_F2[12]	FIL2_2D_WB_F2[11]	FIL2_2D_WB_F2[10]	FIL2_2D_WB_F2[9]	FIL2_2D_WB_F2[8]
		FIL2_2D_WB_F2[7]	FIL2_2D_WB_F2[6]	FIL2_2D_WB_F2[5]	FIL2_2D_WB_F2[4]	FIL2_2D_WB_F2[3]	FIL2_2D_WB_F2[2]	FIL2_2D_WB_F2[1]	FIL2_2D_WB_F2[0]
	YCTWB_F3	—	—	—	FIL2_2D_WB_F3[12]	FIL2_2D_WB_F3[11]	FIL2_2D_WB_F3[10]	FIL2_2D_WB_F3[9]	FIL2_2D_WB_F3[8]
		FIL2_2D_WB_F3[7]	FIL2_2D_WB_F3[6]	FIL2_2D_WB_F3[5]	FIL2_2D_WB_F3[4]	FIL2_2D_WB_F3[3]	FIL2_2D_WB_F3[2]	FIL2_2D_WB_F3[1]	FIL2_2D_WB_F3[0]
	YCTWB_F4	—	—	—	FIL2_2D_WB_F4[12]	FIL2_2D_WB_F4[11]	FIL2_2D_WB_F4[10]	FIL2_2D_WB_F4[9]	FIL2_2D_WB_F4[8]
		FIL2_2D_WB_F4[7]	FIL2_2D_WB_F4[6]	FIL2_2D_WB_F4[5]	FIL2_2D_WB_F4[4]	FIL2_2D_WB_F4[3]	FIL2_2D_WB_F4[2]	FIL2_2D_WB_F4[1]	FIL2_2D_WB_F4[0]
	YCTWB_F5	—	—	—	FIL2_2D_WB_F5[12]	FIL2_2D_WB_F5[11]	FIL2_2D_WB_F5[10]	FIL2_2D_WB_F5[9]	FIL2_2D_WB_F5[8]
		FIL2_2D_WB_F5[7]	FIL2_2D_WB_F5[6]	FIL2_2D_WB_F5[5]	FIL2_2D_WB_F5[4]	FIL2_2D_WB_F5[3]	FIL2_2D_WB_F5[2]	FIL2_2D_WB_F5[1]	FIL2_2D_WB_F5[0]
	YCTWB_F6	—	—	—	FIL2_2D_WB_F6[12]	FIL2_2D_WB_F6[11]	FIL2_2D_WB_F6[10]	FIL2_2D_WB_F6[9]	FIL2_2D_WB_F6[8]
		FIL2_2D_WB_F6[7]	FIL2_2D_WB_F6[6]	FIL2_2D_WB_F6[5]	FIL2_2D_WB_F6[4]	FIL2_2D_WB_F6[3]	FIL2_2D_WB_F6[2]	FIL2_2D_WB_F6[1]	FIL2_2D_WB_F6[0]

chanhvinh.com

Module Name	Register Abbreviation	Bit 31/23/15/7	Bit 30/22/14/6	Bit 29/21/13/5	Bit 28/20/12/4	Bit 27/19/11/3	Bit 26/18/10/2	Bit 25/17/9/1	Bit 24/16/8/0
Digital video decoder	YCTWB_F7	—	—	—	FIL2_2D_ WB_F7[12]	FIL2_2D_ WB_F7[11]	FIL2_2D_ WB_F7[10]	FIL2_2D_ WB_F7[9]	FIL2_2D_ WB_F7[8]
		FIL2_2D_ WB_F7[7]	FIL2_2D_ WB_F7[6]	FIL2_2D_ WB_F7[5]	FIL2_2D_ WB_F7[4]	FIL2_2D_ WB_F7[3]	FIL2_2D_ WB_F7[2]	FIL2_2D_ WB_F7[1]	FIL2_2D_ WB_F7[0]
	YCTWB_F8	—	—	—	FIL2_2D_ WB_F8[12]	FIL2_2D_ WB_F8[11]	FIL2_2D_ WB_F8[10]	FIL2_2D_ WB_F8[9]	FIL2_2D_ WB_F8[8]
		FIL2_2D_ WB_F8[7]	FIL2_2D_ WB_F8[6]	FIL2_2D_ WB_F8[5]	FIL2_2D_ WB_F8[4]	FIL2_2D_ WB_F8[3]	FIL2_2D_ WB_F8[2]	FIL2_2D_ WB_F8[1]	FIL2_2D_ B_F8[0]
	YCTNA_F0	—	—	—	FIL2_2D_NA_ F0[12]	FIL2_2D_NA_ F0[11]	FIL2_2D_NA_ F0[10]	FIL2_2D_NA_ F0[9]	FIL2_2D_NA_ F0[8]
		FIL2_2D_NA_ F0[7]	FIL2_2D_NA_ F0[6]	FIL2_2D_NA_ F0[5]	FIL2_2D_NA_ F0[4]	FIL2_2D_NA_ F0[3]	FIL2_2D_NA_ F0[2]	FIL2_2D_NA_ F0[1]	FIL2_2D_NA_ F0[0]
	YCTNA_F1	—	—	—	FIL2_2D_NA_ F1[12]	FIL2_2D_NA_ F1[11]	FIL2_2D_NA_ F1[10]	FIL2_2D_NA_ F1[9]	FIL2_2D_NA_ F1[8]
		FIL2_2D_NA_ F1[7]	FIL2_2D_NA_ F1[6]	FIL2_2D_NA_ F1[5]	FIL2_2D_NA_ F1[4]	FIL2_2D_NA_ F1[3]	FIL2_2D_NA_ F1[2]	FIL2_2D_NA_ F1[1]	FIL2_2D_NA_ F1[0]
	YCTNA_F2	—	—	—	FIL2_2D_NA_ F2[12]	FIL2_2D_NA_ F2[11]	FIL2_2D_NA_ F2[10]	FIL2_2D_NA_ F2[9]	FIL2_2D_NA_ F2[8]
		FIL2_2D_NA_ F2[7]	FIL2_2D_NA_ F2[6]	FIL2_2D_NA_ F2[5]	FIL2_2D_NA_ F2[4]	FIL2_2D_NA_ F2[3]	FIL2_2D_NA_ F2[2]	FIL2_2D_NA_ F2[1]	FIL2_2D_NA_ F2[0]
	YCTNA_F3	—	—	—	FIL2_2D_NA_ F3[12]	FIL2_2D_NA_ F3[11]	FIL2_2D_NA_ F3[10]	FIL2_2D_NA_ F3[9]	FIL2_2D_NA_ F3[8]
		FIL2_2D_NA_ F3[7]	FIL2_2D_NA_ F3[6]	FIL2_2D_NA_ F3[5]	FIL2_2D_NA_ F3[4]	FIL2_2D_NA_ F3[3]	FIL2_2D_NA_ F3[2]	FIL2_2D_NA_ F3[1]	FIL2_2D_NA_ F3[0]
	YCTNA_F4	—	—	—	FIL2_2D_NA_ F4[12]	FIL2_2D_NA_ F4[11]	FIL2_2D_NA_ F4[10]	FIL2_2D_NA_ F4[9]	FIL2_2D_NA_ F4[8]
		FIL2_2D_NA_ F4[7]	FIL2_2D_NA_ F4[6]	FIL2_2D_NA_ F4[5]	FIL2_2D_NA_ F4[4]	FIL2_2D_NA_ F4[3]	FIL2_2D_NA_ F4[2]	FIL2_2D_NA_ F4[1]	FIL2_2D_NA_ F4[0]
	YCTNA_F5	—	—	—	FIL2_2D_NA_ F5[12]	FIL2_2D_NA_ F5[11]	FIL2_2D_NA_ F5[10]	FIL2_2D_NA_ F5[9]	FIL2_2D_NA_ F5[8]
		FIL2_2D_NA_ F5[7]	FIL2_2D_NA_ F5[6]	FIL2_2D_NA_ F5[5]	FIL2_2D_NA_ F5[4]	FIL2_2D_NA_ F5[3]	FIL2_2D_NA_ F5[2]	FIL2_2D_NA_ F5[1]	FIL2_2D_NA_ F5[0]
	YCTNA_F6	—	—	—	FIL2_2D_NA_ F6[12]	FIL2_2D_NA_ F6[11]	FIL2_2D_NA_ F6[10]	FIL2_2D_NA_ F6[9]	FIL2_2D_NA_ F6[8]
		FIL2_2D_NA_ F6[7]	FIL2_2D_NA_ F6[6]	FIL2_2D_NA_ F6[5]	FIL2_2D_NA_ F6[4]	FIL2_2D_NA_ F6[3]	FIL2_2D_NA_ F6[2]	FIL2_2D_NA_ F6[1]	FIL2_2D_NA_ F6[0]

chanhvinh.com

Module Name	Register Abbreviation	Bit 31/23/15/7	Bit 30/22/14/6	Bit 29/21/13/5	Bit 28/20/12/4	Bit 27/19/11/3	Bit 26/18/10/2	Bit 25/17/9/1	Bit 24/16/8/0
Digital video decoder	YCTNA_F7	—	—	—	FIL2_2D_NA_F7[12]	FIL2_2D_NA_F7[11]	FIL2_2D_NA_F7[10]	FIL2_2D_NA_F7[9]	FIL2_2D_NA_F7[8]
		FIL2_2D_NA_F7[7]	FIL2_2D_NA_F7[6]	FIL2_2D_NA_F7[5]	FIL2_2D_NA_F7[4]	FIL2_2D_NA_F7[3]	FIL2_2D_NA_F7[2]	FIL2_2D_NA_F7[1]	FIL2_2D_NA_F7[0]
	YCTNA_F8	—	—	—	FIL2_2D_NA_F8[12]	FIL2_2D_NA_F8[11]	FIL2_2D_NA_F8[10]	FIL2_2D_NA_F8[9]	FIL2_2D_NA_F8[8]
		FIL2_2D_NA_F8[7]	FIL2_2D_NA_F8[6]	FIL2_2D_NA_F8[5]	FIL2_2D_NA_F8[4]	FIL2_2D_NA_F8[3]	FIL2_2D_NA_F8[2]	FIL2_2D_NA_F8[1]	FIL2_2D_NA_F8[0]
	YCTNB_F0	—	—	—	FIL2_2D_NB_F0[12]	FIL2_2D_NB_F0[11]	FIL2_2D_NB_F0[10]	FIL2_2D_NB_F0[9]	FIL2_2D_NB_F0[8]
		FIL2_2D_NB_F0[7]	FIL2_2D_NB_F0[6]	FIL2_2D_NB_F0[5]	FIL2_2D_NB_F0[4]	FIL2_2D_NB_F0[3]	FIL2_2D_NB_F0[2]	FIL2_2D_NB_F0[1]	FIL2_2D_NB_F0[0]
	YCTNB_F1	—	—	—	FIL2_2D_NB_F1[12]	FIL2_2D_NB_F1[11]	FIL2_2D_NB_F1[10]	FIL2_2D_NB_F1[9]	FIL2_2D_NB_F1[8]
		FIL2_2D_NB_F1[7]	FIL2_2D_NB_F1[6]	FIL2_2D_NB_F1[5]	FIL2_2D_NB_F1[4]	FIL2_2D_NB_F1[3]	FIL2_2D_NB_F1[2]	FIL2_2D_NB_F1[1]	FIL2_2D_NB_F1[0]
	YCTNB_F2	—	—	—	FIL2_2D_NB_F2[12]	FIL2_2D_NB_F2[11]	FIL2_2D_NB_F2[10]	FIL2_2D_NB_F2[9]	FIL2_2D_NB_F2[8]
		FIL2_2D_NB_F2[7]	FIL2_2D_NB_F2[6]	FIL2_2D_NB_F2[5]	FIL2_2D_NB_F2[4]	FIL2_2D_NB_F2[3]	FIL2_2D_NB_F2[2]	FIL2_2D_NB_F2[1]	FIL2_2D_NB_F2[0]
	YCTNB_F3	—	—	—	FIL2_2D_NB_F3[12]	FIL2_2D_NB_F3[11]	FIL2_2D_NB_F3[10]	FIL2_2D_NB_F3[9]	FIL2_2D_NB_F3[8]
		FIL2_2D_NB_F3[7]	FIL2_2D_NB_F3[6]	FIL2_2D_NB_F3[5]	FIL2_2D_NB_F3[4]	FIL2_2D_NB_F3[3]	FIL2_2D_NB_F3[2]	FIL2_2D_NB_F3[1]	FIL2_2D_NB_F3[0]
	YCTNB_F4	—	—	—	FIL2_2D_NB_F4[12]	FIL2_2D_NB_F4[11]	FIL2_2D_NB_F4[10]	FIL2_2D_NB_F4[9]	FIL2_2D_NB_F4[8]
		FIL2_2D_NB_F4[7]	FIL2_2D_NB_F4[6]	FIL2_2D_NB_F4[5]	FIL2_2D_NB_F4[4]	FIL2_2D_NB_F4[3]	FIL2_2D_NB_F4[2]	FIL2_2D_NB_F4[1]	FIL2_2D_NB_F4[0]
	YCTNB_F5	—	—	—	FIL2_2D_NB_F5[12]	FIL2_2D_NB_F5[11]	FIL2_2D_NB_F5[10]	FIL2_2D_NB_F5[9]	FIL2_2D_NB_F5[8]
		FIL2_2D_NB_F5[7]	FIL2_2D_NB_F5[6]	FIL2_2D_NB_F5[5]	FIL2_2D_NB_F5[4]	FIL2_2D_NB_F5[3]	FIL2_2D_NB_F5[2]	FIL2_2D_NB_F5[1]	FIL2_2D_NB_F5[0]
	YCTNB_F6	—	—	—	FIL2_2D_NB_F6[12]	FIL2_2D_NB_F6[11]	FIL2_2D_NB_F6[10]	FIL2_2D_NB_F6[9]	FIL2_2D_NB_F6[8]
		FIL2_2D_NB_F6[7]	FIL2_2D_NB_F6[6]	FIL2_2D_NB_F6[5]	FIL2_2D_NB_F6[4]	FIL2_2D_NB_F6[3]	FIL2_2D_NB_F6[2]	FIL2_2D_NB_F6[1]	FIL2_2D_NB_F6[0]

chanhvinh.com

Module Name	Register Abbreviation	Bit 31/23/15/7	Bit 30/22/14/6	Bit 29/21/13/5	Bit 28/20/12/4	Bit 27/19/11/3	Bit 26/18/10/2	Bit 25/17/9/1	Bit 24/16/8/0
Digital video decoder	YCTNB_F7	—	—	—	FIL2_2D_NB_F7[12]	FIL2_2D_NB_F7[11]	FIL2_2D_NB_F7[10]	FIL2_2D_NB_F7[9]	FIL2_2D_NB_F7[8]
		FIL2_2D_NB_F7[7]	FIL2_2D_NB_F7[6]	FIL2_2D_NB_F7[5]	FIL2_2D_NB_F7[4]	FIL2_2D_NB_F7[3]	FIL2_2D_NB_F7[2]	FIL2_2D_NB_F7[1]	FIL2_2D_NB_F7[0]
	YCTNB_F8	—	—	—	FIL2_2D_NB_F8[12]	FIL2_2D_NB_F8[11]	FIL2_2D_NB_F8[10]	FIL2_2D_NB_F8[9]	FIL2_2D_NB_F8[8]
		FIL2_2D_NB_F8[7]	FIL2_2D_NB_F8[6]	FIL2_2D_NB_F8[5]	FIL2_2D_NB_F8[4]	FIL2_2D_NB_F8[3]	FIL2_2D_NB_F8[2]	FIL2_2D_NB_F8[1]	FIL2_2D_NB_F8[0]
	YGAINCR	—	—	—	—	—	—	Y_GAIN2[9]	Y_GAIN2[8]
		Y_GAIN2[7]	Y_GAIN2[6]	Y_GAIN2[5]	Y_GAIN2[4]	Y_GAIN2[3]	Y_GAIN2[2]	Y_GAIN2[1]	Y_GAIN2[0]
	CBGAINCR	—	—	—	—	—	—	CB_GAIN2[9]	CB_GAIN2[8]
		CB_GAIN2[7]	CB_GAIN2[6]	CB_GAIN2[5]	CB_GAIN2[4]	CB_GAIN2[3]	CB_GAIN2[2]	CB_GAIN2[1]	CB_GAIN2[0]
	CRGAINCR	—	—	—	—	—	—	CR_GAIN2[9]	CR_GAIN2[8]
		CR_GAIN2[7]	CR_GAIN2[6]	CR_GAIN2[5]	CR_GAIN2[4]	CR_GAIN2[3]	CR_GAIN2[2]	CR_GAIN2[1]	CR_GAIN2[0]
	PGA_UPDATE	—	—	—	—	—	—	—	—
		—	—	—	—	—	—	—	PGA_VEN
	PGACR	—	—	PGA_GAIN_SEL	PGA_GAIN[4]	PGA_GAIN[3]	PGA_GAIN[2]	PGA_GAIN[1]	PGA_GAIN[0]
		—	—	—	—	—	—	—	—
	ADCCR2	—	—	—	—	—	—	—	—
		—	—	—	—	—	—	—	ADC_VINSEL
Video display controller 4	INP_UPDATE	—	—	—	—	—	—	—	—
		—	—	—	—	—	—	—	—
		—	—	—	—	—	—	—	—
		—	—	—	INP_EXT_UPDATE	—	—	—	INP_IMG_UPDATE
	INP_SEL_CNT	—	—	—	—	—	—	—	—
		—	—	—	INP_SEL	—	—	—	—
		—	INP_FORMAT[2]	INP_FORMAT[1]	INP_FORMAT[0]	—	—	—	INP_PXD_EDGE
		—	—	—	INP_VS_EDGE	—	—	—	INP_HS_EDGE

chanhvinh.com

Module Name	Register Abbreviation	Bit 31/23/15/7	Bit 30/22/14/6	Bit 29/21/13/5	Bit 28/20/12/4	Bit 27/19/11/3	Bit 26/18/10/2	Bit 25/17/9/1	Bit 24/16/8/0
Video display controller 4	INP_EXT_SYNC_CNT	—	—	—	INP_ENDIAN_ON	—	—	—	INP_SWAP_ON
		—	—	—	INP_VS_INV	—	—	—	INP_HS_INV
		—	—	—	—	—	—	—	INP_H_EDGE_SEL
		—	—	—	INP_F525_625	—	—	INP_H_POS[1]	INP_H_POS[0]
	INP_VSYNC_PH_ADJ	—	—	—	—	—	—	INP_FH50[9]	INP_FH50[8]
		INP_FH50[7]	INP_FH50[6]	INP_FH50[5]	INP_FH50[4]	INP_FH50[3]	INP_FH50[2]	INP_FH50[1]	INP_FH50[0]
		—	—	—	—	—	—	INP_FH25[9]	INP_FH25[8]
		INP_FH25[7]	INP_FH25[6]	INP_FH25[5]	INP_FH25[4]	INP_FH25[3]	INP_FH25[2]	INP_FH25[1]	INP_FH25[0]
	INP_DLY_ADJ	—	—	—	—	—	INP_VS_DLY_L[2]	INP_VS_DLY_L[1]	INP_VS_DLY_L[0]
		INP_FLD_DLY[7]	INP_FLD_DLY[6]	INP_FLD_DLY[5]	INP_FLD_DLY[4]	INP_FLD_DLY[3]	INP_FLD_DLY[2]	INP_FLD_DLY[1]	INP_FLD_DLY[0]
		INP_VS_DLY[7]	INP_VS_DLY[6]	INP_VS_DLY[5]	INP_VS_DLY[4]	INP_VS_DLY[3]	INP_VS_DLY[2]	INP_VS_DLY[1]	INP_VS_DLY[0]
		INP_HS_DLY[7]	INP_HS_DLY[6]	INP_HS_DLY[5]	INP_HS_DLY[4]	INP_HS_DLY[3]	INP_HS_DLY[2]	INP_HS_DLY[1]	INP_HS_DLY[0]
	IMGCNT_UPDATE	—	—	—	—	—	—	—	—
		—	—	—	—	—	—	—	—
		—	—	—	—	—	—	—	—
		—	—	—	—	—	—	—	IMGCNT_VEN
	IMGCNT_NR_CNT0	—	—	—	—	—	—	—	—
		—	—	—	NR1D_MD	—	—	—	NR1D_ON
		—	NR1D_Y_TH[6]	NR1D_Y_TH[5]	NR1D_Y_TH[4]	NR1D_Y_TH[3]	NR1D_Y_TH[2]	NR1D_Y_TH[1]	NR1D_Y_TH[0]
		—	—	NR1D_Y_TAP[1]	NR1D_Y_TAP[0]	—	—	NR1D_Y_GAIN[1]	NR1D_Y_GAIN[0]

chanhvinh.com

Module Name	Register Abbreviation	Bit 31/23/15/7	Bit 30/22/14/6	Bit 29/21/13/5	Bit 28/20/12/4	Bit 27/19/11/3	Bit 26/18/10/2	Bit 25/17/9/1	Bit 24/16/8/0
Video display controller 4	IMGCNT_NR_CNT1	—	NR1D_CB_TH[6]	NR1D_CB_TH[5]	NR1D_CB_TH[4]	NR1D_CB_TH[3]	NR1D_CB_TH[2]	NR1D_CB_TH[1]	NR1D_CB_TH[0]
		—	—	NR1D_CB_TAP[1]	NR1D_CB_TAP[0]	—	—	NR1D_CB_GAIN[1]	NR1D_CB_GAIN[0]
		—	NR1D_CR_TH[6]	NR1D_CR_TH[5]	NR1D_CR_TH[4]	NR1D_CR_TH[3]	NR1D_CR_TH[2]	NR1D_CR_TH[1]	NR1D_CR_TH[0]
		—	—	NR1D_CR_TAP[1]	NR1D_CR_TAP[0]	—	—	NR1D_CR_GAIN[1]	NR1D_CR_GAIN[0]
	IMGCNT_MTX_MODE	—	—	—	—	—	—	—	—
		—	—	—	—	—	—	—	—
		—	—	—	—	—	—	—	—
		—	—	—	—	—	—	IMGCNT_MTX_MD[1]	IMGCNT_MTX_MD[0]
	IMGCNT_MTX_YG_ADJ0	—	—	—	—	—	—	—	—
		IMGCNT_MTX_YG[7]	IMGCNT_MTX_YG[6]	IMGCNT_MTX_YG[5]	IMGCNT_MTX_YG[4]	IMGCNT_MTX_YG[3]	IMGCNT_MTX_YG[2]	IMGCNT_MTX_YG[1]	IMGCNT_MTX_YG[0]
		—	—	—	—	—	IMGCNT_MTX_GG[10]	IMGCNT_MTX_GG[9]	IMGCNT_MTX_GG[8]
		IMGCNT_MTX_GG[7]	IMGCNT_MTX_GG[6]	IMGCNT_MTX_GG[5]	IMGCNT_MTX_GG[4]	IMGCNT_MTX_GG[3]	IMGCNT_MTX_GG[2]	IMGCNT_MTX_GG[1]	IMGCNT_MTX_GG[0]
	IMGCNT_MTX_YG_ADJ1	—	—	—	—	—	IMGCNT_MTX_GB[10]	IMGCNT_MTX_GB[9]	IMGCNT_MTX_GB[8]
		IMGCNT_MTX_GB[7]	IMGCNT_MTX_GB[6]	IMGCNT_MTX_GB[5]	IMGCNT_MTX_GB[4]	IMGCNT_MTX_GB[3]	IMGCNT_MTX_GB[2]	IMGCNT_MTX_GB[1]	IMGCNT_MTX_GB[0]
		—	—	—	—	—	IMGCNT_MTX_GR[10]	IMGCNT_MTX_GR[9]	IMGCNT_MTX_GR[8]
		IMGCNT_MTX_GR[7]	IMGCNT_MTX_GR[6]	IMGCNT_MTX_GR[5]	IMGCNT_MTX_GR[4]	IMGCNT_MTX_GR[3]	IMGCNT_MTX_GR[2]	IMGCNT_MTX_GR[1]	IMGCNT_MTX_GR[0]
	IMGCNT_MTX_CBB_ADJ0	—	—	—	—	—	—	—	—
		IMGCNT_MTX_B[7]	IMGCNT_MTX_B[6]	IMGCNT_MTX_B[5]	IMGCNT_MTX_B[4]	IMGCNT_MTX_B[3]	IMGCNT_MTX_B[2]	IMGCNT_MTX_B[1]	IMGCNT_MTX_B[0]
		—	—	—	—	—	IMGCNT_MTX_BG[10]	IMGCNT_MTX_BG[9]	IMGCNT_MTX_BG[8]
		IMGCNT_MTX_BG[7]	IMGCNT_MTX_BG[6]	IMGCNT_MTX_BG[5]	IMGCNT_MTX_BG[4]	IMGCNT_MTX_BG[3]	IMGCNT_MTX_BG[2]	IMGCNT_MTX_BG[1]	IMGCNT_MTX_BG[0]

chanhvinh.com

Module Name	Register Abbreviation	Bit 31/23/15/7	Bit 30/22/14/6	Bit 29/21/13/5	Bit 28/20/12/4	Bit 27/19/11/3	Bit 26/18/10/2	Bit 25/17/9/1	Bit 24/16/8/0
Video display controller 4	IMGCNT_MTX_CBB_ADJ1	—	—	—	—	—	IMGCNT_MTX_BB[10]	IMGCNT_MTX_BB[9]	IMGCNT_MTX_BB[8]
		IMGCNT_MTX_BB[7]	IMGCNT_MTX_BB[6]	IMGCNT_MTX_BB[5]	IMGCNT_MTX_BB[4]	IMGCNT_MTX_BB[3]	IMGCNT_MTX_BB[2]	IMGCNT_MTX_BB[1]	IMGCNT_MTX_BB[0]
		—	—	—	—	—	IMGCNT_MTX_BR[10]	IMGCNT_MTX_BR[9]	IMGCNT_MTX_BR[8]
		IMGCNT_MTX_BR[7]	IMGCNT_MTX_BR[6]	IMGCNT_MTX_BR[5]	IMGCNT_MTX_BR[4]	IMGCNT_MTX_BR[3]	IMGCNT_MTX_BR[2]	IMGCNT_MTX_BR[1]	IMGCNT_MTX_BR[0]
	IMGCNT_MTX_CRR_ADJ0	—	—	—	—	—	—	—	—
		IMGCNT_MTX_R[7]	IMGCNT_MTX_R[6]	IMGCNT_MTX_R[5]	IMGCNT_MTX_R[4]	IMGCNT_MTX_R[3]	IMGCNT_MTX_R[2]	IMGCNT_MTX_R[1]	IMGCNT_MTX_R[0]
		—	—	—	—	—	IMGCNT_MTX_RG[10]	IMGCNT_MTX_RG[9]	IMGCNT_MTX_RG[8]
		IMGCNT_MTX_RG[7]	IMGCNT_MTX_RG[6]	IMGCNT_MTX_RG[5]	IMGCNT_MTX_RG[4]	IMGCNT_MTX_RG[3]	IMGCNT_MTX_RG[2]	IMGCNT_MTX_RG[1]	IMGCNT_MTX_RG[0]
	IMGCNT_MTX_CRR_ADJ1	—	—	—	—	—	IMGCNT_MTX_RB[10]	IMGCNT_MTX_RB[9]	IMGCNT_MTX_RB[8]
		IMGCNT_MTX_RB[7]	IMGCNT_MTX_RB[6]	IMGCNT_MTX_RB[5]	IMGCNT_MTX_RB[4]	IMGCNT_MTX_RB[3]	IMGCNT_MTX_RB[2]	IMGCNT_MTX_RB[1]	IMGCNT_MTX_RB[0]
		—	—	—	—	—	IMGCNT_MTX_RR[10]	IMGCNT_MTX_RR[9]	IMGCNT_MTX_RR[8]
		IMGCNT_MTX_RR[7]	IMGCNT_MTX_RR[6]	IMGCNT_MTX_RR[5]	IMGCNT_MTX_RR[4]	IMGCNT_MTX_RR[3]	IMGCNT_MTX_RR[2]	IMGCNT_MTX_RR[1]	IMGCNT_MTX_RR[0]
	SCL0_UPDATE	—	—	—	—	—	—	—	—
		—	—	—	—	—	—	—	—
		—	—	SCL0_VEN_D	SCL0_VEN_C	—	—	—	SCL0_UPDATE
		—	—	—	SCL0_VEN_B	—	—	—	SCL0_VEN_A
	SCL0_FRC1	RES_VMASK[15]	RES_VMASK[14]	RES_VMASK[13]	RES_VMASK[12]	RES_VMASK[11]	RES_VMASK[10]	RES_VMASK[9]	RES_VMASK[8]
		RES_VMASK[7]	RES_VMASK[6]	RES_VMASK[5]	RES_VMASK[4]	RES_VMASK[3]	RES_VMASK[2]	RES_VMASK[1]	RES_VMASK[0]
		—	—	—	—	—	—	—	—
		—	—	—	—	—	—	—	RES_VMASK_ON

chanhvinh.com

Module Name	Register Abbreviation	Bit 31/23/15/7	Bit 30/22/14/6	Bit 29/21/13/5	Bit 28/20/12/4	Bit 27/19/11/3	Bit 26/18/10/2	Bit 25/17/9/1	Bit 24/16/8/0
Video display controller 4	SCL0_FRC2	RES_ VLACK[15]	RES_ VLACK[14]	RES_ VLACK[13]	RES_ VLACK[12]	RES_ VLACK[11]	RES_ VLACK[10]	RES_ VLACK[9]	RES_ VLACK[8]
		RES_ VLACK[7]	RES_ VLACK[6]	RES_ VLACK[5]	RES_ VLACK[4]	RES_ VLACK[3]	RES_ VLACK[2]	RES_ VLACK[1]	RES_ VLACK[0]
		—	—	—	—	—	—	—	—
		—	—	—	—	—	—	—	RES_VLACK _ON
	SCL0_FRC3	—	—	—	—	—	—	—	—
		—	—	—	—	—	—	—	—
		—	—	—	—	—	—	—	—
		—	—	—	—	—	—	—	RES_VS_ SEL
	SCL0_FRC4	—	—	—	—	—	RES_FV[10]	RES_FV[9]	RES_FV[8]
		RES_FV[7]	RES_FV[6]	RES_FV[5]	RES_FV[4]	RES_FV[3]	RES_FV[2]	RES_FV[1]	RES_FV[0]
		—	—	—	—	—	RES_FH[10]	RES_FH[9]	RES_FH[8]
		RES_FH[7]	RES_FH[6]	RES_FH[5]	RES_FH[4]	RES_FH[3]	RES_FH[2]	RES_FH[1]	RES_FH[0]
	SCL0_FRC5	—	—	—	—	—	—	—	—
		—	—	—	—	—	—	—	—
		—	—	—	—	—	—	—	RES_FLD_ DLY_SEL
		RES_ VSDLY[7]	RES_ VSDLY[6]	RES_ VSDLY[5]	RES_ VSDLY[4]	RES_ VSDLY[3]	RES_ VSDLY[2]	RES_ VSDLY[1]	RES_ VSDLY[0]
	SCL0_FRC6	—	—	—	—	—	RES_ F_VS[10]	RES_ F_VS[9]	RES_ F_VS[8]
		RES_F_VS[7]	RES_F_VS[6]	RES_F_VS[5]	RES_F_VS[4]	RES_F_VS[3]	RES_F_VS[2]	RES_F_VS[1]	RES_F_VS[0]
		—	—	—	—	—	RES_ F_VW[10]	RES_ F_VW[9]	RES_ F_VW[8]
		RES_ F_VW[7]	RES_ F_VW[6]	RES_ F_VW[5]	RES_ F_VW[4]	RES_ F_VW[3]	RES_ F_VW[2]	RES_ F_VW[1]	RES_ F_VW[0]

chanhvinh.com

Module Name	Register Abbreviation	Bit 31/23/15/7	Bit 30/22/14/6	Bit 29/21/13/5	Bit 28/20/12/4	Bit 27/19/11/3	Bit 26/18/10/2	Bit 25/17/9/1	Bit 24/16/8/0
Video display controller 4	SCL0_FRC7	—	—	—	—	—	RES_ F_HS[10]	RES_ F_HS[9]	RES_ F_HS[8]
		RES_ F_HS[7]	RES_ F_HS[6]	RES_ F_HS[5]	RES_ F_HS[4]	RES_ F_HS[3]	RES_ F_HS[2]	RES_ F_HS[1]	RES_ F_HS[0]
		—	—	—	—	—	RES_ F_HW[10]	RES_ F_HW[9]	RES_ F_HW[8]
		RES_ F_HW[7]	RES_ F_HW[6]	RES_ F_HW[5]	RES_ F_HW[4]	RES_ F_HW[3]	RES_ F_HW[2]	RES_ F_HW[1]	RES_ F_HW[0]
	SCL0_FRC9	—	—	—	—	—	—	—	—
		—	—	—	—	—	—	—	—
		—	—	—	—	—	—	—	—
		—	—	—	RES_ QVLOCK	—	—	—	RES_ QVLACK
	SCL0_DS1	—	—	—	—	—	—	—	—
		—	—	—	—	—	—	—	—
		—	—	—	—	—	—	—	—
		—	—	—	RES_DS_V_ ON	—	—	—	RES_DS_H_ ON
	SCL0_DS2	—	—	—	—	—	RES_VS[10]	RES_VS[9]	RES_VS[8]
		RES_VS[7]	RES_VS[6]	RES_VS[5]	RES_VS[4]	RES_VS[3]	RES_VS[2]	RES_VS[1]	RES_VS[0]
		—	—	—	—	—	RES_VW[10]	RES_VW[9]	RES_VW[8]
		RES_VW[7]	RES_VW[6]	RES_VW[5]	RES_VW[4]	RES_VW[3]	RES_VW[2]	RES_VW[1]	RES_VW[0]
	SCL0_DS3	—	—	—	—	—	RES_HS[10]	RES_HS[9]	RES_HS[8]
		RES_HS[7]	RES_HS[6]	RES_HS[5]	RES_HS[4]	RES_HS[3]	RES_HS[2]	RES_HS[1]	RES_HS[0]
		—	—	—	—	—	RES_HW[10]	RES_HW[9]	RES_HW[8]
		RES_HW[7]	RES_HW[6]	RES_HW[5]	RES_HW[4]	RES_HW[3]	RES_HW[2]	RES_HW[1]	RES_HW[0]
	SCL0_DS4	—	—	RES_PFIL_ SEL	RES_DS_H_ INTERPOTYP	—	—	—	—
		—	—	—	—	—	—	—	—
		RES_DS_H_ RATIO[15]	RES_DS_H_ RATIO[14]	RES_DS_H_R ATIO[13]	RES_DS_H_R ATIO[12]	RES_DS_H_R ATIO[11]	RES_DS_H_ RATIO[10]	RES_DS_H_R ATIO[9]	RES_DS_H_ RATIO[8]
		RES_DS_H_ RATIO[7]	RES_DS_H_ RATIO[6]	RES_DS_H_R ATIO[5]	RES_DS_H_R ATIO[4]	RES_DS_H_R ATIO[3]	RES_DS_H_ RATIO[2]	RES_DS_H_R ATIO[1]	RES_DS_H_ RATIO[0]

chanhvinh.com

Module Name	Register Abbreviation	Bit 31/23/15/7	Bit 30/22/14/6	Bit 29/21/13/5	Bit 28/20/12/4	Bit 27/19/11/3	Bit 26/18/10/2	Bit 25/17/9/1	Bit 24/16/8/0
Video display controller 4	SCL0_DS5	—	—	—	RES_V_ INTERPOTYP	RES_TOP_ INIPHASE[11]	RES_TOP_ INIPHASE[10]	RES_TOP_ INIPHASE[9]	RES_TOP_ INIPHASE[8]
		RES_TOP_ INIPHASE[7]	RES_TOP_ INIPHASE[6]	RES_TOP_ INIPHASE[5]	RES_TOP_ INIPHASE[4]	RES_TOP_ INIPHASE[3]	RES_TOP_ INIPHASE[2]	RES_TOP_ INIPHASE[1]	RES_TOP_ INIPHASE[0]
		—	—	—	—	RES_BTM_ INIPHASE[11]	RES_BTM_ INIPHASE[10]	RES_BTM_ INIPHASE[9]	RES_BTM_ INIPHASE[8]
		RES_BTM_ INIPHASE[7]	RES_BTM_ INIPHASE[6]	RES_BTM_ INIPHASE[5]	RES_BTM_ INIPHASE[4]	RES_BTM_ INIPHASE[3]	RES_BTM_ INIPHASE[2]	RES_BTM_ INIPHASE[1]	RES_BTM_ INIPHASE[0]
	SCL0_DS6	—	—	—	—	—	—	—	—
		—	—	—	—	—	—	—	—
		RES_V_ RATIO[15]	RES_V_ RATIO[14]	RES_V_ RATIO[13]	RES_V_ RATIO[12]	RES_V_ RATIO[11]	RES_V_ RATIO[10]	RES_V_ RATIO[9]	RES_V_ RATIO[8]
		RES_V_ RATIO[7]	RES_V_ RATIO[6]	RES_V_ RATIO[5]	RES_V_ RATIO[4]	RES_V_ RATIO[3]	RES_V_ RATIO[2]	RES_V_ RATIO[1]	RES_V_ RATIO[0]
	SCL0_DS7	—	—	—	—	—	RES_OUT_ VW[10]	RES_OUT_ VW[9]	RES_OUT_ VW[8]
		RES_OUT_ VW[7]	RES_OUT_ VW[6]	RES_OUT_ VW[5]	RES_OUT_ VW[4]	RES_OUT_ VW[3]	RES_OUT_ VW[2]	RES_OUT_ VW[1]	RES_OUT_ VW[0]
		—	—	—	—	—	RES_OUT_ HW[10]	RES_OUT_ HW[9]	RES_OUT_ HW[8]
		RES_OUT_ HW[7]	RES_OUT_ HW[6]	RES_OUT_ HW[5]	RES_OUT_ HW[4]	RES_OUT_ HW[3]	RES_OUT_ HW[2]	RES_OUT_ HW[1]	RES_OUT_ HW[0]
	SCL0_US1	—	—	—	—	—	—	—	—
		—	—	—	—	—	—	—	—
		—	—	—	—	—	—	—	—
		—	—	—	RES_US_V_ ON	—	—	—	RES_US_H_ ON
	SCL0_US2	—	—	—	—	—	RES_P_VS[10]	RES_P_VS[9]	RES_P_VS[8]
		RES_P_VS[7]	RES_P_VS[6]	RES_P_VS[5]	RES_P_VS[4]	RES_P_VS[3]	RES_P_VS[2]	RES_P_VS[1]	RES_P_VS[0]
		—	—	—	—	—	RES_P_ VW[10]	RES_P_ VW[9]	RES_P_ VW[8]
		RES_P_ VW[7]	RES_P_ VW[6]	RES_P_ VW[5]	RES_P_ VW[4]	RES_P_ VW[3]	RES_P_ VW[2]	RES_P_ VW[1]	RES_P_ VW[0]

chanhvinh.com

Module Name	Register Abbreviation	Bit 31/23/15/7	Bit 30/22/14/6	Bit 29/21/13/5	Bit 28/20/12/4	Bit 27/19/11/3	Bit 26/18/10/2	Bit 25/17/9/1	Bit 24/16/8/0
Video display controller 4	SCL0_US3	—	—	—	—	—	RES_P_HS[10]	RES_P_HS[9]	RES_P_HS[8]
		RES_P_HS[7]	RES_P_HS[6]	RES_P_HS[5]	RES_P_HS[4]	RES_P_HS[3]	RES_P_HS[2]	RES_P_HS[1]	RES_P_HS[0]
		—	—	—	—	—	RES_P_HW[10]	RES_P_HW[9]	RES_P_HW[8]
		RES_P_HW[7]	RES_P_HW[6]	RES_P_HW[5]	RES_P_HW[4]	RES_P_HW[3]	RES_P_HW[2]	RES_P_HW[1]	RES_P_HW[0]
	SCL0_US4	—	—	—	—	—	RES_IN_VW[10]	RES_IN_VW[9]	RES_IN_VW[8]
		RES_IN_VW[7]	RES_IN_VW[6]	RES_IN_VW[5]	RES_IN_VW[4]	RES_IN_VW[3]	RES_IN_VW[2]	RES_IN_VW[1]	RES_IN_VW[0]
		—	—	—	—	—	RES_IN_HW[10]	RES_IN_HW[9]	RES_IN_HW[8]
		RES_IN_HW[7]	RES_IN_HW[6]	RES_IN_HW[5]	RES_IN_HW[4]	RES_IN_HW[3]	RES_IN_HW[2]	RES_IN_HW[1]	RES_IN_HW[0]
	SCL0_US5	—	—	—	—	—	—	—	—
		—	—	—	—	—	—	—	—
		RES_US_H_RATIO[15]	RES_US_H_RATIO[14]	RES_US_H_RATIO[13]	RES_US_H_RATIO[12]	RES_US_H_RATIO[11]	RES_US_H_RATIO[10]	RES_US_H_RATIO[9]	RES_US_H_RATIO[8]
		RES_US_H_RATIO[7]	RES_US_H_RATIO[6]	RES_US_H_RATIO[5]	RES_US_H_RATIO[4]	RES_US_H_RATIO[3]	RES_US_H_RATIO[2]	RES_US_H_RATIO[1]	RES_US_H_RATIO[0]
	SCL0_US6	—	—	—	RES_US_H_INTERPOTYP	RES_US_HT_INIPHASE[11]	RES_US_HT_INIPHASE[10]	RES_US_HT_INIPHASE[9]	RES_US_HT_INIPHASE[8]
		RES_US_HT_INIPHASE[7]	RES_US_HT_INIPHASE[6]	RES_US_HT_INIPHASE[5]	RES_US_HT_INIPHASE[4]	RES_US_HT_INIPHASE[3]	RES_US_HT_INIPHASE[2]	RES_US_HT_INIPHASE[1]	RES_US_HT_INIPHASE[0]
		—	—	—	—	RES_US_HB_INIPHASE[11]	RES_US_HB_INIPHASE[10]	RES_US_HB_INIPHASE[9]	RES_US_HB_INIPHASE[8]
		RES_US_HB_INIPHASE[7]	RES_US_HB_INIPHASE[6]	RES_US_HB_INIPHASE[5]	RES_US_HB_INIPHASE[4]	RES_US_HB_INIPHASE[3]	RES_US_HB_INIPHASE[2]	RES_US_HB_INIPHASE[1]	RES_US_HB_INIPHASE[0]
	SCL0_US7	—	—	—	—	—	—	—	—
		—	—	—	—	—	—	—	—
		RES_HCUT[7]	RES_HCUT[6]	RES_HCUT[5]	RES_HCUT[4]	RES_HCUT[3]	RES_HCUT[2]	RES_HCUT[1]	RES_HCUT[0]
		RES_VCUT[7]	RES_VCUT[6]	RES_VCUT[5]	RES_VCUT[4]	RES_VCUT[3]	RES_VCUT[2]	RES_VCUT[1]	RES_VCUT[0]

chanhvinh.com

Module Name	Register Abbreviation	Bit 31/23/15/7	Bit 30/22/14/6	Bit 29/21/13/5	Bit 28/20/12/4	Bit 27/19/11/3	Bit 26/18/10/2	Bit 25/17/9/1	Bit 24/16/8/0
Video display controller 4	SCL0_US8	—	—	—	—	—	—	—	—
		—	—	—	—	—	—	—	—
		—	—	—	—	—	—	—	—
		—	—	—	RES_IBUS_SYNC_SEL	—	—	—	RES_DISP_ON
	SCL0_OVR1	—	—	—	—	—	—	—	—
		RES_BK_COL_R[7]	RES_BK_COL_R[6]	RES_BK_COL_R[5]	RES_BK_COL_R[4]	RES_BK_COL_R[3]	RES_BK_COL_R[2]	RES_BK_COL_R[1]	RES_BK_COL_R[0]
		RES_BK_COL_G[7]	RES_BK_COL_G[6]	RES_BK_COL_G[5]	RES_BK_COL_G[4]	RES_BK_COL_G[3]	RES_BK_COL_G[2]	RES_BK_COL_G[1]	RES_BK_COL_G[0]
		RES_BK_COL_B[7]	RES_BK_COL_B[6]	RES_BK_COL_B[5]	RES_BK_COL_B[4]	RES_BK_COL_B[3]	RES_BK_COL_B[2]	RES_BK_COL_B[1]	RES_BK_COL_B[0]
	SCL1_UPDATE	—	—	—	—	—	—	—	—
		—	—	—	—	—	—	—	—
		—	—	—	—	—	—	—	—
		—	—	—	SCL1_VEN_B	—	—	—	SCL1_VEN_A
	SCL1_WR1	—	—	—	—	—	—	—	—
		—	—	—	—	—	—	—	—
		—	—	—	—	—	—	—	—
		—	RES_DS_WR_MD[2]	RES_DS_WR_MD[1]	RES_DS_WR_MD[0]	RES_MD[1]	RES_MD[0]	RES_LOOP	RES_BST_MD
	SCL1_WR2	RES_BASE[31]	RES_BASE[30]	RES_BASE[29]	RES_BASE[28]	RES_BASE[27]	RES_BASE[26]	RES_BASE[25]	RES_BASE[24]
		RES_BASE[23]	RES_BASE[22]	RES_BASE[21]	RES_BASE[20]	RES_BASE[19]	RES_BASE[18]	RES_BASE[17]	RES_BASE[16]
		RES_BASE[15]	RES_BASE[14]	RES_BASE[13]	RES_BASE[12]	RES_BASE[11]	RES_BASE[10]	RES_BASE[9]	RES_BASE[8]
		RES_BASE[7]	RES_BASE[6]	RES_BASE[5]	RES_BASE[4]	RES_BASE[3]	RES_BASE[2]	RES_BASE[1]	RES_BASE[0]

chanhvinh.com

Module Name	Register Abbreviation	Bit 31/23/15/7	Bit 30/22/14/6	Bit 29/21/13/5	Bit 28/20/12/4	Bit 27/19/11/3	Bit 26/18/10/2	Bit 25/17/9/1	Bit 24/16/8/0
Video display controller 4	SCL1_WR3	—	RES_LN_ OFF[14]	RES_LN_ OFF[13]	RES_LN_ OFF[12]	RES_LN_ OFF[11]	RES_LN_ OFF[10]	RES_LN_ OFF[9]	RES_LN_ OFF[8]
		RES_LN_ OFF[7]	RES_LN_ OFF[6]	RES_LN_ OFF[5]	RES_LN_ OFF[4]	RES_LN_ OFF[3]	RES_LN_ OFF[2]	RES_LN_ OFF[1]	RES_LN_ OFF[0]
		—	—	—	—	—	—	RES_FLM_ NUM[9]	RES_FLM_ NUM[8]
		RES_FLM_ NUM[7]	RES_FLM_ NUM[6]	RES_FLM_ NUM[5]	RES_FLM_ NUM[4]	RES_FLM_ NUM[3]	RES_FLM_ NUM[2]	RES_FLM_ NUM[1]	RES_FLM_ NUM[0]
	SCL1_WR4	—	—	—	—	—	—	—	—
		—	RES_FLM_ OFF[22]	RES_FLM_ OFF[21]	RES_FLM_ OFF[20]	RES_FLM_ OFF[19]	RES_FLM_ OFF[18]	RES_FLM_ OFF[17]	RES_FLM_ OFF[16]
		RES_FLM_ OFF[15]	RES_FLM_ OFF[14]	RES_FLM_ OFF[13]	RES_FLM_ OFF[12]	RES_FLM_ OFF[11]	RES_FLM_ OFF[10]	RES_FLM_ OFF[9]	RES_FLM_ OFF[8]
		RES_FLM_ OFF[7]	RES_FLM_ OFF[6]	RES_FLM_ OFF[5]	RES_FLM_ OFF[4]	RES_FLM_ OFF[3]	RES_FLM_ OFF[2]	RES_FLM_ OFF[1]	RES_FLM_ OFF[0]
	SCL1_WR5	—	—	—	—	—	—	—	—
		—	—	—	—	—	—	—	—
		—	—	—	RES_INTER	—	—	RES_FS_ RATE[1]	RES_FS_ RATE[0]
		—	—	—	RES_FLD_ SEL	—	—	—	RES_WENB
	SCL1_WR6	—	—	—	—	—	—	—	—
		—	—	—	—	—	—	—	—
		—	—	—	—	—	—	—	—
		—	—	—	RES_DTH_ ON	—	—	—	RES_ BITDEC_ON
	SCL1_WR7	—	—	—	—	—	—	—	—
		—	—	—	—	—	—	—	RES_OVERF LOW
		—	—	—	—	—	—	RES_FLM_ CNT[9]	RES_FLM_ CNT[8]
		RES_FLM_ CNT[7]	RES_FLM_ CNT[6]	RES_FLM_ CNT[5]	RES_FLM_ CNT[4]	RES_FLM_ CNT[3]	RES_FLM_ CNT[2]	RES_FLM_ CNT[1]	RES_FLM_ CNT[0]

chanhvinh.com

Module Name	Register Abbreviation	Bit 31/23/15/7	Bit 30/22/14/6	Bit 29/21/13/5	Bit 28/20/12/4	Bit 27/19/11/3	Bit 26/18/10/2	Bit 25/17/9/1	Bit 24/16/8/0
Video display controller 4	GR1_UPDATE	—	—	—	—	—	—	—	—
		—	—	—	—	—	—	—	—
		—	—	—	—	—	—	—	—
		—	—	—	GR1_P_VEN	—	—	—	GR1_IBUS_VEN
	GR1_FLM_RD	—	—	—	—	—	—	—	—
		—	—	—	—	—	—	—	—
		—	—	—	—	—	—	—	—
		—	—	—	—	—	—	—	GR1_R_ENB
	GR1_FLM1	—	—	—	—	—	—	—	—
		—	—	—	—	—	—	—	GR1_LN_OFF_DIR
		—	—	—	—	—	—	GR1_FLM_SEL[1]	GR1_FLM_SEL[0]
		—	—	—	GR1_IMR_FLM_INV	—	—	—	GR1_BST_MD
	GR1_FLM2	GR1_BASE[31]	GR1_BASE[30]	GR1_BASE[29]	GR1_BASE[28]	GR1_BASE[27]	GR1_BASE[26]	GR1_BASE[25]	GR1_BASE[24]
		GR1_BASE[23]	GR1_BASE[22]	GR1_BASE[21]	GR1_BASE[20]	GR1_BASE[19]	GR1_BASE[18]	GR1_BASE[17]	GR1_BASE[16]
		GR1_BASE[15]	GR1_BASE[14]	GR1_BASE[13]	GR1_BASE[12]	GR1_BASE[11]	GR1_BASE[10]	GR1_BASE[9]	GR1_BASE[8]
		GR1_BASE[7]	GR1_BASE[6]	GR1_BASE[5]	GR1_BASE[4]	GR1_BASE[3]	GR1_BASE[2]	GR1_BASE[1]	GR1_BASE[0]
	GR1_FLM3	—	GR1_LN_OFF[14]	GR1_LN_OFF[13]	GR1_LN_OFF[12]	GR1_LN_OFF[11]	GR1_LN_OFF[10]	GR1_LN_OFF[9]	GR1_LN_OFF[8]
		GR1_LN_OFF[7]	GR1_LN_OFF[6]	GR1_LN_OFF[5]	GR1_LN_OFF[4]	GR1_LN_OFF[3]	GR1_LN_OFF[2]	GR1_LN_OFF[1]	GR1_LN_OFF[0]
		—	—	—	—	—	—	GR1_FLM_NUM[9]	GR1_FLM_NUM[8]
		GR1_FLM_NUM[7]	GR1_FLM_NUM[6]	GR1_FLM_NUM[5]	GR1_FLM_NUM[4]	GR1_FLM_NUM[3]	GR1_FLM_NUM[2]	GR1_FLM_NUM[1]	GR1_FLM_NUM[0]

chanhvinh.com

Module Name	Register Abbreviation	Bit 31/23/15/7	Bit 30/22/14/6	Bit 29/21/13/5	Bit 28/20/12/4	Bit 27/19/11/3	Bit 26/18/10/2	Bit 25/17/9/1	Bit 24/16/8/0
Video display controller 4	GR1_FLM4	—	—	—	—	—	—	—	—
		—	GR1_FLM_OFF[22]	GR1_FLM_OFF[21]	GR1_FLM_OFF[20]	GR1_FLM_OFF[19]	GR1_FLM_OFF[18]	GR1_FLM_OFF[17]	GR1_FLM_OFF[16]
		GR1_FLM_OFF[15]	GR1_FLM_OFF[14]	GR1_FLM_OFF[13]	GR1_FLM_OFF[12]	GR1_FLM_OFF[11]	GR1_FLM_OFF[10]	GR1_FLM_OFF[9]	GR1_FLM_OFF[8]
		GR1_FLM_OFF[7]	GR1_FLM_OFF[6]	GR1_FLM_OFF[5]	GR1_FLM_OFF[4]	GR1_FLM_OFF[3]	GR1_FLM_OFF[2]	GR1_FLM_OFF[1]	GR1_FLM_OFF[0]
	GR1_FLM5	—	—	—	—	—	—	GR1_FLM_LNUM[9]	GR1_FLM_LNUM[8]
		GR1_FLM_LNUM[7]	GR1_FLM_LNUM[6]	GR1_FLM_LNUM[5]	GR1_FLM_LNUM[4]	GR1_FLM_LNUM[3]	GR1_FLM_LNUM[2]	GR1_FLM_LNUM[1]	GR1_FLM_LNUM[0]
		—	—	—	—	—	—	GR1_FLM_LOOP[9]	GR1_FLM_LOOP[8]
		GR1_FLM_LOOP[7]	GR1_FLM_LOOP[6]	GR1_FLM_LOOP[5]	GR1_FLM_LOOP[4]	GR1_FLM_LOOP[3]	GR1_FLM_LOOP[2]	GR1_FLM_LOOP[1]	GR1_FLM_LOOP[0]
	GR1_FLM6	GR1_FORMAT[3]	GR1_FORMAT[2]	GR1_FORMAT[1]	GR1_FORMAT[0]	—	—	GR1_HW[9]	GR1_HW[8]
		GR1_HW[7]	GR1_HW[6]	GR1_HW[5]	GR1_HW[4]	GR1_HW[3]	GR1_HW[2]	GR1_HW[1]	GR1_HW[0]
		GR1_YCC_SWAP[2]	GR1_YCC_SWAP[1]	GR1_YCC_SWAP[0]	GR1_ENDIAN_ON	—	—	—	GR1_CNV444_MD
		—	—	GR1_STA_POS[5]	GR1_STA_POS[4]	GR1_STA_POS[3]	GR1_STA_POS[2]	GR1_STA_POS[1]	GR1_STA_POS[0]
	GR1_AB1	—	—	—	—	—	—	—	—
		—	—	—	—	—	—	—	—
		—	—	—	—	—	—	—	—
		—	—	—	GR1_GRC_DISP_ON	—	—	GR1_DISP_SEL[1]	GR1_DISP_SEL[0]
	GR1_AB2	—	—	—	—	—	GR1_GRC_VS[10]	GR1_GRC_VS[9]	GR1_GRC_VS[8]
		GR1_GRC_VS[7]	GR1_GRC_VS[6]	GR1_GRC_VS[5]	GR1_GRC_VS[4]	GR1_GRC_VS[3]	GR1_GRC_VS[2]	GR1_GRC_VS[1]	GR1_GRC_VS[0]
		—	—	—	—	—	GR1_GRC_VW[10]	GR1_GRC_VW[9]	GR1_GRC_VW[8]
		GR1_GRC_VW[7]	GR1_GRC_VW[6]	GR1_GRC_VW[5]	GR1_GRC_VW[4]	GR1_GRC_VW[3]	GR1_GRC_VW[2]	GR1_GRC_VW[1]	GR1_GRC_VW[0]

chanhvinh.com

Module Name	Register Abbreviation	Bit 31/23/15/7	Bit 30/22/14/6	Bit 29/21/13/5	Bit 28/20/12/4	Bit 27/19/11/3	Bit 26/18/10/2	Bit 25/17/9/1	Bit 24/16/8/0
Video display controller 4	GR1_AB3	—	—	—	—	—	GR1_GRC_HS[10]	GR1_GRC_HS[9]	GR1_GRC_HS[8]
		GR1_GRC_HS[7]	GR1_GRC_HS[6]	GR1_GRC_HS[5]	GR1_GRC_HS[4]	GR1_GRC_HS[3]	GR1_GRC_HS[2]	GR1_GRC_HS[1]	GR1_GRC_HS[0]
		—	—	—	—	—	GR1_GRC_HW[10]	GR1_GRC_HW[9]	GR1_GRC_HW[8]
		GR1_GRC_HW[7]	GR1_GRC_HW[6]	GR1_GRC_HW[5]	GR1_GRC_HW[4]	GR1_GRC_HW[3]	GR1_GRC_HW[2]	GR1_GRC_HW[1]	GR1_GRC_HW[0]
	GR1_AB7	—	—	—	—	—	—	—	—
		—	—	—	—	—	—	—	—
		—	—	—	—	—	—	—	—
		—	—	—	—	—	—	—	GR1_CK_ON
	GR1_AB8	GR1_CK_KCLUT[7]	GR1_CK_KCLUT[6]	GR1_CK_KCLUT[5]	GR1_CK_KCLUT[4]	GR1_CK_KCLUT[3]	GR1_CK_KCLUT[2]	GR1_CK_KCLUT[1]	GR1_CK_KCLUT[0]
		GR1_CK_KG[7]	GR1_CK_KG[6]	GR1_CK_KG[5]	GR1_CK_KG[4]	GR1_CK_KG[3]	GR1_CK_KG[2]	GR1_CK_KG[1]	GR1_CK_KG[0]
		GR1_CK_KB[7]	GR1_CK_KB[6]	GR1_CK_KB[5]	GR1_CK_KB[4]	GR1_CK_KB[3]	GR1_CK_KB[2]	GR1_CK_KB[1]	GR1_CK_KB[0]
		GR1_CK_KR[7]	GR1_CK_KR[6]	GR1_CK_KR[5]	GR1_CK_KR[4]	GR1_CK_KR[3]	GR1_CK_KR[2]	GR1_CK_KR[1]	GR1_CK_KR[0]
	GR1_AB9	GR1_CK_A[7]	GR1_CK_A[6]	GR1_CK_A[5]	GR1_CK_A[4]	GR1_CK_A[3]	GR1_CK_A[2]	GR1_CK_A[1]	GR1_CK_A[0]
		GR1_CK_G[7]	GR1_CK_G[6]	GR1_CK_G[5]	GR1_CK_G[4]	GR1_CK_G[3]	GR1_CK_G[2]	GR1_CK_G[1]	GR1_CK_G[0]
		GR1_CK_B[7]	GR1_CK_B[6]	GR1_CK_B[5]	GR1_CK_B[4]	GR1_CK_B[3]	GR1_CK_B[2]	GR1_CK_B[1]	GR1_CK_B[0]
		GR1_CK_R[7]	GR1_CK_R[6]	GR1_CK_R[5]	GR1_CK_R[4]	GR1_CK_R[3]	GR1_CK_R[2]	GR1_CK_R[1]	GR1_CK_R[0]
	GR1_AB10	GR1_A0[7]	GR1_A0[6]	GR1_A0[5]	GR1_A0[4]	GR1_A0[3]	GR1_A0[2]	GR1_A0[1]	GR1_A0[0]
		GR1_G0[7]	GR1_G0[6]	GR1_G0[5]	GR1_G0[4]	GR1_G0[3]	GR1_G0[2]	GR1_G0[1]	GR1_G0[0]
		GR1_B0[7]	GR1_B0[6]	GR1_B0[5]	GR1_B0[4]	GR1_B0[3]	GR1_B0[2]	GR1_B0[1]	GR1_B0[0]
		GR1_R0[7]	GR1_R0[6]	GR1_R0[5]	GR1_R0[4]	GR1_R0[3]	GR1_R0[2]	GR1_R0[1]	GR1_R0[0]
	GR1_AB11	GR1_A1[7]	GR1_A1[6]	GR1_A1[5]	GR1_A1[4]	GR1_A1[3]	GR1_A1[2]	GR1_A1[1]	GR1_A1[0]
		GR1_G1[7]	GR1_G1[6]	GR1_G1[5]	GR1_G1[4]	GR1_G1[3]	GR1_G1[2]	GR1_G1[1]	GR1_G1[0]
		GR1_B1[7]	GR1_B1[6]	GR1_B1[5]	GR1_B1[4]	GR1_B1[3]	GR1_B1[2]	GR1_B1[1]	GR1_B1[0]
		GR1_R1[7]	GR1_R1[6]	GR1_R1[5]	GR1_R1[4]	GR1_R1[3]	GR1_R1[2]	GR1_R1[1]	GR1_R1[0]

chanhvinh.com

Module Name	Register Abbreviation	Bit 31/23/15/7	Bit 30/22/14/6	Bit 29/21/13/5	Bit 28/20/12/4	Bit 27/19/11/3	Bit 26/18/10/2	Bit 25/17/9/1	Bit 24/16/8/0
Video display controller 4	GR1_BASE	—	—	—	—	—	—	—	—
		GR1_BASE_G[7]	GR1_BASE_G[6]	GR1_BASE_G[5]	GR1_BASE_G[4]	GR1_BASE_G[3]	GR1_BASE_G[2]	GR1_BASE_G[1]	GR1_BASE_G[0]
		GR1_BASE_B[7]	GR1_BASE_B[6]	GR1_BASE_B[5]	GR1_BASE_B[4]	GR1_BASE_B[3]	GR1_BASE_B[2]	GR1_BASE_B[1]	GR1_BASE_B[0]
		GR1_BASE_R[7]	GR1_BASE_R[6]	GR1_BASE_R[5]	GR1_BASE_R[4]	GR1_BASE_R[3]	GR1_BASE_R[2]	GR1_BASE_R[1]	GR1_BASE_R[0]
	GR1_CLUT	—	—	—	—	—	—	—	—
		—	—	—	—	—	—	—	GR1_CLT_SEL
		—	—	—	—	—	—	—	—
		—	—	—	—	—	—	—	—
	ADJ_UPDATE	—	—	—	—	—	—	—	—
		—	—	—	—	—	—	—	—
		—	—	—	—	—	—	—	—
		—	—	—	—	—	—	—	ADJ_VEN
	ADJ_BKSTR_SET	—	—	—	—	—	—	—	BKSTR_ON
		BKSTR_ST[3]	BKSTR_ST[2]	BKSTR_ST[1]	BKSTR_ST[0]	BKSTR_D[3]	BKSTR_D[2]	BKSTR_D[1]	BKSTR_D[0]
		—	—	—	BKSTR_T1[4]	BKSTR_T1[3]	BKSTR_T1[2]	BKSTR_T1[1]	BKSTR_T1[0]
		—	—	—	BKSTR_T2[4]	BKSTR_T2[3]	BKSTR_T2[2]	BKSTR_T2[1]	BKSTR_T2[0]
	ADJ_ENH_TIM1	—	—	—	—	—	—	—	—
		—	—	—	—	—	—	—	—
		—	—	—	—	—	—	—	—
		—	—	—	ENH_MD	—	—	—	ENH_DISP_ON
	ADJ_ENH_TIM2	—	—	—	—	—	ENH_VS[10]	ENH_VS[9]	ENH_VS[8]
		ENH_VS[7]	ENH_VS[6]	ENH_VS[5]	ENH_VS[4]	ENH_VS[3]	ENH_VS[2]	ENH_VS[1]	ENH_VS[0]
		—	—	—	—	—	ENH_VW[10]	ENH_VW[9]	ENH_VW[8]
		ENH_VW[7]	ENH_VW[6]	ENH_VW[5]	ENH_VW[4]	ENH_VW[3]	ENH_VW[2]	ENH_VW[1]	ENH_VW[0]
	ADJ_ENH_TIM3	—	—	—	—	—	ENH_HS[10]	ENH_HS[9]	ENH_HS[8]
		ENH_HS[7]	ENH_HS[6]	ENH_HS[5]	ENH_HS[4]	ENH_HS[3]	ENH_HS[2]	ENH_HS[1]	ENH_HS[0]
		—	—	—	—	—	ENH_HW[10]	ENH_HW[9]	ENH_HW[8]
		ENH_HW[7]	ENH_HW[6]	ENH_HW[5]	ENH_HW[4]	ENH_HW[3]	ENH_HW[2]	ENH_HW[1]	ENH_HW[0]

chanhvinh.com

Module Name	Register Abbreviation	Bit 31/23/15/7	Bit 30/22/14/6	Bit 29/21/13/5	Bit 28/20/12/4	Bit 27/19/11/3	Bit 26/18/10/2	Bit 25/17/9/1	Bit 24/16/8/0
Video display controller 4	ADJ_ENH_SHP1	—	—	—	—	—	—	—	—
		—	—	—	—	—	—	—	SHP_H_ON
		—	—	—	—	—	—	—	—
		—	SHP_H1_CORE[6]	SHP_H1_CORE[5]	SHP_H1_CORE[4]	SHP_H1_CORE[3]	SHP_H1_CORE[2]	SHP_H1_CORE[1]	SHP_H1_CORE[0]
	ADJ_ENH_SHP2	SHP_H1_CLIP_O[7]	SHP_H1_CLIP_O[6]	SHP_H1_CLIP_O[5]	SHP_H1_CLIP_O[4]	SHP_H1_CLIP_O[3]	SHP_H1_CLIP_O[2]	SHP_H1_CLIP_O[1]	SHP_H1_CLIP_O[0]
		SHP_H1_CLIP_U[7]	SHP_H1_CLIP_U[6]	SHP_H1_CLIP_U[5]	SHP_H1_CLIP_U[4]	SHP_H1_CLIP_U[3]	SHP_H1_CLIP_U[2]	SHP_H1_CLIP_U[1]	SHP_H1_CLIP_U[0]
		SHP_H1_GAIN_O[7]	SHP_H1_GAIN_O[6]	SHP_H1_GAIN_O[5]	SHP_H1_GAIN_O[4]	SHP_H1_GAIN_O[3]	SHP_H1_GAIN_O[2]	SHP_H1_GAIN_O[1]	SHP_H1_GAIN_O[0]
		SHP_H1_GAIN_U[7]	SHP_H1_GAIN_U[6]	SHP_H1_GAIN_U[5]	SHP_H1_GAIN_U[4]	SHP_H1_GAIN_U[3]	SHP_H1_GAIN_U[2]	SHP_H1_GAIN_U[1]	SHP_H1_GAIN_U[0]
	ADJ_ENH_SHP3	—	—	—	—	—	—	—	—
		—	—	—	—	—	—	—	SHP_H2_LPF_SEL
		—	—	—	—	—	—	—	—
		—	SHP_H2_CORE[6]	SHP_H2_CORE[5]	SHP_H2_CORE[4]	SHP_H2_CORE[3]	SHP_H2_CORE[2]	SHP_H2_CORE[1]	SHP_H2_CORE[0]
	ADJ_ENH_SHP4	SHP_H2_CLIP_O[7]	SHP_H2_CLIP_O[6]	SHP_H2_CLIP_O[5]	SHP_H2_CLIP_O[4]	SHP_H2_CLIP_O[3]	SHP_H2_CLIP_O[2]	SHP_H2_CLIP_O[1]	SHP_H2_CLIP_O[0]
		SHP_H2_CLIP_U[7]	SHP_H2_CLIP_U[6]	SHP_H2_CLIP_U[5]	SHP_H2_CLIP_U[4]	SHP_H2_CLIP_U[3]	SHP_H2_CLIP_U[2]	SHP_H2_CLIP_U[1]	SHP_H2_CLIP_U[0]
		SHP_H2_GAIN_O[7]	SHP_H2_GAIN_O[6]	SHP_H2_GAIN_O[5]	SHP_H2_GAIN_O[4]	SHP_H2_GAIN_O[3]	SHP_H2_GAIN_O[2]	SHP_H2_GAIN_O[1]	SHP_H2_GAIN_O[0]
		SHP_H2_GAIN_U[7]	SHP_H2_GAIN_U[6]	SHP_H2_GAIN_U[5]	SHP_H2_GAIN_U[4]	SHP_H2_GAIN_U[3]	SHP_H2_GAIN_U[2]	SHP_H2_GAIN_U[1]	SHP_H2_GAIN_U[0]
	ADJ_ENH_SHP5	—	—	—	—	—	—	—	—
		—	—	—	—	—	—	—	—
		—	—	—	—	—	—	—	—
		—	SHP_H3_CORE[6]	SHP_H3_CORE[5]	SHP_H3_CORE[4]	SHP_H3_CORE[3]	SHP_H3_CORE[2]	SHP_H3_CORE[1]	SHP_H3_CORE[0]

chanhvinh.com

Module Name	Register Abbreviation	Bit 31/23/15/7	Bit 30/22/14/6	Bit 29/21/13/5	Bit 28/20/12/4	Bit 27/19/11/3	Bit 26/18/10/2	Bit 25/17/9/1	Bit 24/16/8/0
Video display controller 4	ADJ_ENH_SHP6	SHP_H3_CLIP_O[7]	SHP_H3_CLIP_O[6]	SHP_H3_CLIP_O[5]	SHP_H3_CLIP_O[4]	SHP_H3_CLIP_O[3]	SHP_H3_CLIP_O[2]	SHP_H3_CLIP_O[1]	SHP_H3_CLIP_O[0]
		SHP_H3_CLIP_U[7]	SHP_H3_CLIP_U[6]	SHP_H3_CLIP_U[5]	SHP_H3_CLIP_U[4]	SHP_H3_CLIP_U[3]	SHP_H3_CLIP_U[2]	SHP_H3_CLIP_U[1]	SHP_H3_CLIP_U[0]
		SHP_H3_GAIN_O[7]	SHP_H3_GAIN_O[6]	SHP_H3_GAIN_O[5]	SHP_H3_GAIN_O[4]	SHP_H3_GAIN_O[3]	SHP_H3_GAIN_O[2]	SHP_H3_GAIN_O[1]	SHP_H3_GAIN_O[0]
		SHP_H3_GAIN_U[7]	SHP_H3_GAIN_U[6]	SHP_H3_GAIN_U[5]	SHP_H3_GAIN_U[4]	SHP_H3_GAIN_U[3]	SHP_H3_GAIN_U[2]	SHP_H3_GAIN_U[1]	SHP_H3_GAIN_U[0]
	ADJ_ENH_LTI1	LTI_H_ON	—	—	—	—	—	—	LTI_H2_LPF_SEL
		LTI_H2_INC_ZERO[7]	LTI_H2_INC_ZERO[6]	LTI_H2_INC_ZERO[5]	LTI_H2_INC_ZERO[4]	LTI_H2_INC_ZERO[3]	LTI_H2_INC_ZERO[2]	LTI_H2_INC_ZERO[1]	LTI_H2_INC_ZERO[0]
		LTI_H2_GAIN[7]	LTI_H2_GAIN[6]	LTI_H2_GAIN[5]	LTI_H2_GAIN[4]	LTI_H2_GAIN[3]	LTI_H2_GAIN[2]	LTI_H2_GAIN[1]	LTI_H2_GAIN[0]
		LTI_H2_CORE[7]	LTI_H2_CORE[6]	LTI_H2_CORE[5]	LTI_H2_CORE[4]	LTI_H2_CORE[3]	LTI_H2_CORE[2]	LTI_H2_CORE[1]	LTI_H2_CORE[0]
	ADJ_ENH_LTI2	—	—	—	—	—	—	—	LTI_H4_MEDIAN_TAP_SEL
		LTI_H4_INC_ZERO[7]	LTI_H4_INC_ZERO[6]	LTI_H4_INC_ZERO[5]	LTI_H4_INC_ZERO[4]	LTI_H4_INC_ZERO[3]	LTI_H4_INC_ZERO[2]	LTI_H4_INC_ZERO[1]	LTI_H4_INC_ZERO[0]
		LTI_H4_GAIN[7]	LTI_H4_GAIN[6]	LTI_H4_GAIN[5]	LTI_H4_GAIN[4]	LTI_H4_GAIN[3]	LTI_H4_GAIN[2]	LTI_H4_GAIN[1]	LTI_H4_GAIN[0]
		LTI_H4_CORE[7]	LTI_H4_CORE[6]	LTI_H4_CORE[5]	LTI_H4_CORE[4]	LTI_H4_CORE[3]	LTI_H4_CORE[2]	LTI_H4_CORE[1]	LTI_H4_CORE[0]
	ADJ_MTX_MODE	—	—	—	—	—	—	—	—
		—	—	—	—	—	—	—	—
		—	—	—	—	—	—	—	—
		—	—	—	—	—	—	ADJ_MTX_MD[1]	ADJ_MTX_MD[0]
	ADJ_MTX_YG_ADJ0	—	—	—	—	—	—	—	—
		ADJ_MTX_YG[7]	ADJ_MTX_YG[6]	ADJ_MTX_YG[5]	ADJ_MTX_YG[4]	ADJ_MTX_YG[3]	ADJ_MTX_YG[2]	ADJ_MTX_YG[1]	ADJ_MTX_YG[0]
		—	—	—	—	—	ADJ_MTX_GG[10]	ADJ_MTX_GG[9]	ADJ_MTX_GG[8]
		ADJ_MTX_GG[7]	ADJ_MTX_GG[6]	ADJ_MTX_GG[5]	ADJ_MTX_GG[4]	ADJ_MTX_GG[3]	ADJ_MTX_GG[2]	ADJ_MTX_GG[1]	ADJ_MTX_GG[0]

chanhvinh.com

Module Name	Register Abbreviation	Bit 31/23/15/7	Bit 30/22/14/6	Bit 29/21/13/5	Bit 28/20/12/4	Bit 27/19/11/3	Bit 26/18/10/2	Bit 25/17/9/1	Bit 24/16/8/0
Video display controller 4	ADJ_MTX_YG_ADJ1	—	—	—	—	—	ADJ_MTX_GB[10]	ADJ_MTX_GB[9]	ADJ_MTX_GB[8]
		ADJ_MTX_GB[7]	ADJ_MTX_GB[6]	ADJ_MTX_GB[5]	ADJ_MTX_GB[4]	ADJ_MTX_GB[3]	ADJ_MTX_GB[2]	ADJ_MTX_GB[1]	ADJ_MTX_GB[0]
		—	—	—	—	—	ADJ_MTX_GR[10]	ADJ_MTX_GR[9]	ADJ_MTX_GR[8]
		ADJ_MTX_GR[7]	ADJ_MTX_GR[6]	ADJ_MTX_GR[5]	ADJ_MTX_GR[4]	ADJ_MTX_GR[3]	ADJ_MTX_GR[2]	ADJ_MTX_GR[1]	ADJ_MTX_GR[0]
	ADJ_MTX_CBB_ADJ0	—	—	—	—	—	—	—	—
		ADJ_MTX_B[7]	ADJ_MTX_B[6]	ADJ_MTX_B[5]	ADJ_MTX_B[4]	ADJ_MTX_B[3]	ADJ_MTX_B[2]	ADJ_MTX_B[1]	ADJ_MTX_B[0]
		—	—	—	—	—	ADJ_MTX_BG[10]	ADJ_MTX_BG[9]	ADJ_MTX_BG[8]
		ADJ_MTX_BG[7]	ADJ_MTX_BG[6]	ADJ_MTX_BG[5]	ADJ_MTX_BG[4]	ADJ_MTX_BG[3]	ADJ_MTX_BG[2]	ADJ_MTX_BG[1]	ADJ_MTX_BG[0]
	ADJ_MTX_CBB_ADJ1	—	—	—	—	—	ADJ_MTX_BB[10]	ADJ_MTX_BB[9]	ADJ_MTX_BB[8]
		ADJ_MTX_BB[7]	ADJ_MTX_BB[6]	ADJ_MTX_BB[5]	ADJ_MTX_BB[4]	ADJ_MTX_BB[3]	ADJ_MTX_BB[2]	ADJ_MTX_BB[1]	ADJ_MTX_BB[0]
		—	—	—	—	—	ADJ_MTX_BR[10]	ADJ_MTX_BR[9]	ADJ_MTX_BR[8]
		ADJ_MTX_BR[7]	ADJ_MTX_BR[6]	ADJ_MTX_BR[5]	ADJ_MTX_BR[4]	ADJ_MTX_BR[3]	ADJ_MTX_BR[2]	ADJ_MTX_BR[1]	ADJ_MTX_BR[0]
	ADJ_MTX_CRR_ADJ0	—	—	—	—	—	—	—	—
		ADJ_MTX_R[7]	ADJ_MTX_R[6]	ADJ_MTX_R[5]	ADJ_MTX_R[4]	ADJ_MTX_R[3]	ADJ_MTX_R[2]	ADJ_MTX_R[1]	ADJ_MTX_R[0]
		—	—	—	—	—	ADJ_MTX_RG[10]	ADJ_MTX_RG[9]	ADJ_MTX_RG[8]
		ADJ_MTX_RG[7]	ADJ_MTX_RG[6]	ADJ_MTX_RG[5]	ADJ_MTX_RG[4]	ADJ_MTX_RG[3]	ADJ_MTX_RG[2]	ADJ_MTX_RG[1]	ADJ_MTX_RG[0]

chanhvinh.com

Module Name	Register Abbreviation	Bit 31/23/15/7	Bit 30/22/14/6	Bit 29/21/13/5	Bit 28/20/12/4	Bit 27/19/11/3	Bit 26/18/10/2	Bit 25/17/9/1	Bit 24/16/8/0
Video display controller 4	ADJ_MTX_ CRR_ADJ1	—	—	—	—	—	ADJ_MTX_ RB[10]	ADJ_MTX_ RB[9]	ADJ_MTX_ RB[8]
		ADJ_MTX_ RB[7]	ADJ_MTX_ RB[6]	ADJ_MTX_ RB[5]	ADJ_MTX_ RB[4]	ADJ_MTX_ RB[3]	ADJ_MTX_ RB[2]	ADJ_MTX_ RB[1]	ADJ_MTX_ RB[0]
		—	—	—	—	—	ADJ_MTX_ RR[10]	ADJ_MTX_ RR[9]	ADJ_MTX_ RR[8]
		ADJ_MTX_ RR[7]	ADJ_MTX_ RR[6]	ADJ_MTX_ RR[5]	ADJ_MTX_ RR[4]	ADJ_MTX_ RR[3]	ADJ_MTX_ RR[2]	ADJ_MTX_ RR[1]	ADJ_MTX_ RR[0]
	GR2_UPDATE	—	—	—	—	—	—	—	—
		—	—	—	—	—	—	—	—
		—	—	—	—	—	—	—	—
		—	—	—	GR2_P_VEN	—	—	—	GR2_IBUS_ VEN
	GR2_FLM_RD	—	—	—	—	—	—	—	—
		—	—	—	—	—	—	—	—
		—	—	—	—	—	—	—	—
		—	—	—	—	—	—	—	GR2_R_ENB
	GR2_FLM1	—	—	—	—	—	—	—	—
		—	—	—	—	—	—	—	GR2_LN_ OFF_DIR
		—	—	—	—	—	—	GR2_FLM_ SEL[1]	GR2_FLM_ SEL[0]
		—	—	—	—	—	—	—	GR2_BST_ MD
	GR2_FLM2	GR2_ BASE[31]	GR2_ BASE[30]	GR2_ BASE[29]	GR2_ BASE[28]	GR2_ BASE[27]	GR2_ BASE[26]	GR2_ BASE[25]	GR2_ BASE[24]
		GR2_ BASE[23]	GR2_ BASE[22]	GR2 _BASE[21]	GR2_ BASE[20]	GR2_ BASE[19]	GR2_ BASE[18]	GR2_ BASE[17]	GR2_ BASE[16]
		GR2_ BASE[15]	GR2_ BASE[14]	GR2_ BASE[13]	GR2_ BASE[12]	GR2_ BASE[11]	GR2_ BASE[10]	GR2_ BASE[9]	GR2_ BASE[8]
		GR2_ BASE[7]	GR2_ BASE[6]	GR2_ BASE[5]	GR2_ BASE[4]	GR2_ BASE[3]	GR2_ BASE[2]	GR2_ BASE[1]	GR2_ BASE[0]

chanhvinh.com

Module Name	Register Abbreviation	Bit 31/23/15/7	Bit 30/22/14/6	Bit 29/21/13/5	Bit 28/20/12/4	Bit 27/19/11/3	Bit 26/18/10/2	Bit 25/17/9/1	Bit 24/16/8/0
Video display controller 4	GR2_FLM3	—	GR2_LN_OFF[14]	GR2_LN_OFF[13]	GR2_LN_OFF[12]	GR2_LN_OFF[11]	GR2_LN_OFF[10]	GR2_LN_OFF[9]	GR2_LN_OFF[8]
		GR2_LN_OFF[7]	GR2_LN_OFF[6]	GR2_LN_OFF[5]	GR2_LN_OFF[4]	GR2_LN_OFF[3]	GR2_LN_OFF[2]	GR2_LN_OFF[1]	GR2_LN_OFF[0]
		—	—	—	—	—	—	GR2_FLM_NUM[9]	GR2_FLM_NUM[8]
		GR2_FLM_NUM[7]	GR2_FLM_NUM[6]	GR2_FLM_NUM[5]	GR2_FLM_NUM[4]	GR2_FLM_NUM[3]	GR2_FLM_NUM[2]	GR2_FLM_NUM[1]	GR2_FLM_NUM[0]
	GR2_FLM4	—	—	—	—	—	—	—	—
		—	GR2_FLM_OFF[22]	GR2_FLM_OFF[21]	GR2_FLM_OFF[20]	GR2_FLM_OFF[19]	GR2_FLM_OFF[18]	GR2_FLM_OFF[17]	GR2_FLM_OFF[16]
		GR2_FLM_OFF[15]	GR2_FLM_OFF[14]	GR2_FLM_OFF[13]	GR2_FLM_OFF[12]	GR2_FLM_OFF[11]	GR2_FLM_OFF[10]	GR2_FLM_OFF[9]	GR2_FLM_OFF[8]
		GR2_FLM_OFF[7]	GR2_FLM_OFF[6]	GR2_FLM_OFF[5]	GR2_FLM_OFF[4]	GR2_FLM_OFF[3]	GR2_FLM_OFF[2]	GR2_FLM_OFF[1]	GR2_FLM_OFF[0]
	GR2_FLM5	—	—	—	—	—	—	GR2_FLM_LNUM[9]	GR2_FLM_LNUM[8]
		GR2_FLM_LNUM[7]	GR2_FLM_LNUM[6]	GR2_FLM_LNUM[5]	GR2_FLM_LNUM[4]	GR2_FLM_LNUM[3]	GR2_FLM_LNUM[2]	GR2_FLM_LNUM[1]	GR2_FLM_LNUM[0]
		—	—	—	—	—	—	GR2_FLM_LOOP[9]	GR2_FLM_LOOP[8]
		GR2_FLM_LOOP[7]	GR2_FLM_LOOP[6]	GR2_FLM_LOOP[5]	GR2_FLM_LOOP[4]	GR2_FLM_LOOP[3]	GR2_FLM_LOOP[2]	GR2_FLM_LOOP[1]	GR2_FLM_LOOP[0]
	GR2_FLM6	GR2_FORMAT[3]	GR2_FORMAT[2]	GR2_FORMAT[1]	GR2_FORMAT[0]	—	—	GR2_HW[9]	GR2_HW[8]
		GR2_HW[7]	GR2_HW[6]	GR2_HW[5]	GR2_HW[4]	GR2_HW[3]	GR2_HW[2]	GR2_HW[1]	GR2_HW[0]
		—	—	—	GR2_ENDIAN_ON	—	—	—	—
		—	—	GR2_STA_POS[5]	GR2_STA_POS[4]	GR2_STA_POS[3]	GR2_STA_POS[2]	GR2_STA_POS[1]	GR2_STA_POS[0]
	GR2_AB1	—	—	—	—	—	—	—	—
		—	—	—	—	—	—	—	—
		—	—	—	GR2_ARC_ON	—	—	—	GR2_ARC_DISP_ON
		—	—	—	GR2_GRC_DISP_ON	—	—	GR2_DISP_SEL[1]	GR2_DISP_SEL[0]

chanhvinh.com

Module Name	Register Abbreviation	Bit 31/23/15/7	Bit 30/22/14/6	Bit 29/21/13/5	Bit 28/20/12/4	Bit 27/19/11/3	Bit 26/18/10/2	Bit 25/17/9/1	Bit 24/16/8/0
Video display controller 4	GR2_AB2	—	—	—	—	—	GR2_GRC_VS[10]	GR2_GRC_VS[9]	GR2_GRC_VS[8]
		GR2_GRC_VS[7]	GR2_GRC_VS[6]	GR2_GRC_VS[5]	GR2_GRC_VS[4]	GR2_GRC_VS[3]	GR2_GRC_VS[2]	GR2_GRC_VS[1]	GR2_GRC_VS[0]
		—	—	—	—	—	GR2_GRC_VW[10]	GR2_GRC_VW[9]	GR2_GRC_VW[8]
		GR2_GRC_VW[7]	GR2_GRC_VW[6]	GR2_GRC_VW[5]	GR2_GRC_VW[4]	GR2_GRC_VW[3]	GR2_GRC_VW[2]	GR2_GRC_VW[1]	GR2_GRC_VW[0]
	GR2_AB3	—	—	—	—	—	GR2_GRC_HS[10]	GR2_GRC_HS[9]	GR2_GRC_HS[8]
		GR2_GRC_HS[7]	GR2_GRC_HS[6]	GR2_GRC_HS[5]	GR2_GRC_HS[4]	GR2_GRC_HS[3]	GR2_GRC_HS[2]	GR2_GRC_HS[1]	GR2_GRC_HS[0]
		—	—	—	—	—	GR2_GRC_HW[10]	GR2_GRC_HW[9]	GR2_GRC_HW[8]
		GR2_GRC_HW[7]	GR2_GRC_HW[6]	GR2_GRC_HW[5]	GR2_GRC_HW[4]	GR2_GRC_HW[3]	GR2_GRC_HW[2]	GR2_GRC_HW[1]	GR2_GRC_HW[0]
	GR2_AB4	—	—	—	—	—	GR2_ARC_VS[10]	GR2_ARC_VS[9]	GR2_ARC_VS[8]
		GR2_ARC_VS[7]	GR2_ARC_VS[6]	GR2_ARC_VS[5]	GR2_ARC_VS[4]	GR2_ARC_VS[3]	GR2_ARC_VS[2]	GR2_ARC_VS[1]	GR2_ARC_VS[0]
		—	—	—	—	—	GR2_ARC_VW[10]	GR2_ARC_VW[9]	GR2_ARC_VW[8]
		GR2_ARC_VW[7]	GR2_ARC_VW[6]	GR2_ARC_VW[5]	GR2_ARC_VW[4]	GR2_ARC_VW[3]	GR2_ARC_VW[2]	GR2_ARC_VW[1]	GR2_ARC_VW[0]
	GR2_AB5	—	—	—	—	—	GR2_ARC_HS[10]	GR2_ARC_HS[9]	GR2_ARC_HS[8]
		GR2_ARC_HS[7]	GR2_ARC_HS[6]	GR2_ARC_HS[5]	GR2_ARC_HS[4]	GR2_ARC_HS[3]	GR2_ARC_HS[2]	GR2_ARC_HS[1]	GR2_ARC_HS[0]
		—	—	—	—	—	GR2_ARC_HW[10]	GR2_ARC_HW[9]	GR2_ARC_HW[8]
		GR2_ARC_HW[7]	GR2_ARC_HW[6]	GR2_ARC_HW[5]	GR2_ARC_HW[4]	GR2_ARC_HW[3]	GR2_ARC_HW[2]	GR2_ARC_HW[1]	GR2_ARC_HW[0]

chanhvinh.com

Module Name	Register Abbreviation	Bit 31/23/15/7	Bit 30/22/14/6	Bit 29/21/13/5	Bit 28/20/12/4	Bit 27/19/11/3	Bit 26/18/10/2	Bit 25/17/9/1	Bit 24/16/8/0
Video display controller 4	GR2_AB6	—	—	—	—	—	—	—	GR2_ARC_MODE
		GR2_ARC_COEF[7]	GR2_ARC_COEF[6]	GR2_ARC_COEF[5]	GR2_ARC_COEF[4]	GR2_ARC_COEF[3]	GR2_ARC_COEF[2]	GR2_ARC_COEF[1]	GR2_ARC_COEF[0]
		—	—	—	—	—	—	—	—
		GR2_ARC_RATE[7]	GR2_ARC_RATE[6]	GR2_ARC_RATE[5]	GR2_ARC_RATE[4]	GR2_ARC_RATE[3]	GR2_ARC_RATE[2]	GR2_ARC_RATE[1]	GR2_ARC_RATE[0]
	GR2_AB7	—	—	—	—	—	—	—	—
		GR2_ARC_DEF[7]	GR2_ARC_DEF[6]	GR2_ARC_DEF[5]	GR2_ARC_DEF[4]	GR2_ARC_DEF[3]	GR2_ARC_EF[2]	GR2_ARC_DEF[1]	GR2_ARC_DEF[0]
		—	—	—	—	—	—	—	—
		—	—	—	—	—	—	—	GR2_CK_ON
	GR2_AB8	GR2_CK_KCLUT[7]	GR2_CK_KCLUT[6]	GR2_CK_KCLUT[5]	GR2_CK_KCLUT[4]	GR2_CK_KCLUT[3]	GR2_CK_KCLUT[2]	GR2_CK_KCLUT[1]	GR2_CK_KCLUT[0]
		GR2_CK_KG[7]	GR2_CK_KG[6]	GR2_CK_KG[5]	GR2_CK_KG[4]	GR2_CK_KG[3]	GR2_CK_KG[2]	GR2_CK_KG[1]	GR2_CK_KG[0]
		GR2_CK_KB[7]	GR2_CK_KB[6]	GR2_CK_KB[5]	GR2_CK_KB[4]	GR2_CK_KB[3]	GR2_CK_KB[2]	GR2_CK_KB[1]	GR2_CK_KB[0]
		GR2_CK_KR[7]	GR2_CK_KR[6]	GR2_CK_KR[5]	GR2_CK_KR[4]	GR2_CK_KR[3]	GR2_CK_KR[2]	GR2_CK_KR[1]	GR2_CK_KR[0]
	GR2_AB9	GR2_CK_A[7]	GR2_CK_A[6]	GR2_CK_A[5]	GR2_CK_A[4]	GR2_CK_A[3]	GR2_CK_A[2]	GR2_CK_A[1]	GR2_CK_A[0]
		GR2_CK_G[7]	GR2_CK_G[6]	GR2_CK_G[5]	GR2_CK_G[4]	GR2_CK_G[3]	GR2_CK_G[2]	GR2_CK_G[1]	GR2_CK_G[0]
		GR2_CK_B[7]	GR2_CK_B[6]	GR2_CK_B[5]	GR2_CK_B[4]	GR2_CK_B[3]	GR2_CK_B[2]	GR2_CK_B[1]	GR2_CK_B[0]
		GR2_CK_R[7]	GR2_CK_R[6]	GR2_CK_R[5]	GR2_CK_R[4]	GR2_CK_R[3]	GR2_CK_R[2]	GR2_CK_R[1]	GR2_CK_R[0]
	GR2_AB10	GR2_A0[7]	GR2_A0[6]	GR2_A0[5]	GR2_A0[4]	GR2_A0[3]	GR2_A0[2]	GR2_A0[1]	GR2_A0[0]
		GR2_G0[7]	GR2_G0[6]	GR2_G0[5]	GR2_G0[4]	GR2_G0[3]	GR2_G0[2]	GR2_G0[1]	GR2_G0[0]
		GR2_B0[7]	GR2_B0[6]	GR2_B0[5]	GR2_B0[4]	GR2_B0[3]	GR2_B0[2]	GR2_B0[1]	GR2_B0[0]
		GR2_R0[7]	GR2_R0[6]	GR2_R0[5]	GR2_R0[4]	GR2_R0[3]	GR2_R0[2]	GR2_R0[1]	GR2_R0[0]
	GR2_AB11	GR2_A1[7]	GR2_A1[6]	GR2_A1[5]	GR2_A1[4]	GR2_A1[3]	GR2_A1[2]	GR2_A1[1]	GR2_A1[0]
		GR2_G1[7]	GR2_G1[6]	GR2_G1[5]	GR2_G1[4]	GR2_G1[3]	GR2_G1[2]	GR2_G1[1]	GR2_G1[0]
		GR2_B1[7]	GR2_B1[6]	GR2_B1[5]	GR2_B1[4]	GR2_B1[3]	GR2_B1[2]	GR2_B1[1]	GR2_B1[0]
		GR2_R1[7]	GR2_R1[6]	GR2_R1[5]	GR2_R1[4]	GR2_R1[3]	GR2_R1[2]	GR2_R1[1]	GR2_R1[0]

chanhvinh.com

Module Name	Register Abbreviation	Bit 31/23/15/7	Bit 30/22/14/6	Bit 29/21/13/5	Bit 28/20/12/4	Bit 27/19/11/3	Bit 26/18/10/2	Bit 25/17/9/1	Bit 24/16/8/0
Video display controller 4	GR2_BASE	—	—	—	—	—	—	—	—
		GR2_BASE_G[7]	GR2_BASE_G[6]	GR2_BASE_G[5]	GR2_BASE_G[4]	GR2_BASE_G[3]	GR2_BASE_G[2]	GR2_BASE_G[1]	GR2_BASE_G[0]
		GR2_BASE_B[7]	GR2_BASE_B[6]	GR2_BASE_B[5]	GR2_BASE_B[4]	GR2_BASE_B[3]	GR2_BASE_B[2]	GR2_BASE_B[1]	GR2_BASE_B[0]
		GR2_BASE_R[7]	GR2_BASE_R[6]	GR2_BASE_R[5]	GR2_BASE_R[4]	GR2_BASE_R[3]	GR2_BASE_R[2]	GR2_BASE_R[1]	GR2_BASE_R[0]
	GR2_CLUT	—	—	—	—	—	—	—	—
		—	—	—	—	—	—	—	GR2_CLT_SEL
		—	—	—	—	—	—	—	—
		—	—	—	—	—	—	—	—
	GR2_MON	—	—	—	—	—	—	—	—
		—	—	—	—	—	—	—	—
		—	—	—	—	—	—	—	—
		—	—	—	—	—	—	—	GR2_ARC_ST
	GR3_UPDATE	—	—	—	—	—	—	—	—
		—	—	—	—	—	—	—	—
		—	—	—	—	—	—	—	—
		—	—	—	GR3_P_VEN	—	—	—	GR3_IBUS_VEN
	GR3_FLM_RD	—	—	—	—	—	—	—	—
		—	—	—	—	—	—	—	—
		—	—	—	—	—	—	—	—
		—	—	—	—	—	—	—	GR3_R_ENB
	GR3_FLM1	—	—	—	—	—	—	—	—
		—	—	—	—	—	—	—	GR3_LN_OFF_DIR
		—	—	—	—	—	—	GR3_FLM_SEL[1]	GR3_FLM_SEL[0]
		—	—	—	—	—	—	—	GR3_BST_MD

chanhvinh.com

Module Name	Register Abbreviation	Bit 31/23/15/7	Bit 30/22/14/6	Bit 29/21/13/5	Bit 28/20/12/4	Bit 27/19/11/3	Bit 26/18/10/2	Bit 25/17/9/1	Bit 24/16/8/0
Video display controller 4	GR3_FLM2	GR3_ BASE[31]	GR3_ BASE[30]	GR3_ BASE[29]	GR3_ BASE[28]	GR3_ BASE[27]	GR3_ BASE[26]	GR3_ BASE[25]	GR3_ BASE[24]
		GR3_ BASE[23]	GR3_ BASE[22]	GR3_ BASE[21]	GR3_ BASE[20]	GR3_ BASE[19]	GR3_ BASE[18]	GR3_ BASE[17]	GR3_ BASE[16]
		GR3_ BASE[15]	GR3_ BASE[14]	GR3_ BASE[13]	GR3_ BASE[12]	GR3_ BASE[11]	GR3_ BASE[10]	GR3_ BASE[9]	GR3_ BASE[8]
		GR3_ BASE[7]	GR3_ BASE[6]	GR3_ BASE[5]	GR3_ BASE[4]	GR3_ BASE[3]	GR3_ BASE[2]	GR3_ BASE[1]	GR3_ BASE[0]
	GR3_FLM3	—	GR3_LN_ OFF[14]	GR3_LN_ OFF[13]	GR3_LN_ OFF[12]	GR3_LN_ OFF[11]	GR3_LN_ OFF[10]	GR3_LN_ OFF[9]	GR3_LN_ OFF[8]
		GR3_LN_ OFF[7]	GR3_LN_ OFF[6]	GR3_LN_ OFF[5]	GR3_LN_ OFF[4]	GR3_LN_ OFF[3]	GR3_LN_ OFF[2]	GR3_LN_ OFF[1]	GR3_LN_ OFF[0]
		—	—	—	—	—	—	GR3_FLM_ NUM[9]	GR3_FLM_ NUM[8]
		GR3_FLM_ NUM[7]	GR3_FLM_ NUM[6]	GR3_FLM_ NUM[5]	GR3_FLM_ NUM[4]	GR3_FLM_ NUM[3]	GR3_FLM_ NUM[2]	GR3_FLM_ NUM[1]	GR3_FLM_ NUM[0]
	GR3_FLM4	—	—	—	—	—	—	—	—
		—	GR3_FLM_ OFF[22]	GR3_FLM_ OFF[21]	GR3_FLM_ OFF[20]	GR3_FLM_ OFF[19]	GR3_FLM_ OFF[18]	GR3_FLM_ OFF[17]	GR3_FLM_ OFF[16]
		GR3_FLM_ OFF[15]	GR3_FLM_ OFF[14]	GR3_FLM_ OFF[13]	GR3_FLM_ OFF[12]	GR3_FLM_ OFF[11]	GR3_FLM_ OFF[10]	GR3_FLM_ OFF[9]	GR3_FLM_ OFF[8]
		GR3_FLM_ OFF[7]	GR3_FLM_ OFF[6]	GR3_FLM_ OFF[5]	GR3_FLM_ OFF[4]	GR3_FLM_ OFF[3]	GR3_FLM_ OFF[2]	GR3_FLM_ OFF[1]	GR3_FLM_ OFF[0]
	GR3_FLM5	—	—	—	—	—	—	GR3_FLM_ LNUM[9]	GR3_FLM_ LNUM[8]
		GR3_FLM_ LNUM[7]	GR3_FLM_ LNUM[6]	GR3_FLM_ LNUM[5]	GR3_FLM_ LNUM[4]	GR3_FLM_ LNUM[3]	GR3_FLM_ LNUM[2]	GR3_FLM_ LNUM[1]	GR3_FLM_ LNUM[0]
		—	—	—	—	—	—	GR3_FLM_ LOOP[9]	GR3_FLM_ LOOP[8]
		GR3_FLM_ LOOP[7]	GR3_FLM_ LOOP[6]	GR3_FLM_ LOOP[5]	GR3_FLM_ LOOP[4]	GR3_FLM_ LOOP[3]	GR3_FLM_ LOOP[2]	GR3_FLM_ LOOP[1]	GR3_FLM_ LOOP[0]

chanhvinh.com

Module Name	Register Abbreviation	Bit 31/23/15/7	Bit 30/22/14/6	Bit 29/21/13/5	Bit 28/20/12/4	Bit 27/19/11/3	Bit 26/18/10/2	Bit 25/17/9/1	Bit 24/16/8/0
Video display controller 4	GR3_FLM6	GR3_ FORMAT[3]	GR3_ FORMAT[2]	GR3_ FORMAT[1]	GR3_ FORMAT[0]	—	—	GR3_HW[9]	GR3_HW[8]
		GR3_HW[7]	GR3_HW[6]	GR3_HW[5]	GR3_HW[4]	GR3_HW[3]	GR3_HW[2]	GR3_HW[1]	GR3_HW[0]
		—	—	—	GR3_ ENDIAN_ON	—	—	—	—
		—	—	GR3_STA_ POS[5]	GR3_STA_ POS[4]	GR3_STA_ POS[3]	GR3_STA_ POS[2]	GR3_STA_ POS[1]	GR3_STA_ POS[0]
	GR3_AB1	—	—	—	—	—	—	—	—
		—	—	—	—	—	—	—	—
		—	—	—	GR3_ARC_ON	—	—	—	GR3_ARC_ DISP_ON
		—	—	—	GR3_GRC_ DISP_ON	—	—	GR3_DISP_ SEL[1]	GR3_DISP_ SEL[0]
	GR3_AB2	—	—	—	—	—	GR3_GRC_ VS[10]	GR3_GRC_ VS[9]	GR3_GRC_ VS[8]
		GR3_GRC_ VS[7]	GR3_GRC_ VS[6]	GR3_GRC_ VS[5]	GR3_GRC_ VS[4]	GR3_GRC_ VS[3]	GR3_GRC_ VS[2]	GR3_GRC_ VS[1]	GR3_GRC_ VS[0]
		—	—	—	—	—	GR3_GRC_ VW[10]	GR3_GRC_ VW[9]	GR3_GRC_ VW[8]
		GR3_GRC_ VW[7]	GR3_GRC_ VW[6]	GR3_GRC_ VW[5]	GR3_GRC_ VW[4]	GR3_GRC_ VW[3]	GR3_GRC_ VW[2]	GR3_GRC_ VW[1]	GR3_GRC_ VW[0]
	GR3_AB3	—	—	—	—	—	GR3_GRC_ HS[10]	GR3_GRC_ HS[9]	GR3_GRC_ HS[8]
		GR3_GRC_ HS[7]	GR3_GRC_ HS[6]	GR3_GRC_ HS[5]	GR3_GRC_ HS[4]	GR3_GRC_ HS[3]	GR3_GRC_ HS[2]	GR3_GRC_ HS[1]	GR3_GRC_ HS[0]
		—	—	—	—	—	GR3_GRC_ HW[10]	GR3_GRC_ HW[9]	GR3_GRC_ HW[8]
		GR3_GRC_ HW[7]	GR3_GRC_ HW[6]	GR3_GRC_ HW[5]	GR3_GRC_ HW[4]	GR3_GRC_ HW[3]	GR3_GRC_ HW[2]	GR3_GRC_ HW[1]	GR3_GRC_ HW[0]
	GR3_AB4	—	—	—	—	—	GR3_ARC_ VS[10]	GR3_ARC_ VS[9]	GR3_ARC_ VS[8]
		GR3_ARC_ VS[7]	GR3_ARC_ VS[6]	GR3_ARC_ VS[5]	GR3_ARC_ VS[4]	GR3_ARC_ VS[3]	GR3_ARC_ VS[2]	GR3_ARC_ VS[1]	GR3_ARC_ VS[0]
		—	—	—	—	—	GR3_ARC_ VW[10]	GR3_ARC_ VW[9]	GR3_ARC_ VW[8]
		GR3_ARC_ VW[7]	GR3_ARC_ VW[6]	GR3_ARC_ VW[5]	GR3_ARC_ VW[4]	GR3_ARC_ VW[3]	GR3_ARC_ VW[2]	GR3_ARC_ VW[1]	GR3_ARC_ VW[0]

chanhvinh.com

Module Name	Register Abbreviation	Bit 31/23/15/7	Bit 30/22/14/6	Bit 29/21/13/5	Bit 28/20/12/4	Bit 27/19/11/3	Bit 26/18/10/2	Bit 25/17/9/1	Bit 24/16/8/0
Video display controller 4	GR3_AB5	—	—	—	—	—	GR3_ARC_HS[10]	GR3_ARC_HS[9]	GR3_ARC_HS[8]
		GR3_ARC_HS[7]	GR3_ARC_HS[6]	GR3_ARC_HS[5]	GR3_ARC_HS[4]	GR3_ARC_HS[3]	GR3_ARC_HS[2]	GR3_ARC_HS[1]	GR3_ARC_HS[0]
		—	—	—	—	—	GR3_ARC_HW[10]	GR3_ARC_HW[9]	GR3_ARC_HW[8]
		GR3_ARC_HW[7]	GR3_ARC_HW[6]	GR3_ARC_HW[5]	GR3_ARC_HW[4]	GR3_ARC_HW[3]	GR3_ARC_HW[2]	GR3_ARC_HW[1]	GR3_ARC_HW[0]
	GR3_AB6	—	—	—	—	—	—	—	GR3_ARC_MODE
		GR3_ARC_COEF[7]	GR3_ARC_COEF[6]	GR3_ARC_COEF[5]	GR3_ARC_COEF[4]	GR3_ARC_COEF[3]	GR3_ARC_COEF[2]	GR3_ARC_COEF[1]	GR3_ARC_COEF[0]
		—	—	—	—	—	—	—	—
		GR3_ARC_RATE[7]	GR3_ARC_RATE[6]	GR3_ARC_RATE[5]	GR3_ARC_RATE[4]	GR3_ARC_RATE[3]	GR3_ARC_RATE[2]	GR3_ARC_RATE[1]	GR3_ARC_RATE[0]
	GR3_AB7	—	—	—	—	—	—	—	—
		GR3_ARC_DEF[7]	GR3_ARC_DEF[6]	GR3_ARC_DEF[5]	GR3_ARC_DEF[4]	GR3_ARC_DEF[3]	GR3_ARC_DEF[2]	GR3_ARC_DEF[1]	GR3_ARC_DEF[0]
		—	—	—	—	—	—	—	—
		—	—	—	—	—	—	—	GR3_CK_ON
	GR3_AB8	GR3_CK_KCLUT[7]	GR3_CK_KCLUT[6]	GR3_CK_KCLUT[5]	GR3_CK_KCLUT[4]	GR3_CK_KCLUT[3]	GR3_CK_KCLUT[2]	GR3_CK_KCLUT[1]	GR3_CK_KCLUT[0]
		GR3_CK_KG[7]	GR3_CK_KG[6]	GR3_CK_KG[5]	GR3_CK_KG[4]	GR3_CK_KG[3]	GR3_CK_KG[2]	GR3_CK_KG[1]	GR3_CK_KG[0]
		GR3_CK_KB[7]	GR3_CK_KB[6]	GR3_CK_KB[5]	GR3_CK_KB[4]	GR3_CK_KB[3]	GR3_CK_KB[2]	GR3_CK_KB[1]	GR3_CK_KB[0]
		GR3_CK_KR[7]	GR3_CK_KR[6]	GR3_CK_KR[5]	GR3_CK_KR[4]	GR3_CK_KR[3]	GR3_CK_KR[2]	GR3_CK_KR[1]	GR3_CK_KR[0]
	GR3_AB9	GR3_CK_A[7]	GR3_CK_A[6]	GR3_CK_A[5]	GR3_CK_A[4]	GR3_CK_A[3]	GR3_CK_A[2]	GR3_CK_A[1]	GR3_CK_A[0]
		GR3_CK_G[7]	GR3_CK_G[6]	GR3_CK_G[5]	GR3_CK_G[4]	GR3_CK_G[3]	GR3_CK_G[2]	GR3_CK_G[1]	GR3_CK_G[0]
		GR3_CK_B[7]	GR3_CK_B[6]	GR3_CK_B[5]	GR3_CK_B[4]	GR3_CK_B[3]	GR3_CK_B[2]	GR3_CK_B[1]	GR3_CK_B[0]
		GR3_CK_R[7]	GR3_CK_R[6]	GR3_CK_R[5]	GR3_CK_R[4]	GR3_CK_R[3]	GR3_CK_R[2]	GR3_CK_R[1]	GR3_CK_R[0]

chanhvinh.com

Module Name	Register Abbreviation	Bit 31/23/15/7	Bit 30/22/14/6	Bit 29/21/13/5	Bit 28/20/12/4	Bit 27/19/11/3	Bit 26/18/10/2	Bit 25/17/9/1	Bit 24/16/8/0
Video display controller 4	GR3_AB10	GR3_A0[7]	GR3_A0[6]	GR3_A0[5]	GR3_A0[4]	GR3_A0[3]	GR3_A0[2]	GR3_A0[1]	GR3_A0[0]
		GR3_G0[7]	GR3_G0[6]	GR3_G0[5]	GR3_G0[4]	GR3_G0[3]	GR3_G0[2]	GR3_G0[1]	GR3_G0[0]
		GR3_B0[7]	GR3_B0[6]	GR3_B0[5]	GR3_B0[4]	GR3_B0[3]	GR3_B0[2]	GR3_B0[1]	GR3_B0[0]
		GR3_R0[7]	GR3_R0[6]	GR3_R0[5]	GR3_R0[4]	GR3_R0[3]	GR3_R0[2]	GR3_R0[1]	GR3_R0[0]
	GR3_AB11	GR3_A1[7]	GR3_A1[6]	GR3_A1[5]	GR3_A1[4]	GR3_A1[3]	GR3_A1[2]	GR3_A1[1]	GR3_A1[0]
		GR3_G1[7]	GR3_G1[6]	GR3_G1[5]	GR3_G1[4]	GR3_G1[3]	GR3_G1[2]	GR3_G1[1]	GR3_G1[0]
		GR3_B1[7]	GR3_B1[6]	GR3_B1[5]	GR3_B1[4]	GR3_B1[3]	GR3_B1[2]	GR3_B1[1]	GR3_B1[0]
		GR3_R1[7]	GR3_R1[6]	GR3_R1[5]	GR3_R1[4]	GR3_R1[3]	GR3_R1[2]	GR3_R1[1]	GR3_R1[0]
	GR3_BASE	—	—	—	—	—	—	—	—
		GR3_BASE_G[7]	GR3_BASE_G[6]	GR3_BASE_G[5]	GR3_BASE_G[4]	GR3_BASE_G[3]	GR3_BASE_G[2]	GR3_BASE_G[1]	GR3_BASE_G[0]
		GR3_BASE_B[7]	GR3_BASE_B[6]	GR3_BASE_B[5]	GR3_BASE_B[4]	GR3_BASE_B[3]	GR3_BASE_B[2]	GR3_BASE_B[1]	GR3_BASE_B[0]
		GR3_BASE_R[7]	GR3_BASE_R[6]	GR3_BASE_R[5]	GR3_BASE_R[4]	GR3_BASE_R[3]	GR3_BASE_R[2]	GR3_BASE_R[1]	GR3_BASE_R[0]
	GR3_CLUT_INT	—	—	—	—	—	—	—	—
		—	—	—	—	—	—	—	GR3_CLT_SEL
		—	—	—	—	—	GR3_LINE[10]	GR3_LINE[9]	GR3_LINE[8]
		GR3_LINE[7]	GR3_LINE[6]	GR3_LINE[5]	GR3_LINE[4]	GR3_LINE[3]	GR3_LINE[2]	GR3_LINE[1]	GR3_LINE[0]
	GR3_MON	—	—	—	—	—	—	—	—
		—	—	—	—	—	—	—	—
		—	—	—	—	—	—	—	—
		—	—	—	—	—	—	—	GR3_ARC_ST
	GAM_G_UPDATE	—	—	—	—	—	—	—	—
		—	—	—	—	—	—	—	—
		—	—	—	—	—	—	—	—
		—	—	—	—	—	—	—	GAM_G_VEN

chanhvinh.com

Module Name	Register Abbreviation	Bit 31/23/15/7	Bit 30/22/14/6	Bit 29/21/13/5	Bit 28/20/12/4	Bit 27/19/11/3	Bit 26/18/10/2	Bit 25/17/9/1	Bit 24/16/8/0
Video display controller 4	GAM_SW	—	—	—	—	—	—	—	—
		—	—	—	—	—	—	—	—
		—	—	—	—	—	—	—	—
		—	—	—	—	—	—	—	GAM_ON
	GAM_G_LUT1	—	—	—	—	—	GAM_G_GAIN_00[10]	GAM_G_GAIN_00[9]	GAM_G_GAIN_00[8]
		GAM_G_GAIN_00[7]	GAM_G_GAIN_00[6]	GAM_G_GAIN_00[5]	GAM_G_GAIN_00[4]	GAM_G_GAIN_00[3]	GAM_G_GAIN_00[2]	GAM_G_GAIN_00[1]	GAM_G_GAIN_00[0]
		—	—	—	—	—	GAM_G_GAIN_01[10]	GAM_G_GAIN_01[9]	GAM_G_GAIN_01[8]
		GAM_G_GAIN_01[7]	GAM_G_GAIN_01[6]	GAM_G_GAIN_01[5]	GAM_G_GAIN_01[4]	GAM_G_GAIN_01[3]	GAM_G_GAIN_01[2]	GAM_G_GAIN_01[1]	GAM_G_GAIN_01[0]
	GAM_G_LUT2	—	—	—	—	—	GAM_G_GAIN_02[10]	GAM_G_GAIN_02[9]	GAM_G_GAIN_02[8]
		GAM_G_GAIN_02[7]	GAM_G_GAIN_02[6]	GAM_G_GAIN_02[5]	GAM_G_GAIN_02[4]	GAM_G_GAIN_02[3]	GAM_G_GAIN_02[2]	GAM_G_GAIN_02[1]	GAM_G_GAIN_02[0]
		—	—	—	—	—	GAM_G_GAIN_03[10]	GAM_G_GAIN_03[9]	GAM_G_GAIN_03[8]
		GAM_G_GAIN_03[7]	GAM_G_GAIN_03[6]	GAM_G_GAIN_03[5]	GAM_G_GAIN_03[4]	GAM_G_GAIN_03[3]	GAM_G_GAIN_03[2]	GAM_G_GAIN_03[1]	GAM_G_GAIN_03[0]
	GAM_G_LUT3	—	—	—	—	—	GAM_G_GAIN_04[10]	GAM_G_GAIN_04[9]	GAM_G_GAIN_04[8]
		GAM_G_GAIN_04[7]	GAM_G_GAIN_04[6]	GAM_G_GAIN_04[5]	GAM_G_GAIN_04[4]	GAM_G_GAIN_04[3]	GAM_G_GAIN_04[2]	GAM_G_GAIN_04[1]	GAM_G_GAIN_04[0]
		—	—	—	—	—	GAM_G_GAIN_05[10]	GAM_G_GAIN_05[9]	GAM_G_GAIN_05[8]
		GAM_G_GAIN_05[7]	GAM_G_GAIN_05[6]	GAM_G_GAIN_05[5]	GAM_G_GAIN_05[4]	GAM_G_GAIN_05[3]	GAM_G_GAIN_05[2]	GAM_G_GAIN_05[1]	GAM_G_GAIN_05[0]
	GAM_G_LUT4	—	—	—	—	—	GAM_G_GAIN_06[10]	GAM_G_GAIN_06[9]	GAM_G_GAIN_06[8]
		GAM_G_GAIN_06[7]	GAM_G_GAIN_06[6]	GAM_G_GAIN_06[5]	GAM_G_GAIN_06[4]	GAM_G_GAIN_06[3]	GAM_G_GAIN_06[2]	GAM_G_GAIN_06[1]	GAM_G_GAIN_06[0]
		—	—	—	—	—	GAM_G_GAIN_07[10]	GAM_G_GAIN_07[9]	GAM_G_GAIN_07[8]
		GAM_G_GAIN_07[7]	GAM_G_GAIN_07[6]	GAM_G_GAIN_07[5]	GAM_G_GAIN_07[4]	GAM_G_GAIN_07[3]	GAM_G_GAIN_07[2]	GAM_G_GAIN_07[1]	GAM_G_GAIN_07[0]

chanhvinh.com

Module Name	Register Abbreviation	Bit 31/23/15/7	Bit 30/22/14/6	Bit 29/21/13/5	Bit 28/20/12/4	Bit 27/19/11/3	Bit 26/18/10/2	Bit 25/17/9/1	Bit 24/16/8/0
Video display controller 4	GAM_G_LUT5	—	—	—	—	—	GAM_G_GAIN_08[10]	GAM_G_GAIN_08[9]	GAM_G_GAIN_08[8]
		GAM_G_GAIN_08[7]	GAM_G_GAIN_08[6]	GAM_G_GAIN_08[5]	GAM_G_GAIN_08[4]	GAM_G_GAIN_08[3]	GAM_G_GAIN_08[2]	GAM_G_GAIN_08[1]	GAM_G_GAIN_08[0]
		—	—	—	—	—	GAM_G_GAIN_09[10]	GAM_G_GAIN_09[9]	GAM_G_GAIN_09[8]
		GAM_G_GAIN_09[7]	GAM_G_GAIN_09[6]	GAM_G_GAIN_09[5]	GAM_G_GAIN_09[4]	GAM_G_GAIN_09[3]	GAM_G_GAIN_09[2]	GAM_G_GAIN_09[1]	GAM_G_GAIN_09[0]
	GAM_G_LUT6	—	—	—	—	—	GAM_G_GAIN_10[10]	GAM_G_GAIN_10[9]	GAM_G_GAIN_10[8]
		GAM_G_GAIN_10[7]	GAM_G_GAIN_10[6]	GAM_G_GAIN_10[5]	GAM_G_GAIN_10[4]	GAM_G_GAIN_10[3]	GAM_G_GAIN_10[2]	GAM_G_GAIN_10[1]	GAM_G_GAIN_10[0]
		—	—	—	—	—	GAM_G_GAIN_11[10]	GAM_G_GAIN_11[9]	GAM_G_GAIN_11[8]
		GAM_G_GAIN_11[7]	GAM_G_GAIN_11[6]	GAM_G_GAIN_11[5]	GAM_G_GAIN_11[4]	GAM_G_GAIN_11[3]	GAM_G_GAIN_11[2]	GAM_G_GAIN_11[1]	GAM_G_GAIN_11[0]
	GAM_G_LUT7	—	—	—	—	—	GAM_G_GAIN_12[10]	GAM_G_GAIN_12[9]	GAM_G_GAIN_12[8]
		GAM_G_GAIN_12[7]	GAM_G_GAIN_12[6]	GAM_G_GAIN_12[5]	GAM_G_GAIN_12[4]	GAM_G_GAIN_12[3]	GAM_G_GAIN_12[2]	GAM_G_GAIN_12[1]	GAM_G_GAIN_12[0]
		—	—	—	—	—	GAM_G_GAIN_13[10]	GAM_G_GAIN_13[9]	GAM_G_GAIN_13[8]
		GAM_G_GAIN_13[7]	GAM_G_GAIN_13[6]	GAM_G_GAIN_13[5]	GAM_G_GAIN_13[4]	GAM_G_GAIN_13[3]	GAM_G_GAIN_13[2]	GAM_G_GAIN_13[1]	GAM_G_GAIN_13[0]
	GAM_G_LUT8	—	—	—	—	—	GAM_G_GAIN_14[10]	GAM_G_GAIN_14[9]	GAM_G_GAIN_14[8]
		GAM_G_GAIN_14[7]	GAM_G_GAIN_14[6]	GAM_G_GAIN_14[5]	GAM_G_GAIN_14[4]	GAM_G_GAIN_14[3]	GAM_G_GAIN_14[2]	GAM_G_GAIN_14[1]	GAM_G_GAIN_14[0]
		—	—	—	—	—	GAM_G_GAIN_15[10]	GAM_G_GAIN_15[9]	GAM_G_GAIN_15[8]
		GAM_G_GAIN_15[7]	GAM_G_GAIN_15[6]	GAM_G_GAIN_15[5]	GAM_G_GAIN_15[4]	GAM_G_GAIN_15[3]	GAM_G_GAIN_15[2]	GAM_G_GAIN_15[1]	GAM_G_GAIN_15[0]

chanhvinh.com

Module Name	Register Abbreviation	Bit 31/23/15/7	Bit 30/22/14/6	Bit 29/21/13/5	Bit 28/20/12/4	Bit 27/19/11/3	Bit 26/18/10/2	Bit 25/17/9/1	Bit 24/16/8/0
Video display controller 4	GAM_G_LUT9	—	—	—	—	—	GAM_G_GAIN_16[10]	GAM_G_GAIN_16[9]	GAM_G_GAIN_16[8]
		GAM_G_GAIN_16[7]	GAM_G_GAIN_16[6]	GAM_G_GAIN_16[5]	GAM_G_GAIN_16[4]	GAM_G_GAIN_16[3]	GAM_G_GAIN_16[2]	GAM_G_GAIN_16[1]	GAM_G_GAIN_16[0]
		—	—	—	—	—	GAM_G_GAIN_17[10]	GAM_G_GAIN_17[9]	GAM_G_GAIN_17[8]
		GAM_G_GAIN_17[7]	GAM_G_GAIN_17[6]	GAM_G_GAIN_17[5]	GAM_G_GAIN_17[4]	GAM_G_GAIN_17[3]	GAM_G_GAIN_17[2]	GAM_G_GAIN_17[1]	GAM_G_GAIN_17[0]
	GAM_G_LUT10	—	—	—	—	—	GAM_G_GAIN_18[10]	GAM_G_GAIN_18[9]	GAM_G_GAIN_18[8]
		GAM_G_GAIN_18[7]	GAM_G_GAIN_18[6]	GAM_G_GAIN_18[5]	GAM_G_GAIN_18[4]	GAM_G_GAIN_18[3]	GAM_G_GAIN_18[2]	GAM_G_GAIN_18[1]	GAM_G_GAIN_18[0]
		—	—	—	—	—	GAM_G_GAIN_19[10]	GAM_G_GAIN_19[9]	GAM_G_GAIN_19[8]
		GAM_G_GAIN_19[7]	GAM_G_GAIN_19[6]	GAM_G_GAIN_19[5]	GAM_G_GAIN_19[4]	GAM_G_GAIN_19[3]	GAM_G_GAIN_19[2]	GAM_G_GAIN_19[1]	GAM_G_GAIN_19[0]
	GAM_G_LUT11	—	—	—	—	—	GAM_G_GAIN_20[10]	GAM_G_GAIN_20[9]	GAM_G_GAIN_20[8]
		GAM_G_GAIN_20[7]	GAM_G_GAIN_20[6]	GAM_G_GAIN_20[5]	GAM_G_GAIN_20[4]	GAM_G_GAIN_20[3]	GAM_G_GAIN_20[2]	GAM_G_GAIN_20[1]	GAM_G_GAIN_20[0]
		—	—	—	—	—	GAM_G_GAIN_21[10]	GAM_G_GAIN_21[9]	GAM_G_GAIN_21[8]
		GAM_G_GAIN_21[7]	GAM_G_GAIN_21[6]	GAM_G_GAIN_21[5]	GAM_G_GAIN_21[4]	GAM_G_GAIN_21[3]	GAM_G_GAIN_21[2]	GAM_G_GAIN_21[1]	GAM_G_GAIN_21[0]
	GAM_G_LUT12	—	—	—	—	—	GAM_G_GAIN_22[10]	GAM_G_GAIN_22[9]	GAM_G_GAIN_22[8]
		GAM_G_GAIN_22[7]	GAM_G_GAIN_22[6]	GAM_G_GAIN_22[5]	GAM_G_GAIN_22[4]	GAM_G_GAIN_22[3]	GAM_G_GAIN_22[2]	GAM_G_GAIN_22[1]	GAM_G_GAIN_22[0]
		—	—	—	—	—	GAM_G_GAIN_23[10]	GAM_G_GAIN_23[9]	GAM_G_GAIN_23[8]
		GAM_G_GAIN_23[7]	GAM_G_GAIN_23[6]	GAM_G_GAIN_23[5]	GAM_G_GAIN_23[4]	GAM_G_GAIN_23[3]	GAM_G_GAIN_23[2]	GAM_G_GAIN_23[1]	GAM_G_GAIN_23[0]

chanhvinh.com

Module Name	Register Abbreviation	Bit 31/23/15/7	Bit 30/22/14/6	Bit 29/21/13/5	Bit 28/20/12/4	Bit 27/19/11/3	Bit 26/18/10/2	Bit 25/17/9/1	Bit 24/16/8/0
Video display controller 4	GAM_G_ LUT13	—	—	—	—	—	GAM_G_ GAIN_24[10]	GAM_G_ GAIN_24[9]	GAM_G_ GAIN_24[8]
		GAM_G_ GAIN_24[7]	GAM_G_ GAIN_24[6]	GAM_G_ GAIN_24[5]	GAM_G_ GAIN_24[4]	GAM_G_ GAIN_24[3]	GAM_G_ GAIN_24[2]	GAM_G_ GAIN_24[1]	GAM_G_ GAIN_24[0]
		—	—	—	—	—	GAM_G_ GAIN_25[10]	GAM_G_ GAIN_25[9]	GAM_G_ GAIN_25[8]
		GAM_G_ GAIN_25[7]	GAM_G_ GAIN_25[6]	GAM_G_ GAIN_25[5]	GAM_G _GAIN_25[4]	GAM_G_ GAIN_25[3]	GAM_G_ GAIN_25[2]	GAM_G_ GAIN_25[1]	GAM_G_ GAIN_25[0]
	GAM_G_ LUT14	—	—	—	—	—	GAM_G_ GAIN_26[10]	GAM_G_ GAIN_26[9]	GAM_G_ GAIN_26[8]
		GAM_G_ GAIN_26[7]	GAM_G_ GAIN_26[6]	GAM_G_ GAIN_26[5]	GAM_G_ GAIN_26[4]	GAM_G_ GAIN_26[3]	GAM_G_ GAIN_26[2]	GAM_G_ GAIN_26[1]	GAM_G_ GAIN_26[0]
		—	—	—	—	—	GAM_G_ GAIN_27[10]	GAM_G_ GAIN_27[9]	GAM_G_ GAIN_27[8]
		GAM_G_ GAIN_27[7]	GAM_G_ GAIN_27[6]	GAM_G_ GAIN_27[5]	GAM_G_ GAIN_27[4]	GAM_G_ GAIN_27[3]	GAM_G_ GAIN_27[2]	GAM_G_ GAIN_27[1]	GAM_G_ GAIN_27[0]
	GAM_G_ LUT15	—	—	—	—	—	GAM_G_ GAIN_28[10]	GAM_G_ GAIN_28[9]	GAM_G_ GAIN_28[8]
		GAM_G_ AIN_28[7]	GAM_G_ GAIN_28[6]	GAM_G_ GAIN_28[5]	GAM_G_ GAIN_28[4]	GAM_G_ GAIN_28[3]	GAM_G_ GAIN_28[2]	GAM_G_ GAIN_28[1]	GAM_G_ GAIN_28[0]
		—	—	—	—	—	GAM_G_ GAIN_29[10]	GAM_G_ GAIN_29[9]	GAM_G_G AIN_29[8]
		GAM_G_ GAIN_29[7]	GAM_G_ GAIN_29[6]	GAM_G_ GAIN_29[5]	GAM_G_ GAIN_29[4]	GAM_G_ GAIN_29[3]	GAM_G_ GAIN_29[2]	GAM_G_ GAIN_29[1]	GAM_G_ GAIN_29[0]
	GAM_G_ LUT16	—	—	—	—	—	GAM_G_ GAIN_30[10]	GAM_G_ GAIN_30[9]	GAM_G_ GAIN_30[8]
		GAM_G_ GAIN_30[7]	GAM_G_ GAIN_30[6]	GAM_G_ GAIN_30[5]	GAM_G_ GAIN_30[4]	GAM_G_ GAIN_30[3]	GAM_G_ GAIN_30[2]	GAM_G_ GAIN_30[1]	GAM_G_ GAIN_30[0]
		—	—	—	—	—	GAM_G_ GAIN_31[10]	GAM_G_ GAIN_31[9]	GAM_G_ GAIN_31[8]
		GAM_G_ GAIN_31[7]	GAM_G_ GAIN_31[6]	GAM_G_ GAIN_31[5]	GAM_G_ GAIN_31[4]	GAM_G_ GAIN_31[3]	GAM_G_ GAIN_31[2]	GAM_G_ GAIN_31[1]	GAM_G_ GAIN_31[0]

chanhvinh.com

Module Name	Register Abbreviation	Bit 31/23/15/7	Bit 30/22/14/6	Bit 29/21/13/5	Bit 28/20/12/4	Bit 27/19/11/3	Bit 26/18/10/2	Bit 25/17/9/1	Bit 24/16/8/0
Video display controller 4	GAM_G_AREA1	—	—	—	—	—	—	—	—
		GAM_G_TH_01[7]	GAM_G_TH_01[6]	GAM_G_TH_01[5]	GAM_G_TH_01[4]	GAM_G_TH_01[3]	GAM_G_TH_01[2]	GAM_G_TH_01[1]	GAM_G_TH_01[0]
		GAM_G_TH_02[7]	GAM_G_TH_02[6]	GAM_G_TH_02[5]	GAM_G_TH_02[4]	GAM_G_TH_02[3]	GAM_G_TH_02[2]	GAM_G_TH_02[1]	GAM_G_TH_02[0]
		GAM_G_TH_03[7]	GAM_G_TH_03[6]	GAM_G_TH_03[5]	GAM_G_TH_03[4]	GAM_G_TH_03[3]	GAM_G_TH_03[2]	GAM_G_TH_03[1]	GAM_G_TH_03[0]
	GAM_G_AREA2	GAM_G_TH_04[7]	GAM_G_TH_04[6]	GAM_G_TH_04[5]	GAM_G_TH_04[4]	GAM_G_TH_04[3]	GAM_G_TH_04[2]	GAM_G_TH_04[1]	GAM_G_TH_04[0]
		GAM_G_TH_05[7]	GAM_G_TH_05[6]	GAM_G_TH_05[5]	GAM_G_TH_05[4]	GAM_G_TH_05[3]	GAM_G_TH_05[2]	GAM_G_TH_05[1]	GAM_G_TH_05[0]
		GAM_G_TH_06[7]	GAM_G_TH_06[6]	GAM_G_TH_06[5]	GAM_G_TH_06[4]	GAM_G_TH_06[3]	GAM_G_TH_06[2]	GAM_G_TH_06[1]	GAM_G_TH_06[0]
		GAM_G_TH_07[7]	GAM_G_TH_07[6]	GAM_G_TH_07[5]	GAM_G_TH_07[4]	GAM_G_TH_07[3]	GAM_G_TH_07[2]	GAM_G_TH_07[1]	GAM_G_TH_07[0]
	GAM_G_AREA3	GAM_G_TH_08[7]	GAM_G_TH_08[6]	GAM_G_TH_08[5]	GAM_G_TH_08[4]	GAM_G_TH_08[3]	GAM_G_TH_08[2]	GAM_G_TH_08[1]	GAM_G_TH_08[0]
		GAM_G_TH_09[7]	GAM_G_TH_09[6]	GAM_G_TH_09[5]	GAM_G_TH_09[4]	GAM_G_TH_09[3]	GAM_G_TH_09[2]	GAM_G_TH_09[1]	GAM_G_TH_09[0]
		GAM_G_TH_10[7]	GAM_G_TH_10[6]	GAM_G_TH_10[5]	GAM_G_TH_10[4]	GAM_G_TH_10[3]	GAM_G_TH_10[2]	GAM_G_TH_10[1]	GAM_G_TH_10[0]
		GAM_G_TH_11[7]	GAM_G_TH_11[6]	GAM_G_TH_11[5]	GAM_G_TH_11[4]	GAM_G_TH_11[3]	GAM_G_TH_11[2]	GAM_G_TH_11[1]	GAM_G_TH_11[0]
	GAM_G_AREA4	GAM_G_TH_12[7]	GAM_G_TH_12[6]	GAM_G_TH_12[5]	GAM_G_TH_12[4]	GAM_G_TH_12[3]	GAM_G_TH_12[2]	GAM_G_TH_12[1]	GAM_G_TH_12[0]
		GAM_G_TH_13[7]	GAM_G_TH_13[6]	GAM_G_TH_13[5]	GAM_G_TH_13[4]	GAM_G_TH_13[3]	GAM_G_TH_13[2]	GAM_G_TH_13[1]	GAM_G_TH_13[0]
		GAM_G_TH_14[7]	GAM_G_TH_14[6]	GAM_G_TH_14[5]	GAM_G_TH_14[4]	GAM_G_TH_14[3]	GAM_G_TH_14[2]	GAM_G_TH_14[1]	GAM_G_TH_14[0]
		GAM_G_TH_15[7]	GAM_G_TH_15[6]	GAM_G_TH_15[5]	GAM_G_TH_15[4]	GAM_G_TH_15[3]	GAM_G_TH_15[2]	GAM_G_TH_15[1]	GAM_G_TH_15[0]

chanhvinh.com

Module Name	Register Abbreviation	Bit 31/23/15/7	Bit 30/22/14/6	Bit 29/21/13/5	Bit 28/20/12/4	Bit 27/19/11/3	Bit 26/18/10/2	Bit 25/17/9/1	Bit 24/16/8/0
Video display controller 4	GAM_G_AREA5	GAM_G_TH_16[7]	GAM_G_TH_16[6]	GAM_G_TH_16[5]	GAM_G_TH_16[4]	GAM_G_TH_16[3]	GAM_G_TH_16[2]	GAM_G_TH_16[1]	GAM_G_TH_16[0]
		GAM_G_TH_17[7]	GAM_G_TH_17[6]	GAM_G_TH_17[5]	GAM_G_TH_17[4]	GAM_G_TH_17[3]	GAM_G_TH_17[2]	GAM_G_TH_17[1]	GAM_G_TH_17[0]
		GAM_G_TH_18[7]	GAM_G_TH_18[6]	GAM_G_TH_18[5]	GAM_G_TH_18[4]	GAM_G_TH_18[3]	GAM_G_TH_18[2]	GAM_G_TH_18[1]	GAM_G_TH_18[0]
		GAM_G_TH_19[7]	GAM_G_TH_19[6]	GAM_G_TH_19[5]	GAM_G_TH_19[4]	GAM_G_TH_19[3]	GAM_G_TH_19[2]	GAM_G_TH_19[1]	GAM_G_TH_19[0]
	GAM_G_AREA6	GAM_G_TH_20[7]	GAM_G_TH_20[6]	GAM_G_TH_20[5]	GAM_G_TH_20[4]	GAM_G_TH_20[3]	GAM_G_TH_20[2]	GAM_G_TH_20[1]	GAM_G_TH_20[0]
		GAM_G_TH_21[7]	GAM_G_TH_21[6]	GAM_G_TH_21[5]	GAM_G_TH_21[4]	GAM_G_TH_21[3]	GAM_G_TH_21[2]	GAM_G_TH_21[1]	GAM_G_TH_21[0]
		GAM_G_TH_22[7]	GAM_G_TH_22[6]	GAM_G_TH_22[5]	GAM_G_TH_22[4]	GAM_G_TH_22[3]	GAM_G_TH_22[2]	GAM_G_TH_22[1]	GAM_G_TH_22[0]
		GAM_G_TH_23[7]	GAM_G_TH_23[6]	GAM_G_TH_23[5]	GAM_G_TH_23[4]	GAM_G_TH_23[3]	GAM_G_TH_23[2]	GAM_G_TH_23[1]	GAM_G_TH_23[0]
	GAM_G_AREA7	GAM_G_TH_24[7]	GAM_G_TH_24[6]	GAM_G_TH_24[5]	GAM_G_TH_24[4]	GAM_G_TH_24[3]	GAM_G_TH_24[2]	GAM_G_TH_24[1]	GAM_G_TH_24[0]
		GAM_G_TH_25[7]	GAM_G_TH_25[6]	GAM_G_TH_25[5]	GAM_G_TH_25[4]	GAM_G_TH_25[3]	GAM_G_TH_25[2]	GAM_G_TH_25[1]	GAM_G_TH_25[0]
		GAM_G_TH_26[7]	GAM_G_TH_26[6]	GAM_G_TH_26[5]	GAM_G_TH_26[4]	GAM_G_TH_26[3]	GAM_G_TH_26[2]	GAM_G_TH_26[1]	GAM_G_TH_26[0]
		GAM_G_TH_27[7]	GAM_G_TH_27[6]	GAM_G_TH_27[5]	GAM_G_TH_27[4]	GAM_G_TH_27[3]	GAM_G_TH_27[2]	GAM_G_TH_27[1]	GAM_G_TH_27[0]
	GAM_G_AREA8	GAM_G_TH_28[7]	GAM_G_TH_28[6]	GAM_G_TH_28[5]	GAM_G_TH_28[4]	GAM_G_TH_28[3]	GAM_G_TH_28[2]	GAM_G_TH_28[1]	GAM_G_TH_28[0]
		GAM_G_TH_29[7]	GAM_G_TH_29[6]	GAM_G_TH_29[5]	GAM_G_TH_29[4]	GAM_G_TH_29[3]	GAM_G_TH_29[2]	GAM_G_TH_29[1]	GAM_G_TH_29[0]
		GAM_G_TH_30[7]	GAM_G_TH_30[6]	GAM_G_TH_30[5]	GAM_G_TH_30[4]	GAM_G_TH_30[3]	GAM_G_TH_30[2]	GAM_G_TH_30[1]	GAM_G_TH_30[0]
		GAM_G_TH_31[7]	GAM_G_TH_31[6]	GAM_G_TH_31[5]	GAM_G_TH_31[4]	GAM_G_TH_31[3]	GAM_G_TH_31[2]	GAM_G_TH_31[1]	GAM_G_TH_31[0]

chanhvinh.com

Module Name	Register Abbreviation	Bit 31/23/15/7	Bit 30/22/14/6	Bit 29/21/13/5	Bit 28/20/12/4	Bit 27/19/11/3	Bit 26/18/10/2	Bit 25/17/9/1	Bit 24/16/8/0
Video display controller 4	GAM_B_UPDATE	—	—	—	—	—	—	—	—
		—	—	—	—	—	—	—	—
		—	—	—	—	—	—	—	—
		—	—	—	—	—	—	—	GAM_B_VEN
	GAM_B_LUT1	—	—	—	—	—	GAM_B_GAIN_00[10]	GAM_B_GAIN_00[9]	GAM_B_GAIN_00[8]
		GAM_B_GAIN_00[7]	GAM_B_GAIN_00[6]	GAM_B_GAIN_00[5]	GAM_B_GAIN_00[4]	GAM_B_GAIN_00[3]	GAM_B_GAIN_00[2]	GAM_B_GAIN_00[1]	GAM_B_GAIN_00[0]
		—	—	—	—	—	GAM_B_GAIN_01[10]	GAM_B_GAIN_01[9]	GAM_B_GAIN_01[8]
		GAM_B_GAIN_01[7]	GAM_B_GAIN_01[6]	GAM_B_GAIN_01[5]	GAM_B_GAIN_01[4]	GAM_B_GAIN_01[3]	GAM_B_GAIN_01[2]	GAM_B_GAIN_01[1]	GAM_B_GAIN_01[0]
	GAM_B_LUT2	—	—	—	—	—	GAM_B_GAIN_02[10]	GAM_B_GAIN_02[9]	GAM_B_GAIN_02[8]
		GAM_B_GAIN_02[7]	GAM_B_GAIN_02[6]	GAM_B_GAIN_02[5]	GAM_B_GAIN_02[4]	GAM_B_GAIN_02[3]	GAM_B_GAIN_02[2]	GAM_B_GAIN_02[1]	GAM_B_GAIN_02[0]
		—	—	—	—	—	GAM_B_GAIN_03[10]	GAM_B_GAIN_03[9]	GAM_B_GAIN_03[8]
		GAM_B_GAIN_03[7]	GAM_B_GAIN_03[6]	GAM_B_GAIN_03[5]	GAM_B_GAIN_03[4]	GAM_B_GAIN_03[3]	GAM_B_GAIN_03[2]	GAM_B_GAIN_03[1]	GAM_B_GAIN_03[0]
	GAM_B_LUT3	—	—	—	—	—	GAM_B_GAIN_04[10]	GAM_B_GAIN_04[9]	GAM_B_GAIN_04[8]
		GAM_B_GAIN_04[7]	GAM_B_GAIN_04[6]	GAM_B_GAIN_04[5]	GAM_B_GAIN_04[4]	GAM_B_GAIN_04[3]	GAM_B_GAIN_04[2]	GAM_B_GAIN_04[1]	GAM_B_GAIN_04[0]
		—	—	—	—	—	GAM_B_GAIN_05[10]	GAM_B_GAIN_05[9]	GAM_B_GAIN_05[8]
		GAM_B_GAIN_05[7]	GAM_B_GAIN_05[6]	GAM_B_GAIN_05[5]	GAM_B_GAIN_05[4]	GAM_B_GAIN_05[3]	GAM_B_GAIN_05[2]	GAM_B_GAIN_05[1]	GAM_B_GAIN_05[0]
	GAM_B_LUT4	—	—	—	—	—	GAM_B_GAIN_06[10]	GAM_B_GAIN_06[9]	GAM_B_GAIN_06[8]
		GAM_B_GAIN_06[7]	GAM_B_GAIN_06[6]	GAM_B_GAIN_06[5]	GAM_B_GAIN_06[4]	GAM_B_GAIN_06[3]	GAM_B_GAIN_06[2]	GAM_B_GAIN_06[1]	GAM_B_GAIN_06[0]
		—	—	—	—	—	GAM_B_GAIN_07[10]	GAM_B_GAIN_07[9]	GAM_B_GAIN_07[8]
		GAM_B_GAIN_07[7]	GAM_B_GAIN_07[6]	GAM_B_GAIN_07[5]	GAM_B_GAIN_07[4]	GAM_B_GAIN_07[3]	GAM_B_GAIN_07[2]	GAM_B_GAIN_07[1]	GAM_B_GAIN_07[0]

chanhvinh.com

Module Name	Register Abbreviation	Bit 31/23/15/7	Bit 30/22/14/6	Bit 29/21/13/5	Bit 28/20/12/4	Bit 27/19/11/3	Bit 26/18/10/2	Bit 25/17/9/1	Bit 24/16/8/0
Video display controller 4	GAM_B_LUT5	—	—	—	—	—	GAM_B_GAIN_08[10]	GAM_B_GAIN_08[9]	GAM_B_GAIN_08[8]
		GAM_B_GAIN_08[7]	GAM_B_GAIN_08[6]	GAM_B_GAIN_08[5]	GAM_B_GAIN_08[4]	GAM_B_GAIN_08[3]	GAM_B_GAIN_08[2]	GAM_B_GAIN_08[1]	GAM_B_GAIN_08[0]
		—	—	—	—	—	GAM_B_GAIN_09[10]	GAM_B_GAIN_09[9]	GAM_B_GAIN_09[8]
		GAM_B_GAIN_09[7]	GAM_B_GAIN_09[6]	GAM_B_GAIN_09[5]	GAM_B_GAIN_09[4]	GAM_B_GAIN_09[3]	GAM_B_GAIN_09[2]	GAM_B_GAIN_09[1]	GAM_B_GAIN_09[0]
	GAM_B_LUT6	—	—	—	—	—	GAM_B_GAIN_10[10]	GAM_B_GAIN_10[9]	GAM_B_GAIN_10[8]
		GAM_B_GAIN_10[7]	GAM_B_GAIN_10[6]	GAM_B_GAIN_10[5]	GAM_B_GAIN_10[4]	GAM_B_GAIN_10[3]	GAM_B_GAIN_10[2]	GAM_B_GAIN_10[1]	GAM_B_GAIN_10[0]
		—	—	—	—	—	GAM_B_GAIN_11[10]	GAM_B_GAIN_11[9]	GAM_B_GAIN_11[8]
		GAM_B_GAIN_11[7]	GAM_B_GAIN_11[6]	GAM_B_GAIN_11[5]	GAM_B_GAIN_11[4]	GAM_B_GAIN_11[3]	GAM_B_GAIN_11[2]	GAM_B_GAIN_11[1]	GAM_B_GAIN_11[0]
	GAM_B_LUT7	—	—	—	—	—	GAM_B_GAIN_12[10]	GAM_B_GAIN_12[9]	GAM_B_GAIN_12[8]
		GAM_B_GAIN_12[7]	GAM_B_GAIN_12[6]	GAM_B_GAIN_12[5]	GAM_B_GAIN_12[4]	GAM_B_GAIN_12[3]	GAM_B_GAIN_12[2]	GAM_B_GAIN_12[1]	GAM_B_GAIN_12[0]
		—	—	—	—	—	GAM_B_GAIN_13[10]	GAM_B_GAIN_13[9]	GAM_B_GAIN_13[8]
		GAM_B_GAIN_13[7]	GAM_B_GAIN_13[6]	GAM_B_GAIN_13[5]	GAM_B_GAIN_13[4]	GAM_B_GAIN_13[3]	GAM_B_GAIN_13[2]	GAM_B_GAIN_13[1]	GAM_B_GAIN_13[0]
	GAM_B_LUT8	—	—	—	—	—	GAM_B_GAIN_14[10]	GAM_B_GAIN_14[9]	GAM_B_GAIN_14[8]
		GAM_B_GAIN_14[7]	GAM_B_GAIN_14[6]	GAM_B_GAIN_14[5]	GAM_B_GAIN_14[4]	GAM_B_GAIN_14[3]	GAM_B_GAIN_14[2]	GAM_B_GAIN_14[1]	GAM_B_GAIN_14[0]
		—	—	—	—	—	GAM_B_GAIN_15[10]	GAM_B_GAIN_15[9]	GAM_B_GAIN_15[8]
		GAM_B_GAIN_15[7]	GAM_B_GAIN_15[6]	GAM_B_GAIN_15[5]	GAM_B_GAIN_15[4]	GAM_B_GAIN_15[3]	GAM_B_GAIN_15[2]	GAM_B_GAIN_15[1]	GAM_B_GAIN_15[0]

chanhvinh.com

Module Name	Register Abbreviation	Bit 31/23/15/7	Bit 30/22/14/6	Bit 29/21/13/5	Bit 28/20/12/4	Bit 27/19/11/3	Bit 26/18/10/2	Bit 25/17/9/1	Bit 24/16/8/0
Video display controller 4	GAM_B_LUT9	—	—	—	—	—	GAM_B_GAIN_16[10]	GAM_B_GAIN_16[9]	GAM_B_GAIN_16[8]
		GAM_B_GAIN_16[7]	GAM_B_GAIN_16[6]	GAM_B_GAIN_16[5]	GAM_B_GAIN_16[4]	GAM_B_GAIN_16[3]	GAM_B_GAIN_16[2]	GAM_B_GAIN_16[1]	GAM_B_GAIN_16[0]
		—	—	—	—	—	GAM_B_GAIN_17[10]	GAM_B_GAIN_17[9]	GAM_B_GAIN_17[8]
		GAM_B_GAIN_17[7]	GAM_B_GAIN_17[6]	GAM_B_GAIN_17[5]	GAM_B_GAIN_17[4]	GAM_B_GAIN_17[3]	GAM_B_GAIN_17[2]	GAM_B_GAIN_17[1]	GAM_B_GAIN_17[0]
	GAM_B_LUT10	—	—	—	—	—	GAM_B_GAIN_18[10]	GAM_B_GAIN_18[9]	GAM_B_GAIN_18[8]
		GAM_B_GAIN_18[7]	GAM_B_GAIN_18[6]	GAM_B_GAIN_18[5]	GAM_B_GAIN_18[4]	GAM_B_GAIN_18[3]	GAM_B_GAIN_18[2]	GAM_B_GAIN_18[1]	GAM_B_GAIN_18[0]
		—	—	—	—	—	GAM_B_GAIN_19[10]	GAM_B_GAIN_19[9]	GAM_B_GAIN_19[8]
		GAM_B_GAIN_19[7]	GAM_B_GAIN_19[6]	GAM_B_GAIN_19[5]	GAM_B_GAIN_19[4]	GAM_B_GAIN_19[3]	GAM_B_GAIN_19[2]	GAM_B_GAIN_19[1]	GAM_B_GAIN_19[0]
	GAM_B_LUT11	—	—	—	—	—	GAM_B_GAIN_20[10]	GAM_B_GAIN_20[9]	GAM_B_GAIN_20[8]
		GAM_B_GAIN_20[7]	GAM_B_GAIN_20[6]	GAM_B_GAIN_20[5]	GAM_B_GAIN_20[4]	GAM_B_GAIN_20[3]	GAM_B_GAIN_20[2]	GAM_B_GAIN_20[1]	GAM_B_GAIN_20[0]
		—	—	—	—	—	GAM_B_GAIN_21[10]	GAM_B_GAIN_21[9]	GAM_B_GAIN_21[8]
		GAM_B_GAIN_21[7]	GAM_B_GAIN_21[6]	GAM_B_GAIN_21[5]	GAM_B_GAIN_21[4]	GAM_B_GAIN_21[3]	GAM_B_GAIN_21[2]	GAM_B_GAIN_21[1]	GAM_B_GAIN_21[0]
	GAM_B_LUT12	—	—	—	—	—	GAM_B_GAIN_22[10]	GAM_B_GAIN_22[9]	GAM_B_GAIN_22[8]
		GAM_B_GAIN_22[7]	GAM_B_GAIN_22[6]	GAM_B_GAIN_22[5]	GAM_B_GAIN_22[4]	GAM_B_GAIN_22[3]	GAM_B_GAIN_22[2]	GAM_B_GAIN_22[1]	GAM_B_GAIN_22[0]
		—	—	—	—	—	GAM_B_GAIN_23[10]	GAM_B_GAIN_23[9]	GAM_B_GAIN_23[8]
		GAM_B_GAIN_23[7]	GAM_B_GAIN_23[6]	GAM_B_GAIN_23[5]	GAM_B_GAIN_23[4]	GAM_B_GAIN_23[3]	GAM_B_GAIN_23[2]	GAM_B_GAIN_23[1]	GAM_B_GAIN_23[0]

chanhvinh.com

Module Name	Register Abbreviation	Bit 31/23/15/7	Bit 30/22/14/6	Bit 29/21/13/5	Bit 28/20/12/4	Bit 27/19/11/3	Bit 26/18/10/2	Bit 25/17/9/1	Bit 24/16/8/0
Video display controller 4	GAM_B_LUT13	—	—	—	—	—	GAM_B_GAIN_24[10]	GAM_B_GAIN_24[9]	GAM_B_GAIN_24[8]
		GAM_B_GAIN_24[7]	GAM_B_GAIN_24[6]	GAM_B_GAIN_24[5]	GAM_B_GAIN_24[4]	GAM_B_GAIN_24[3]	GAM_B_GAIN_24[2]	GAM_B_GAIN_24[1]	GAM_B_GAIN_24[0]
		—	—	—	—	—	GAM_B_GAIN_25[10]	GAM_B_GAIN_25[9]	GAM_B_GAIN_25[8]
		GAM_B_GAIN_25[7]	GAM_B_GAIN_25[6]	GAM_B_GAIN_25[5]	GAM_B_GAIN_25[4]	GAM_B_GAIN_25[3]	GAM_B_GAIN_25[2]	GAM_B_GAIN_25[1]	GAM_B_GAIN_25[0]
	GAM_B_LUT14	—	—	—	—	—	GAM_B_GAIN_26[10]	GAM_B_GAIN_26[9]	GAM_B_GAIN_26[8]
		GAM_B_GAIN_26[7]	GAM_B_GAIN_26[6]	GAM_B_GAIN_26[5]	GAM_B_GAIN_26[4]	GAM_B_GAIN_26[3]	GAM_B_GAIN_26[2]	GAM_B_GAIN_26[1]	GAM_B_GAIN_26[0]
		—	—	—	—	—	GAM_B_GAIN_27[10]	GAM_B_GAIN_27[9]	GAM_B_GAIN_27[8]
		GAM_B_GAIN_27[7]	GAM_B_GAIN_27[6]	GAM_B_GAIN_27[5]	GAM_B_GAIN_27[4]	GAM_B_GAIN_27[3]	GAM_B_GAIN_27[2]	GAM_B_GAIN_27[1]	GAM_B_GAIN_27[0]
	GAM_B_LUT15	—	—	—	—	—	GAM_B_GAIN_28[10]	GAM_B_GAIN_28[9]	GAM_B_GAIN_28[8]
		GAM_B_GAIN_28[7]	GAM_B_GAIN_28[6]	GAM_B_GAIN_28[5]	GAM_B_GAIN_28[4]	GAM_B_GAIN_28[3]	GAM_B_GAIN_28[2]	GAM_B_GAIN_28[1]	GAM_B_GAIN_28[0]
		—	—	—	—	—	GAM_B_GAIN_29[10]	GAM_B_GAIN_29[9]	GAM_B_GAIN_29[8]
		GAM_B_GAIN_29[7]	GAM_B_GAIN_29[6]	GAM_B_GAIN_29[5]	GAM_B_GAIN_29[4]	GAM_B_GAIN_29[3]	GAM_B_GAIN_29[2]	GAM_B_GAIN_29[1]	GAM_B_GAIN_29[0]
	GAM_B_LUT16	—	—	—	—	—	GAM_B_GAIN_30[10]	GAM_B_GAIN_30[9]	GAM_B_GAIN_30[8]
		GAM_B_GAIN_30[7]	GAM_B_GAIN_30[6]	GAM_B_GAIN_30[5]	GAM_B_GAIN_30[4]	GAM_B_GAIN_30[3]	GAM_B_GAIN_30[2]	GAM_B_GAIN_30[1]	GAM_B_GAIN_30[0]
		—	—	—	—	—	GAM_B_GAIN_31[10]	GAM_B_GAIN_31[9]	GAM_B_GAIN_31[8]
		GAM_B_GAIN_31[7]	GAM_B_GAIN_31[6]	GAM_B_GAIN_31[5]	GAM_B_GAIN_31[4]	GAM_B_GAIN_31[3]	GAM_B_GAIN_31[2]	GAM_B_GAIN_31[1]	GAM_B_GAIN_31[0]

chanhvinh.com

Module Name	Register Abbreviation	Bit 31/23/15/7	Bit 30/22/14/6	Bit 29/21/13/5	Bit 28/20/12/4	Bit 27/19/11/3	Bit 26/18/10/2	Bit 25/17/9/1	Bit 24/16/8/0
Video display controller 4	GAM_B_AREA1	—	—	—	—	—	—	—	—
		GAM_B_TH_01[7]	GAM_B_TH_01[6]	GAM_B_TH_01[5]	GAM_B_TH_01[4]	GAM_B_TH_01[3]	GAM_B_TH_01[2]	GAM_B_TH_01[1]	GAM_B_TH_01[0]
		GAM_B_TH_02[7]	GAM_B_TH_02[6]	GAM_B_TH_02[5]	GAM_B_TH_02[4]	GAM_B_TH_02[3]	GAM_B_TH_02[2]	GAM_B_TH_02[1]	GAM_B_TH_02[0]
		GAM_B_TH_03[7]	GAM_B_TH_03[6]	GAM_B_TH_03[5]	GAM_B_TH_03[4]	GAM_B_TH_03[3]	GAM_B_TH_03[2]	GAM_B_TH_03[1]	GAM_B_TH_03[0]
	GAM_B_AREA2	GAM_B_TH_04[7]	GAM_B_TH_04[6]	GAM_B_TH_04[5]	GAM_B_TH_04[4]	GAM_B_TH_04[3]	GAM_B_TH_04[2]	GAM_B_TH_04[1]	GAM_B_TH_04[0]
		GAM_B_TH_05[7]	GAM_B_TH_05[6]	GAM_B_TH_05[5]	GAM_B_TH_05[4]	GAM_B_TH_05[3]	GAM_B_TH_05[2]	GAM_B_TH_05[1]	GAM_B_TH_05[0]
		GAM_B_TH_06[7]	GAM_B_TH_06[6]	GAM_B_TH_06[5]	GAM_B_TH_06[4]	GAM_B_TH_06[3]	GAM_B_TH_06[2]	GAM_B_TH_06[1]	GAM_B_TH_06[0]
		GAM_B_TH_07[7]	GAM_B_TH_07[6]	GAM_B_TH_07[5]	GAM_B_TH_07[4]	GAM_B_TH_07[3]	GAM_B_TH_07[2]	GAM_B_TH_07[1]	GAM_B_TH_07[0]
	GAM_B_AREA3	GAM_B_TH_08[7]	GAM_B_TH_08[6]	GAM_B_TH_08[5]	GAM_B_TH_08[4]	GAM_B_TH_08[3]	GAM_B_TH_08[2]	GAM_B_TH_08[1]	GAM_B_TH_08[0]
		GAM_B_TH_09[7]	GAM_B_TH_09[6]	GAM_B_TH_09[5]	GAM_B_TH_09[4]	GAM_B_TH_09[3]	GAM_B_TH_09[2]	GAM_B_TH_09[1]	GAM_B_TH_09[0]
		GAM_B_TH_10[7]	GAM_B_TH_10[6]	GAM_B_TH_10[5]	GAM_B_TH_10[4]	GAM_B_TH_10[3]	GAM_B_TH_10[2]	GAM_B_TH_10[1]	GAM_B_TH_10[0]
		GAM_B_TH_11[7]	GAM_B_TH_11[6]	GAM_B_TH_11[5]	GAM_B_TH_11[4]	GAM_B_TH_11[3]	GAM_B_TH_11[2]	GAM_B_TH_11[1]	GAM_B_TH_11[0]
	GAM_B_AREA4	GAM_B_TH_12[7]	GAM_B_TH_12[6]	GAM_B_TH_12[5]	GAM_B_TH_12[4]	GAM_B_TH_12[3]	GAM_B_TH_12[2]	GAM_B_TH_12[1]	GAM_B_TH_12[0]
		GAM_B_TH_13[7]	GAM_B_TH_13[6]	GAM_B_TH_13[5]	GAM_B_TH_13[4]	GAM_B_TH_13[3]	GAM_B_TH_13[2]	GAM_B_TH_13[1]	GAM_B_TH_13[0]
		GAM_B_TH_14[7]	GAM_B_TH_14[6]	GAM_B_TH_14[5]	GAM_B_TH_14[4]	GAM_B_TH_14[3]	GAM_B_TH_14[2]	GAM_B_TH_14[1]	GAM_B_TH_14[0]
		GAM_B_TH_15[7]	GAM_B_TH_15[6]	GAM_B_TH_15[5]	GAM_B_TH_15[4]	GAM_B_TH_15[3]	GAM_B_TH_15[2]	GAM_B_TH_15[1]	GAM_B_TH_15[0]

chanhvinh.com

Module Name	Register Abbreviation	Bit 31/23/15/7	Bit 30/22/14/6	Bit 29/21/13/5	Bit 28/20/12/4	Bit 27/19/11/3	Bit 26/18/10/2	Bit 25/17/9/1	Bit 24/16/8/0
Video display controller 4	GAM_B_AREA5	GAM_B_TH_16[7]	GAM_B_TH_16[6]	GAM_B_TH_16[5]	GAM_B_TH_16[4]	GAM_B_TH_16[3]	GAM_B_TH_16[2]	GAM_B_TH_16[1]	GAM_B_TH_16[0]
		GAM_B_TH_17[7]	GAM_B_TH_17[6]	GAM_B_TH_17[5]	GAM_B_TH_17[4]	GAM_B_TH_17[3]	GAM_B_TH_17[2]	GAM_B_TH_17[1]	GAM_B_TH_17[0]
		GAM_B_TH_18[7]	GAM_B_TH_18[6]	GAM_B_TH_18[5]	GAM_B_TH_18[4]	GAM_B_TH_18[3]	GAM_B_TH_18[2]	GAM_B_TH_18[1]	GAM_B_TH_18[0]
		GAM_B_TH_19[7]	GAM_B_TH_19[6]	GAM_B_TH_19[5]	GAM_B_TH_19[4]	GAM_B_TH_19[3]	GAM_B_TH_19[2]	GAM_B_TH_19[1]	GAM_B_TH_19[0]
	GAM_B_AREA6	GAM_B_TH_20[7]	GAM_B_TH_20[6]	GAM_B_TH_20[5]	GAM_B_TH_20[4]	GAM_B_TH_20[3]	GAM_B_TH_20[2]	GAM_B_TH_20[1]	GAM_B_TH_20[0]
		GAM_B_TH_21[7]	GAM_B_TH_21[6]	GAM_B_TH_21[5]	GAM_B_TH_21[4]	GAM_B_TH_21[3]	GAM_B_TH_21[2]	GAM_B_TH_21[1]	GAM_B_TH_21[0]
		GAM_B_TH_22[7]	GAM_B_TH_22[6]	GAM_B_TH_22[5]	GAM_B_TH_22[4]	GAM_B_TH_22[3]	GAM_B_TH_22[2]	GAM_B_TH_22[1]	GAM_B_TH_22[0]
		GAM_B_TH_23[7]	GAM_B_TH_23[6]	GAM_B_TH_23[5]	GAM_B_TH_23[4]	GAM_B_TH_23[3]	GAM_B_TH_23[2]	GAM_B_TH_23[1]	GAM_B_TH_23[0]
	GAM_B_AREA7	GAM_B_TH_24[7]	GAM_B_TH_24[6]	GAM_B_TH_24[5]	GAM_B_TH_24[4]	GAM_B_TH_24[3]	GAM_B_TH_24[2]	GAM_B_TH_24[1]	GAM_B_TH_24[0]
		GAM_B_TH_25[7]	GAM_B_TH_25[6]	GAM_B_TH_25[5]	GAM_B_TH_25[4]	GAM_B_TH_25[3]	GAM_B_TH_25[2]	GAM_B_TH_25[1]	GAM_B_TH_25[0]
		GAM_B_TH_26[7]	GAM_B_TH_26[6]	GAM_B_TH_26[5]	GAM_B_TH_26[4]	GAM_B_TH_26[3]	GAM_B_TH_26[2]	GAM_B_TH_26[1]	GAM_B_TH_26[0]
		GAM_B_TH_27[7]	GAM_B_TH_27[6]	GAM_B_TH_27[5]	GAM_B_TH_27[4]	GAM_B_TH_27[3]	GAM_B_TH_27[2]	GAM_B_TH_27[1]	GAM_B_TH_27[0]
	GAM_B_AREA8	GAM_B_TH_28[7]	GAM_B_TH_28[6]	GAM_B_TH_28[5]	GAM_B_TH_28[4]	GAM_B_TH_28[3]	GAM_B_TH_28[2]	GAM_B_TH_28[1]	GAM_B_TH_28[0]
		GAM_B_TH_29[7]	GAM_B_TH_29[6]	GAM_B_TH_29[5]	GAM_B_TH_29[4]	GAM_B_TH_29[3]	GAM_B_TH_29[2]	GAM_B_TH_29[1]	GAM_B_TH_29[0]
		GAM_B_TH_30[7]	GAM_B_TH_30[6]	GAM_B_TH_30[5]	GAM_B_TH_30[4]	GAM_B_TH_30[3]	GAM_B_TH_30[2]	GAM_B_TH_30[1]	GAM_B_TH_30[0]
		GAM_B_TH_31[7]	GAM_B_TH_31[6]	GAM_B_TH_31[5]	GAM_B_TH_31[4]	GAM_B_TH_31[3]	GAM_B_TH_31[2]	GAM_B_TH_31[1]	GAM_B_TH_31[0]
	GAM_R_UPDATE	—	—	—	—	—	—	—	—
		—	—	—	—	—	—	—	—
		—	—	—	—	—	—	—	—
		—	—	—	—	—	—	—	GAM_R_VEN

chanhvinh.com

Module Name	Register Abbreviation	Bit 31/23/15/7	Bit 30/22/14/6	Bit 29/21/13/5	Bit 28/20/12/4	Bit 27/19/11/3	Bit 26/18/10/2	Bit 25/17/9/1	Bit 24/16/8/0
Video display controller 4	GAM_R_LUT1	—	—	—	—	—	GAM_R_GAIN_00[10]	GAM_R_GAIN_00[9]	GAM_R_GAIN_00[8]
		GAM_R_GAIN_00[7]	GAM_R_GAIN_00[6]	GAM_R_GAIN_00[5]	GAM_R_GAIN_00[4]	GAM_R_GAIN_00[3]	GAM_R_GAIN_00[2]	GAM_R_GAIN_00[1]	GAM_R_GAIN_00[0]
		—	—	—	—	—	GAM_R_GAIN_01[10]	GAM_R_GAIN_01[9]	GAM_R_GAIN_01[8]
		GAM_R_GAIN_01[7]	GAM_R_GAIN_01[6]	GAM_R_GAIN_01[5]	GAM_R_GAIN_01[4]	GAM_R_GAIN_01[3]	GAM_R_GAIN_01[2]	GAM_R_GAIN_01[1]	GAM_R_GAIN_01[0]
	GAM_R_LUT2	—	—	—	—	—	GAM_R_GAIN_02[10]	GAM_R_GAIN_02[9]	GAM_R_GAIN_02[8]
		GAM_R_GAIN_02[7]	GAM_R_GAIN_02[6]	GAM_R_GAIN_02[5]	GAM_R_GAIN_02[4]	GAM_R_GAIN_02[3]	GAM_R_GAIN_02[2]	GAM_R_GAIN_02[1]	GAM_R_GAIN_02[0]
		—	—	—	—	—	GAM_R_GAIN_03[10]	GAM_R_GAIN_03[9]	GAM_R_GAIN_03[8]
		GAM_R_GAIN_03[7]	GAM_R_GAIN_03[6]	GAM_R_GAIN_03[5]	GAM_R_GAIN_03[4]	GAM_R_GAIN_03[3]	GAM_R_GAIN_03[2]	GAM_R_GAIN_03[1]	GAM_R_GAIN_03[0]
	GAM_R_LUT3	—	—	—	—	—	GAM_R_GAIN_04[10]	GAM_R_GAIN_04[9]	GAM_R_GAIN_04[8]
		GAM_R_GAIN_04[7]	GAM_R_GAIN_04[6]	GAM_R_GAIN_04[5]	GAM_R_GAIN_04[4]	GAM_R_GAIN_04[3]	GAM_R_GAIN_04[2]	GAM_R_GAIN_04[1]	GAM_R_GAIN_04[0]
		—	—	—	—	—	GAM_R_GAIN_05[10]	GAM_R_GAIN_05[9]	GAM_R_GAIN_05[8]
		GAM_R_GAIN_05[7]	GAM_R_GAIN_05[6]	GAM_R_GAIN_05[5]	GAM_R_GAIN_05[4]	GAM_R_GAIN_05[3]	GAM_R_GAIN_05[2]	GAM_R_GAIN_05[1]	GAM_R_GAIN_05[0]
	GAM_R_LUT4	—	—	—	—	—	GAM_R_GAIN_06[10]	GAM_R_GAIN_06[9]	GAM_R_GAIN_06[8]
		GAM_R_GAIN_06[7]	GAM_R_GAIN_06[6]	GAM_R_GAIN_06[5]	GAM_R_GAIN_06[4]	GAM_R_GAIN_06[3]	GAM_R_GAIN_06[2]	GAM_R_GAIN_06[1]	GAM_R_GAIN_06[0]
		—	—	—	—	—	GAM_R_GAIN_07[10]	GAM_R_GAIN_07[9]	GAM_R_GAIN_07[8]
		GAM_R_GAIN_07[7]	GAM_R_GAIN_07[6]	GAM_R_GAIN_07[5]	GAM_R_GAIN_07[4]	GAM_R_GAIN_07[3]	GAM_R_GAIN_07[2]	GAM_R_GAIN_07[1]	GAM_R_GAIN_07[0]

chanhvinh.com

Module Name	Register Abbreviation	Bit 31/23/15/7	Bit 30/22/14/6	Bit 29/21/13/5	Bit 28/20/12/4	Bit 27/19/11/3	Bit 26/18/10/2	Bit 25/17/9/1	Bit 24/16/8/0
Video display controller 4	GAM_R_LUT5	—	—	—	—	—	GAM_R_ GAIN_08[10]	GAM_R_ GAIN_08[9]	GAM_R_ GAIN_08[8]
		GAM_R_ GAIN_08[7]	GAM_R_ GAIN_08[6]	GAM_R_ GAIN_08[5]	GAM_R_ GAIN_08[4]	GAM_R_ GAIN_08[3]	GAM_R_ GAIN_08[2]	GAM_R_ GAIN_08[1]	GAM_R_ GAIN_08[0]
		—	—	—	—	—	GAM_R_ GAIN_09[10]	GAM_R_ GAIN_09[9]	GAM_R_ GAIN_09[8]
		GAM_R_ GAIN_09[7]	GAM_R_ GAIN_09[6]	GAM_R_ GAIN_09[5]	GAM_R_ GAIN_09[4]	GAM_R_ GAIN_09[3]	GAM_R_ GAIN_09[2]	GAM_R_ GAIN_09[1]	GAM_R_ GAIN_09[0]
	GAM_R_LUT6	—	—	—	—	—	GAM_R_ GAIN_10[10]	GAM_R_ GAIN_10[9]	GAM_R_ GAIN_10[8]
		GAM_R_ AIN_10[7]	GAM_R_ GAIN_10[6]	GAM_R_ GAIN_10[5]	GAM_R_ GAIN_10[4]	GAM_R_ GAIN_10[3]	GAM_R_ GAIN_10[2]	GAM_R_ GAIN_10[1]	GAM_R_ GAIN_10[0]
		—	—	—	—	—	GAM_R_ GAIN_11[10]	GAM_R_ GAIN_11[9]	GAM_R_ GAIN_11[8]
		GAM_R_ GAIN_11[7]	GAM_R_ GAIN_11[6]	GAM_R_ GAIN_11[5]	GAM_R_ GAIN_11[4]	GAM_R_ GAIN_11[3]	GAM_R_ GAIN_11[2]	GAM_R_ GAIN_11[1]	GAM_R_ GAIN_11[0]
	GAM_R_LUT7	—	—	—	—	—	GAM_R_ GAIN_12[10]	GAM_R_ GAIN_12[9]	GAM_R_ GAIN_12[8]
		GAM_R_ GAIN_12[7]	GAM_R_ GAIN_12[6]	GAM_R_ GAIN_12[5]	GAM_R_ GAIN_12[4]	GAM_R_ GAIN_12[3]	GAM_R_ GAIN_12[2]	GAM_R_ GAIN_12[1]	GAM_R_ GAIN_12[0]
		—	—	—	—	—	GAM_R_ GAIN_13[10]	GAM_R_ GAIN_13[9]	GAM_R_ GAIN_13[8]
		GAM_R_ GAIN_13[7]	GAM_R_ GAIN_13[6]	GAM_R_ GAIN_13[5]	GAM_R_ GAIN_13[4]	GAM_R_ GAIN_13[3]	GAM_R_ GAIN_13[2]	GAM_R_ GAIN_13[1]	GAM_R_ GAIN_13[0]
	GAM_R_LUT8	—	—	—	—	—	GAM_R_ GAIN_14[10]	GAM_R_ GAIN_14[9]	GAM_R_ GAIN_14[8]
		GAM_R_ GAIN_14[7]	GAM_R_ GAIN_14[6]	GAM_R_ GAIN_14[5]	GAM_R_ GAIN_14[4]	GAM_R_ GAIN_14[3]	GAM_R_ GAIN_14[2]	GAM_R_ GAIN_14[1]	GAM_R_ GAIN_14[0]
		—	—	—	—	—	GAM_R_ GAIN_15[10]	GAM_R_ GAIN_15[9]	GAM_R_ GAIN_15[8]
		GAM_R_ GAIN_15[7]	GAM_R_ GAIN_15[6]	GAM_R_ GAIN_15[5]	GAM_R_ GAIN_15[4]	GAM_R_ GAIN_15[3]	GAM_R_ GAIN_15[2]	GAM_R_ GAIN_15[1]	GAM_R_ GAIN_15[0]

chanhvinh.com

Module Name	Register Abbreviation	Bit 31/23/15/7	Bit 30/22/14/6	Bit 29/21/13/5	Bit 28/20/12/4	Bit 27/19/11/3	Bit 26/18/10/2	Bit 25/17/9/1	Bit 24/16/8/0
Video display controller 4	GAM_R_LUT9	—	—	—	—	—	GAM_R_GAIN_16[10]	GAM_R_GAIN_16[9]	GAM_R_GAIN_16[8]
		GAM_R_GAIN_16[7]	GAM_R_GAIN_16[6]	GAM_R_GAIN_16[5]	GAM_R_GAIN_16[4]	GAM_R_GAIN_16[3]	GAM_R_GAIN_16[2]	GAM_R_GAIN_16[1]	GAM_R_GAIN_16[0]
		—	—	—	—	—	GAM_R_GAIN_17[10]	GAM_R_GAIN_17[9]	GAM_R_GAIN_17[8]
		GAM_R_GAIN_17[7]	GAM_R_GAIN_17[6]	GAM_R_GAIN_17[5]	GAM_R_GAIN_17[4]	GAM_R_GAIN_17[3]	GAM_R_GAIN_17[2]	GAM_R_GAIN_17[1]	GAM_R_GAIN_17[0]
	GAM_R_LUT10	—	—	—	—	—	GAM_R_GAIN_18[10]	GAM_R_GAIN_18[9]	GAM_R_GAIN_18[8]
		GAM_R_GAIN_18[7]	GAM_R_GAIN_18[6]	GAM_R_GAIN_18[5]	GAM_R_GAIN_18[4]	GAM_R_GAIN_18[3]	GAM_R_GAIN_18[2]	GAM_R_GAIN_18[1]	GAM_R_GAIN_18[0]
		—	—	—	—	—	GAM_R_GAIN_19[10]	GAM_R_GAIN_19[9]	GAM_R_GAIN_19[8]
		GAM_R_GAIN_19[7]	GAM_R_GAIN_19[6]	GAM_R_GAIN_19[5]	GAM_R_GAIN_19[4]	GAM_R_GAIN_19[3]	GAM_R_GAIN_19[2]	GAM_R_GAIN_19[1]	GAM_R_GAIN_19[0]
	GAM_R_LUT11	—	—	—	—	—	GAM_R_GAIN_20[10]	GAM_R_GAIN_20[9]	GAM_R_GAIN_20[8]
		GAM_R_GAIN_20[7]	GAM_R_GAIN_20[6]	GAM_R_GAIN_20[5]	GAM_R_GAIN_20[4]	GAM_R_GAIN_20[3]	GAM_R_GAIN_20[2]	GAM_R_GAIN_20[1]	GAM_R_GAIN_20[0]
		—	—	—	—	—	GAM_R_GAIN_21[10]	GAM_R_GAIN_21[9]	GAM_R_GAIN_21[8]
		GAM_R_GAIN_21[7]	GAM_R_GAIN_21[6]	GAM_R_GAIN_21[5]	GAM_R_GAIN_21[4]	GAM_R_GAIN_21[3]	GAM_R_GAIN_21[2]	GAM_R_GAIN_21[1]	GAM_R_GAIN_21[0]
	GAM_R_LUT12	—	—	—	—	—	GAM_R_GAIN_22[10]	GAM_R_GAIN_22[9]	GAM_R_GAIN_22[8]
		GAM_R_GAIN_22[7]	GAM_R_GAIN_22[6]	GAM_R_GAIN_22[5]	GAM_R_GAIN_22[4]	GAM_R_GAIN_22[3]	GAM_R_GAIN_22[2]	GAM_R_GAIN_22[1]	GAM_R_GAIN_22[0]
		—	—	—	—	—	GAM_R_GAIN_23[10]	GAM_R_GAIN_23[9]	GAM_R_GAIN_23[8]
		GAM_R_GAIN_23[7]	GAM_R_GAIN_23[6]	GAM_R_GAIN_23[5]	GAM_R_GAIN_23[4]	GAM_R_GAIN_23[3]	GAM_R_GAIN_23[2]	GAM_R_GAIN_23[1]	GAM_R_GAIN_23[0]

chanhvinh.com

Module Name	Register Abbreviation	Bit 31/23/15/7	Bit 30/22/14/6	Bit 29/21/13/5	Bit 28/20/12/4	Bit 27/19/11/3	Bit 26/18/10/2	Bit 25/17/9/1	Bit 24/16/8/0
Video display controller 4	GAM_R_ LUT13	—	—	—	—	—	GAM_R_ GAIN_24[10]	GAM_R_ GAIN_24[9]	GAM_R_ GAIN_24[8]
		GAM_R_ GAIN_24[7]	GAM_R_ GAIN_24[6]	GAM_R_ GAIN_24[5]	GAM_R_ GAIN_24[4]	GAM_R_ GAIN_24[3]	GAM_R_ GAIN_24[2]	GAM_R_ GAIN_24[1]	GAM_R_ GAIN_24[0]
		—	—	—	—	—	GAM_R_ GAIN_25[10]	GAM_R_ GAIN_25[9]	GAM_R_ GAIN_25[8]
		GAM_R_ GAIN_25[7]	GAM_R_ GAIN_25[6]	GAM_R_ GAIN_25[5]	GAM_R_ GAIN_25[4]	GAM_R_ GAIN_25[3]	GAM_R_ GAIN_25[2]	GAM_R_ GAIN_25[1]	GAM_R_ GAIN_25[0]
	GAM_R_ LUT14	—	—	—	—	—	GAM_R_ GAIN_26[10]	GAM_R_ GAIN_26[9]	GAM_R_ GAIN_26[8]
		GAM_R_ GAIN_26[7]	GAM_R_ GAIN_26[6]	GAM_R_ GAIN_26[5]	GAM_R_ GAIN_26[4]	GAM_R_ GAIN_26[3]	GAM_R_ GAIN_26[2]	GAM_R_ GAIN_26[1]	GAM_R_ GAIN_26[0]
		—	—	—	—	—	GAM_R_ GAIN_27[10]	GAM_R_ GAIN_27[9]	GAM_R_ GAIN_27[8]
		GAM_R_ GAIN_27[7]	GAM_R_ GAIN_27[6]	GAM_R_ GAIN_27[5]	GAM_R_ GAIN_27[4]	GAM_R_ GAIN_27[3]	GAM_R_ GAIN_27[2]	GAM_R_ GAIN_27[1]	GAM_R_ GAIN_27[0]
	GAM_R_ LUT15	—	—	—	—	—	GAM_R_GAI N_28[10]	GAM_R_GAIN _28[9]	GAM_R_GAI N_28[8]
		GAM_R_ GAIN_28[7]	GAM_R_ GAIN_28[6]	GAM_R_ GAIN_28[5]	GAM_R_ GAIN_28[4]	GAM_R_ GAIN_28[3]	GAM_R_ GAIN_28[2]	GAM_R_ GAIN_28[1]	GAM_R_ GAIN_28[0]
		—	—	—	—	—	GAM_R_ GAIN_29[10]	GAM_R_ GAIN_29[9]	GAM_R_ GAIN_29[8]
		GAM_R_ GAIN_29[7]	GAM_R_ GAIN_29[6]	GAM_R_ GAIN_29[5]	GAM_R_ GAIN_29[4]	GAM_R_ GAIN_29[3]	GAM_R_ GAIN_29[2]	GAM_R_ GAIN_29[1]	GAM_R_ GAIN_29[0]
	GAM_R_ LUT16	—	—	—	—	—	GAM_R_ GAIN_30[10]	GAM_R_ GAIN_30[9]	GAM_R_ GAIN_30[8]
		GAM_R_ GAIN_30[7]	GAM_R_ GAIN_30[6]	GAM_R_ GAIN_30[5]	GAM_R_ GAIN_30[4]	GAM_R_ GAIN_30[3]	GAM_R_ GAIN_30[2]	GAM_R_ GAIN_30[1]	GAM_R_ GAIN_30[0]
		—	—	—	—	—	GAM_R_ GAIN_31[10]	GAM_R_ GAIN_31[9]	GAM_R_ GAIN_31[8]
		GAM_R_ GAIN_31[7]	GAM_R_ GAIN_31[6]	GAM_R_ GAIN_31[5]	GAM_R_ GAIN_31[4]	GAM_R_ GAIN_31[3]	GAM_R_ GAIN_31[2]	GAM_R_ GAIN_31[1]	GAM_R_ GAIN_31[0]

chanhvinh.com

Module Name	Register Abbreviation	Bit 31/23/15/7	Bit 30/22/14/6	Bit 29/21/13/5	Bit 28/20/12/4	Bit 27/19/11/3	Bit 26/18/10/2	Bit 25/17/9/1	Bit 24/16/8/0
Video display controller 4	GAM_R_AREA1	—	—	—	—	—	—	—	—
		GAM_R_TH_01[7]	GAM_R_TH_01[6]	GAM_R_TH_01[5]	GAM_R_TH_01[4]	GAM_R_TH_01[3]	GAM_R_TH_01[2]	GAM_R_TH_01[1]	GAM_R_TH_01[0]
		GAM_R_TH_02[7]	GAM_R_TH_02[6]	GAM_R_TH_02[5]	GAM_R_TH_02[4]	GAM_R_TH_02[3]	GAM_R_TH_02[2]	GAM_R_TH_02[1]	GAM_R_TH_02[0]
		GAM_R_TH_03[7]	GAM_R_TH_03[6]	GAM_R_TH_03[5]	GAM_R_TH_03[4]	GAM_R_TH_03[3]	GAM_R_TH_03[2]	GAM_R_TH_03[1]	GAM_R_TH_03[0]
	GAM_R_AREA2	GAM_R_TH_04[7]	GAM_R_TH_04[6]	GAM_R_TH_04[5]	GAM_R_TH_04[4]	GAM_R_TH_04[3]	GAM_R_TH_04[2]	GAM_R_TH_04[1]	GAM_R_TH_04[0]
		GAM_R_TH_05[7]	GAM_R_TH_05[6]	GAM_R_TH_05[5]	GAM_R_TH_05[4]	GAM_R_TH_05[3]	GAM_R_TH_05[2]	GAM_R_TH_05[1]	GAM_R_TH_05[0]
		GAM_R_TH_06[7]	GAM_R_TH_06[6]	GAM_R_TH_06[5]	GAM_R_TH_06[4]	GAM_R_TH_06[3]	GAM_R_TH_06[2]	GAM_R_TH_06[1]	GAM_R_TH_06[0]
		GAM_R_TH_07[7]	GAM_R_TH_07[6]	GAM_R_TH_07[5]	GAM_R_TH_07[4]	GAM_R_TH_07[3]	GAM_R_TH_07[2]	GAM_R_TH_07[1]	GAM_R_TH_07[0]
	GAM_R_AREA3	GAM_R_TH_08[7]	GAM_R_TH_08[6]	GAM_R_TH_08[5]	GAM_R_TH_08[4]	GAM_R_TH_08[3]	GAM_R_TH_08[2]	GAM_R_TH_08[1]	GAM_R_TH_08[0]
		GAM_R_TH_09[7]	GAM_R_TH_09[6]	GAM_R_TH_09[5]	GAM_R_TH_09[4]	GAM_R_TH_09[3]	GAM_R_TH_09[2]	GAM_R_TH_09[1]	GAM_R_TH_09[0]
		GAM_R_TH_10[7]	GAM_R_TH_10[6]	GAM_R_TH_10[5]	GAM_R_TH_10[4]	GAM_R_TH_10[3]	GAM_R_TH_10[2]	GAM_R_TH_10[1]	GAM_R_TH_10[0]
		GAM_R_TH_11[7]	GAM_R_TH_11[6]	GAM_R_TH_11[5]	GAM_R_TH_11[4]	GAM_R_TH_11[3]	GAM_R_TH_11[2]	GAM_R_TH_11[1]	GAM_R_TH_11[0]
	GAM_R_AREA4	GAM_R_TH_12[7]	GAM_R_TH_12[6]	GAM_R_TH_12[5]	GAM_R_TH_12[4]	GAM_R_TH_12[3]	GAM_R_TH_12[2]	GAM_R_TH_12[1]	GAM_R_TH_12[0]
		GAM_R_TH_13[7]	GAM_R_TH_13[6]	GAM_R_TH_13[5]	GAM_R_TH_13[4]	GAM_R_TH_13[3]	GAM_R_TH_13[2]	GAM_R_TH_13[1]	GAM_R_TH_13[0]
		GAM_R_TH_14[7]	GAM_R_TH_14[6]	GAM_R_TH_14[5]	GAM_R_TH_14[4]	GAM_R_TH_14[3]	GAM_R_TH_14[2]	GAM_R_TH_14[1]	GAM_R_TH_14[0]
		GAM_R_TH_15[7]	GAM_R_TH_15[6]	GAM_R_TH_15[5]	GAM_R_TH_15[4]	GAM_R_TH_15[3]	GAM_R_TH_15[2]	GAM_R_TH_15[1]	GAM_R_TH_15[0]

chanhvinh.com

Module Name	Register Abbreviation	Bit 31/23/15/7	Bit 30/22/14/6	Bit 29/21/13/5	Bit 28/20/12/4	Bit 27/19/11/3	Bit 26/18/10/2	Bit 25/17/9/1	Bit 24/16/8/0
Video display controller 4	GAM_R_AREA5	GAM_R_TH_16[7]	GAM_R_TH_16[6]	GAM_R_TH_16[5]	GAM_R_TH_16[4]	GAM_R_TH_16[3]	GAM_R_TH_16[2]	GAM_R_TH_16[1]	GAM_R_TH_16[0]
		GAM_R_TH_17[7]	GAM_R_TH_17[6]	GAM_R_TH_17[5]	GAM_R_TH_17[4]	GAM_R_TH_17[3]	GAM_R_TH_17[2]	GAM_R_TH_17[1]	GAM_R_TH_17[0]
		GAM_R_TH_18[7]	GAM_R_TH_18[6]	GAM_R_TH_18[5]	GAM_R_TH_18[4]	GAM_R_TH_18[3]	GAM_R_TH_18[2]	GAM_R_TH_18[1]	GAM_R_TH_18[0]
		GAM_R_TH_19[7]	GAM_R_TH_19[6]	GAM_R_TH_19[5]	GAM_R_TH_19[4]	GAM_R_TH_19[3]	GAM_R_TH_19[2]	GAM_R_TH_19[1]	GAM_R_TH_19[0]
	GAM_R_AREA6	GAM_R_TH_20[7]	GAM_R_TH_20[6]	GAM_R_TH_20[5]	GAM_R_TH_20[4]	GAM_R_TH_20[3]	GAM_R_TH_20[2]	GAM_R_TH_20[1]	GAM_R_TH_20[0]
		GAM_R_TH_21[7]	GAM_R_TH_21[6]	GAM_R_TH_21[5]	GAM_R_TH_21[4]	GAM_R_TH_21[3]	GAM_R_TH_21[2]	GAM_R_TH_21[1]	GAM_R_TH_21[0]
		GAM_R_TH_22[7]	GAM_R_TH_22[6]	GAM_R_TH_22[5]	GAM_R_TH_22[4]	GAM_R_TH_22[3]	GAM_R_TH_22[2]	GAM_R_TH_22[1]	GAM_R_TH_22[0]
		GAM_R_TH_23[7]	GAM_R_TH_23[6]	GAM_R_TH_23[5]	GAM_R_TH_23[4]	GAM_R_TH_23[3]	GAM_R_TH_23[2]	GAM_R_TH_23[1]	GAM_R_TH_23[0]
	GAM_R_AREA7	GAM_R_TH_24[7]	GAM_R_TH_24[6]	GAM_R_TH_24[5]	GAM_R_TH_24[4]	GAM_R_TH_24[3]	GAM_R_TH_24[2]	GAM_R_TH_24[1]	GAM_R_TH_24[0]
		GAM_R_TH_25[7]	GAM_R_TH_25[6]	GAM_R_TH_25[5]	GAM_R_TH_25[4]	GAM_R_TH_25[3]	GAM_R_TH_25[2]	GAM_R_TH_25[1]	GAM_R_TH_25[0]
		GAM_R_TH_26[7]	GAM_R_TH_26[6]	GAM_R_TH_26[5]	GAM_R_TH_26[4]	GAM_R_TH_26[3]	GAM_R_TH_26[2]	GAM_R_TH_26[1]	GAM_R_TH_26[0]
		GAM_R_TH_27[7]	GAM_R_TH_27[6]	GAM_R_TH_27[5]	GAM_R_TH_27[4]	GAM_R_TH_27[3]	GAM_R_TH_27[2]	GAM_R_TH_27[1]	GAM_R_TH_27[0]
	GAM_R_AREA8	GAM_R_TH_28[7]	GAM_R_TH_28[6]	GAM_R_TH_28[5]	GAM_R_TH_28[4]	GAM_R_TH_28[3]	GAM_R_TH_28[2]	GAM_R_TH_28[1]	GAM_R_TH_28[0]
		GAM_R_TH_29[7]	GAM_R_TH_29[6]	GAM_R_TH_29[5]	GAM_R_TH_29[4]	GAM_R_TH_29[3]	GAM_R_TH_29[2]	GAM_R_TH_29[1]	GAM_R_TH_29[0]
		GAM_R_TH_30[7]	GAM_R_TH_30[6]	GAM_R_TH_30[5]	GAM_R_TH_30[4]	GAM_R_TH_30[3]	GAM_R_TH_30[2]	GAM_R_TH_30[1]	GAM_R_TH_30[0]
		GAM_R_TH_31[7]	GAM_R_TH_31[6]	GAM_R_TH_31[5]	GAM_R_TH_31[4]	GAM_R_TH_31[3]	GAM_R_TH_31[2]	GAM_R_TH_31[1]	GAM_R_TH_31[0]
	TCON_UPDATE	—	—	—	—	—	—	—	—
		—	—	—	—	—	—	—	—
		—	—	—	—	—	—	—	—
		—	—	—	—	—	—	—	TCON_VEN

chanhvinh.com

Module Name	Register Abbreviation	Bit 31/23/15/7	Bit 30/22/14/6	Bit 29/21/13/5	Bit 28/20/12/4	Bit 27/19/11/3	Bit 26/18/10/2	Bit 25/17/9/1	Bit 24/16/8/0
Video display controller 4	TCON_TIM	—	—	—	—	—	TCON_HALF[10]	TCON_HALF[9]	TCON_HALF[8]
		TCON_HALF[7]	TCON_HALF[6]	TCON_HALF[5]	TCON_HALF[4]	TCON_HALF[3]	TCON_HALF[2]	TCON_HALF[1]	TCON_HALF[0]
		—	—	—	—	—	TCON_OFFSET[10]	TCON_OFFSET[9]	TCON_OFFSET[8]
		TCON_OFFSET[7]	TCON_OFFSET[6]	TCON_OFFSET[5]	TCON_OFFSET[4]	TCON_OFFSET[3]	TCON_OFFSET[2]	TCON_OFFSET[1]	TCON_OFFSET[0]
	TCON_TIM_STVA1	—	—	—	—	—	TCON_STVA_VS[10]	TCON_STVA_VS[9]	TCON_STVA_VS[8]
		TCON_STVA_VS[7]	TCON_STVA_VS[6]	TCON_STVA_VS[5]	TCON_STVA_VS[4]	TCON_STVA_VS[3]	TCON_STVA_VS[2]	TCON_STVA_VS[1]	TCON_STVA_VS[0]
		—	—	—	—	—	TCON_STVA_VW[10]	TCON_STVA_VW[9]	TCON_STVA_VW[8]
		TCON_STVA_VW[7]	TCON_STVA_VW[6]	TCON_STVA_VW[5]	TCON_STVA_VW[4]	TCON_STVA_VW[3]	TCON_STVA_VW[2]	TCON_STVA_VW[1]	TCON_STVA_VW[0]
	TCON_TIM_STVA2	—	—	—	—	—	—	—	—
		—	—	—	—	—	—	—	—
		—	—	—	—	—	—	—	—
		—	—	—	TCON_STVA_INV	—	TCON_STVA_SEL[2]	TCON_STVA_SEL[1]	TCON_STVA_SEL[0]
	TCON_TIM_STVB1	—	—	—	—	—	TCON_STVB_VS[10]	TCON_STVB_VS[9]	TCON_STVB_VS[8]
		TCON_STVB_VS[7]	TCON_STVB_VS[6]	TCON_STVB_VS[5]	TCON_STVB_VS[4]	TCON_STVB_VS[3]	TCON_STVB_VS[2]	TCON_STVB_VS[1]	TCON_STVB_VS[0]
		—	—	—	—	—	TCON_STVB_VW[10]	TCON_STVB_VW[9]	TCON_STVB_VW[8]
		TCON_STVB_VW[7]	TCON_STVB_VW[6]	TCON_STVB_VW[5]	TCON_STVB_VW[4]	TCON_STVB_VW[3]	TCON_STVB_VW[2]	TCON_STVB_VW[1]	TCON_STVB_VW[0]
	TCON_TIM_STVB2	—	—	—	—	—	—	—	—
		—	—	—	—	—	—	—	—
		—	—	—	—	—	—	—	—
		—	—	—	TCON_STVB_INV	—	TCON_STVB_SEL[2]	TCON_STVB_SEL[1]	TCON_STVB_SEL[0]

chanhvinh.com

Module Name	Register Abbreviation	Bit 31/23/15/7	Bit 30/22/14/6	Bit 29/21/13/5	Bit 28/20/12/4	Bit 27/19/11/3	Bit 26/18/10/2	Bit 25/17/9/1	Bit 24/16/8/0
Video display controller 4	TCON_TIM_STH1	—	—	—	—	—	TCON_STH_HS[10]	TCON_STH_HS[9]	TCON_STH_HS[8]
		TCON_STH_HS[7]	TCON_STH_HS[6]	TCON_STH_HS[5]	TCON_STH_HS[4]	TCON_STH_HS[3]	TCON_STH_HS[2]	TCON_STH_HS[1]	TCON_STH_HS[0]
		—	—	—	—	—	TCON_STH_HW[10]	TCON_STH_HW[9]	TCON_STH_HW[8]
		TCON_STH_HW[7]	TCON_STH_HW[6]	TCON_STH_HW[5]	TCON_STH_HW[4]	TCON_STH_HW[3]	TCON_STH_HW[2]	TCON_STH_HW[1]	TCON_STH_HW[0]
	TCON_TIM_STH2	—	—	—	—	—	—	—	—
		—	—	—	—	—	—	—	—
		—	—	—	—	—	—	—	TCON_STH_HS_SEL
		—	—	—	TCON_STH_INV	—	TCON_STH_SEL[2]	TCON_STH_SEL[1]	TCON_STH_SEL[0]
	TCON_TIM_STB1	—	—	—	—	—	TCON_STB_HS[10]	TCON_STB_HS[9]	TCON_STB_HS[8]
		TCON_STB_HS[7]	TCON_STB_HS[6]	TCON_STB_HS[5]	TCON_STB_HS[4]	TCON_STB_HS[3]	TCON_STB_HS[2]	TCON_STB_HS[1]	TCON_STB_HS[0]
		—	—	—	—	—	TCON_STB_HW[10]	TCON_STB_HW[9]	TCON_STB_HW[8]
		TCON_STB_HW[7]	TCON_STB_HW[6]	TCON_STB_HW[5]	TCON_STB_HW[4]	TCON_STB_HW[3]	TCON_STB_HW[2]	TCON_STB_HW[1]	TCON_STB_HW[0]
	TCON_TIM_STB2	—	—	—	—	—	—	—	—
		—	—	—	—	—	—	—	—
		—	—	—	—	—	—	—	TCON_STB_HS_SEL
		—	—	—	TCON_STB_INV	—	TCON_STB_SEL[2]	TCON_STB_SEL[1]	TCON_STB_SEL[0]
	TCON_TIM_CPV1	—	—	—	—	—	TCON_CPV_HS[10]	TCON_CPV_HS[9]	TCON_CPV_HS[8]
		TCON_CPV_HS[7]	TCON_CPV_HS[6]	TCON_CPV_HS[5]	TCON_CPV_HS[4]	TCON_CPV_HS[3]	TCON_CPV_HS[2]	TCON_CPV_HS[1]	TCON_CPV_HS[0]
		—	—	—	—	—	TCON_CPV_HW[10]	TCON_CPV_HW[9]	TCON_CPV_HW[8]
		TCON_CPV_HW[7]	TCON_CPV_HW[6]	TCON_CPV_HW[5]	TCON_CPV_HW[4]	TCON_CPV_HW[3]	TCON_CPV_HW[2]	TCON_CPV_HW[1]	TCON_CPV_HW[0]

chanhvinh.com

Module Name	Register Abbreviation	Bit 31/23/15/7	Bit 30/22/14/6	Bit 29/21/13/5	Bit 28/20/12/4	Bit 27/19/11/3	Bit 26/18/10/2	Bit 25/17/9/1	Bit 24/16/8/0
Video display controller 4	TCON_TIM_CPV2	—	—	—	—	—	—	—	—
		—	—	—	—	—	—	—	—
		—	—	—	—	—	—	—	TCON_CPV_HS_SEL
		—	—	—	TCON_CPV_INV	—	TCON_CPV_SEL[2]	TCON_CPV_SEL[1]	TCON_CPV_SEL[0]
	TCON_TIM_POLA1	—	—	—	—	—	TCON_POLA_HS[10]	TCON_POLA_HS[9]	TCON_POLA_HS[8]
		TCON_POLA_HS[7]	TCON_POLA_HS[6]	TCON_POLA_HS[5]	TCON_POLA_HS[4]	TCON_POLA_HS[3]	TCON_POLA_HS[2]	TCON_POLA_HS[1]	TCON_POLA_HS[0]
		—	—	—	—	—	TCON_POLA_HW[10]	TCON_POLA_HW[9]	TCON_POLA_HW[8]
		TCON_POLA_HW[7]	TCON_POLA_HW[6]	TCON_POLA_HW[5]	TCON_POLA_HW[4]	TCON_POLA_HW[3]	TCON_POLA_HW[2]	TCON_POLA_HW[1]	TCON_POLA_HW[0]
	TCON_TIM_POLA2	—	—	—	—	—	—	—	—
		—	—	—	—	—	—	—	—
		—	—	TCON_POLA_MD[1]	TCON_POLA_MD[0]	—	—	—	TCON_POLA_HS_SEL
		—	—	—	TCON_POLA_INV	—	TCON_POLA_SEL[2]	TCON_POLA_SEL[1]	TCON_POLA_SEL[0]
	TCON_TIM_POLB1	—	—	—	—	—	TCON_POLB_HS[10]	TCON_POLB_HS[9]	TCON_POLB_HS[8]
		TCON_POLB_HS[7]	TCON_POLB_HS[6]	TCON_POLB_HS[5]	TCON_POLB_HS[4]	TCON_POLB_HS[3]	TCON_POLB_HS[2]	TCON_POLB_HS[1]	TCON_POLB_HS[0]
		—	—	—	—	—	TCON_POLB_HW[10]	TCON_POLB_HW[9]	TCON_POLB_HW[8]
		TCON_POLB_HW[7]	TCON_POLB_HW[6]	TCON_POLB_HW[5]	TCON_POLB_HW[4]	TCON_POLB_HW[3]	TCON_POLB_HW[2]	TCON_POLB_HW[1]	TCON_POLB_HW[0]
	TCON_TIM_POLB2	—	—	—	—	—	—	—	—
		—	—	—	—	—	—	—	—
		—	—	TCON_POLB_MD[1]	TCON_POLB_MD[0]	—	—	—	TCON_POLB_HS_SEL
		—	—	—	TCON_POLB_INV	—	TCON_POLB_SEL[2]	TCON_POLB_SEL[1]	TCON_POLB_SEL[0]

chanhvinh.com

Module Name	Register Abbreviation	Bit 31/23/15/7	Bit 30/22/14/6	Bit 29/21/13/5	Bit 28/20/12/4	Bit 27/19/11/3	Bit 26/18/10/2	Bit 25/17/9/1	Bit 24/16/8/0
Video display controller 4	TCON_TIM_DE	—	—	—	—	—	—	—	—
		—	—	—	—	—	—	—	—
		—	—	—	—	—	—	—	—
		—	—	—	—	—	—	—	TCON_DE_INV
	OUT_UPDATE	—	—	—	—	—	—	—	—
		—	—	—	—	—	—	—	—
		—	—	—	—	—	—	—	—
		—	—	—	—	—	—	—	OUTCNT_VEN
	OUT_SET	—	—	—	OUT_ENDIAN_ON	—	—	—	OUT_SWAP_ON
		—	—	—	—	—	—	—	—
		—	—	OUT_FORMAT[1]	OUT_FORMAT[0]	—	—	OUT_FRQ_SEL[1]	OUT_FRQ_SEL[0]
		—	—	—	OUT_DIR_SEL	—	—	OUT_PHASE[1]	OUT_PHASE[0]
	OUT_BRIGHT1	—	—	—	—	—	—	—	—
		—	—	—	—	—	—	—	—
		—	—	—	—	—	—	PBRT_G[9]	PBRT_G[8]
		PBRT_G[7]	PBRT_G[6]	PBRT_G[5]	PBRT_G[4]	PBRT_G[3]	PBRT_G[2]	PBRT_G[1]	PBRT_G[0]
	OUT_BRIGHT2	—	—	—	—	—	—	PBRT_B[9]	PBRT_B[8]
		PBRT_B[7]	PBRT_B[6]	PBRT_B[5]	PBRT_B[4]	PBRT_B[3]	PBRT_B[2]	PBRT_B[1]	PBRT_B[0]
		—	—	—	—	—	—	PBRT_R[9]	PBRT_R[8]
		PBRT_R[7]	PBRT_R[6]	PBRT_R[5]	PBRT_R[4]	PBRT_R[3]	PBRT_R[2]	PBRT_R[1]	PBRT_R[0]
	OUT_CONTRAST	—	—	—	—	—	—	—	—
		CONT_G[7]	CONT_G[6]	CONT_G[5]	CONT_G[4]	CONT_G[3]	CONT_G[2]	CONT_G[1]	CONT_G[0]
		CONT_B[7]	CONT_B[6]	CONT_B[5]	CONT_B[4]	CONT_B[3]	CONT_B[2]	CONT_B[1]	CONT_B[0]
		CONT_R[7]	CONT_R[6]	CONT_R[5]	CONT_R[4]	CONT_R[3]	CONT_R[2]	CONT_R[1]	CONT_R[0]

chanhvinh.com

Module Name	Register Abbreviation	Bit 31/23/15/7	Bit 30/22/14/6	Bit 29/21/13/5	Bit 28/20/12/4	Bit 27/19/11/3	Bit 26/18/10/2	Bit 25/17/9/1	Bit 24/16/8/0
Video display controller 4	OUT_PDTHA	—	—	—	—	—	—	—	—
		—	—	PDTH_SEL[1]	PDTH_SEL[0]	—	—	PDTH_FORMAT[1]	PDTH_FORMAT[0]
		—	—	PDTH_PA[1]	PDTH_PA[0]	—	—	PDTH_PB[1]	PDTH_PB[0]
		—	—	PDTH_PC[1]	PDTH_PC[0]	—	—	PDTH_PD[1]	PDTH_PD[0]
	OUT_CLK_PHASE	—	—	—	—	—	—	—	—
		—	—	—	—	—	—	—	—
		—	—	—	OUTCNT_FRONT_GAM	—	—	—	OUTCNT_LCD_EDGE
		—	OUTCNT_STVA_EDGE	OUTCNT_STVB_EDGE	OUTCNT_STH_EDGE	OUTCNT_STB_EDGE	OUTCNT_CPV_EDGE	OUTCNT_POLA_EDGE	OUTCNT_POLB_EDGE
	SYSCNT_INT1	—	—	—	—	—	—	—	—
		—	—	—	—	—	—	—	—
		—	—	—	—	—	—	—	—
		—	—	—	—	—	—	—	INT_STA8
	SYSCNT_INT2	—	—	—	INT_STA7	—	—	—	INT_STA6
		—	—	—	INT_STA5	—	—	—	INT_STA4
		—	—	—	INT_STA3	—	—	—	INT_STA2
		—	—	—	INT_STA1	—	—	—	INT_STA0
	SYSCNT_INT3	—	—	—	—	—	—	—	—
		—	—	—	—	—	—	—	—
		—	—	—	—	—	—	—	—
		—	—	—	—	—	—	—	INT_OUT8_ON
	SYSCNT_INT4	—	—	—	INT_OUT7_ON	—	—	—	INT_OUT6_ON
		—	—	—	INT_OUT5_ON	—	—	—	INT_OUT4_ON
		—	—	—	INT_OUT3_ON	—	—	—	INT_OUT2_ON
		—	—	—	INT_OUT1_ON	—	—	—	INT_OUT0_ON

chanhvinh.com

Module Name	Register Abbreviation	Bit 31/23/15/7	Bit 30/22/14/6	Bit 29/21/13/5	Bit 28/20/12/4	Bit 27/19/11/3	Bit 26/18/10/2	Bit 25/17/9/1	Bit 24/16/8/0
Video display controller 4	SYSCNT_ PANEL_CLK	—	—	PANEL_ ICKSEL[1]	PANEL_ ICKSEL[0]	—	—	—	PANEL_ ICKEN
		—	—	PANEL_ DCDR[5]	PANEL_ DCDR[4]	PANEL_ DCDR[3]	PANEL_ DCDR[2]	PANEL_ DCDR[1]	PANEL_ DCDR[0]
	SYSCNT_ CLUT	—	—	—	—	—	—	—	GR3_CLT_ SEL_ST
		—	—	—	GR2_CLT_ SEL_ST	—	—	—	GR1_CLT_ SEL_ST
Image renderer	CR	—	—	—	—	—	—	—	—
		—	—	—	—	—	—	—	—
		SWRST	—	—	—	—	—	—	—
		—	—	RESUME	STOP	—	—	ARS	RS
	SR	—	—	—	—	—	—	—	—
		—	—	—	—	—	—	—	—
		—	—	—	—	—	—	—	—
		—	DSA	—	STP	—	INT	IER	TRA
	SRCR	—	—	—	—	—	—	—	—
		—	—	—	—	—	—	—	—
		—	—	—	—	—	—	—	—
		—	—	—	STPCLR	—	INTCLR	IERCLR	TRACLR
	ICR	—	—	—	—	—	—	—	—
		—	—	—	—	—	—	—	—
		—	—	—	—	—	—	—	—
		—	—	—	STPENB	—	INTENB	IERENB	TRAENB
	IMR	—	—	—	—	—	—	—	—
		—	—	—	—	—	—	—	—
		—	—	—	—	—	—	—	—
		—	—	—	STM	—	INM	IEM	TRAM
	DLPR	DLP[31]	DLP[30]	DLP[29]	DLP[28]	DLP[27]	DLP[26]	DLP[25]	DLP[24]
		DLP[23]	DLP[22]	DLP[21]	DLP[20]	DLP[19]	DLP[18]	DLP[17]	DLP[16]
		DLP[15]	DLP[14]	DLP[13]	DLP[12]	DLP[11]	DLP[10]	DLP[9]	DLP[8]
		DLP[7]	DLP[6]	DLP[5]	DLP[4]	DLP[3]	DLP[2]	DLP[1]	DLP[0]

chanhvinh.com

Module Name	Register Abbreviation	Bit 31/23/15/7	Bit 30/22/14/6	Bit 29/21/13/5	Bit 28/20/12/4	Bit 27/19/11/3	Bit 26/18/10/2	Bit 25/17/9/1	Bit 24/16/8/0
Image renderer	DLSAR	DLSA[31]	DLSA[30]	DLSA[29]	DLSA[28]	DLSA[27]	DLSA[26]	DLSA[25]	DLSA[24]
		DLSA[23]	DLSA[22]	DLSA[21]	DLSA[20]	DLSA[19]	DLSA[18]	DLSA[17]	DLSA[16]
		DLSA[15]	DLSA[14]	DLSA[13]	DLSA[12]	DLSA[11]	DLSA[10]	DLSA[9]	DLSA[8]
		DLSA[7]	DLSA[6]	DLSA[5]	DLSA[4]	DLSA[3]	DLSA[2]	DLSA[1]	DLSA[0]
	DSAR	DSAR[31]	DSAR[30]	DSAR[29]	DSAR[28]	DSAR[27]	DSAR[26]	DSAR[25]	DSAR[24]
		DSAR[23]	DSAR[22]	DSAR[21]	DSAR[20]	DSAR[19]	DSAR[18]	DSAR[17]	DSAR[16]
		DSAR[15]	DSAR[14]	DSAR[13]	DSAR[12]	DSAR[11]	DSAR[10]	DSAR[9]	DSAR[8]
		DSAR[7]	DSAR[6]	DSAR[5]	DSAR[4]	DSAR[3]	DSAR[2]	DSAR[1]	DSAR[0]
	DSTR	—	—	—	—	—	—	—	—
		—	—	—	—	—	—	—	—
		—	—	—	DSTR[12]	DSTR[11]	DSTR[10]	DSTR[9]	DSTR[8]
		DSTR[7]	DSTR[6]	DSTR[5]	DSTR[4]	DSTR[3]	DSTR[2]	DSTR[1]	DSTR[0]
	DSAR2	DSAR2[31]	DSAR2[30]	DSAR2[29]	DSAR2[28]	DSAR2[27]	DSAR2[26]	DSAR2[25]	DSAR2[24]
		DSAR2[23]	DSAR2[22]	DSAR2[21]	DSAR2[20]	DSAR2[19]	DSAR2[18]	DSAR2[17]	DSAR2[16]
		DSAR2[15]	DSAR2[14]	DSAR2[13]	DSAR2[12]	DSAR2[11]	DSAR2[10]	DSAR2[9]	DSAR2[8]
		DSAR2[7]	DSAR2[6]	DSAR2[5]	DSAR2[4]	DSAR2[3]	DSAR2[2]	DSAR2[1]	DSAR2[0]
	DLSAR2	DLSA[31]	DLSA[30]	DLSA[29]	DLSA[28]	DLSA[27]	DLSA[26]	DLSA[25]	DLSA[24]
		DLSA[23]	DLSA[22]	DLSA[21]	DLSA[20]	DLSA[19]	DLSA[18]	DLSA[17]	DLSA[16]
		DLSA[15]	DLSA[14]	DLSA[13]	DLSA[12]	DLSA[11]	DLSA[10]	DLSA[9]	DLSA[8]
		DLSA[7]	DLSA[6]	DLSA[5]	DLSA[4]	DLSA[3]	DLSA[2]	DLSA[1]	DLSA[0]
	TRIMR	—	—	—	—	—	—	—	—
		—	—	—	—	—	—	—	—
		—	—	—	—	—	—	—	—
		—	TCM	DUDVM	DXDYM	AUTOSG	AUTODG	BFE	TME
	TRIMSR	—	—	—	—	—	—	—	—
		—	—	—	—	—	—	—	—
		—	—	—	—	—	—	—	—
		—	TCMS	DUDVMS	DXDYMS	AUTOSGS	AUTODGS	BFES	TMES
	TRIMCR	—	—	—	—	—	—	—	—
		—	—	—	—	—	—	—	—
		—	—	—	—	—	—	—	—
		—	TCMC	DUDVMC	DXDYMC	AUTOSGC	AUTODGC	BFEC	TMEC

chanhvinh.com

Module Name	Register Abbreviation	Bit 31/23/15/7	Bit 30/22/14/6	Bit 29/21/13/5	Bit 28/20/12/4	Bit 27/19/11/3	Bit 26/18/10/2	Bit 25/17/9/1	Bit 24/16/8/0
Image renderer	TRICR	—	—	—	—	—	—	—	—
		TCV[7]	TCV[6]	TCV[5]	TCV[4]	TCV[3]	TCV[2]	TCV[1]	TCV[0]
		TCU[7]	TCU[6]	TCU[5]	TCU[4]	TCU[3]	TCU[2]	TCU[1]	TCU[0]
		TCY[7]	TCY[6]	TCY[5]	TCY[4]	TCY[3]	TCY[2]	TCY[1]	TCY[0]
	UVDPOR	—	—	—	—	—	—	—	—
		—	—	—	—	—	—	—	—
		—	—	—	—	—	—	—	DDP
		—	—	—	—	—	UVDPO[2]	UVDPO[1]	UVDPO[0]
	SUSR	—	—	—	—	—	—	SUW[9]	SUW[8]
		SUW[7]	SUW[6]	SUW[5]	SUW[4]	SUW[3]	SUW[2]	SUW[1]	SUW[0]
		—	—	—	—	—	—	SVW[9]	SVW[8]
		SVW[7]	SVW[6]	SVW[5]	SVW[4]	SVW[3]	SVW[2]	SVW[1]	SVW[0]
	SVSR	—	—	—	—	—	—	—	—
		—	—	—	—	—	—	—	—
		—	—	—	—	—	—	SVSR[9]	SVSR[8]
		SVSR[7]	SVSR[6]	SVSR[5]	SVSR[4]	SVSR[3]	SVSR[2]	SVSR[1]	SVSR[0]
	XMINR	—	—	—	—	—	—	—	—
		—	—	—	—	—	—	—	—
		—	—	—	—	XMIN[11]	XMIN[10]	XMIN[9]	XMIN[8]
		XMIN[7]	XMIN[6]	XMIN[5]	XMIN[4]	XMIN[3]	XMIN[2]	XMIN[1]	XMIN[0]
	YMINR	—	—	—	—	—	—	—	—
		—	—	—	—	—	—	—	—
		—	—	—	—	YMIN[11]	YMIN[10]	YMIN[9]	YMIN[8]
		YMIN[7]	YMIN[6]	YMIN[5]	YMIN[4]	YMIN[3]	YMIN[2]	YMIN[1]	YMIN[0]
	XMAXR	—	—	—	—	—	—	—	—
		—	—	—	—	—	—	—	—
		—	—	—	—	XMAX[11]	XMAX[10]	XMAX[9]	XMAX[8]
		XMAX[7]	XMAX[6]	XMAX[5]	XMAX[4]	XMAX[3]	XMAX[2]	XMAX[1]	XMAX[0]
	YMAXR	—	—	—	—	—	—	—	—
		—	—	—	—	—	—	—	—
		—	—	—	—	YMAX[11]	YMAX[10]	YMAX[9]	YMAX[8]
		YMAX[7]	YMAX[6]	YMAX[5]	YMAX[4]	YMAX[3]	YMAX[2]	YMAX[1]	YMAX[0]

chanhvinh.com

Module Name	Register Abbreviation	Bit 31/23/15/7	Bit 30/22/14/6	Bit 29/21/13/5	Bit 28/20/12/4	Bit 27/19/11/3	Bit 26/18/10/2	Bit 25/17/9/1	Bit 24/16/8/0
Image renderer	AMXSR	—	—	—	—	—	—	—	—
		—	—	—	—	—	—	—	—
		—	—	—	—	—	—	AMXS[9]	AMXS[8]
		AMXS[7]	AMXS[6]	AMXS[5]	AMXS[4]	AMXS[3]	AMXS[2]	AMXS[1]	AMXS[0]
	AMYSR	—	—	—	—	—	—	—	—
		—	—	—	—	—	—	—	—
		—	—	—	—	—	—	AMYS[9]	AMYS[8]
		AMYS[7]	AMYS[6]	AMYS[5]	AMYS[4]	AMYS[3]	AMYS[2]	AMYS[1]	AMYS[0]
	AMXOR	—	—	—	—	—	—	—	—
		—	—	—	—	—	—	—	—
		—	—	—	—	—	—	AMXO[9]	AMXO[8]
		AMXO[7]	AMXO[6]	AMXO[5]	AMXO[4]	AMXO[3]	AMXO[2]	AMXO[1]	AMXO[0]
	AMYOR	—	—	—	—	—	—	—	—
		—	—	—	—	—	—	—	—
		—	—	—	—	—	—	AMYO[9]	AMYO[8]
		AMYO[7]	AMYO[6]	AMYO[5]	AMYO[4]	AMYO[3]	AMYO[2]	AMYO[1]	AMYO[0]
	MACR1	—	—	—	—	—	—	—	—
		—	—	—	—	—	—	—	—
		—	—	—	EMAM	—	—	LWSWAP	—
		—	—	—	—	—	—	—	—
	LSPR	—	—	—	—	—	—	—	—
		—	—	—	—	—	—	—	—
		—	—	—	—	—	—	LSPR[9]	LSPR[8]
		LSPR[7]	LSPR[6]	LSPR[5]	LSPR[4]	LSPR[3]	LSPR[2]	LSPR[1]	LSPR[0]
	LEPR	—	—	—	—	—	—	—	—
		—	—	—	—	—	—	—	—
		—	—	—	—	—	—	LEPR[9]	LEPR[8]
		LEPR[7]	LEPR[6]	LEPR[5]	LEPR[4]	LEPR[3]	LEPR[2]	LEPR[1]	LEPR[0]
	LMSR	—	—	—	—	—	—	—	—
		—	—	—	—	—	—	—	—
		—	—	—	—	—	—	—	—
		—	—	—	—	—	LMSR[2]	LMSR[1]	LMSR[0]

chanhvinh.com

Module Name	Register Abbreviation	Bit 31/23/15/7	Bit 30/22/14/6	Bit 29/21/13/5	Bit 28/20/12/4	Bit 27/19/11/3	Bit 26/18/10/2	Bit 25/17/9/1	Bit 24/16/8/0
Display out comparison unit	DOCMCR	—	—	—	—	—	—	—	—
		—	—	—	—	—	—	—	CMPRU
		—	—	—	—	—	—	—	—
		—	—	—	—	—	—	—	CMPR
	DOCMSTR	—	—	—	—	—	—	—	—
		—	—	—	—	—	—	—	—
		—	—	—	—	—	—	—	—
		—	—	—	—	—	—	—	CMPST
	DOCMCLSTR	—	—	—	—	—	—	—	—
		—	—	—	—	—	—	—	—
		—	—	—	—	—	—	—	—
		—	—	—	—	—	—	—	CMPCLST
	DOCMIENR	—	—	—	—	—	—	—	—
		—	—	—	—	—	—	—	—
		—	—	—	—	—	—	—	—
		—	—	—	—	—	—	—	CMPIEN
	DOCMPMR	—	—	—	—	—	—	—	—
		—	—	—	—	—	—	—	CMPBT
		CMPDFA[7]	CMPDFA[6]	CMPDFA[5]	CMPDFA[4]	CMPDFA[3]	CMPDFA[2]	CMPDFA[1]	CMPDFA[0]
		CMPDAUF	—	—	—	CMPSELP[3]	CMPSELP[2]	CMPSELP[1]	CMPSELP[0]
	DOCMECRCR	CMPECRC [31]	CMPECRC [30]	CMPECRC [29]	CMPECRC [28]	CMPECRC [27]	CMPECRC [26]	CMPECRC [25]	CMPECRC [24]
		CMPECRC [23]	CMPECRC [22]	CMPECRC [21]	CMPECRC [20]	CMPECRC [19]	CMPECRC [18]	CMPECRC [17]	CMPECRC [16]
		CMPECRC [15]	CMPECRC [14]	CMPECRC [13]	CMPECRC [12]	CMPECRC [11]	CMPECRC [10]	CMPECRC [9]	CMPECRC [8]
		CMPECRC[7]	CMPECRC[6]	CMPECRC[5]	CMPECRC[4]	CMPECRC[3]	CMPECRC[2]	CMPECRC[1]	CMPECRC[0]
	DOCMCCRCR	CMPCCRC [31]	CMPCCRC [30]	CMPCCRC [29]	CMPCCRC [28]	CMPCCRC [27]	CMPCCR C[26]	CMPCCRC [25]	CMPCCRC [24]
		CMPCCRC [23]	CMPCCRC [22]	CMPCCRC [21]	CMPCCRC [20]	CMPCCRC [19]	CMPCCRC [18]	CMPCCRC [17]	CMPCCRC [16]
		CMPCCRC [15]	CMPCCRC [14]	CMPCCRC [13]	CMPCCRC [12]	CMPCCRC [11]	CMPCCRC [10]	CMPCCRC [9]	CMPCCRC [8]
		CMPCCRC[7]	CMPCCRC[6]	CMPCCRC[5]	CMPCCRC[4]	CMPCCRC[3]	CMPCCRC[2]	CMPCCRC[1]	CMPCCRC[0]

chanhvinh.com

Module Name	Register Abbreviation	Bit 31/23/15/7	Bit 30/22/14/6	Bit 29/21/13/5	Bit 28/20/12/4	Bit 27/19/11/3	Bit 26/18/10/2	Bit 25/17/9/1	Bit 24/16/8/0
Display out comparison unit	DOCMSPXR	—	—	—	—	—	—	—	—
		—	—	—	—	—	—	—	—
		—	—	—	—	—	CMPSPX[10]	CMPSPX[9]	CMPSPX[8]
		CMPSPX[7]	CMPSPX[6]	CMPSPX[5]	CMPSPX[4]	CMPSPX[3]	CMPSPX[2]	CMPSPX[1]	CMPSPX[0]
	DOCMSPYR	—	—	—	—	—	—	—	—
		—	—	—	—	—	—	—	—
		—	—	—	—	—	CMPSPY[10]	CMPSPY[9]	CMPSPY[8]
		CMPSPY[7]	CMPSPY[6]	CMPSPY[5]	CMPSPY[4]	CMPSPY[3]	CMPSPY[2]	CMPSPY[1]	CMPSPY[0]
	DOCMSZXR	—	—	—	—	—	—	—	—
		—	—	—	—	—	—	—	—
		—	—	—	—	—	CMPSZX[10]	CMPSZX[9]	CMPSZX[8]
		CMPSZX[7]	CMPSZX[6]	CMPSZX[5]	CMPSZX[4]	CMPSZX[3]	CMPSZX[2]	CMPSZX[1]	CMPSZX[0]
	DOCMSZYR	—	—	—	—	—	—	—	—
		—	—	—	—	—	—	—	—
		—	—	—	—	—	CMPSZY[10]	CMPSZY[9]	CMPSZY[8]
		CMPSZY[7]	CMPSZY[6]	CMPSZY[5]	CMPSZY[4]	CMPSZY[3]	CMPSZY[2]	CMPSZY[1]	CMPSZY[0]
	DOCMCRCIR	CRCINI[31]	CRCINI[30]	CRCINI[29]	CRCINI[28]	CRCINI[27]	CRCINI[26]	CRCINI[25]	CRCINI[24]
		CRCINI[23]	CRCINI[22]	CRCINI[21]	CRCINI[20]	CRCINI[19]	CRCINI[18]	CRCINI[17]	CRCINI[16]
		CRCINI[15]	CRCINI[14]	CRCINI[13]	CRCINI[12]	CRCINI[11]	CRCINI[10]	CRCINI[9]	CRCINI[8]
		CRCINI[7]	CRCINI[6]	CRCINI[5]	CRCINI[4]	CRCINI[3]	CRCINI[2]	CRCINI[1]	CRCINI[0]
JPEG codec unit	JCMOD	—	—	—	—	DSP	REDU[2]	REDU[1]	REDU[0]
	JCCMD	BRST	—	—	—	—	JEND	JRST	JSRT
	JCQTN	—	—	QT3[1]	QT3[0]	QT2[1]	QT2[0]	QT1[1]	QT1[0]
	JCHTN	—	—	HTA3	HTD3	HTA2	HTD2	HTA1	HTD1
	JCDRIU	DRIU[7]	DRIU[6]	DRIU[5]	DRIU[4]	DRIU[3]	DRIU[2]	DRIU[1]	DRIU[0]
	JCDRID	DRID[7]	DRID[6]	DRID[5]	DRID[4]	DRID[3]	DRID[2]	DRID[1]	DRID[0]
	JCVSZU	VSZU[7]	VSZU[6]	VSZU[5]	VSZU[4]	VSZU[3]	VSZU[2]	VSZU[1]	VSZU[0]
	JCVSZD	VSZD[7]	VSZD[6]	VSZD[5]	VSZD[4]	VSZD[3]	VSZD[2]	VSZD[1]	VSZD[0]
	JCHSZU	HSZU[7]	HSZU[6]	HSZU[5]	HSZU[4]	HSZU[3]	HSZU[2]	HSZU[1]	HSZU[0]
	JCHSZD	HSZD[7]	HSZD[6]	HSZD[5]	HSZD[4]	HSZD[3]	HSZD[2]	HSZD[1]	HSZD[0]
	JCDTCU	DCU[7]	DCU[6]	DCU[5]	DCU[4]	DCU[3]	DCU[2]	DCU[1]	DCU[0]
	JCDTCM	DCM[7]	DCM[6]	DCM[5]	DCM[4]	DCM[3]	DCM[2]	DCM[1]	DCM[0]

chanhvinh.com

Module Name	Register Abbreviation	Bit 31/23/15/7	Bit 30/22/14/6	Bit 29/21/13/5	Bit 28/20/12/4	Bit 27/19/11/3	Bit 26/18/10/2	Bit 25/17/9/1	Bit 24/16/8/0
JPEG codec unit	JCDTCD	DCD[7]	DCD[6]	DCD[5]	DCD[4]	DCD[3]	DCD[2]	DCD[1]	DCD[0]
	JINTE0	INT7	INT6	INT5	—	INT3	—	—	—
	JINTS0	—	INS6	INS5	—	INS3	—	—	—
	JCDERR	—	—	—	—	ERR[3]	ERR[2]	ERR[1]	ERR[0]
	JCRST	—	—	—	—	—	—	—	RST
	JIFECNT	—	—	—	—	—	—	—	—
		—	—	—	—	—	—	—	—
		—	—	—	—	—	JOUTSWAP [2]	JOUTSWAP [1]	JOUTSWAP [0]
		—	DINRINI	DINRCMD	DINLC	—	DINSWAP[2]	DINSWAP[1]	DINSWAP[0]
	JIFESA	ESA[31]	ESA[30]	ESA[29]	ESA[28]	ESA[27]	ESA[26]	ESA[25]	ESA[24]
		ESA[23]	ESA[22]	ESA[21]	ESA[20]	ESA[19]	ESA[18]	ESA[17]	ESA[16]
		ESA[15]	ESA[14]	ESA[13]	ESA[12]	ESA[11]	ESA[10]	ESA[9]	ESA[8]
		ESA[7]	ESA[6]	ESA[5]	ESA[4]	ESA[3]	ESA[2]	ESA[1]	ESA[0]
	JIFESOFST	—	—	—	—	—	—	—	—
		—	—	—	—	—	—	—	—
		—	ESMW[14]	ESMW[13]	ESMW[12]	ESMW[11]	ESMW[10]	ESMW[9]	ESMW[8]
		ESMW[7]	ESMW[6]	ESMW[5]	ESMW[4]	ESMW[3]	ESMW[2]	ESMW[1]	ESMW[0]
	JIFEDA	EDA[31]	EDA[30]	EDA[29]	EDA[28]	EDA[27]	EDA[26]	EDA[25]	EDA[24]
		EDA[23]	EDA[22]	EDA[21]	EDA[20]	EDA[19]	EDA[18]	EDA[17]	EDA[16]
		EDA[15]	EDA[14]	EDA[13]	EDA[12]	EDA[11]	EDA[10]	EDA[9]	EDA[8]
		EDA[7]	EDA[6]	EDA[5]	EDA[4]	EDA[3]	EDA[2]	EDA[1]	EDA[0]
	JIFESLC	—	—	—	—	—	—	—	—
		—	—	—	—	—	—	—	—
		LINES[15]	LINES[14]	LINES[13]	LINES[12]	LINES[11]	LINES[10]	LINES[9]	LINES[8]
		LINES[7]	LINES[6]	LINES[5]	LINES[4]	LINES[3]	LINES[2]	LINES[1]	LINES[0]

chanhvinh.com

Module Name	Register Abbreviation	Bit 31/23/15/7	Bit 30/22/14/6	Bit 29/21/13/5	Bit 28/20/12/4	Bit 27/19/11/3	Bit 26/18/10/2	Bit 25/17/9/1	Bit 24/16/8/0
JPEG codec unit	JIFDCNT	—	—	VINTER[1]	VINTER[0]	HINTER[1]	HINTER[0]	OPF[1]	OPF[0]
		—	—	—	—	—	—	—	—
		—	JINRINI	JINRCMD	JINC	—	JINSWAP[2]	JINSWAP[1]	JINSWAP[0]
		—	DOUTRINI	DOUTRCMD	DOUTLC	—	DOUTSWAP[2]	DOUTSWAP[1]	DOUTSWAP[0]
	JIFDSA	DSA[31]	DSA[30]	DSA[29]	DSA[28]	DSA[27]	DSA[26]	DSA[25]	DSA[24]
		DSA[23]	DSA[22]	DSA[21]	DSA[20]	DSA[19]	DSA[18]	DSA[17]	DSA[16]
		DSA[15]	DSA[14]	DSA[13]	DSA[12]	DSA[11]	DSA[10]	DSA[9]	DSA[8]
		DSA[7]	DSA[6]	DSA[5]	DSA[4]	DSA[3]	DSA[2]	DSA[1]	DSA[0]
	JIFDDOFST	—	—	—	—	—	—	—	—
		—	—	—	—	—	—	—	—
		—	DDMW[14]	DDMW[13]	DDMW[12]	DDMW[11]	DDMW[10]	DDMW[9]	DDMW[8]
		DDMW[7]	DDMW[6]	DDMW[5]	DDMW[4]	DDMW[3]	DDMW[2]	DDMW[1]	DDMW[0]
	JIFDDA	DDA[31]	DDA[30]	DDA[29]	DDA[28]	DDA[27]	DDA[26]	DDA[25]	DDA[24]
		DDA[23]	DDA[22]	DDA[21]	DDA[20]	DDA[19]	DDA[18]	DDA[17]	DDA[16]
		DDA[15]	DDA[14]	DDA[13]	DDA[12]	DDA[11]	DDA[10]	DDA[9]	DDA[8]
		DDA[7]	DDA[6]	DDA[5]	DDA[4]	DDA[3]	DDA[2]	DDA[1]	DDA[0]
	JIFDSDC	—	—	—	—	—	—	—	—
		—	—	—	—	—	—	—	—
		JDATAS[15]	JDATAS[14]	JDATAS[13]	JDATAS[12]	JDATAS[11]	JDATAS[10]	JDATAS[9]	JDATAS[8]
		JDATAS[7]	JDATAS[6]	JDATAS[5]	JDATAS[4]	JDATAS[3]	JDATAS[2]	JDATAS[1]	JDATAS[0]
	JIFDDLC	—	—	—	—	—	—	—	—
		—	—	—	—	—	—	—	—
		LINES[15]	LINES[14]	LINES[13]	LINES[12]	LINES[11]	LINES[10]	LINES[9]	LINES[8]
		LINES[7]	LINES[6]	LINES[5]	LINES[4]	LINES[3]	LINES[2]	LINES[1]	LINES[0]
	JIFDADT	—	—	—	—	—	—	—	—
		—	—	—	—	—	—	—	—
		—	—	—	—	—	—	—	—
		ALPHA[7]	ALPHA[6]	ALPHA[5]	ALPHA[4]	ALPHA[3]	ALPHA[2]	ALPHA[1]	ALPHA[0]

chanhvinh.com

Module Name	Register Abbreviation	Bit 31/23/15/7	Bit 30/22/14/6	Bit 29/21/13/5	Bit 28/20/12/4	Bit 27/19/11/3	Bit 26/18/10/2	Bit 25/17/9/1	Bit 24/16/8/0
JPEG codec unit	JINTE1	—	—	—	—	—	—	—	—
		—	—	—	—	—	—	—	—
		—	—	—	—	—	—	—	—
		—	CBTEN	DINLEN	—	—	DBTEN	JINEN	DOUTLEN
	JINTS1	—	—	—	—	—	—	—	—
		—	—	—	—	—	—	—	—
		—	—	—	—	—	—	—	—
		—	CBTF	DINLF	—	—	DBTF	JINF	DOUTLF
Sampling rate converter	SRCID_0								
	SRCOD_0								
	SRCIDCTRL_0	—	—	—	—	—	—	IED	IEN
		—	—	—	—	—	—	IFTRG[1]	IFTRG[0]
	SRCODCTRL_0	—	—	—	—	—	OCH	OED	OEN
		—	—	—	—	—	—	OFTRG[1]	OFTRG[0]
	SRCCTRL_0	—	—	CEEN	SRCEN	UDEN	OVEN	FL	CL
		IFS[3]	IFS[2]	IFS[1]	IFS[0]	—	OFS[2]	OFS[1]	OFS[0]
	SRCSTAT_0	OFDN[4]	OFDN[3]	OFDN[2]	OFDN[1]	OFDN[0]	IFDN[3]	IFDN[2]	IFDN[1]
		IFDN[0]	—	CEF	FLF	UDF	OVF	IINT	OINT
	SRCID_1								
	SRCOD_1								

chanhvinh.com

Module Name	Register Abbreviation	Bit 31/23/15/7	Bit 30/22/14/6	Bit 29/21/13/5	Bit 28/20/12/4	Bit 27/19/11/3	Bit 26/18/10/2	Bit 25/17/9/1	Bit 24/16/8/0
Sampling rate converter	SRCIDCTRL_1	—	—	—	—	—	—	IED	IEN
		—	—	—	—	—	—	IFTRG[1]	IFTRG[0]
	SRCODCTRL_1	—	—	—	—	—	OCH	OED	OEN
		—	—	—	—	—	—	OFTRG[1]	OFTRG[0]
	SRCCTRL_1	—	—	CEEN	SRCEN	UDEN	OVEN	FL	CL
		IFS[3]	IFS[2]	IFS[1]	IFS[0]	—	OFS[2]	OFS[1]	OFS[0]
	SRCSTAT_1	OFDN[4]	OFDN[3]	OFDN[2]	OFDN[1]	OFDN[0]	IFDN[3]	IFDN[2]	IFDN[1]
		IFDN[0]	—	CEF	FLF	UDF	OVF	IINT	OINT
	SRCID_2								
	SRCOD_2								
	SRCIDCTRL_2	—	—	—	—	—	—	IED	IEN
		—	—	—	—	—	—	IFTRG[1]	IFTRG[0]
	SRCODCTRL_2	—	—	—	—	—	OCH	OED	OEN
		—	—	—	—	—	—	OFTRG[1]	OFTRG[0]
	SRCCTRL_2	—	—	CEEN	SRCEN	UDEN	OVEN	FL	CL
		IFS[3]	IFS[2]	IFS[1]	IFS[0]	—	OFS[2]	OFS[1]	OFS[0]
	SRCSTAT_2	OFDN[4]	OFDN[3]	OFDN[2]	OFDN[1]	OFDN[0]	IFDN[3]	IFDN[2]	IFDN[1]
		IFDN[0]	—	CEF	FLF	UDF	OVF	IINT	OINT
Sound generator	SGCR1_0	SGST	STPM	—	SGCK[1]	SGCK[0]	DPF[2]	DPF[1]	DPF[0]
	SGCSR_0	SGIE	SGDEF	—	—	—	—	—	—
	SGCR2_0	SGEND	TCHG	—	—	—	—	—	—
	SGLR_0	LD[7]	LD[6]	LD[5]	LD[4]	LD[3]	LD[2]	LD[1]	LD[0]
	SGTFR_0	—	TONE[6]	TONE[5]	TONE[4]	TONE[3]	TONE[2]	TONE[1]	TONE[0]
	SGSFR_0	SFS[7]	SFS[6]	SFS[5]	SFS[4]	SFS[3]	SFS[2]	SFS[1]	SFS[0]
	SGCR1_1	SGST	STPM	—	SGCK[1]	SGCK[0]	DPF[2]	DPF[1]	DPF[0]
	SGCSR_1	SGIE	SGDEF	—	—	—	—	—	—

chanhvinh.com

Module Name	Register Abbreviation	Bit 31/23/15/7	Bit 30/22/14/6	Bit 29/21/13/5	Bit 28/20/12/4	Bit 27/19/11/3	Bit 26/18/10/2	Bit 25/17/9/1	Bit 24/16/8/0
Sound generator	SGCR2_1	SGEND	TCHG	—	—	—	—	—	—
	SGLR_1	LD[7]	LD[6]	LD[5]	LD[4]	LD[3]	LD[2]	LD[1]	LD[0]
	SGTFR_1	—	TONE[6]	TONE[5]	TONE[4]	TONE[3]	TONE[2]	TONE[1]	TONE[0]
	SGSFR_1	SFS[7]	SFS[6]	SFS[5]	SFS[4]	SFS[3]	SFS[2]	SFS[1]	SFS[0]
	SGCR1_2	SGST	STPM	—	SGCK[1]	SGCK[0]	DPF[2]	DPF[1]	DPF[0]
	SGCSR_2	SGIE	SGDEF	—	—	—	—	—	—
	SGCR2_2	SGEND	TCHG	—	—	—	—	—	—
	SGLR_2	LD[7]	LD[6]	LD[5]	LD[4]	LD[3]	LD[2]	LD[1]	LD[0]
	SGTFR_2	—	TONE[6]	TONE[5]	TONE[4]	TONE[3]	TONE[2]	TONE[1]	TONE[0]
	SGSFR_2	SFS[7]	SFS[6]	SFS[5]	SFS[4]	SFS[3]	SFS[2]	SFS[1]	SFS[0]
	SGCR1_3	SGST	STPM	—	SGCK[1]	SGCK[0]	DPF[2]	DPF[1]	DPF[0]
	SGCSR_3	SGIE	SGDEF	—	—	—	—	—	—
	SGCR2_3	SGEND	TCHG	—	—	—	—	—	—
	SGLR_3	LD[7]	LD[6]	LD[5]	LD[4]	LD[3]	LD[2]	LD[1]	LD[0]
	SGTFR_3	—	TONE[6]	TONE[5]	TONE[4]	TONE[3]	TONE[2]	TONE[1]	TONE[0]
	SGSFR_3	SFS[7]	SFS[6]	SFS[5]	SFS[4]	SFS[3]	SFS[2]	SFS[1]	SFS[0]
MMC host interface	CE_CMD_SET	—	—	CMD[5]	CMD[4]	CMD[3]	CMD[2]	CMD[1]	CMD[0]
		RTYP[1]	RTYP[0]	RBSY	—	WDAT	DWEN	CMLTE	CMD12EN
		RIDXC[1]	RIDXC[0]	RCRC7C[1]	RCRC7C[0]	—	CRC16C	—	CRCSTE
		TBIT	OPDM	—	—	SBIT	—	DATW[1]	DATW[0]
	CE_ARG	ARG[31]	ARG[30]	ARG[29]	ARG[28]	ARG[27]	ARG[26]	ARG[25]	ARG[24]
		ARG[23]	ARG[22]	ARG[21]	ARG[20]	ARG[19]	ARG[18]	ARG[17]	ARG[16]
		ARG[15]	ARG[14]	ARG[13]	ARG[12]	ARG[11]	ARG[10]	ARG[9]	ARG[8]
		ARG[7]	ARG[6]	ARG[5]	ARG[4]	ARG[3]	ARG[2]	ARG[1]	ARG[0]
	CE_ARG_ CMD12	C12ARG[31]	C12ARG[30]	C12ARG[29]	C12ARG[28]	C12ARG[27]	C12ARG[26]	C12ARG[25]	C12ARG[24]
		C12ARG[23]	C12ARG[22]	C12ARG[21]	C12ARG[20]	C12ARG[19]	C12ARG[18]	C12ARG[17]	C12ARG[16]
		C12ARG[15]	C12ARG[14]	C12ARG[13]	C12ARG[12]	C12ARG[11]	C12ARG[10]	C12ARG[9]	C12ARG[8]
		C12ARG[7]	C12ARG[6]	C12ARG[5]	C12ARG[4]	C12ARG[3]	C12ARG[2]	C12ARG[1]	C12ARG[0]
	CE_CMD_ CTRL	—	—	—	—	—	—	—	—
		—	—	—	—	—	—	—	—
		—	—	—	—	—	—	—	—
		—	—	—	—	—	—	—	BREAK

chanhvinh.com

Module Name	Register Abbreviation	Bit 31/23/15/7	Bit 30/22/14/6	Bit 29/21/13/5	Bit 28/20/12/4	Bit 27/19/11/3	Bit 26/18/10/2	Bit 25/17/9/1	Bit 24/16/8/0
MMC host interface	CE_BLOCK_SET	BLKCNT[15]	BLKCNT[14]	BLKCNT[13]	BLKCNT[12]	BLKCNT[11]	BLKCNT[10]	BLKCNT[9]	BLKCNT[8]
		BLKCNT[7]	BLKCNT[6]	BLKCNT[5]	BLKCNT[4]	BLKCNT[3]	BLKCNT[2]	BLKCNT[1]	BLKCNT[0]
		BLKSIZ[15]	BLKSIZ[14]	BLKSIZ[13]	BLKSIZ[12]	BLKSIZ[11]	BLKSIZ[10]	BLKSIZ[9]	BLKSIZ[8]
		BLKSIZ[7]	BLKSIZ[6]	BLKSIZ[5]	BLKSIZ[4]	BLKSIZ[3]	BLKSIZ[2]	BLKSIZ[1]	BLKSIZ[0]
	CE_CLK_CTRL	—	—	—	—	—	—	—	CLKEN
		—	—	—	—	CLKDIV[3]	CLKDIV[2]	CLKDIV[1]	CLKDIV[0]
		—	—	SRSPTO[1]	SRSPTO[0]	SRBSYTO[3]	SRBSYTO[2]	SRBSYTO[1]	SRBSYTO[0]
		SRWDTO[3]	SRWDTO[2]	SRWDTO[1]	SRWDTO[0]	—	—	—	—
	CE_BUF_ACC	—	—	—	—	—	—	DMAWEN	DMAREN
		—	—	—	—	—	—	BUSW	ATYP
		—	—	—	—	—	—	—	—
		—	—	—	—	—	—	—	—
	CE_RESP3	RSP[127]	RSP[126]	RSP[125]	RSP[124]	RSP[123]	RSP[122]	RSP[121]	RSP[120]
		RSP[119]	RSP[118]	RSP[117]	RSP[116]	RSP[115]	RSP[114]	RSP[113]	RSP[112]
		RSP[111]	RSP[110]	RSP[109]	RSP[108]	RSP[107]	RSP[106]	RSP[105]	RSP[104]
		RSP[103]	RSP[102]	RSP[101]	RSP[100]	RSP[99]	RSP[98]	RSP[97]	RSP[96]
	CE_RESP2	RSP[95]	RSP[94]	RSP[93]	RSP[92]	RSP[91]	RSP[90]	RSP[89]	RSP[88]
		RSP[87]	RSP[86]	RSP[85]	RSP[84]	RSP[83]	RSP[82]	RSP[81]	RSP[80]
		RSP[79]	RSP[78]	RSP[77]	RSP[76]	RSP[75]	RSP[74]	RSP[73]	RSP[72]
		RSP[71]	RSP[70]	RSP[69]	RSP[68]	RSP[67]	RSP[66]	RSP[65]	RSP[64]
	CE_RESP1	RSP[63]	RSP[62]	RSP[61]	RSP[60]	RSP[59]	RSP[58]	RSP[57]	RSP[56]
		RSP[55]	RSP[54]	RSP[53]	RSP[52]	RSP[51]	RSP[50]	RSP[49]	RSP[48]
		RSP[47]	RSP[46]	RSP[45]	RSP[44]	RSP[43]	RSP[42]	RSP[41]	RSP[40]
		RSP[39]	RSP[38]	RSP[37]	RSP[36]	RSP[35]	RSP[34]	RSP[33]	RSP[32]
	CE_RESP0	RSP[31]	RSP[30]	RSP[29]	RSP[28]	RSP[27]	RSP[26]	RSP[25]	RSP[24]
		RSP[23]	RSP[22]	RSP[21]	RSP[20]	RSP[19]	RSP[18]	RSP[17]	RSP[16]
		RSP[15]	RSP[14]	RSP[13]	RSP[12]	RSP[11]	RSP[10]	RSP[9]	RSP[8]
		RSP[7]	RSP[6]	RSP[5]	RSP[4]	RSP[3]	RSP[2]	RSP[1]	RSP[0]
	CE_RESP_CMD12	RSP12[31]	RSP12[30]	RSP12[29]	RSP12[28]	RSP12[27]	RSP12[26]	RSP12[25]	RSP12[24]
		RSP12[23]	RSP12[22]	RSP12[21]	RSP12[20]	RSP12[19]	RSP12[18]	RSP12[17]	RSP12[16]
		RSP12[15]	RSP12[14]	RSP12[13]	RSP12[12]	RSP12[11]	RSP12[10]	RSP12[9]	RSP12[8]
		RSP12[7]	RSP12[6]	RSP12[5]	RSP12[4]	RSP12[3]	RSP12[2]	RSP12[1]	RSP12[0]

chanhvinh.com

Module Name	Register Abbreviation	Bit 31/23/15/7	Bit 30/22/14/6	Bit 29/21/13/5	Bit 28/20/12/4	Bit 27/19/11/3	Bit 26/18/10/2	Bit 25/17/9/1	Bit 24/16/8/0
MMC host interface	CE_DATA	DATA[31]	DATA[30]	DATA[29]	DATA[28]	DATA[27]	DATA[26]	DATA[25]	DATA[24]
		DATA[23]	DATA[22]	DATA[21]	DATA[20]	DATA[19]	DATA[18]	DATA[17]	DATA[16]
		DATA[15]	DATA[14]	DATA[13]	DATA[12]	DATA[11]	DATA[10]	DATA[9]	DATA[8]
		DATA[7]	DATA[6]	DATA[5]	DATA[4]	DATA[3]	DATA[2]	DATA[1]	DATA[0]
	CE_INT	—	—	—	—	—	CMD12DRE	CMD12RBE	CMD12CRE
		DTRANE	BUFRE	BUFWEN	BUFREN	—	—	RBSYE	CRSPE
		CMDVIO	BUFVIO	—	—	WDATERR	RDATERR	RIDXERR	RSPERR
		—	—	—	CRCSTO	WDATTO	RDATTO	RBSYTO	RSPTO
	CE_INT_EN	—	—	—	—	—	MCMD12DRE	MCMD12RBE	MCMD12CRE
		MDTRANE	MBUFRE	MBUFWEN	MBUFREN	—	—	MRBSYE	MCRSPE
		MCMDVIO	MBUFVIO	—	—	MWDATERR	MRDATERR	MRIDXERR	MRSPERR
		—	—	—	MCRCSTO	MWDATTO	MRDATTO	MRBSYTO	MRSPTO
	CE_HOST_STS1	CMDSEQ	CMDSIG	RSPIDX[5]	RSPIDX[4]	RSPIDX[3]	RSPIDX[2]	RSPIDX[1]	RSPIDX[0]
		DATSIG[7]	DATSIG[6]	DATSIG[5]	DATSIG[4]	DATSIG[3]	DATSIG[2]	DATSIG[1]	DATSIG[0]
		RCVBLK[15]	RCVBLK[14]	RCVBLK[13]	RCVBLK[12]	RCVBLK[11]	RCVBLK[10]	RCVBLK[9]	RCVBLK[8]
		RCVBLK[7]	RCVBLK[6]	RCVBLK[5]	RCVBLK[4]	RCVBLK[3]	RCVBLK[2]	RCVBLK[1]	RCVBLK[0]
	CE_HOST_STS2	CRCSTE	CRC16E	AC12CRCE	RSPCRC7E	CRCSTEBE	RDATEBE	AC12REBE	RSPEBE
		AC12IDXE	RSPIDXE	—	—	—	CRCST[2]	CRCST[1]	CRCST[0]
		—	STRDATTO	DATBSYTO	CRCSTTO	AC12BSYTO	RSPBSYTO	AC12RSPTO	STRSPTO
		—	—	—	—	—	—	—	—
	CE_DMA_MODE	—	—	—	—	—	—	—	—
		—	—	—	—	—	—	—	—
		—	—	—	—	—	—	—	—
		—	—	—	—	—	—	—	DMASEL
	CE_DETECT	—	—	—	—	—	—	—	—
		—	—	—	—	—	—	—	—
		—	CDSIG	CDRISE	CDFALL	—	—	—	—
		—	—	MCDRISE	MCDFALL	—	—	—	—
	CE_ADD_MODE	—	—	—	—	—	—	—	—
		—	—	—	—	CLKMAIN	—	—	—
		—	—	—	—	—	—	—	—
		—	—	—	—	—	—	—	—

chanhvinh.com

Module Name	Register Abbreviation	Bit 31/23/15/7	Bit 30/22/14/6	Bit 29/21/13/5	Bit 28/20/12/4	Bit 27/19/11/3	Bit 26/18/10/2	Bit 25/17/9/1	Bit 24/16/8/0
MMC host interface	CE_VERSION	SWRST	—	—	—	—	—	—	—
		—	—	—	—	—	—	—	—
		VERSION[15]	VERSION[14]	VERSION[13]	VERSION[12]	VERSION[11]	VERSION[10]	VERSION[9]	VERSION[8]
		VERSION[7]	VERSION[6]	VERSION[5]	VERSION[4]	VERSION[3]	VERSION[2]	VERSION[1]	VERSION[0]
Motor control PWM timer	PWCR_1	—	—	IE	CMF	CST	CKS2	CKS1	CKS0
	PWPR_1	OPS1H	OPS1G	OPS1F	OPS1E	OPS1D	OPS1C	OPS1B	OPS1A
	PWCYR_1	PWCY15	PWCY14	PWCY13	PWCY12	PWCY11	PWCY10	PWCY9	PWCY8
		PWCY7	PWCY6	PWCY5	PWCY4	PWCY3	PWCY2	PWCY1	PWCY0
	PWBFR_1A	—	—	—	OTS	—	—	DT9	DT8
		DT7	DT6	DT5	DT4	DT3	DT2	DT1	DT0
	PWBFR_1C	—	—	—	OTS	—	—	DT9	DT8
		DT7	DT6	DT5	DT4	DT3	DT2	DT1	DT0
	PWBFR_1E	—	—	—	OTS	—	—	DT9	DT8
		DT7	DT6	DT5	DT4	DT3	DT2	DT1	DT0
	PWBFR_1G	—	—	—	OTS	—	—	DT9	DT8
		DT7	DT6	DT5	DT4	DT3	DT2	DT1	DT0
	PWCR_2	—	—	IE	CMF	CST	CKS2	CKS1	CKS0
	PWPR_2	OPS2H	OPS2G	OPS2F	OPS2E	OPS2D	OPS2C	OPS2B	OPS2A
	PWCYR_2	PWCY15	PWCY14	PWCY13	PWCY12	PWCY11	PWCY10	PWCY9	PWCY8
		PWCY7	PWCY6	PWCY5	PWCY4	PWCY3	PWCY2	PWCY1	PWCY0
	PWBFR_2A	—	—	—	OTS	—	—	DT9	DT8
		DT7	DT6	DT5	DT4	DT3	DT2	DT1	DT0
	PWBFR_2C	—	—	—	OTS	—	—	DT9	DT8
		DT7	DT6	DT5	DT4	DT3	DT2	DT1	DT0
	PWBFR_2E	—	—	—	OTS	—	—	DT9	DT8
		DT7	DT6	DT5	DT4	DT3	DT2	DT1	DT0
	PWBFR_2G	—	—	—	OTS	—	—	DT9	DT8
		DT7	DT6	DT5	DT4	DT3	DT2	DT1	DT0
	PWBTCR	BTC2G	BTC2E	BTC2C	BTC2A	BTC1G	BTC1E	BTC1C	BTC1A
		—	—	—	—	—	—	—	—

chanhvinh.com

Module Name	Register Abbreviation	Bit 31/23/15/7	Bit 30/22/14/6	Bit 29/21/13/5	Bit 28/20/12/4	Bit 27/19/11/3	Bit 26/18/10/2	Bit 25/17/9/1	Bit 24/16/8/0
General purpose I/O ports	PAIOR0	—	—	—	—	—	—	—	PA1IOR
		—	—	—	—	—	—	—	PA0IOR
	PADR0	—	—	—	—	—	—	—	PA1DR
		—	—	—	—	—	—	—	PA0DR
	PAPR0	—	—	—	—	—	—	—	—
		—	—	—	—	—	—	PA1PR	PA0PR
	PBCR5	—	—	—	—	—	PB22MD2	PB22MD1	PB22MD0
		—	—	PB21MD1	PB21MD0	—	PB20MD2	PB20MD1	PB20MD0
	PBCR4	—	PB19MD2	PB19MD1	PB19MD0	—	PB18MD2	PB18MD1	PB18MD0
		—	PB17MD2	PB17MD1	PB17MD0	—	PB16MD2	PB16MD1	PB16MD0
	PBCR3	—	PB15MD2	PB15MD1	PB15MD0	—	PB14MD2	PB14MD1	PB14MD0
		—	PB13MD2	PB13MD1	PB13MD0	—	—	PB12MD1	PB12MD0
	PBCR2	—	—	PB11MD1	PB11MD0	—	—	PB10MD1	PB10MD0
		—	—	PB9MD1	PB9MD0	—	—	PB8MD1	PB8MD0
	PBCR1	—	—	PB7MD1	PB7MD0	—	—	PB6MD1	PB6MD0
		—	—	PB5MD1	PB5MD0	—	—	PB4MD1	PB4MD0
	PBCR0	—	—	PB3MD1	PB3MD0	—	—	PB2MD1	PB2MD0
		—	—	PB1MD1	PB1MD0	—	—	—	—
	PBIOR1	—	—	—	—	—	—	—	—
		—	PB22IOR	PB21IOR	PB20IOR	PB19IOR	PB18IOR	PB17IOR	PB16IOR
	PBIOR0	PB15IOR	PB14IOR	PB13IOR	PB12IOR	PB11IOR	PB10IOR	PB9IOR	PB8IOR
		PB7IOR	PB6IOR	PB5IOR	PB4IOR	PB3IOR	PB2IOR	PB1IOR	—
	PBDR1	—	—	—	—	—	—	—	—
		—	PB22DR	PB21DR	PB20DR	PB19DR	PB18DR	PB17DR	PB16DR
	PBDR0	PB15DR	PB14DR	PB13DR	PB12DR	PB11DR	PB10DR	PB9DR	PB8DR
		PB7DR	PB6DR	PB5DR	PB4DR	PB3DR	PB2DR	PB1DR	—
	PBPR1	—	—	—	—	—	—	—	—
		—	PB22PR	PB21PR	PB20PR	PB19PR	PB18PR	PB17PR	PB16PR
	PBPR0	PB15PR	PB14PR	PB13PR	PB12PR	PB11PR	PB10PR	PB9PR	PB8PR
		PB7PR	PB6PR	PB5PR	PB4PR	PB3PR	PB2PR	PB1PR	—

chanhvinh.com

Module Name	Register Abbreviation	Bit 31/23/15/7	Bit 30/22/14/6	Bit 29/21/13/5	Bit 28/20/12/4	Bit 27/19/11/3	Bit 26/18/10/2	Bit 25/17/9/1	Bit 24/16/8/0
General purpose I/O ports	PCCR2	—	—	—	—	—	—	—	—
		—	—	—	—	—	PC8MD2	PC8MD1	PC8MD0
	PCCR1	—	PC7MD2	PC7MD1	PC7MD0	—	PC6MD2	PC6MD1	PC6MD0
		—	PC5MD2	PC5MD1	PC5MD0	—	—	PC4MD1	PC4MD0
	PCCR0	—	—	PC3MD1	PC3MD0	—	—	PC2MD1	PC2MD0
		—	—	—	PC1MD0	—	—	—	PC0MD0
	PCIOR0	—	—	—	—	—	—	—	PC8IOR
		PC7IOR	PC6IOR	PC5IOR	PC4IOR	PC3IOR	PC2IOR	PC1IOR	PC0IOR
	PCDR0	—	—	—	—	—	—	—	PC8DR
		PC7DR	PC6DR	PC5DR	PC4DR	PC3DR	PC2DR	PC1DR	PC0DR
	PCPR0	—	—	—	—	—	—	—	PC8PR
		PC7PR	PC6PR	PC5PR	PC4PR	PC3PR	PC2PR	PC1PR	PC0PR
	PDCR3	—	—	PD15MD1	PD15MD0	—	—	PD14MD1	PD14MD0
		—	—	PD13MD1	PD13MD0	—	—	PD12MD1	PD12MD0
	PDCR2	—	—	PD11MD1	PD11MD0	—	—	PD10MD1	PD10MD0
		—	—	PD9MD1	PD9MD0	—	—	PD8MD1	PD8MD0
	PDCR1	—	—	PD7MD1	PD7MD0	—	—	PD6MD1	PD6MD0
		—	—	PD5MD1	PD5MD0	—	—	PD4MD1	PD4MD0
	PDCR0	—	—	PD3MD1	PD3MD0	—	—	PD2MD1	PD2MD0
		—	—	PD1MD1	PD1MD0	—	—	PD0MD1	PD0MD0
	PDIOR0	PD15IOR	PD14IOR	PD13IOR	PD12IOR	PD11IOR	PD10IOR	PD9IOR	PD8IOR
		PD7IOR	PD6IOR	PD5IOR	PD4IOR	PD3IOR	PD2IOR	PD1IOR	PD0IOR
	PDDR0	PD15DR	PD14DR	PD13DR	PD12DR	PD11DR	PD10DR	PD9DR	PD8DR
		PD7DR	PD6DR	PD5DR	PD4DR	PD3DR	PD2DR	PD1DR	PD0DR
	PDPR0	PD15PR	PD14PR	PD13PR	PD12PR	PD11PR	PD10PR	PD9PR	PD8PR
		PD7PR	PD6PR	PD5PR	PD4PR	PD3PR	PD2PR	PD1PR	PD0PR
	PECR1	—	—	PE7MD1	PE7MD0	—	—	PE6MD1	PE6MD0
		—	—	PE5MD1	PE5MD0	—	—	PE4MD1	PE4MD0
	PECR0	—	PE3MD2	PE3MD1	PE3MD0	—	PE2MD2	PE2MD1	PE2MD0
		—	PE1MD2	PE1MD1	PE1MD0	—	—	PE0MD1	PE0MD0
	PEIOR0	—	—	—	—	—	—	—	—
		PE7IOR	PE6IOR	PE5IOR	PE4IOR	PE3IOR	PE2IOR	PE1IOR	PE0IOR

chanhvinh.com

Module Name	Register Abbreviation	Bit 31/23/15/7	Bit 30/22/14/6	Bit 29/21/13/5	Bit 28/20/12/4	Bit 27/19/11/3	Bit 26/18/10/2	Bit 25/17/9/1	Bit 24/16/8/0
General purpose I/O ports	PEDR0	—	—	—	—	—	—	—	—
		PE7DR	PE6DR	PE5DR	PE4DR	PE3DR	PE2DR	PE1DR	PE0DR
	PEPR0	—	—	—	—	—	—	—	—
		PE7PR	PE6PR	PE5PR	PE4PR	PE3PR	PE2PR	PE1PR	PE0PR
	PFCR6	—	PF23MD2	PF23MD1	PF23MD0	—	PF22MD2	PF22MD1	PF22MD0
		—	PF21MD2	PF21MD1	PF21MD0	—	PF20MD2	PF20MD1	PF20MD0
	PFCR5	—	PF19MD2	PF19MD1	PF19MD0	—	PF18MD2	PF18MD1	PF18MD0
		—	PF17MD2	PF17MD1	PF17MD0	—	PF16MD2	PF16MD1	PF16MD0
	PFCR4	—	—	—	—	—	—	—	—
		—	—	—	—	—	PF15MD2	PF15MD1	PF15MD0
	PFCR3	—	—	—	—	—	PF14MD2	PF14MD1	PF14MD0
		—	PF13MD2	PF13MD1	PF13MD0	—	PF12MD2	PF12MD1	PF12MD0
	PFCR2	—	PF11MD2	PF11MD1	PF11MD0	—	PF10MD2	PF10MD1	PF10MD0
		—	PF9MD2	PF9MD1	PF9MD0	—	PF8MD2	PF8MD1	PF8MD0
	PFCR1	—	PF7MD2	PF7MD1	PF7MD0	—	PF6MD2	PF6MD1	PF6MD0
		—	PF5MD2	PF5MD1	PF5MD0	—	PF4MD2	PF4MD1	PF4MD0
	PFCR0	—	PF3MD2	PF3MD1	PF3MD0	—	PF2MD2	PF2MD1	PF2MD0
		—	PF1MD2	PF1MD1	PF1MD0	—	PF0MD2	PF0MD1	PF0MD0
	PFIOR1	—	—	—	—	—	—	—	—
		PF23IOR	PF22IOR	PF21IOR	PF20IOR	PF19IOR	PF18IOR	PF17IOR	PF16IOR
	PFIOR0	PF15IOR	PF14IOR	PF13IOR	PF12IOR	PF11IOR	PF10IOR	PF9IOR	PF8IOR
		PF7IOR	PF6IOR	PF5IOR	PF4IOR	PF3IOR	PF2IOR	PF1IOR	PF0IOR
	PFDR1	—	—	—	—	—	—	—	—
		PF23DR	PF22DR	PF21DR	PF20DR	PF19DR	PF18DR	PF17DR	PF16DR
	PFDR0	PF15DR	PF14DR	PF13DR	PF12DR	PF11DR	PF10DR	PF9DR	PF8DR
		PF7DR	PF6DR	PF5DR	PF4DR	PF3DR	PF2DR	PF1DR	PF0DR
	PFPR1	—	—	—	—	—	—	—	—
		PF23PR	PF22PR	PF21PR	PF20PR	PF19PR	PF18PR	PF17PR	PF16PR
	PFPR0	PF15PR	PF14PR	PF13PR	PF12PR	PF11PR	PF10PR	PF9PR	PF8PR
		PF7PR	PF6PR	PF5PR	PF4PR	PF3PR	PF2PR	PF1PR	PF0PR
	PGCR6	—	—	PG27MD1	PG27MD0	—	—	PG26MD1	PG26MD0
		—	—	PG25MD1	PG25MD0	—	—	PG24MD1	PG24MD0

chanhvinh.com

Module Name	Register Abbreviation	Bit 31/23/15/7	Bit 30/22/14/6	Bit 29/21/13/5	Bit 28/20/12/4	Bit 27/19/11/3	Bit 26/18/10/2	Bit 25/17/9/1	Bit 24/16/8/0
General purpose I/O ports	PGCR5	—	PG23MD2	PG23MD1	PG23MD0	—	PG22MD2	PG22MD1	PG22MD0
		—	PG21MD2	PG21MD1	PG21MD0	—	PG20MD2	PG20MD1	PG20MD0
	PGCR4	—	PG19MD2	PG19MD1	PG19MD0	—	PG18MD2	PG18MD1	PG18MD0
		—	—	PG17MD1	PG17MD0	—	—	PG16MD1	PG16MD0
	PGCR3	—	—	PG15MD1	PG15MD0	—	—	PG14MD1	PG14MD0
		—	—	PG13MD1	PG13MD0	—	—	PG12MD1	PG12MD0
	PGCR2	—	PG11MD2	PG11MD1	PG11MD0	—	PG10MD2	PG10MD1	PG10MD0
		—	PG9MD2	PG9MD1	PG9MD0	—	PG8MD2	PG8MD1	PG8MD0
	PGCR1	—	PG7MD2	PG7MD1	PG7MD0	—	PG6MD2	PG6MD1	PG6MD0
		—	PG5MD2	PG5MD1	PG5MD0	—	PG4MD2	PG4MD1	PG4MD0
	PGCR0	—	PG3MD2	PG3MD1	PG3MD0	—	PG2MD2	PG2MD1	PG2MD0
		—	PG1MD2	PG1MD1	PG1MD0	—	PG0MD2	PG0MD1	PG0MD0
	PGIOR1	—	—	—	—	PG27IOR	PG26IOR	PG25IOR	PG24IOR
		PG23IOR	PG22IOR	PG21IOR	PG20IOR	PG19IOR	PG18IOR	PG17IOR	PG16IOR
	PGIOR0	PG15IOR	PG14IOR	PG13IOR	PG12IOR	PG11IOR	PG10IOR	PG9IOR	PG8IOR
		PG7IOR	PG6IOR	PG5IOR	PG4IOR	PG3IOR	PG2IOR	PG1IOR	PG0IOR
	PGDR1	—	—	—	—	PG27DR	PG26DR	PG25DR	PG24DR
		PG23DR	PG22DR	PG21DR	PG20DR	PG19DR	PG18DR	PG17DR	PG16DR
	PGDR0	PG15DR	PG14DR	PG13DR	PG12DR	PG11DR	PG10DR	PG9DR	PG8DR
		PG7DR	PG6DR	PG5DR	PG4DR	PG3DR	PG2DR	PG1DR	PG0DR
	PGPR1	—	—	—	—	PG27PR	PG26PR	PG25PR	PG24PR
		PG23PR	PG22PR	PG21PR	PG20PR	PG19PR	PG18PR	PG17PR	PG16PR
	PGPR0	PG15PR	PG14PR	PG13PR	PG12PR	PG11PR	PG10PR	PG9PR	PG8PR
		PG7PR	PG6PR	PG5PR	PG4PR	PG3PR	PG2PR	PG1PR	PG0PR
	PHCR1	—	—	PH7MD1	PH7MD0	—	—	PH6MD1	PH6MD0
		—	—	PH5MD1	PH5MD0	—	—	PH4MD1	PH4MD0
	PHCR0	—	—	PH3MD1	PH3MD0	—	—	PH2MD1	PH2MD0
		—	—	PH1MD1	PH1MD0	—	—	PH0MD1	PH0MD0
	PHPR0	—	—	—	—	—	—	—	—
		PH7PR	PH6PR	PH5PR	PH4PR	PH3PR	PH2PR	PH1PR	PH0PR
	PJCR7	—	—	—	PJ31MD	—	PJ30MD2	PJ30MD1	PJ30MD0
		—	PJ29MD2	PJ29MD1	PJ29MD0	—	PJ28MD2	PJ28MD1	PJ28MD0

chanhvinh.com

Module Name	Register Abbreviation	Bit 31/23/15/7	Bit 30/22/14/6	Bit 29/21/13/5	Bit 28/20/12/4	Bit 27/19/11/3	Bit 26/18/10/2	Bit 25/17/9/1	Bit 24/16/8/0
General purpose I/O ports	PJCR6	—	PJ27MD2	PJ27MD1	PJ27MD0	—	PJ26MD2	PJ26MD1	PJ26MD0
		—	PJ25MD2	PJ25MD1	PJ25MD0	—	PJ24MD2	PJ24MD1	PJ24MD0
	PJCR5	—	PJ23MD2	PJ23MD1	PJ23MD0	—	PJ22MD2	PJ22MD1	PJ22MD0
		—	PJ21MD2	PJ21MD1	PJ21MD0	—	PJ20MD2	PJ20MD1	PJ20MD0
	PJCR4	—	PJ19MD2	PJ19MD1	PJ19MD0	—	PJ18MD2	PJ18MD1	PJ18MD0
		—	PJ17MD2	PJ17MD1	PJ17MD0	—	PJ16MD2	PJ16MD1	PJ16MD0
	PJCR3	—	PJ15MD2	PJ15MD1	PJ15MD0	—	PJ14MD2	PJ14MD1	PJ14MD0
		—	PJ13MD2	PJ13MD1	PJ13MD0	—	PJ12MD2	PJ12MD1	PJ12MD0
	PJCR2	—	PJ11MD2	PJ11MD1	PJ11MD0	—	PJ10MD2	PJ10MD1	PJ10MD0
		—	PJ9MD2	PJ9MD1	PJ9MD0	—	PJ8MD2	PJ8MD1	PJ8MD0
	PJCR1	—	PJ7MD2	PJ7MD1	PJ7MD0	—	PJ6MD2	PJ6MD1	PJ6MD0
		—	PJ5MD2	PJ5MD1	PJ5MD0	—	PJ4MD2	PJ4MD1	PJ4MD0
	PJCR0	—	PJ3MD2	PJ3MD1	PJ3MD0	—	PJ2MD2	PJ2MD1	PJ2MD0
		—	PJ1MD2	PJ1MD1	PJ1MD0	—	PJ0MD2	PJ0MD1	PJ0MD0
	PJIOR1	PJ31IOR	PJ30IOR	PJ29IOR	PJ28IOR	PJ27IOR	PJ26IOR	PJ25IOR	PJ24IOR
		PJ23IOR	PJ22IOR	PJ21IOR	PJ20IOR	PJ19IOR	PJ18IOR	PJ17IOR	PJ16IOR
	PJIOR0	PJ15IOR	PJ14IOR	PJ13IOR	PJ12IOR	PJ11IOR	PJ10IOR	PJ9IOR	PJ8IOR
		PJ7IOR	PJ6IOR	PJ5IOR	PJ4IOR	PJ3IOR	PJ2IOR	PJ1IOR	PJ0IOR
	PJDR1	PJ31DR	PJ30DR	PJ29DR	PJ28DR	PJ27DR	PJ26DR	PJ25DR	PJ24DR
		PJ23DR	PJ22DR	PJ21DR	PJ20DR	PJ19DR	PJ18DR	PJ17DR	PJ16DR
	PJDR0	PJ15DR	PJ14DR	PJ13DR	PJ12DR	PJ11DR	PJ10DR	PJ9DR	PJ8DR
		PJ7DR	PJ6DR	PJ5DR	PJ4DR	PJ3DR	PJ2DR	PJ1DR	PJ0DR
	PJPR1	PJ31PR	PJ30PR	PJ29PR	PJ28PR	PJ27PR	PJ26PR	PJ25PR	PJ24PR
		PJ23PR	PJ22PR	PJ21PR	PJ20PR	PJ19PR	PJ18PR	PJ17PR	PJ16PR
	PJPR0	PJ15PR	PJ14PR	PJ13PR	PJ12PR	PJ11PR	PJ10PR	PJ9PR	PJ8PR
		PJ7PR	PJ6PR	PJ5PR	PJ4PR	PJ3PR	PJ2PR	PJ1PR	PJ0PR
	SNCR	—	—	—	—	—	—	—	—
		—	—	SSI5NCE	SSI4NCE	SSI3NCE	SSI2NCE	SSI1NCE	SSI0NCE
Power-down modes	STBCR1	STBY	DEEP	—	—	—	—	—	—
	STBCR2	MSTP10	—	MSTP8	MSTP7	—	—	—	—
	STBCR3	HIZ	MSTP36	MSTP35	—	—	MSTP32	—	MSTP30
	STBCR4	MSTP47	MSTP46	MSTP45	MSTP44	MSTP43	MSTP42	MSTP41	MSTP40

chanhvinh.com

Module Name	Register Abbreviation	Bit 31/23/15/7	Bit 30/22/14/6	Bit 29/21/13/5	Bit 28/20/12/4	Bit 27/19/11/3	Bit 26/18/10/2	Bit 25/17/9/1	Bit 24/16/8/0
Power-down modes	STBCR5	MSTP57	MSTP56	MSTP55	MSTP54	MSTP53	MSTP52	MSTP51	MSTP50
	STBCR6	MSTP67	MSTP66	MSTP65	MSTP64	MSTP63	MSTP62	MSTP61	MSTP60
	STBCR7	MSTP77	MSTP76	MSTP75	—	MSTP73	MSTP72	—	MSTP70
	STBCR8	MSTP87	MSTP86	MSTP85	MSTP84	—	MSTP82	MSTP81	—
	STBCR9	MSTP97	MSTP96	MSTP95	MSTP94	MSTP93	MSTP92	MSTP91	MSTP90
	STBCR10	MSTP107	MSTP106	MSTP105	—	MSTP103	MSTP102	MSTP101	MSTP100
	SWRSTCR1	AXTALE	SSIF5SRST	SSIF4SRST	IEBSRST	SSIF3SRST	SSIF2SRST	SSIF1SRST	SSIF0SRST
	SWRSTCR2	—	—	—	JCUSRST	RGPVGSRST	—	—	VDC4SRST
	SYSCR1	—	—	—	—	RAME3	RAME2	RAME1	RAME0
	SYSCR2	—	—	—	—	RAMWE3	RAMWE2	RAMWE1	RAMWE0
	SYSCR3	—	—	VRAME5	VRAME4	VRAME3	VRAME2	VRAME1	VRAME0
	SYSCR4	—	—	VRAMWE5	VRAMWE4	VRAMWE3	VRAMWE2	VRAMWE1	VRAMWE0
	SYSCR5	—	—	—	—	RRAMWE3	RRAMWE2	RRAMWE1	RRAMWE0
	RRAMKP	—	—	—	—	RRAMKP3	RRAMKP2	RRAMKP1	RRAMKP0
	DSCTR	EBUSKEEPE	RAMBOOT	—	—	—	—	—	—
	DSSSR	—	PJ23	PJ22	PJ21	PJ20	PG3	PG2	NMI
		—	RTCAR	PF19	PF18	PF17	PF16	PC7	PC5
	DSESR	—	PJ23E	PJ22E	PJ21E	PJ20E	PG3E	PG2E	NMIE
		—	—	PF19E	PF18E	PF17E	PF16E	PC7E	PC5E
	DSFR	IOKEEP	PJ23F	PJ22F	PJ21F	PJ20F	PG3F	PG2F	NMIF
		—	RTCARF	PF19F	PF18F	PF17F	PF16F	PC7F	PC5F
	XTALCTR	—	—	—	—	—	—	—	GAIN
User debugging interface	SDIR	T1[7]	T1[6]	T1[5]	T1[4]	T1[3]	T1[2]	T1[1]	T1[0]
		—	—	—	—	—	—	—	—

Notes: 1. When MCR15=0
2. When MCR15=1
3. In command access mode
4. In sector access mode

chanhvinh.com

51.3 Register States in Each Operating Mode

Module Name	Register Abbreviation	Power-On Reset	Manual Reset	Deep Standby	Software Standby	Module Standby	Sleep
Clock pulse generator	FRQCR	Initialized*1	Retained	Initialized	Retained	—	Retained
Interrupt controller	IBNR	Initialized	Retained*2	Initialized	Retained	—	Retained
	Other than above	Initialized	Retained	Initialized	Retained	—	Retained
User break controller	All registers	Initialized	Retained	Initialized	Retained	Retained	Retained
Cache	All registers	Initialized	Retained	Initialized	Retained	—	Retained
Bus state controller	RTCSR	Initialized	Retained*3	Initialized	Retained	—	Retained*3
	RTCNT	Initialized	Retained*4	Initialized	Retained	—	Retained*4
	Other than above	Initialized	Retained	Initialized	Retained	—	Retained
Direct memory access controller	All registers	Initialized	Retained	Initialized	Retained	Retained	Retained*7
Multi-function timer pulse unit 2	All registers	Initialized	Retained	Initialized	Initialized	Initialized	Retained
Compare match timer	All registers	Initialized	Retained	Initialized	Initialized	Retained	Retained
Watchdog timer	WRCSR	Initialized*1	Retained	Initialized	Retained	—	Retained
	Other than above	Initialized	Initialized	Initialized	Retained	—	Retained
Realtime clock	R64CNT	Retained*4	Retained*4	Retained*4	Retained*4	Retained	Retained*4
	RSECCNT	Retained*4	Retained*4	Retained*4	Retained*4	Retained	Retained*4
	RMINCNT	Retained*4	Retained*4	Retained*4	Retained*4	Retained	Retained*4
	RHRCNT	Retained*4	Retained*4	Retained*4	Retained*4	Retained	Retained*4
	RWKCNT	Retained*4	Retained*4	Retained*4	Retained*4	Retained	Retained*4
	RDAYCNT	Retained*4	Retained*4	Retained*4	Retained*4	Retained	Retained*4
	RMONCNT	Retained*4	Retained*4	Retained*4	Retained*4	Retained	Retained*4
	RYRCNT	Retained*4	Retained*4	Retained*4	Retained*4	Retained	Retained*4
	RSECAR	Retained	Retained	Retained	Retained	Retained	Retained
	RMINAR	Retained	Retained	Retained	Retained	Retained	Retained
	RHRAR	Retained	Retained	Retained	Retained	Retained	Retained
	RWKAR	Retained	Retained	Retained	Retained	Retained	Retained

chanhvinh.com

Module Name	Register Abbreviation	Power-On Reset	Manual Reset	Deep Standby	Software Standby	Module Standby	Sleep
Realtime clock	RDAYAR	Retained	Retained	Retained	Retained	Retained	Retained
	RMONAR	Retained	Retained	Retained	Retained	Retained	Retained
	RYRAR	Retained	Retained	Retained	Retained	Retained	Retained
	RCR1	Initialized	Initialized	Initialized	Retained	Retained	Retained
	RCR2	Initialized	Initialized*5	Initialized	Retained	Retained	Retained
	RCR3	Initialized	Retained	Initialized	Retained	Retained	Retained
	RCR5	Retained	Retained	Retained	Retained	Retained	Retained
	RFRH	Retained	Retained	Retained	Retained	Retained	Retained
	RFRL	Retained	Retained	Retained	Retained	Retained	Retained
Serial communication interface with FIFO	All registers	Initialized	Retained	Initialized	Retained	Retained	Retained
Renesas serial peripheral interface	All registers	Initialized	Retained	Initialized	Retained	Retained	Retained
Renesas quad serial peripheral interface	All registers	Initialized	Retained	Initialized	Retained	Retained	Retained
SPI multi I/O bus controller	All registers	Initialized	Retained	Initialized	Retained	Retained	Retained
I^2C bus interface 3	ICMR_0, 1, 2, 3	Initialized	Retained	Initialized	Retained*6	Retained*6	Retained
	Other than above	Initialized	Retained	Initialized	Retained	Retained	Retained
Serial sound interface	All registers	Initialized	Retained	Initialized	Retained	Retained	Retained
Serial I/O with FIFO	All registers	Initialized	Retained	Initialized	Retained	Retained	Retained
Controller area network	All registers	Initialized	Retained	Initialized	Retained	Retained	Retained
IEBus™ controller	All registers	Initialized	Retained	Initialized	Retained	Retained	Retained
Renesas SPDIF interface	All registers	Initialized	Retained	Initialized	Retained	Retained	Retained
CD-ROM decoder	All registers	Initialized	Retained	Initialized	Retained	Retained	Retained
A/D converter	All registers	Initialized	Retained	Initialized	Initialized	Initialized	Retained

chanhvinh.com

Module Name	Register Abbreviation	Power-On Reset	Manual Reset	Deep Standby	Software Standby	Module Standby	Sleep
NAND flash memory controller	All registers	Initialized	Retained	Initialized	Retained	Retained	Retained
USB 2.0 host/function module	All registers	Initialized	Retained	Initialized	Retained	Retained	Retained
Digital video decoder	All registers	Initialized	Retained	Initialized	Retained	Retained	Retained
Video display controller 4	All registers	Initialized	Retained	Initialized	Retained	Retained	Retained
Image renderer	All registers	Initialized	Retained	Initialized	Retained	Retained	Retained
Display out comparison unit	All registers	Initialized	Retained	Initialized	Retained	Retained	Retained
JPEG codec unit	All registers	Initialized	Retained	Initialized	Retained	Retained	Retained
Sampling rate converter	All registers	Initialized	Retained	Initialized	Retained	Retained	Retained
Sound generator	All registers	Initialized	Retained	Initialized	Retained	Retained	Retained
MMC host interface	All registers	Initialized	Retained	Initialized	Retained	Retained	Retained
Motor control PWM timer	All registers	Initialized	Retained	Initialized	Retained	Retained	Retained
General purpose I/O ports	All registers	Initialized	Retained	Initialized	Retained	—	Retained
Power-down modes	DSFR	Initialized	Retained	Retained	Retained	—	Retained
	XTALCTR	Initialized*10	Retained	Retained*9	Retained*9	—	Retained
	Other than above	Initialized	Retained	Initialized	Retained	—	Retained
User debugging interface*8	SDIR	Retained	Retained	Initialized	Retained	Retained	Retained

Notes: 1. Retains the previous value after an internal power-on reset by means of the watchdog timer.
2. The BN3 to BN0 bits are initialized.
3. Flag handling continues.
4. Counting up continues.
5. Bits RTCEN and START are retained.
6. Bits BC2 to BC0 are initialized.
7. Transfer operations can be continued.
8. Initialized by $\overline{\text{TRST}}$ assertion or in the Test-Logic-Reset state of the TAP controller.

chanhvinh.com

9. Initialized when realtime clock is not using EXTAL.
10. Retains the previous value after an internal power-on reset by means of the watchdog timer or the user debugging interface reset.

chanhvinh.com

chanhvinh.com
chanhvinh.com
chanhvinh.com

chanhvinh.com

Section 52 Electrical Characteristics

52.1 Absolute Maximum Ratings

Table 52.1 Absolute Maximum Ratings

Item		Symbol	Value	Unit
Power supply voltage (I/O)		PV_{CC}	–0.3 to 4.6	V
Power supply voltage (Internal)		V_{CC}	–0.3 to 1.7	V
PLL power supply voltage		$PLLV_{CC}$	–0.3 to 4.6	V
Analog power supply voltage		AV_{CC}	–0.3 to 4.6	V
Analog reference voltage		AV_{ref}	–0.3 to AV_{CC} +0.3	V
USB transceiver analog power supply voltage (I/O)		$USBAPV_{CC}$	–0.3 to 4.6	V
USB transceiver digital power supply voltage (I/O) Note: SH7269 (BGA) Group products do not have this pin.		$USBDPV_{CC}$	–0.3 to 4.6	V
USB transceiver analog power supply voltage (internal)		$USBAV_{CC}$	–0.3 to 1.7	V
USB transceiver digital power supply voltage (internal) Note: SH7269 (BGA) Group products do not have this pin.		$USBDV_{CC}$	–0.3 to 1.7	V
Power supply for USB 480 MHz (internal) Note: SH7269 (BGA) Group products do not have this pin.		$USBUV_{CC}$	–0.3 to 1.7	V
A/D converter power supply voltage for video signal input		$VDAV_{CC}$	–0.3 to 4.6	V
Input voltage	VBUS	V_{in}	–0.3 to 5.5	V
	Other input pins	V_{in}	–0.3- to 3.3-V power supply (PV_{CC}, $PLLV_{CC}$, AV_{CC}, $USBAPV_{CC}$, $USBDPV_{CC}$, $VDAV_{CC}$) +0.3	V
Operating temperature	Regular specifications	T_{opr}	–20 to +85	°C
	Wide-range specifications		–40 to +85	
Storage temperature		T_{stg}	–55 to +125	°C

Caution: Permanent damage to the LSI may result if absolute maximum ratings are exceeded.

chanhvinh.com

52.2 Power-On/Power-Off Sequence

The 1.2-V power supply (V_{CC}, $USBAV_{CC}$, $USBDV_{CC}$, and $USBUV_{CC}$) and 3.3-V power supply (PV_{CC}, $PLLV_{CC}$, AV_{CC}, $USBAPV_{CC}$, $USBDPV_{CC}$, and $VDAV_{CC}$) can be turned on and off in any order.

When turning on the power, be sure to drive both the $\overline{TRST}$ and $\overline{RES}$ pins low; otherwise, the output pins and input/output pins output undefined levels, resulting in system malfunction.

When turning off the power, drive the $\overline{TRST}$ and $\overline{RES}$ pins low if the undefined output may cause a problem.

chanhvinh.com

52.3 DC Characteristics

- Conditions used to obtain DC characteristics (2) and (3) in table 52.2 other than current consumption
  V_{cc} = $USBDV_{cc}$ = $USBUV_{cc}$ = 1.15 to 1.35 V,
  PV_{cc} = $USBDPV_{cc}$ = 3.0 to 3.6 V, $PLLV_{cc}$ = 3.0 to 3.6 V, AV_{cc} = 3.0 to 3.6 V, $USBAV_{cc}$ = 1.15 to 1.35 V,
  $USBAPV_{cc}$ = 3.0 to 3.6 V, VDAVcc = 3.0 to 3.6 V, V_{ss} = $PLLV_{ss}$ = AV_{ss} = $USBDV_{ss}$ = $USBAV_{ss}$ = $USBDPV_{ss}$ = $USBAPV_{ss}$ = $USBUV_{ss}$ = VDAVss = 0 V,
  T_a = –20 to 85 °C (regular specifications), –40 to 85 °C (wide-range specifications)

- Conditions used to obtain DC characteristics (2) and (3) in table 52.2 for current consumption
  V_{cc} = $USBDV_{cc}$ = $USBUV_{cc}$ = 1.25 V, PV_{cc} = $USBDPV_{cc}$ = 3.3 V, $PLLV_{cc}$ = 3.3 V, AV_{cc} = 3.3 V, $USBAV_{cc}$ = 1.25 V, $USBAPV_{cc}$ = 3.3 V, $VDAV_{cc}$ = 3.3 V, V_{ss} = $PLLV_{ss}$ = AV_{ss} = $USBDV_{ss}$ = $USBAV_{ss}$ = $USBDPV_{ss}$ = $USBAPV_{ss}$ = $USBUV_{ss}$ = VDAVss = 0 V,
  Avref = 3.3 V, VBUS = 5.0 V
  T_a = –20 to 85 °C (regular specifications), –40 to 85 °C (wide-range specifications)
  Iϕ = 266.67 MHz, Bϕ = 133.33 MHz, P1ϕ = 66.67 MHz, P0ϕ = 33.33 MHz

Note: SH7269 (BGA) Group products do not have pins $USBDV_{cc}$, $USBUV_{cc}$, $USBDPV_{cc}$, $PLLV_{ss}$, $USBDV_{ss}$, $USBAV_{ss}$, $USBUV_{ss}$, $USBDPV_{ss}$, and $USBAPV_{ss}$.

Table 52.2 DC Characteristics (1) [Common Items]

Item		Symbol	Min.	Typ.	Max.	Unit	Test Conditions
Power supply voltage		PV_{cc}	3.0	3.3	3.6	V	
		V_{cc}	1.15	1.25	1.35	V	
PLL power supply voltage		$PLLV_{cc}$	3.0	3.3	3.6	V	
Analog power supply voltage		AV_{cc}	3.0	3.3	3.6	V	
USB power supply voltage Note: SH7269 (BGA) Group products do not have pins USBDPVcc, USBDVcc, and USBUVcc.		$USBAPV_{cc}$ $USBDPV_{cc}$	3.0	3.3	3.6	V	
		$USBAV_{cc}$ $USBDV_{cc}$ $USBUV_{cc}$	1.15	1.25	1.35	V	
A/D converter power supply voltage for video signal input		$VDAV_{cc}$	3.0	3.3	3.6	V	
Input leakage current	All input pins	$\|I_{in}\|$	—	—	1.0	µA	V_{in} = 0.5 to PV_{cc} – 0.5 V

chanhvinh.com

Item		Symbol	Min.	Typ.	Max.	Unit	Test Conditions
Three-state leakage current	All input/output pins, all output pins (except PE7 to PE0) (off state)	$\|I_{STI}\|$	—	—	1.0	µA	V_{in} = 0.5 to PV_{CC} – 0.5 V
	PE7 to PE0		—	—	10	µA	
Input capacitance	USB 2.0 host/function module pins*	C_{in}	—	—	20	pF	
	all input/output pins, all input pins		—	—	10	pF	

Note: * DP, DM, VBUS pins

Table 52.2 DC Characteristics (2) [Current Consumption] SH7268/SH7269 (QFP)

Item	Power Supply	Symbol	Typ.	Max.	Unit	Test Conditions
Current consumption in normal operation	V_{CC}	I_{CC}	220	285	mA	
	$PLLV_{CC}$	$PLLI_{CC}$	11	13	mA	
	PV_{CC}	PI_{CC}*	92	—	mA	
	AV_{CC}	AI_{CC}	1	4	mA	During A/D conversion
			1	3	µA	Waiting for A/D conversion
	AVref	AIref	1	4	mA	During A/D conversion, waiting for A/D conversion
	$USBAV_{CC}$ + $USBDV_{CC}$ + $USBUV_{CC}$	UI_{CC}	19	22	mA	In USB high-speed operation
	$USBAPV_{CC}$ + $USBDPV_{CC}$	UPI_{CC}	44	47	mA	In USB high-speed operation
	VBUS	VI_{CC}	8.5	10	µA	
	$VDAV_{CC}$	$VDAI_{CC}$	7.5	8	mA	
Current consumption in sleep mode	V_{CC}	Isleep	170	240	mA	
	For the other power supply, the current consumption is the same as in normal operation.					

chanhvinh.com

Item		Power Supply	Symbol	Typ.	Max.	Unit	Test Conditions
Current consumption in software standby mode	Ta > 50 °C	V_{CC} + $USBAV_{CC}$ + $USBDV_{CC}$ + $USBUV_{CC}$	Isstby	7	65	mA	
		PV_{CC} + $PLLV_{CC}$ + $USBAPV_{CC}$ + $USBDPV_{CC}$ + $VDAV_{CC}$	PIsstby	4.5	6.5	mA	
		For the other power supply, the current consumption is the same as in normal operation.					
	Ta ≤ 50 °C	Vcc + $USBAV_{CC}$ + $USBDV_{CC}$ + $USBUV_{CC}$	Isstby	4	35	mA	
		PV_{CC} + $PLLV_{CC}$ + $USBAPV_{CC}$ + $USBDPV_{CC}$ + $VDAV_{CC}$	PIsstby	4.5	6.5	mA	
		For the other power supply, the current consumption is the same as in normal operation.					
Current consumption in deep standby mode	Ta > 50 °C	V_{CC} + $USBAV_{CC}$ + $USBDV_{CC}$ + $USBUV_{CC}$	Idstby	6	27	µA	RAM 0 Kbytes retained, RTC_X1 selected
				8	40	µA	RAM 16 Kbytes retained, RTC_X1 selected
				10	53	µA	RAM 32 Kbytes retained, RTC_X1 selected
				14	80	µA	RAM 64 Kbytes retained, RTC_X1 selected
				22	132	µA	RAM 128 Kbytes retained, RTC_X1 selected
				When the 13-MHz signal from EXTAL is selected, 5 and 6 µA are added to the "Typ." and "Max." values above, respectively.			

chanhvinh.com

Item		Power Supply	Symbol	Typ.	Max.	Unit	Test Conditions
Current consumption in deep standby mode	Ta > 50 °C	PV_{CC} + $PLLV_{CC}$ + AV_{CC} + AVref + $USBAPV_{CC}$ + $USBDPV_{CC}$ + $VDAV_{CC}$	PIdstby	5.5	20	µA	RTC is not operating
				9.5	24	µA	RTC_X1 selected
				1	—	mA	13-MHz frequency from EXTAL selected, small gain*
		VBUS	VI_{CC}	8.5	10	µA	
Current consumption in deep standby mode	Ta ≤ 50 °C	V_{CC} + $USBAV_{CC}$ + $USBDV_{CC}$ + $USBUV_{CC}$	Idstby	4	19	µA	RAM 0 Kbytes retained, RTC_X1 selected
				5.5	29	µA	RAM 16 Kbytes retained, RTC_X1 selected
				7	39	µA	RAM 32 Kbytes retained, RTC_X1 selected
				10	58	µA	RAM 64 Kbytes retained, RTC_X1 selected
				16	97	µA	RAM 128 Kbytes retained, RTC_X1 selected
				When the 13-MHz signal from EXTAL is selected, 5 and 6 µA are added to the "Typ." and "Max." values above, respectively.			
		PV_{CC} + $PLLV_{CC}$ + AV_{CC} + AVref + $USBAPV_{CC}$ + $USBDPV_{CC}$ + $VDAV_{CC}$	PIdstby	5	16	µA	RTC is not operating
				9	20	µA	RTC_X1 selected
				1	—	mA	13-MHz frequency from EXTAL selected, small gain*
		VBUS	VI_{CC}	8.5	10	µA	

Note: * Reference value. The actual operating current greatly depends on the system (such as slow rising/falling edges caused by IO load and toggle frequency). Be sure to determine the value using the actual system.

chanhvinh.com

Table 52.2 DC Characteristics (3) [Current Consumption] SH7269 (BGA)

Item	Power Supply	Symbol	Typ.	Max.	Unit	Test Conditions
Current consumption in normal operation	V_{CC}	I_{CC}	220	285	mA	USB is not operating
			In USB high-speed operation, 12 and 14 mA are added to the "Typ." and "Max." values above, respectively.			
	$PLLV_{CC}$	$PLLI_{CC}$	11	13	mA	
	PV_{CC}	PI_{CC}*	92	—	mA	USB is not operating
			In USB high-speed operation, 42 mA is added to the "Typ." value above.			
	AV_{CC}	AI_{CC}	1	4	mA	During A/D conversion
			1	3	µA	Waiting for A/D conversion
	AVref	AIref	1	4	mA	During A/D conversion, waiting for A/D conversion
	$USBAV_{CC}$	UI_{CC}	7	8	mA	In USB high-speed operation
	$USBAPV_{CC}$	UPI_{CC}	2	2.5	mA	In USB high-speed operation
	VBUS	VI_{CC}	8.5	10	µA	
	$VDAV_{CC}$	$VDAI_{CC}$	7.5	8	mA	
Current consumption in sleep mode	V_{CC}	Isleep	170	240	mA	
			In USB high-speed operation, 12 and 14 mA are added to the "Typ." and "Max." values above, respectively.			
	For the other power supply, the current consumption is the same as in normal operation.					

chanhvinh.com

Item		Power Supply	Symbol	Typ.	Max.	Unit	Test Conditions
Current consumption in software standby mode	Ta > 50 °C	V_{CC} + USBAV$_{CC}$	Isstby	7	65	mA	
		PV$_{CC}$ + PLLV$_{CC}$ + USBAPV$_{CC}$ + VDAV$_{CC}$	PIsstby	4.5	6.5	mA	
		For the other power supply, the current consumption is the same as in normal operation.					
	Ta ≤ 50 °C	V_{CC} + USBAV$_{CC}$	Isstby	4	35	mA	
		PV$_{CC}$ + PLLV$_{CC}$ + USBAPV$_{CC}$ + VDAV$_{CC}$	PIsstby	4.5	6.5	mA	
		For the other power supply, the current consumption is the same as in normal operation.					
Current consumption in deep standby mode	Ta > 50 °C	V_{CC} + USBAV$_{CC}$	Idstby	6	27	µA	RAM 0 Kbytes retained, RTC_X1 selected
				8	40	µA	RAM 16 Kbytes retained, RTC_X1 selected
				10	53	µA	RAM 32 Kbytes retained, RTC_X1 selected
				14	80	µA	RAM 64 Kbytes retained, RTC_X1 selected
				22	132	µA	RAM 128 Kbytes retained, RTC_X1 selected
				When the 13-MHz signal from EXTAL is selected, 5 and 6 µA are added to the "Typ." and "Max." values above, respectively.			
		PV$_{CC}$ + PLLV$_{CC}$ + AV$_{CC}$ + AVref + USBAPV$_{CC}$ + VDAV$_{CC}$	PIdstby	5.5	20	µA	RTC is not operating
				9.5	24	µA	RTC_X1 selected
				1	—	mA	13-MHz frequency from EXTAL selected, small gain*
		VBUS	VIcc	8.5	10	µA	

chanhvinh.com

Item		Power Supply	Symbol	Typ.	Max.	Unit	Test Conditions
Current consumption in deep standby mode	Ta ≤ 50 °C	V_{CC} + $USBAV_{CC}$	Idstby	4	19	µA	RAM 0 Kbytes retained, RTC_X1 selected
				5.5	29	µA	RAM 16 Kbytes retained, RTC_X1 selected
				7	39	µA	RAM 32 Kbytes retained, RTC_X1 selected
				10	58	µA	RAM 64 Kbytes retained, RTC_X1 selected
				16	97	µA	RAM 128 Kbytes retained, RTC_X1 selected
				When the 13-MHz signal from EXTAL is selected, 5 and 6 µA are added to the "Typ." and "Max." values above, respectively.			
		PV_{CC} + $PLLV_{CC}$ + AV_{CC} + AVref + $USBAPV_{CC}$ + $VDAV_{CC}$	PIdstby	5	16	µA	RTC is not operating
				9	20	µA	RTC_X1 selected
				1	—	mA	13-MHz frequency from EXTAL selected, small gain*
		VBUS	VIcc	8.5	10	µA	

Note: * Reference value. The actual operating current greatly depends on the system (such as slow rising/falling edges caused by IO load and toggle frequency). Be sure to determine the value using the actual system.

chanhvinh.com

Table 52.2 DC Characteristics (4) [Except I²C Bus Interface 3, and USB 2.0 Host/Function Module-Related Pins]

Item		Symbol	Min.	Typ.	Max.	Unit	Test Conditions
Input high voltage (except Schmitt pins)		V_{IH}	2.2	—	PV_{CC} + 0.3	V	
Input low voltage (except Schmitt pins)		V_{IL}	–0.3	—	0.8	V	
Schmitt trigger input characteristics		V_T^+	$PV_{CC} \times 0.75$	—	—	V	
		V_T^-	—	—	0.5	V	
		$V_T^+ - V_T^-$	0.2	—	—	V	
Output high voltage		V_{OH}	PV_{CC} – 0.5	—	—	V	I_{OH} = –2.0 mA
Output low voltage		V_{OL}	—	—	0.4	V	I_{OL} = 2.0 mA
RAM standby voltage	Software standby mode (high-speed on-chip RAM and large-capacity on-chip RAM)	V_{RAMS}	0.85	—	—	V	Measured with V_{CC} (= $PLLV_{CC}$) as parameter
	Deep standby mode (only the on-chip RAM for data retention)	V_{RAMD}	1.15	—	—	V	

Table 52.2 DC Characteristics (5) [I²C Bus Interface 3-Related Pins*]

Item	Symbol	Min.	Typ.	Max.	Unit	Test Conditions
Input high voltage	V_{IH}	$PV_{CC} \times 0.7$	—	PV_{CC} + 0.3	V	
Input low voltage	V_{IL}	–0.3	—	$PV_{CC} \times 0.3$	V	
Schmitt trigger input characteristics	$V_{IH} - V_{IL}$	$PV_{CC} \times 0.05$	—	—	V	
Output low voltage	V_{OL}	—	—	0.4	V	I_{OL} = 3.0 mA

Note: * The PE7/SDA3/RxD7 to PE0/SCL0/TCLKA/LCD_EXTCLK pins are open-drain pins.

chanhvinh.com

Table 52.2 DC Characteristics (6) [USB 2.0 Host/Function Module-Related Pins*]

Item	Symbol	Min.	Typ.	Max.	Unit	Test Conditions
Reference resistance	R_{REF}	5.6 kΩ ± 1%	5.6 kΩ ± 1%	5.6 kΩ ± 1%		
Input high voltage (VBUS)	V_{IH}	4.02	—	5.25	V	
Input low voltage (VBUS)	V_{IL}	–0.3	—	0.5	V	
Input high voltage (USB_X1)	V_{IH}	PV_{CC} – 0.5	—	PV_{CC} + 0.3	V	
Input low voltage (USB_X1)	V_{IL}	–0.3	—	0.5	V	

Note: * REFRIN, VBUS, USB_X1, and USB_X2 pins

Table 52.2 DC Characteristics (7) [USB 2.0 Host/Function Module-Related Pins* (Low-Speed, Full-Speed, and High-Speed Common Items)]

Item	Symbol	Min.	Typ.	Max.	Unit	Test Conditions
DP pull-up resistance (when function is selected)	R_{pu}	0.900	—	1.575	kΩ	In idle mode
		1.425	—	3.090	kΩ	In transmit/ receive mode
DP and DM pull-down resistance (when host is selected)	R_{pd}	14.25	—	24.80	kΩ	

Note: * DP and DM pins

chanhvinh.com

Table 52.2 DC Characteristics (8) [USB 2.0 Host/Function Module-Related Pins* (Low-Speed and Full-Speed)]

Item	Symbol	Min.	Typ.	Max.	Unit	Test Conditions
Input high voltage	V_{IH}	2.0	—	—	V	
Input low voltage	V_{IL}	—	—	0.8	V	
Differential input sensitivity	V_{DI}	0.2	—	—	V	| (DP) – (DM) |
Differential common mode range	V_{CM}	0.8	—	2.5	V	
Output high voltage	V_{OH}	2.8	—	3.6	V	I_{OH} = –200 μA
Output low voltage	V_{OL}	0.0	—	0.3	V	I_{OL} = 2 mA
Output signal crossover voltage	V_{CRS}	1.3	—	2.0	V	C_L = 50 pF (full-speed) C_L = 200 to 600 pF (low-speed)

Note: * DP and DM pins

Table 52.2 DC Characteristics (9) [USB 2.0 Host/Function Module-Related Pins* (High-Speed)]

Item	Symbol	Min.	Typ.	Max.	Unit	Test Conditions
Squelch detection threshold voltage (differential voltage)	V_{HSSQ}	100	—	150	mV	
Common mode voltage range	V_{HSCM}	–50	—	500	mV	
Idle state	V_{HSOI}	–10.0	—	10.0	mV	
Output high voltage	V_{HSOH}	360	—	440	mV	
Output low voltage	V_{HSOL}	–10.0	—	10.0	mV	
Chirp J output voltage (difference)	V_{CHIRPJ}	700	—	1100	mV	
Chirp K output voltage (difference)	V_{CHIRPK}	–900	—	–500	mV	

Note: * DP and DM pins

chanhvinh.com

Table 52.3 Permissible Output Currents

Item		Symbol	Min.	Typ.	Max.	Unit
Permissible output low current (per pin)	PE7 to PE0	I_{OL}	—	—	10	mA
	Output pins other than above				2	mA
Permissible output low current (total)		ΣI_{OL}	—	—	150	mA
Permissible output high current (per pin)		$-I_{OH}$	—	—	2	mA
Permissible output high current (total)		$\Sigma -I_{OH}$	—	—	150	mA

Caution: To protect the LSI's reliability, do not exceed the output current values in table 52.3.

chanhvinh.com

52.4 AC Characteristics

Signals input to this LSI are basically handled as signals in synchronization with a clock. The setup and hold times for input pins must be followed.

- Conditions for AC characteristics

  V_{cc} = USBDV_{cc} = USBUV_{cc} = 1.15 to 1.35 V,
  PV_{cc} = USBDPV_{cc} = 3.0 to 3.6 V, PLLV_{cc} = 3.0 to 3.6 V, AV_{cc} = 3.0 to 3.6 V, USBAV_{cc} = 1.15 to 1.35 V, USBAPV_{cc} = 3.0 to 3.6 V, VDAV_{cc} = 3.0 to 3.6 V, V_{ss} = PLLV_{ss} = AV_{ss} = USBDV_{ss} = USBAV_{ss} = USBDPV_{ss} = USBAPV_{ss} = USBUV_{ss} = VDAV_{ss} = 0 V,
  T_a = –20 to 85 °C (regular specifications), –40 to 85 °C (wide-range specifications)

Note: SH7269 (BGA) Group products do not have the USBDV_{cc}, USBUV_{cc}, USBDPV_{cc}, PLLV_{ss}, USBDV_{ss}, USBAV_{ss}, USBUV_{ss}, USBDPV_{ss}, and USBAPV_{ss} pins.

Table 52.4 Operating Frequency

Item		Symbol	Min.	Max.	Unit	Remarks
Operating frequency	CPU clock (Iϕ)	f	50.00	266.67	MHz	
	Internal bus clock (Bϕ)		50.00	133.33	MHz	
	Peripheral clock 1 (P1ϕ)		50.00	66.67	MHz	
	Peripheral clock 0 (P0ϕ)		25.00	33.33	MHz	

52.4.1 Clock Timing

Table 52.5 Clock Timing

Item	Symbol	Min.	Max.	Unit	Figure
EXTAL clock input frequency (when the clock is supplied to USB 2.0 host/function module)	f_{EX}	12MHz ± 100ppm			Figure 52.1
EXTAL clock input frequency (when the clock isn't supplied to USB 2.0 host/function module)		10.00	13.33	MHz	
EXTAL clock input cycle time (when the clock isn't supplied to USB 2.0 host/function module)	t_{EXcyc}	75.00	100.00	ns	
AUDIO_X1 clock input frequency (crystal resonator connected)	f_{EX}	10.00	50.00	MHz	
AUDIO_X1 clock input cycle time (crystal resonator connected)	t_{EXcyc}	20.00	100.00	ns	

chanhvinh.com

Item	Symbol	Min.	Max.	Unit	Figure
AUDIO_X1, AUDIO_CLK clock input frequency (external clock input)	f_{EX}	1.00	50.00	MHz	Figure 52.1
AUDIO_X1, AUDIO_CLK clock input cycle time (external clock input)	t_{EXcyc}	20.00	1000.00	ns	
USB_X1 clock input frequency (when the 12-MHz clock is supplied to USB 2.0 host/function module)	f_{EX}	12 MHz ±100 ppm			
USB_X1 clock input frequency (when the 48-MHz clock is supplied to USB 2.0 host/function module and high-speed transfer function is used)		48 MHz ±100 ppm			
USB_X1 clock input frequency (when the 48-MHz clock is supplied to USB 2.0 host/function module, high-speed transfer function is not used, and host controller function is used)		48 MHz ±500 ppm			
USB_X1 clock input frequency (when the 48-MHz clock is supplied to USB 2.0 host/function module, high-speed transfer function is not used, and host controller function is not used)		48 MHz ±2500 ppm			
VIDEO_X1 clock input frequency	f_{EX}	27 MHz ±100 ppm*			
EXTAL, AUDIO_X1, AUDIO_CLK, USB_X1 clock input low pulse width	t_{EXL}	0.4	0.6	t_{EXcyc}	
VIDEO_X1 clock input low pulse width		0.45	0.55		
EXTAL, AUDIO_X1, AUDIO_CLK, USB_X1 clock input high pulse width	t_{EXH}	0.4	0.6	t_{EXcyc}	
VIDEO_X1 clock input high pulse width		0.45	0.55		
EXTAL, AUDIO_X1, AUDIO_CLK, USB_ X1 clock input rise time	t_{EXr}	—	4	ns	
VIDEO_X1 clock input rise time		—	3		
EXTAL, AUDIO_X1, AUDIO_CLK, USB_ X1 clock input fall time	t_{EXf}	—	4	ns	
VIDEO_X1 clock input fall time		—	3		
CKIO clock output frequency	f_{OP}	50.00	66.67	MHz	
CKIO clock output cycle time	t_{cyc}	15.00	20.00	ns	Figures 52.2 (1) and 52.2 (2)

chanhvinh.com

Item	Symbol	Min.	Max.	Unit	Figure
CKIO clock output low pulse width 1	t_{CKOL1}	$t_{cyc}/2 - t_{CKOr1}$	—	ns	Figure 52.2 (1)
CKIO clock output high pulse width 1	t_{CKOH1}	$t_{cyc}/2 - t_{CKOr1}$	—	ns	
CKIO clock output rise time 1	t_{CKOr1}	—	3	ns	
CKIO clock output fall time 1	t_{CKOf1}	—	3	ns	
CKIO clock output low pulse width 2	t_{CKOL2}	$t_{cyc}/2 - t_{CKOr2}$	—	ns	Figure 52.2 (2)
CKIO clock output high pulse width 2	t_{CKOH2}	$t_{cyc}/2 - t_{CKOr2}$	—	ns	
CKIO clock output rise time 2	t_{CKOr2}	—	2	ns	
CKIO clock output fall time 2	t_{CKOf2}	—	2	ns	
Power-on oscillation settling time	t_{OSC1}	10	—	ms	Figure 52.3
Oscillation settling time 1 on return from standby	t_{OSC2}	10	—	ms	Figure 52.4
Real time clock oscillation settling time	t_{ROSC}	3	—	s	Figure 52.6
Mode hold time	t_{MDH}	200	—	ns	Figures 52.3 and 52.4

Note: * Reference value. The accuracy of the clock signal affects the quality of images output by the digital video decoder. Input clock signals that are as accurate as is possible.

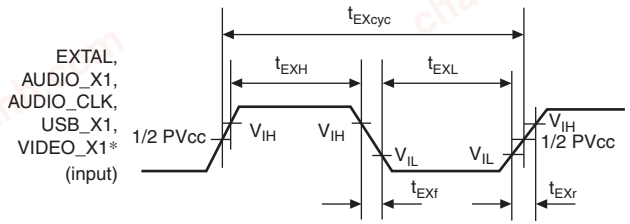

Note: * When the clock is input on the EXTAL, AUDIO_X1, AUDIO_CLK, USB_X1, or VIDEO_X1

Figure 52.1 EXTAL, AUDIO_X1, AUDIO_CLK, USB_X1, and VIDEO_X1 Clock Input Timing

chanhvinh.com

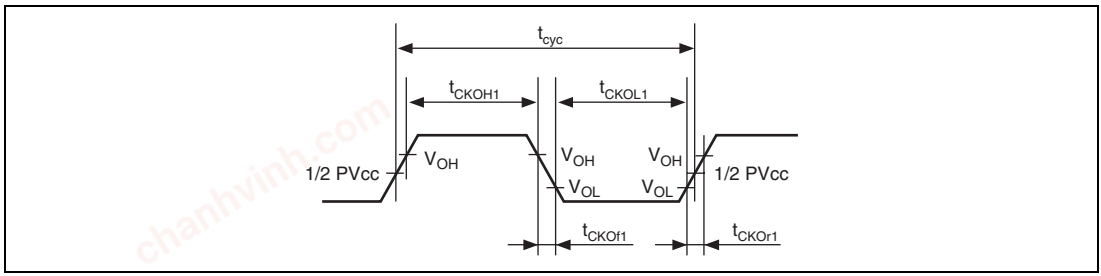

Figure 52.2 (1) CKIO Clock Output Timing 1

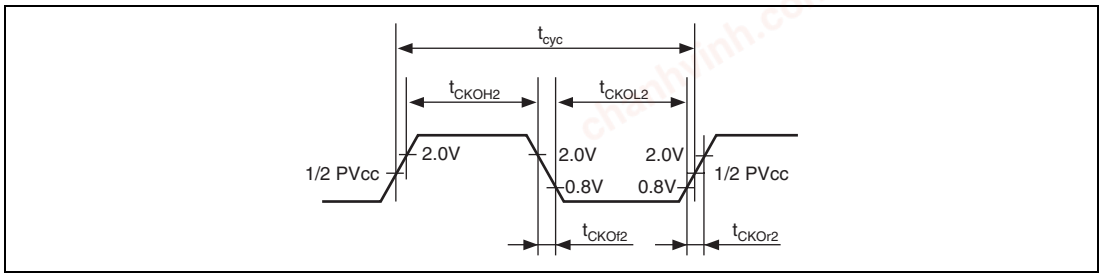

Figure 52.2 (2) CKIO Clock Output Timing 2

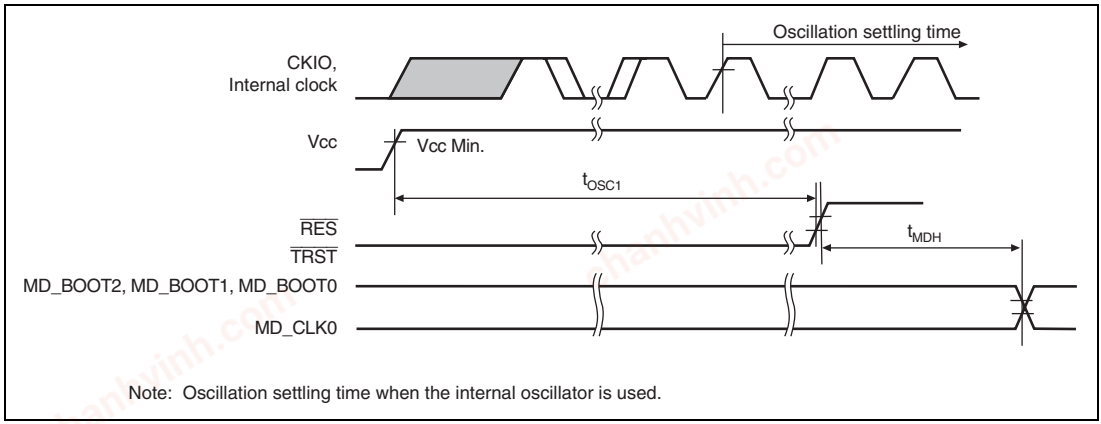

Figure 52.3 Power-On Oscillation Settling Time

chanhvinh.com

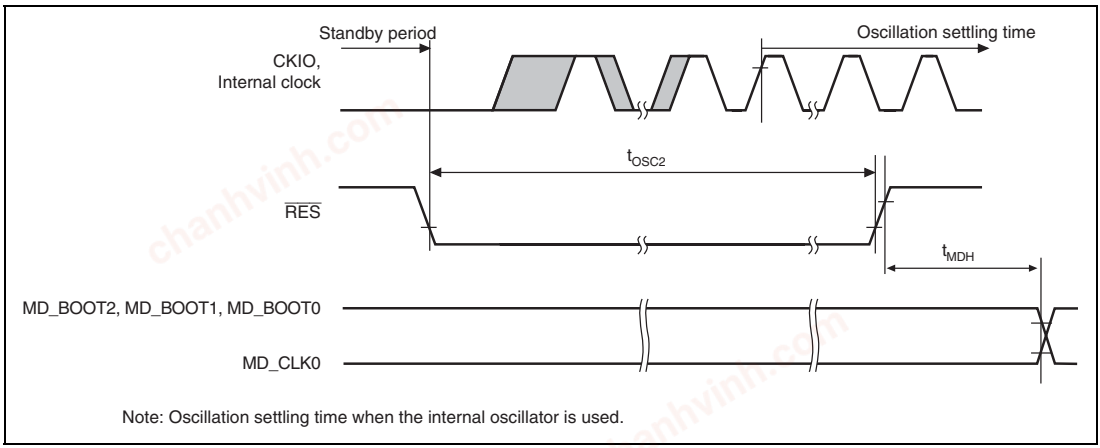

Figure 52.4 Oscillation Settling Time on Return from Standby (Return by Reset)

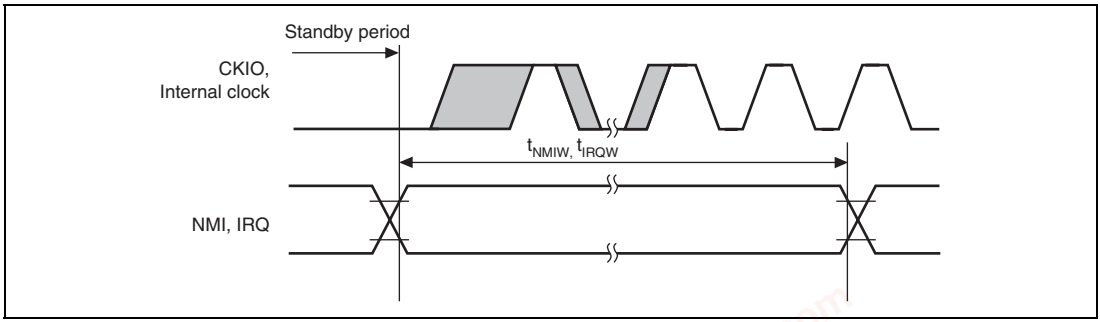

Figure 52.5 Oscillation Settling Time on Return from Standby (Return by NMI or IRQ)

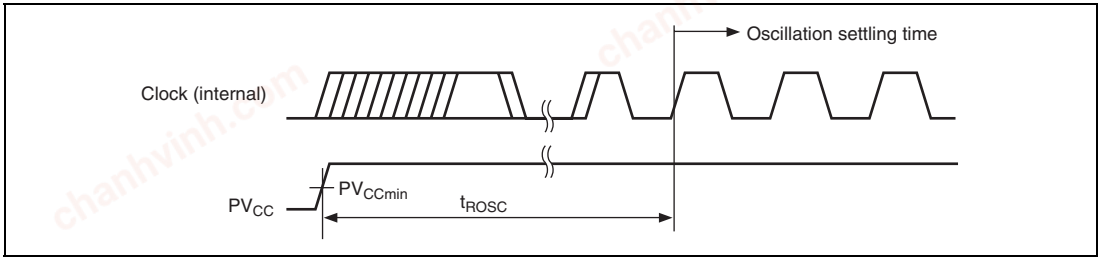

Figure 52.6 Real Time Clock Oscillation Settling Time

chanhvinh.com

52.4.2 Control Signal Timing

Table 52.6 Control Signal Timing

Item		Symbol	Min.	Max.	Unit	Figure
$\overline{RES}$ pulse width	Exit from standby mode	t_{RESW}	10	—	ms	Figure 52.7 (1)
	Other than above		20	—	t_{cyc}	
$\overline{TRST}$ pulse width		t_{TRSW}	20	—	t_{cyc}	
NMI pulse width		t_{NMIW}	20	—	t_{cyc}	Figures 52.7 (2) and 52.5
IRQ pulse width		t_{IRQW}	20	—	t_{cyc}	
PINT pulse width		t_{PINTW}	20	—	t_{cyc}	Figure 52.7 (2)
$\overline{BREQ}$ setup time		t_{BREQS}	$1/2t_{cyc}$ + 7	—	ns	Figure 52.8
$\overline{BREQ}$ hold time		t_{BREQH}	$1/2t_{cyc}$ + 2	—	ns	
$\overline{BACK}$ delay time		t_{BACKD}	—	$1/2t_{cyc}$ + 13	ns	
Bus buffer off time 1		t_{BOFF1}	—	15	ns	
Bus buffer off time 2		t_{BOFF2}	—	15	ns	
Bus buffer on time 1		t_{BON1}	—	15	ns	
Bus buffer on time 2		t_{BON2}	—	15	ns	
$\overline{BACK}$ setup time before the bus buffer off timing		t_{BACKS}	0	—	ns	

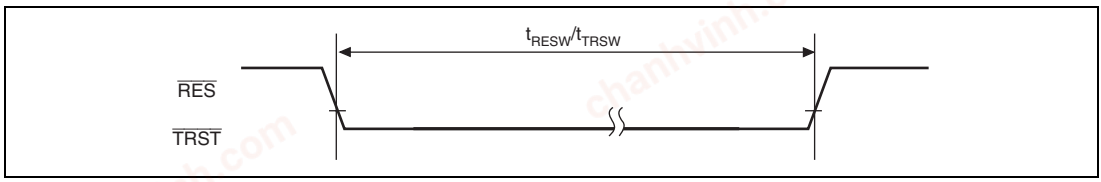

Figure 52.7 (1) Reset Input Timing

chanhvinh.com

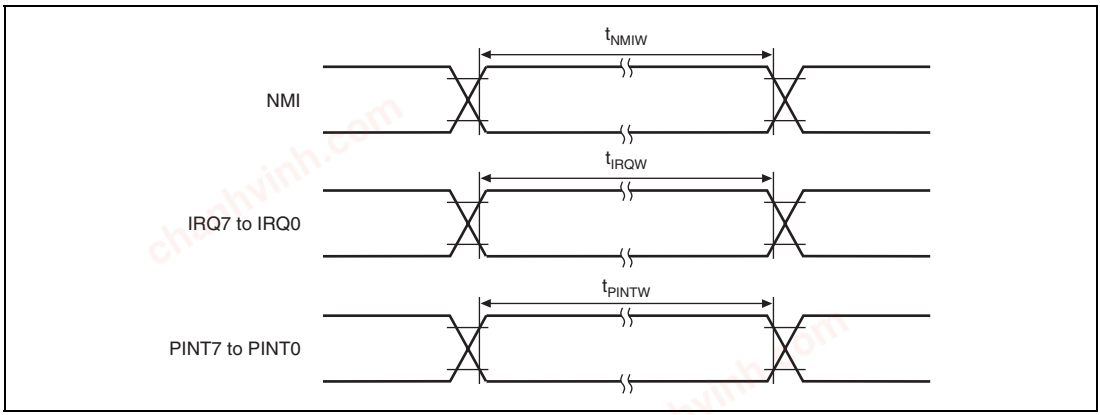

Figure 52.7 (2) Interrupt Signal Input Timing

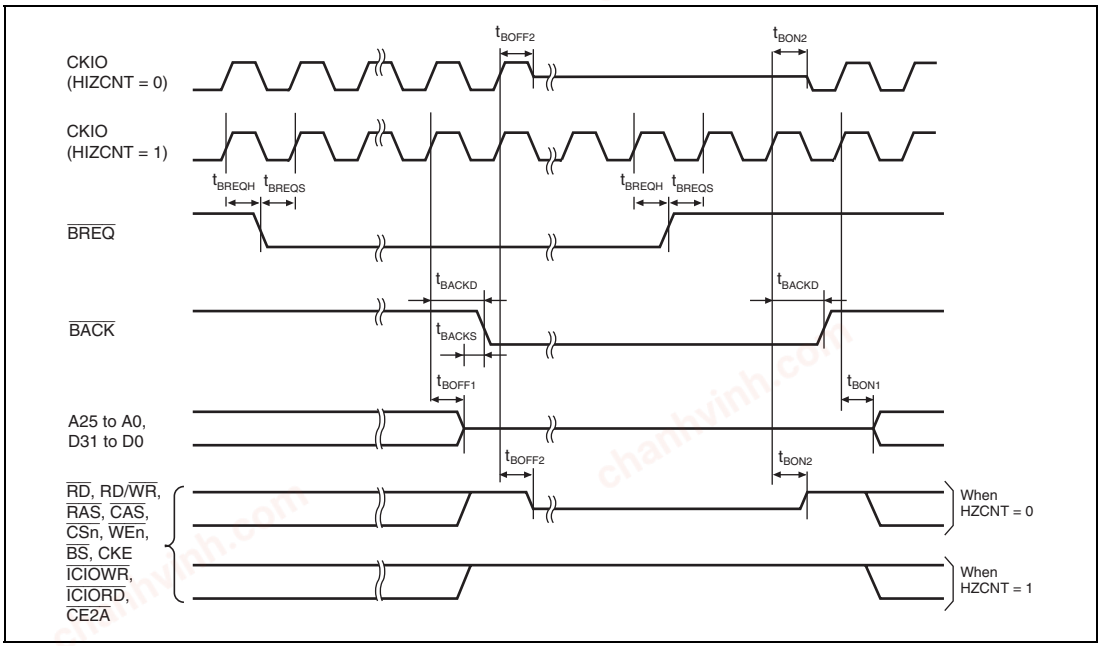

Figure 52.8 Bus Release Timing

chanhvinh.com

52.4.3 Bus Timing

Table 52.7 Bus Timing

		CKIO = 66.67 MHz*1			
Item	**Symbol**	**Min.**	**Max.**	**Unit**	**Figure**
Address delay time 1	t_{AD1}	0/2*3	12	ns	Figures 52.9 to 52.33, 52.34 to 52.37
Address delay time 2	t_{AD2}	$1/2t_{cyc}$	$1/2t_{cyc}$ + 12	ns	Figure 52.16
Address setup time	t_{AS}	0	—	ns	Figures 52.9 to 52.12, 52.16
Chip enable setup time	t_{CS}	0	—	ns	Figures 52.9 to 52.12, 52.16
Address hold time	t_{AH}	0	—	ns	Figures 52.9 to 52.12
$\overline{BS}$ delay time	t_{BSD}	—	12	ns	Figures 52.9 to 52.30, 52.34 to 52.37
$\overline{CS}$ delay time 1	t_{CSD1}	0/2*3	12	ns	Figures 52.9 to 52.33, 52.34 to 52.37
Read write delay time 1	t_{RWD1}	0/2*3	12	ns	Figures 52.9 to 52.33, 52.34 to 52.37
Read strobe delay time	t_{RSD}	$1/2t_{cyc}$	$1/2t_{cyc}$ + 12	ns	Figures 52.9 to 52.16, 52.34, 52.35
Read data setup time 1	t_{RDS1}	$1/2t_{cyc}$+ 5	—	ns	Figures 52.9 to 52.15, 52.34 to 52.37
Read data setup time 2	t_{RDS2}	7	—	ns	Figures 52.17 to 52.20, 52.25 to 52.27
Read data setup time 3	t_{RDS3}	$1/2t_{cyc}$ + 5	—	ns	Figure 52.16
Read data hold time 1	t_{RDH1}	0	—	ns	Figures 52.9 to 52.15, 52.34 to 52.37
Read data hold time 2	t_{RDH2}	2	—	ns	Figures 52.17 to 52.20, 52.25 to 52.27
Read data hold time 3	t_{RDH3}	0	—	ns	Figure 52.16
Write enable delay time 1	t_{WED1}	$1/2t_{cyc}$	$1/2t_{cyc}$ + 12	ns	Figures 52.9 to 52.14, 52.34, 52.35
Write enable delay time 2	t_{WED2}	—	12	ns	Figure 52.15
Write data delay time 1	t_{WDD1}	—	12	ns	Figures 52.9 to 52.15, 52.34 to 52.37
Write data delay time 2	t_{WDD2}	—	12	ns	Figures 52.21 to 52.24, 52.28 to 52.30

chanhvinh.com

Item	Symbol	CKIO = 66.67 MHz*1 Min.	Max.	Unit	Figure
Write data hold time 1	t_{WDH1}	1	—	ns	Figures 52.9 to 52.15, 52.34 to 52.37
Write data hold time 2	t_{WDH2}	2	—	ns	Figures 52.21 to 52.24, 52.28 to 52.30
Write data hold time 4	t_{WDH4}	0	—	ns	Figures 52.9 to 52.13, 52.34, 52.36
$\overline{WAIT}$ setup time	t_{WTS}	$1/2t_{cyc}$ + 4.5	—	ns	Figures 52.10 to 52.16, 52.35, 52.37
$\overline{WAIT}$ hold time	t_{WTH}	$1/2t_{cyc}$ + 3.5	—	ns	Figures 52.10 to 52.16, 52.35, 52.37
$\overline{IOIS16}$ setup time	T_{IO16S}	$1/2t_{cyc}$ + 4.5	—	ns	Figure 52.37
$\overline{IOIS16}$ hold time	T_{IO16H}	$1/2t_{cyc}$ + 3.5	—	ns	Figure 52.37
$\overline{RAS}$ delay time 1	t_{RASD1}	2	12	ns	Figures 52.17 to 52.33
$\overline{CAS}$ delay time 1	t_{CASD1}	2	12	ns	Figures 52.17 to 52.33
DQM delay time 1	t_{DQMD1}	2	12	ns	Figures 52.17 to 52.30
CKE delay time 1	t_{CKED1}	2	12	ns	Figure 52.32
$\overline{AH}$ delay time	t_{AHD}	$1/2t_{cyc}$	$1/2t_{cyc}$ + 12	ns	Figure 52.13
Multiplexed address delay time	t_{MAD}	—	12	ns	Figure 52.13
Multiplexed address hold time	t_{MAH}	1	—	ns	Figure 52.13
Address setup time for $\overline{AH}$	t_{AVVH}	$1/2t_{cyc}$ – 2	—	ns	Figure 52.13
DACK, TEND delay time	t_{DACD}	Refer to the direct memory access controller timing		ns	Figures 52.9 to 52.30, 52.34 to 52.37
$\overline{ICIORD}$ delay time	t_{ICRSD}	—	$1/2t_{cyc}$ + 12	ns	Figures 52.36 and 52.37
$\overline{ICIOWR}$ delay time	t_{ICWSD}	—	$1/2t_{cyc}$ + 12	ns	Figures 52.36 and 52.37

Notes: 1. The maximum value (fmax) of CKIO (external bus clock) depends on the number of wait cycles and the system configuration of your board.

2. 1/2 t_{cyc} indicated in minimum and maximum values for the item of delay, setup, and hold times represents a half cycle from the rising edge with a clock. That is, 1/2 t_{cyc} describes a reference of the falling edge with a clock.

3. Values when SDRAM is used.

chanhvinh.com

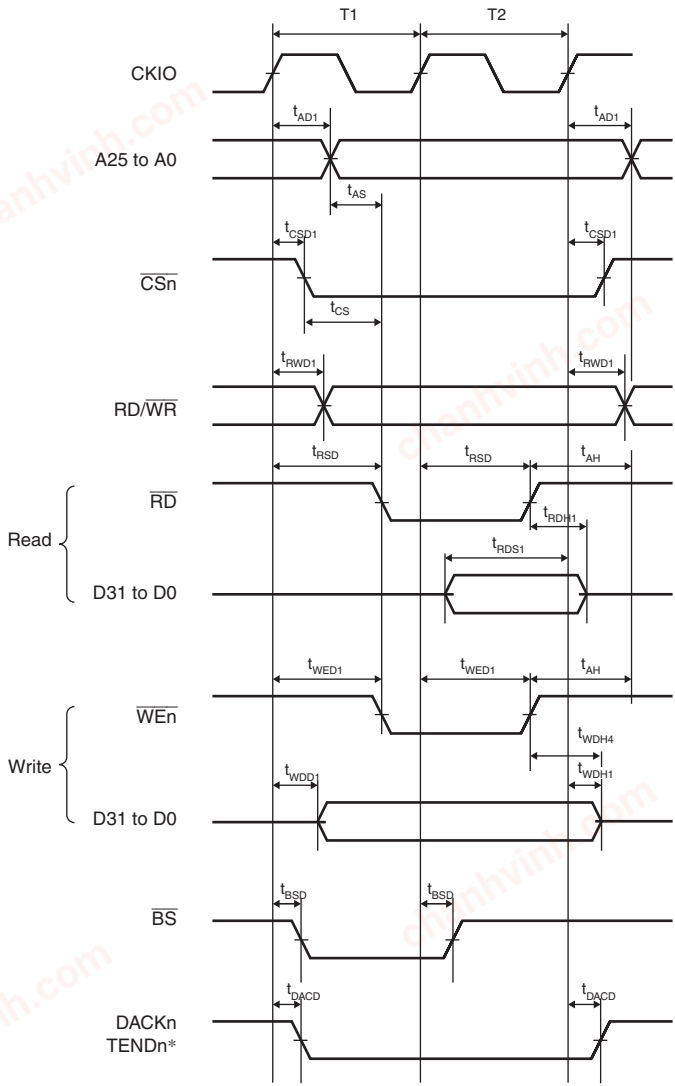

Note: * The waveform for DACKn and TENDn is when active low is specified.

Figure 52.9 Basic Bus Timing for Normal Space (No Wait)

chanhvinh.com

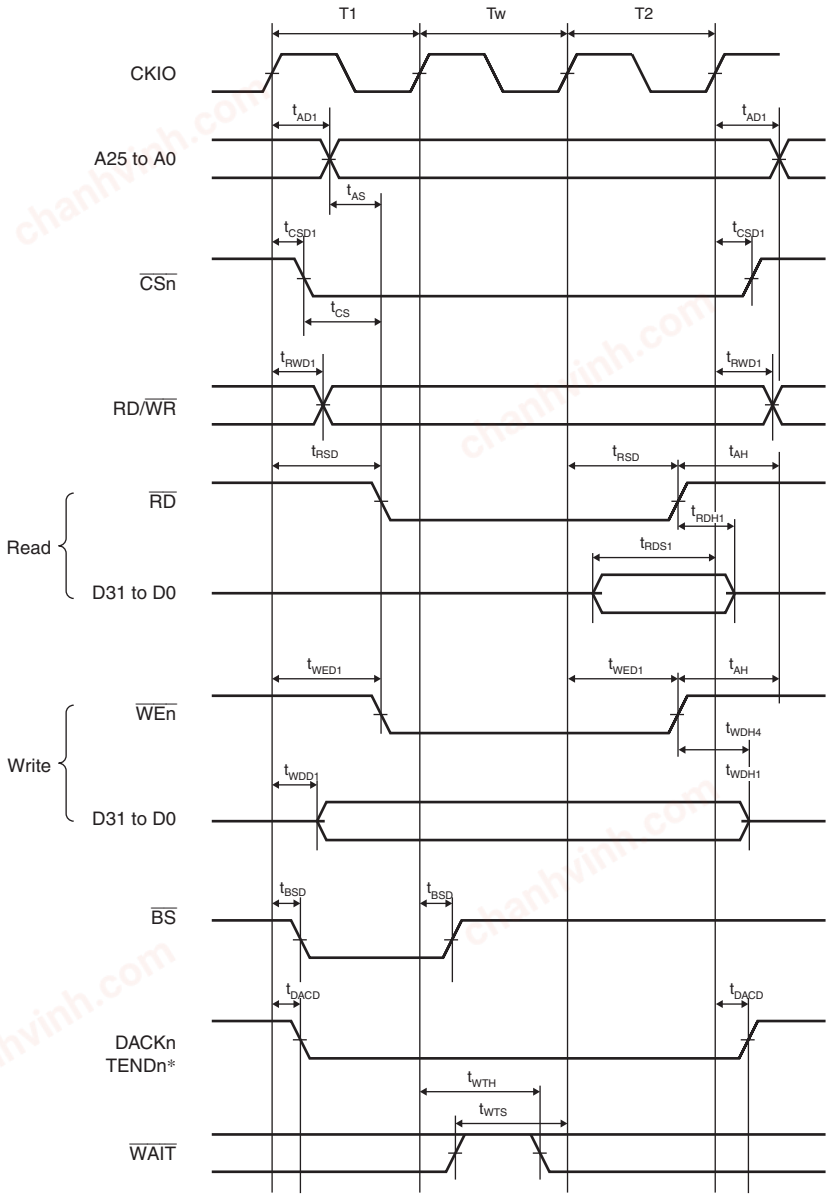

Note: * The waveform for DACKn and TENDn is when active low is specified.

Figure 52.10 Basic Bus Timing for Normal Space (One Software Wait Cycle)

chanhvinh.com

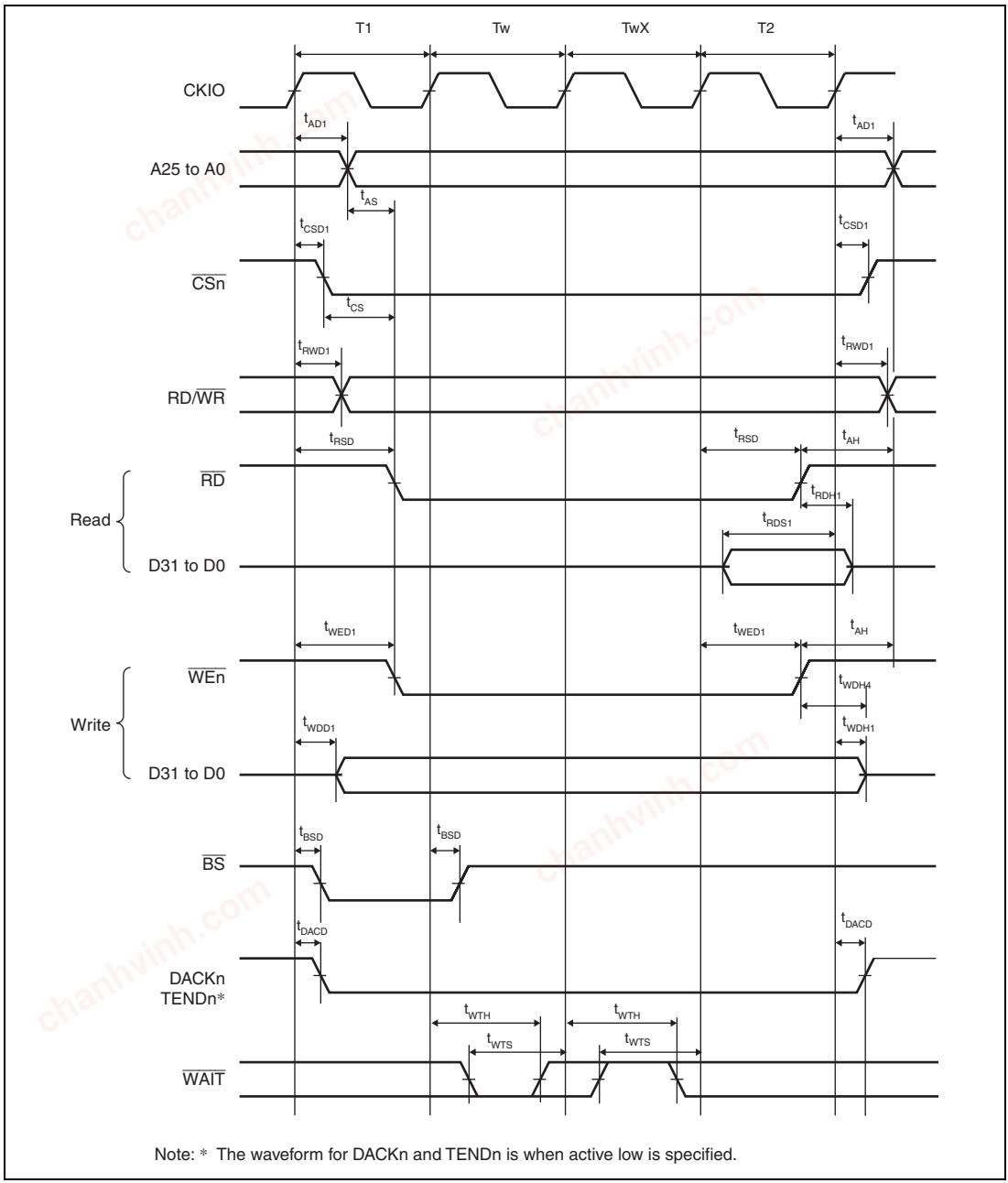

Note: * The waveform for DACKn and TENDn is when active low is specified.

Figure 52.11 Basic Bus Timing for Normal Space (One Software Wait Cycle, One External Wait Cycle)

chanhvinh.com

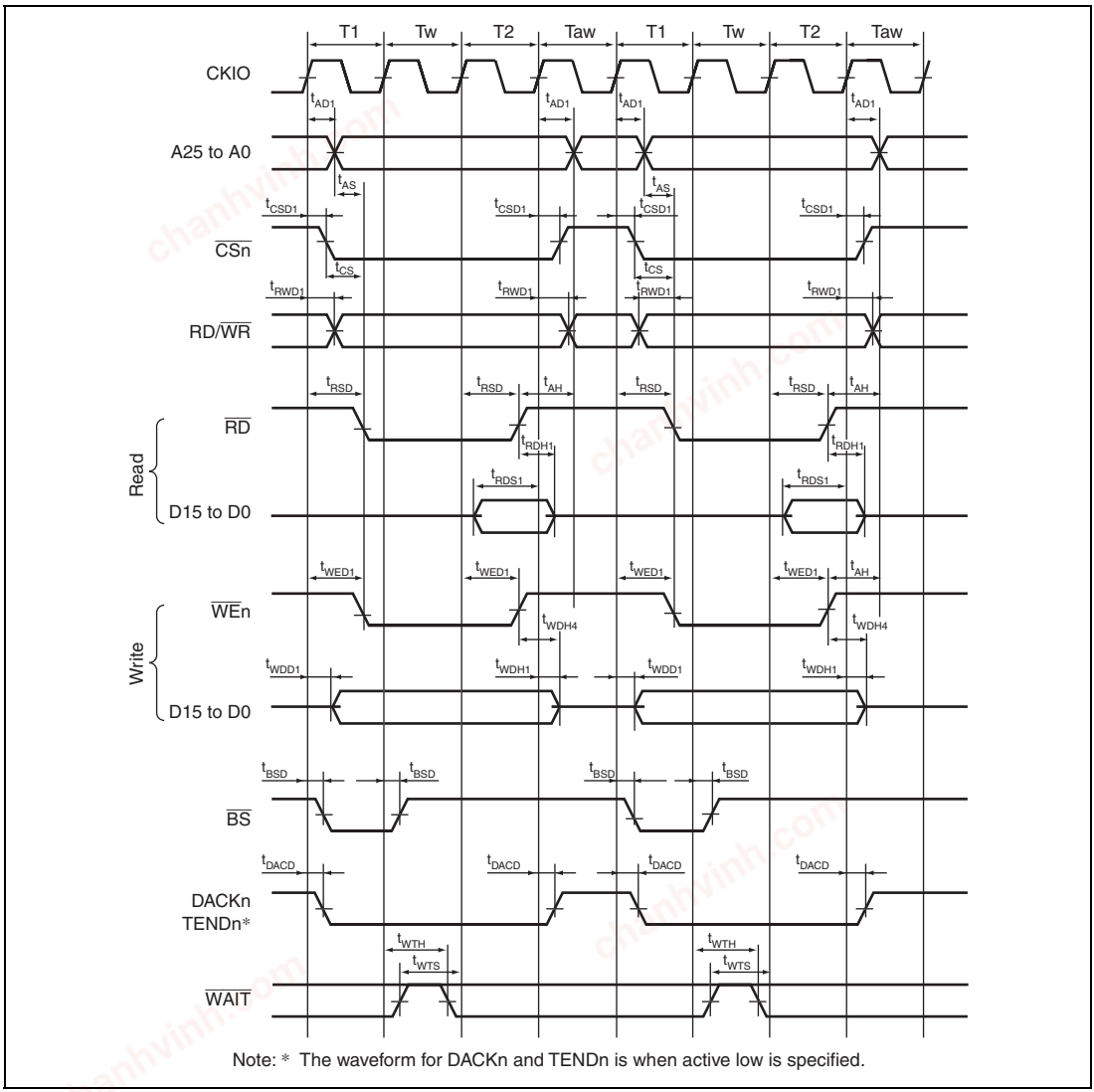

Note: * The waveform for DACKn and TENDn is when active low is specified.

Figure 52.12 Basic Bus Timing for Normal Space
(One Software Wait Cycle, External Wait Cycle Valid (WM Bit = 0), No Idle Cycle)

chanhvinh.com

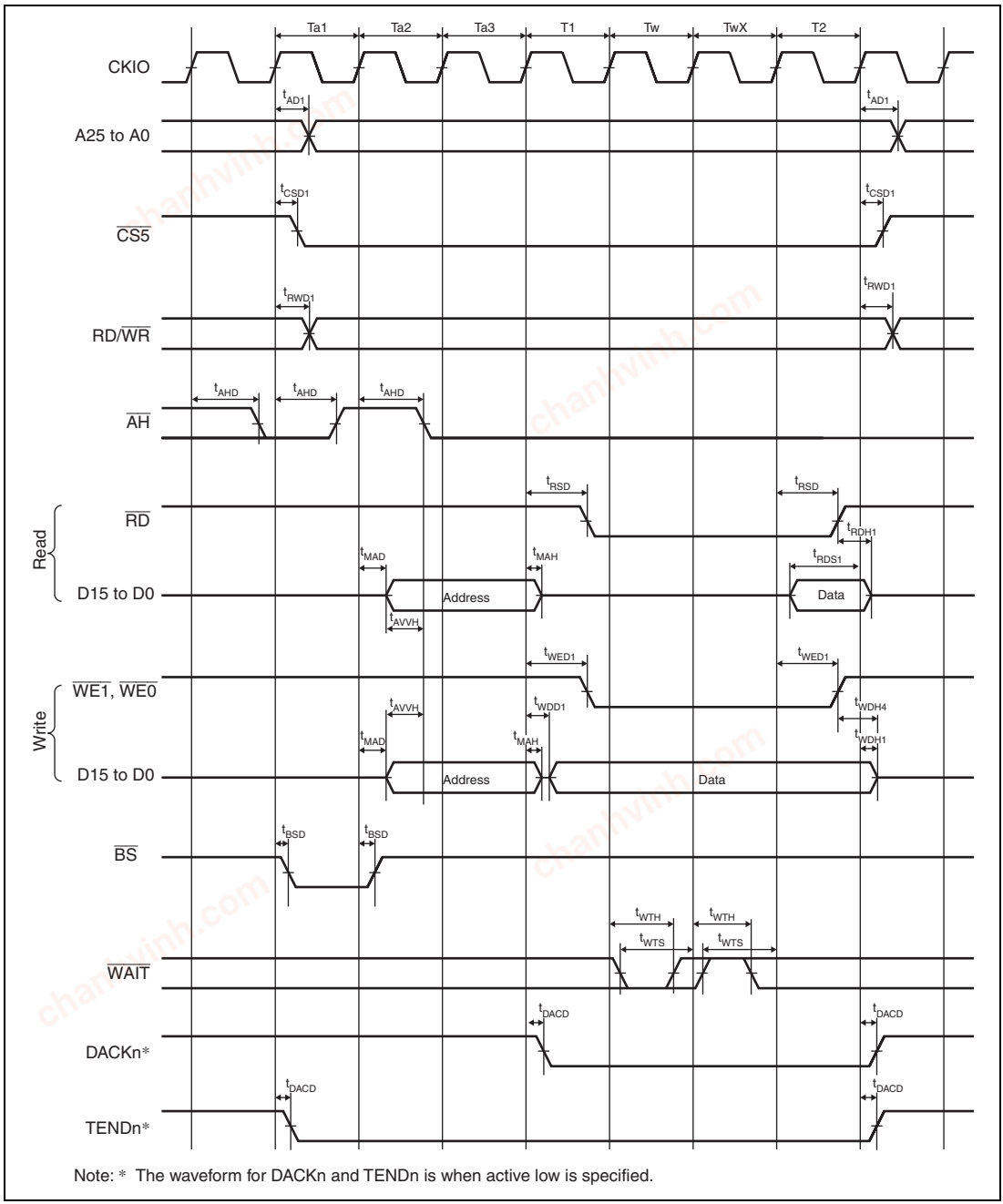

Note: * The waveform for DACKn and TENDn is when active low is specified.

Figure 52.13 MPX-I/O Interface Bus Cycle
(Three Address Cycles, One Software Wait Cycle, One External Wait Cycle)

chanhvinh.com

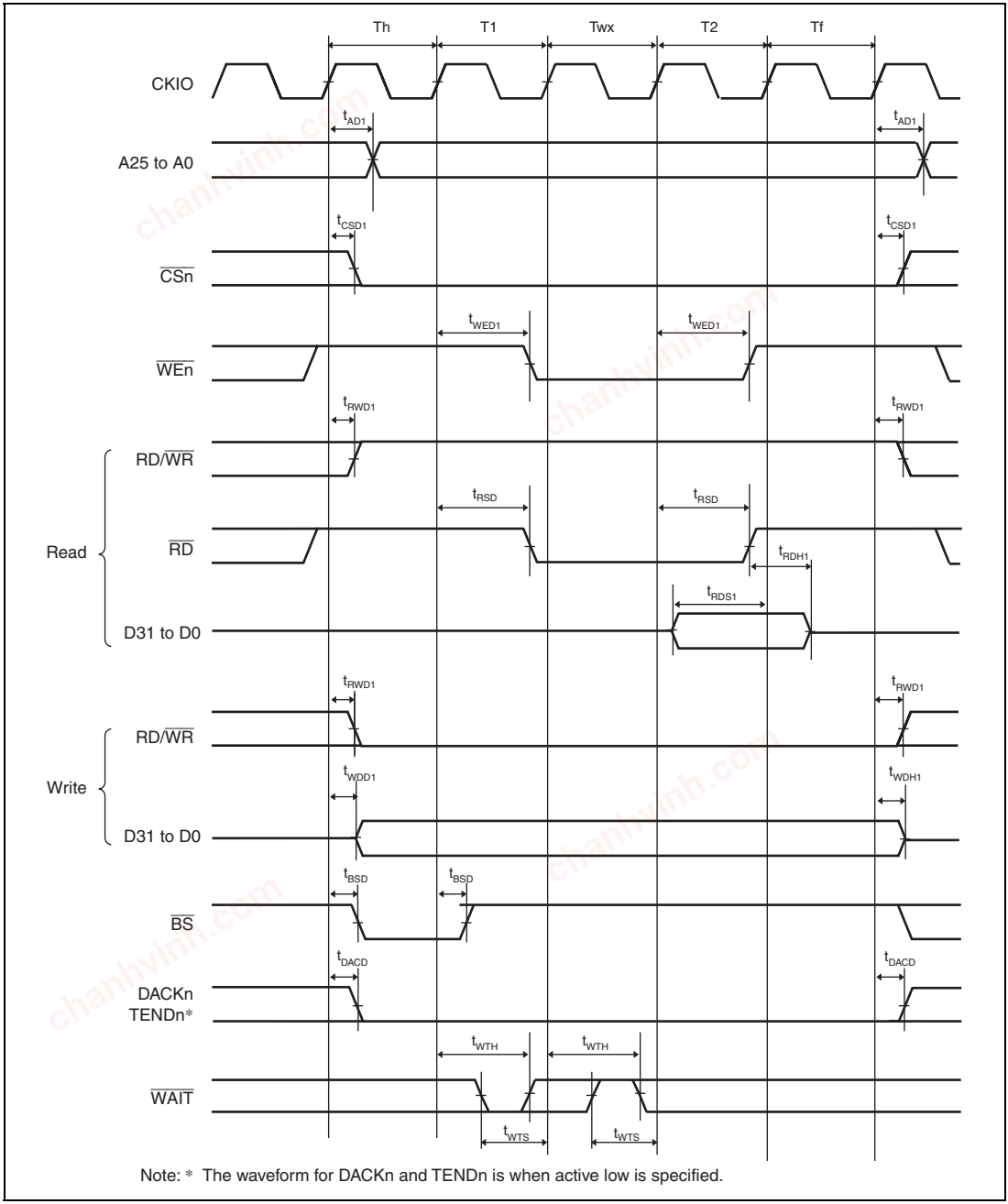

Note: * The waveform for DACKn and TENDn is when active low is specified.

Figure 52.14 Bus Cycle of SRAM with Byte Selection (SW = 1 Cycle, HW = 1 Cycle, One Asynchronous External Wait Cycle, BAS = 0 (Write Cycle UB/LB Control))

chanhvinh.com

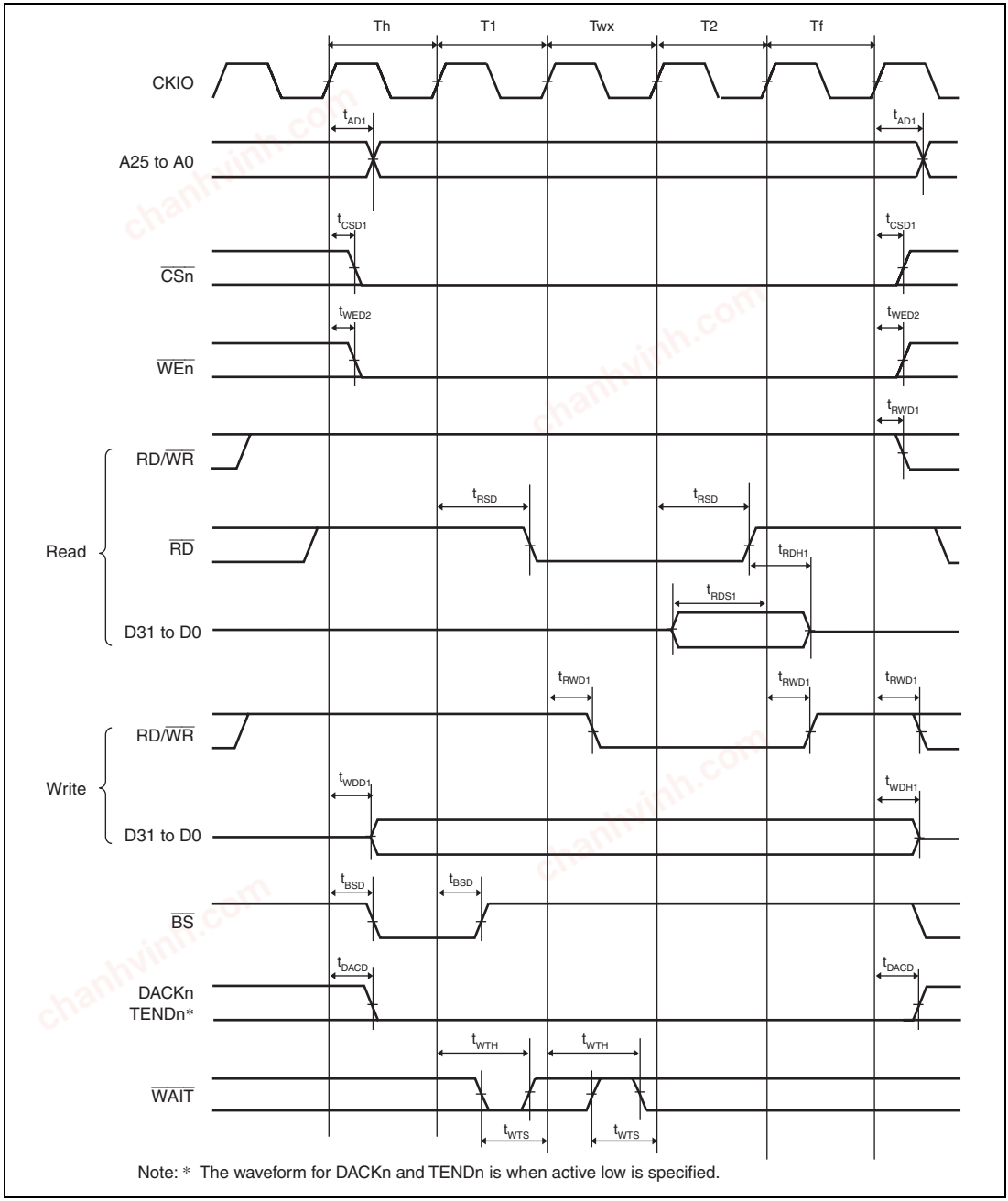

Note: * The waveform for DACKn and TENDn is when active low is specified.

Figure 52.15 Bus Cycle of SRAM with Byte Selection (SW = 1 Cycle, HW = 1 Cycle, One Asynchronous External Wait Cycle, BAS = 1 (Write Cycle WE Control))

chanhvinh.com

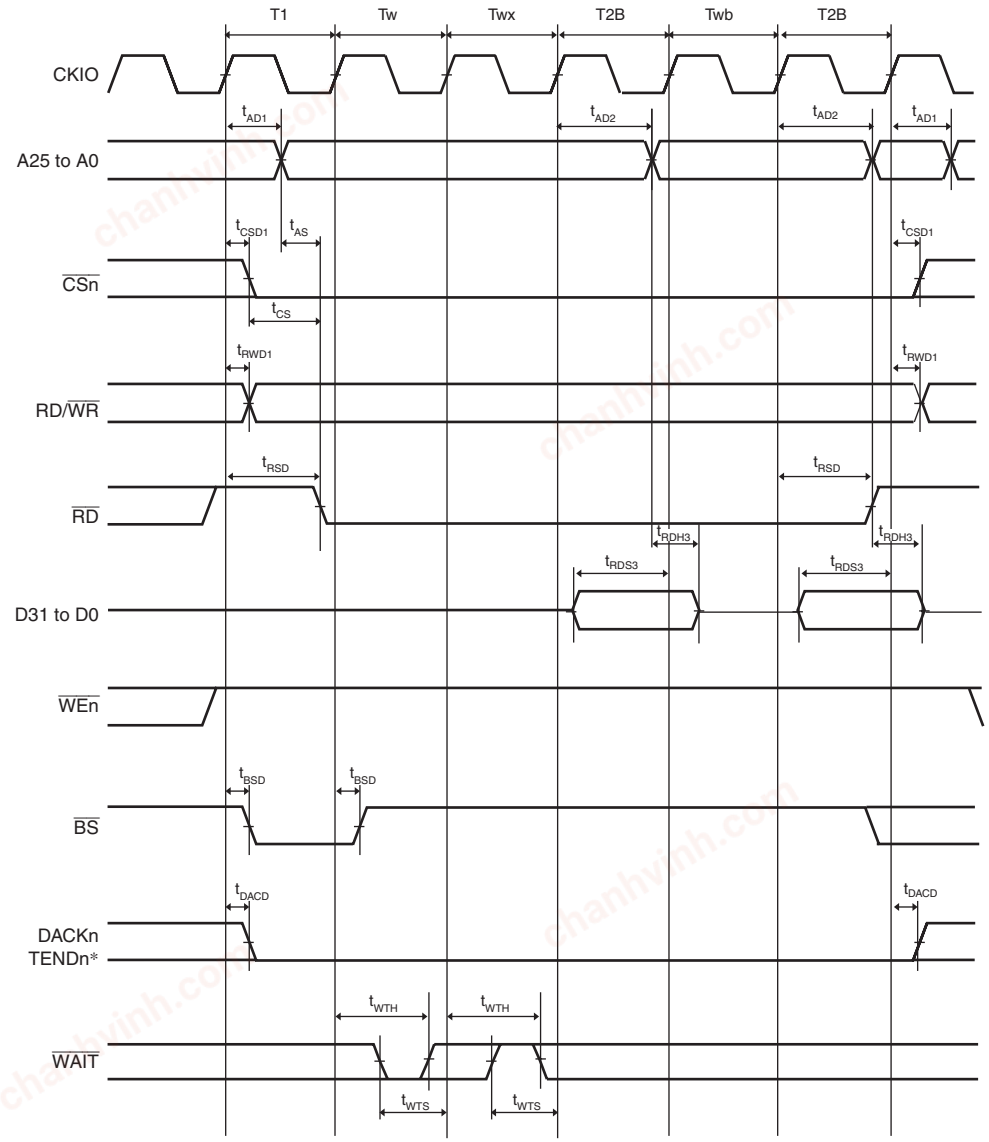

Note: * The waveform for DACKn and TENDn is when active low is specified.

Figure 52.16 Burst ROM Read Cycle
(One Software Wait Cycle, One Asynchronous External Burst Wait Cycle, Two Burst)

chanhvinh.com

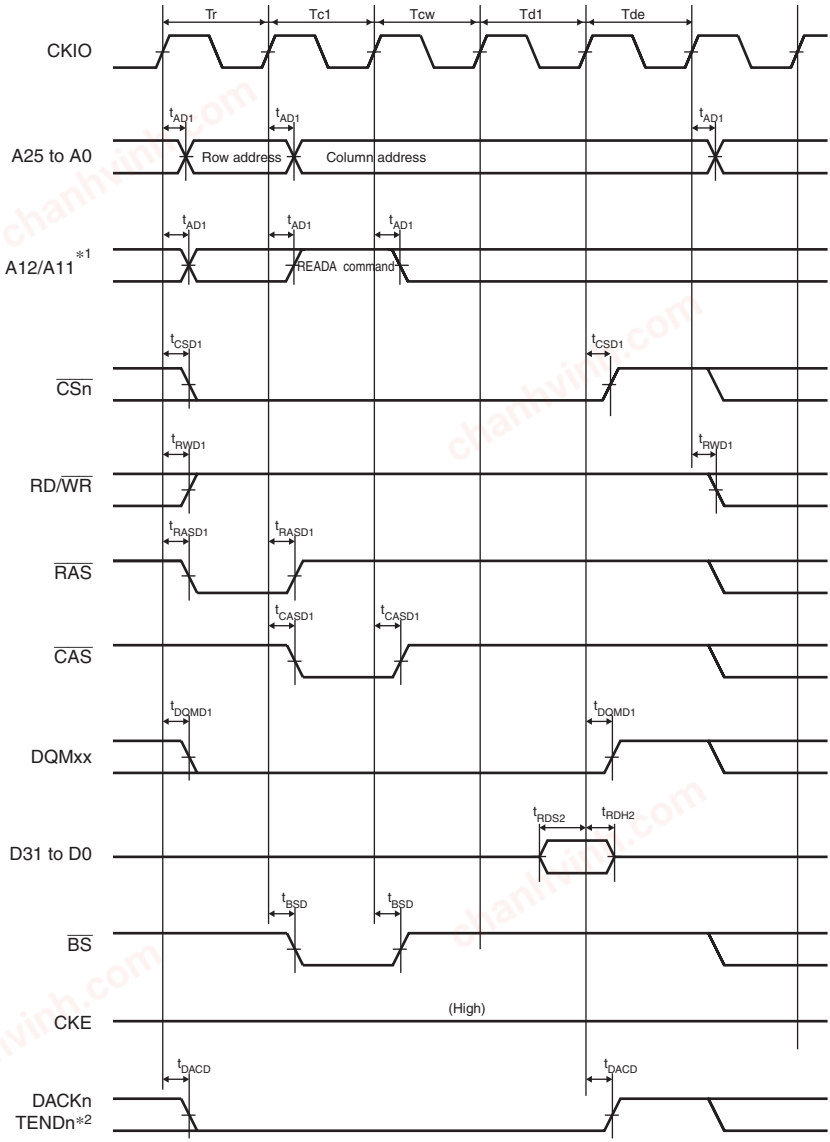

Notes: 1. An address pin to be connected to pin A10 of SDRAM.
2. The waveform for DACKn and TENDn is when active low is specified.

Figure 52.17 Synchronous DRAM Single Read Bus Cycle (Auto Precharge, CAS Latency 2, WTRCD = 0 Cycle, WTRP = 0 Cycle)

chanhvinh.com

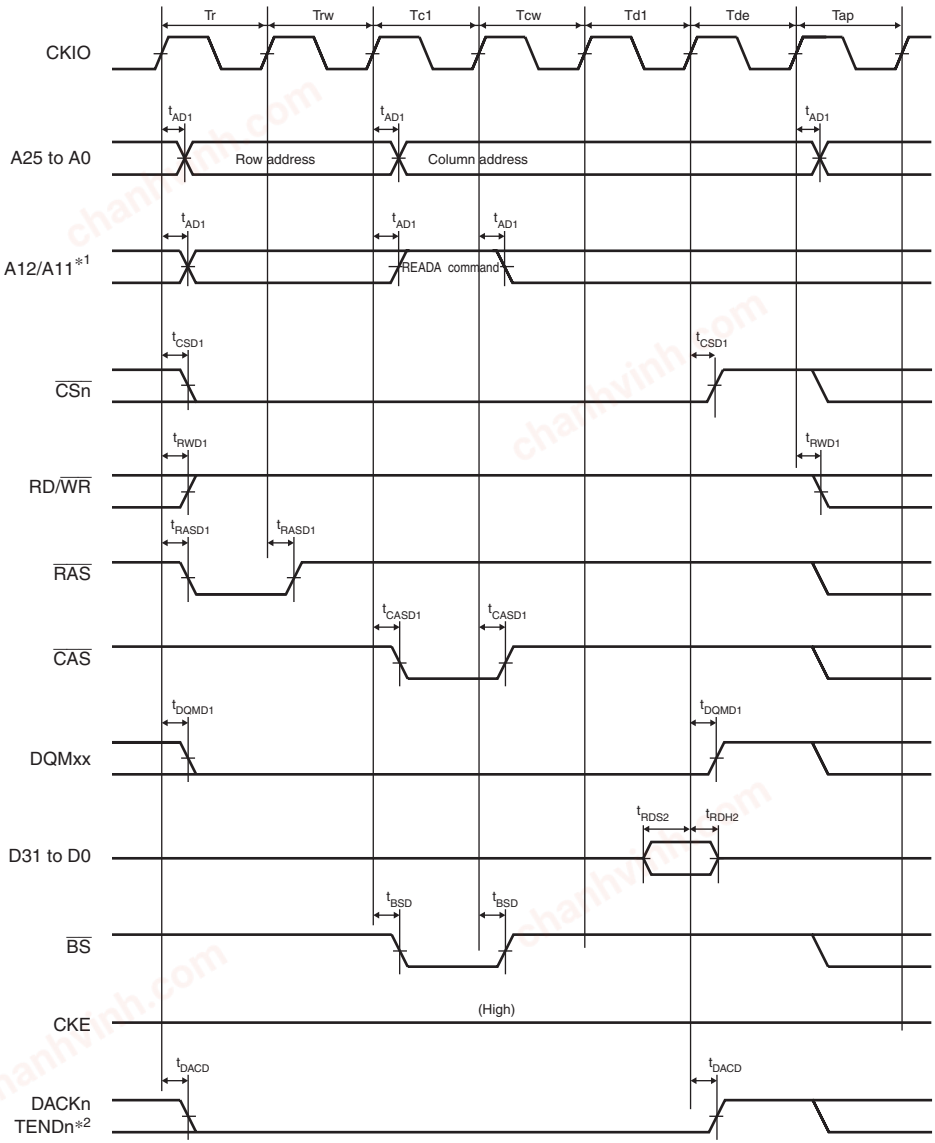

Notes: 1. An address pin to be connected to pin A10 of SDRAM.
2. The waveform for DACKn and TENDn is when active low is specified.

Figure 52.18 Synchronous DRAM Single Read Bus Cycle (Auto Precharge, CAS Latency 2, WTRCD = 1 Cycle, WTRP = 1 Cycle)

chanhvinh.com

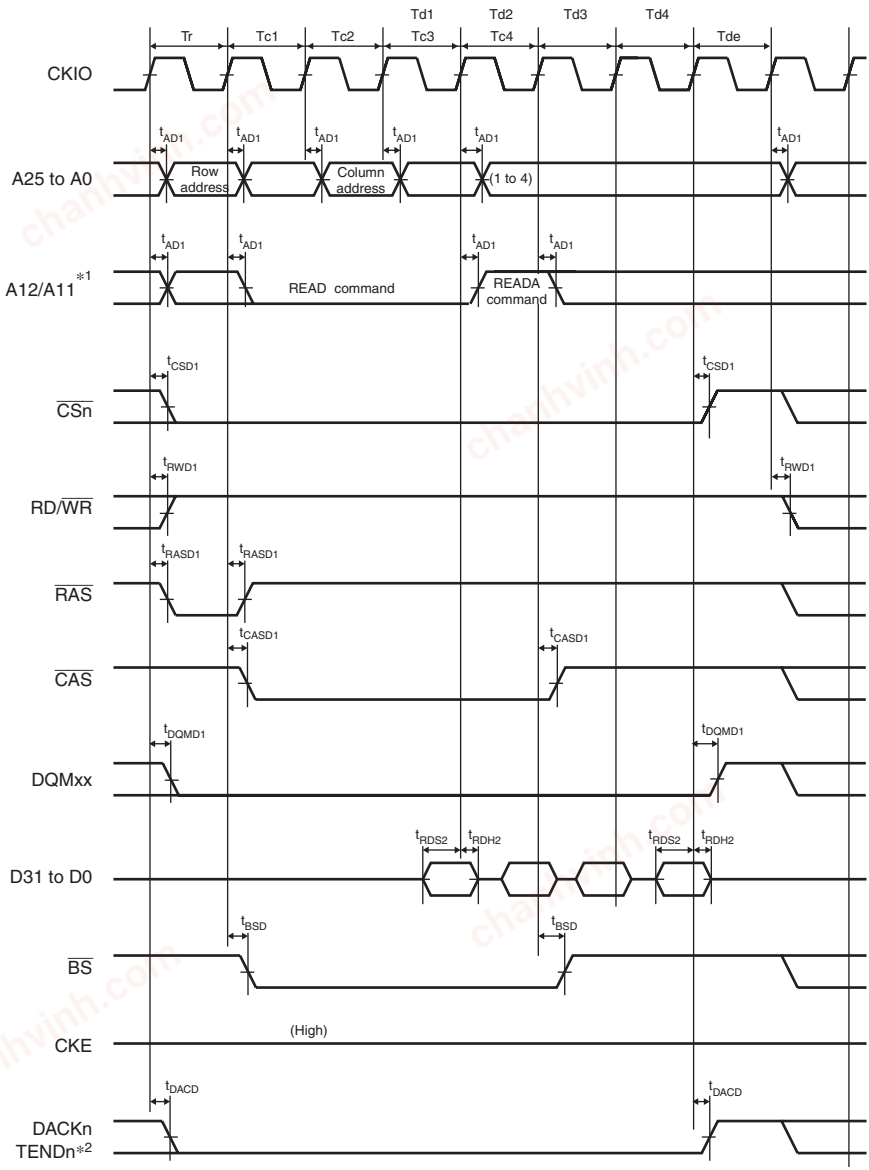

Notes: 1. An address pin to be connected to pin A10 of SDRAM.
2. The waveform for DACKn and TENDn is when active low is specified.

Figure 52.19 Synchronous DRAM Burst Read Bus Cycle (Four Read Cycles) (Auto Precharge, CAS Latency 2, WTRCD = 0 Cycle, WTRP = 1 Cycle)

chanhvinh.com

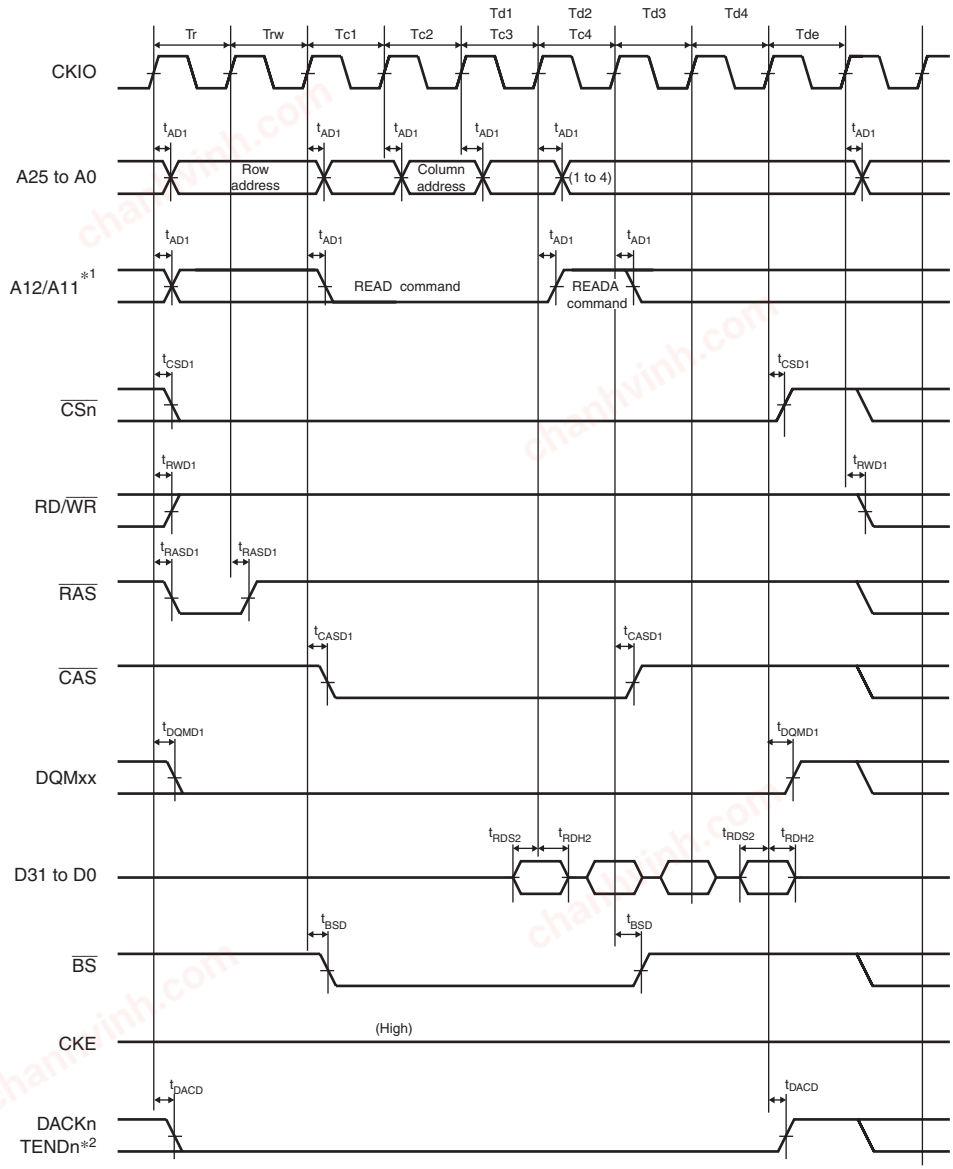

Notes: 1. An address pin to be connected to pin A10 of SDRAM.
2. The waveform for DACKn and TENDn is when active low is specified.

Figure 52.20 Synchronous DRAM Burst Read Bus Cycle (Four Read Cycles) (Auto Precharge, CAS Latency 2, WTRCD = 1 Cycle, WTRP = 0 Cycle)

chanhvinh.com

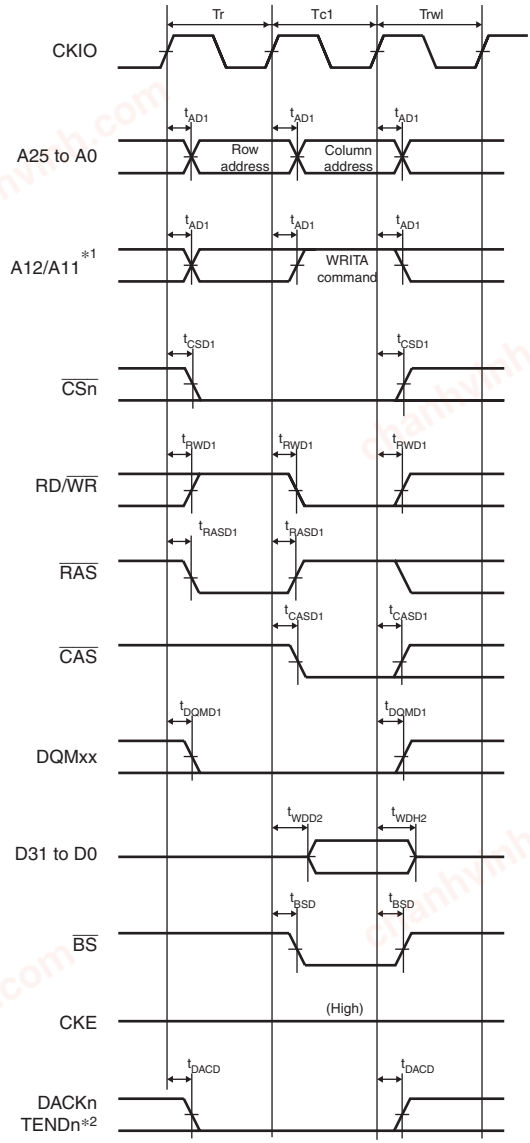

Notes: 1. An address pin to be connected to pin A10 of SDRAM.
2. The waveform for DACKn and TENDn is when active low is specified.

Figure 52.21 Synchronous DRAM Single Write Bus Cycle (Auto Precharge, TRWL = 1 Cycle)

chanhvinh.com

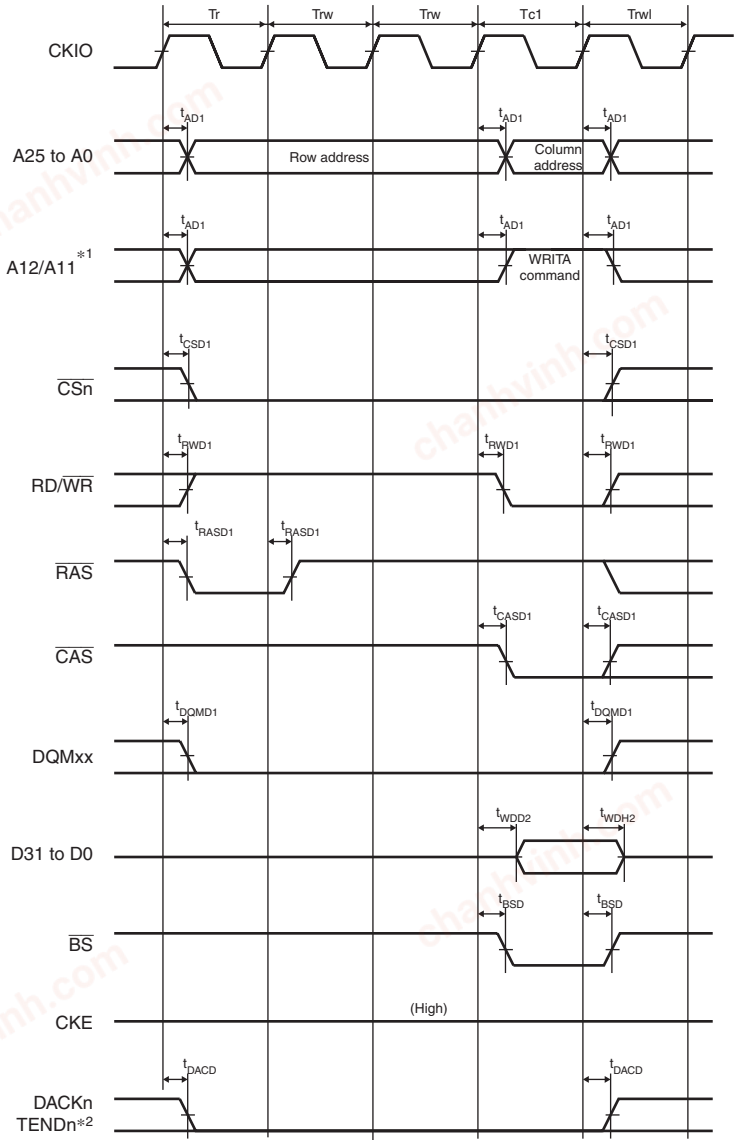

Notes: 1. An address pin to be connected to pin A10 of SDRAM.
2. The waveform for DACKn and TENDn is when active low is specified.

Figure 52.22 Synchronous DRAM Single Write Bus Cycle (Auto Precharge, WTRCD = 2 Cycles, TRWL = 1 Cycle)

chanhvinh.com

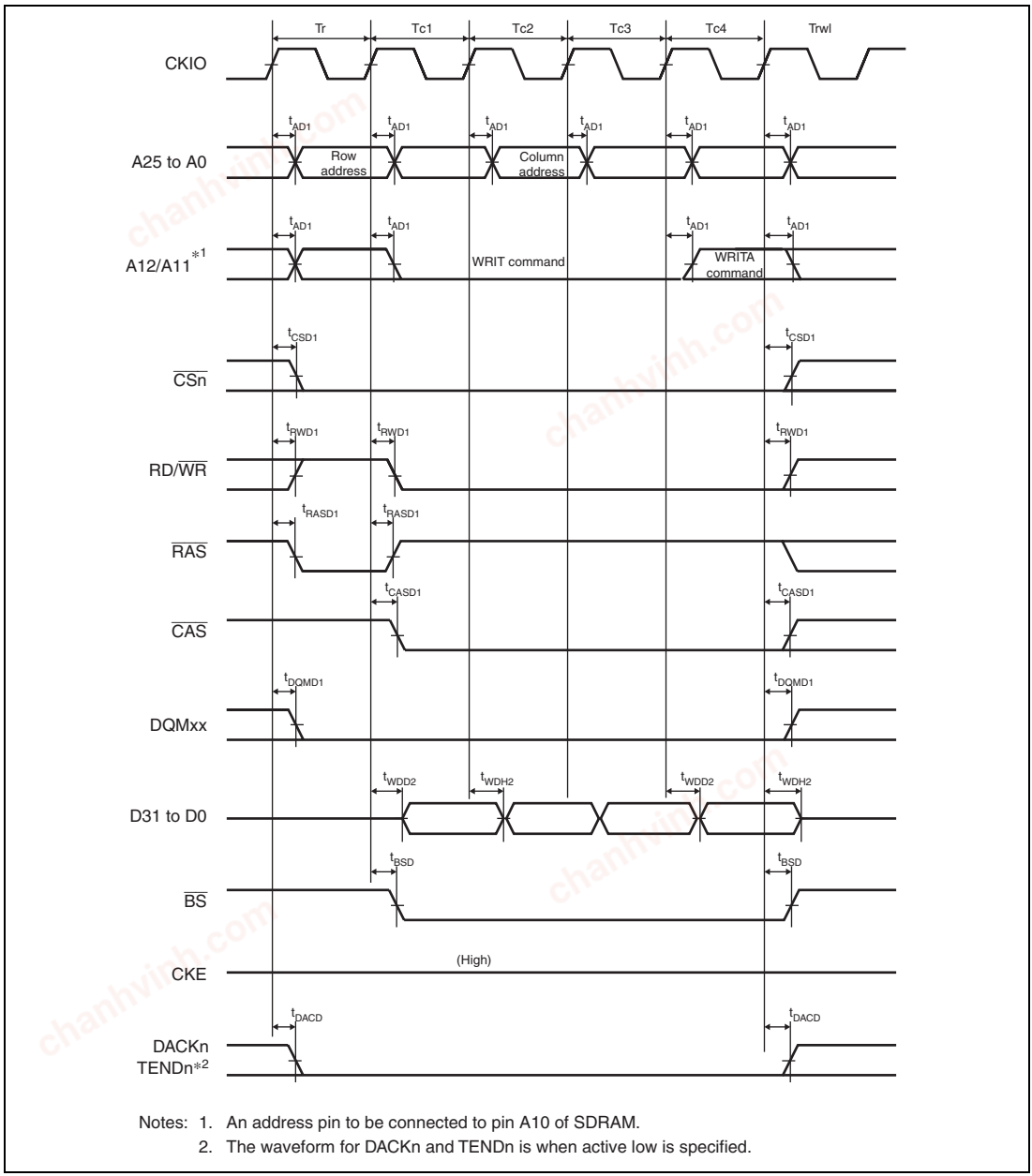

Notes: 1. An address pin to be connected to pin A10 of SDRAM.
2. The waveform for DACKn and TENDn is when active low is specified.

Figure 52.23 Synchronous DRAM Burst Write Bus Cycle (Four Write Cycles) (Auto Precharge, WTRCD = 0 Cycle, TRWL = 1 Cycle)

chanhvinh.com

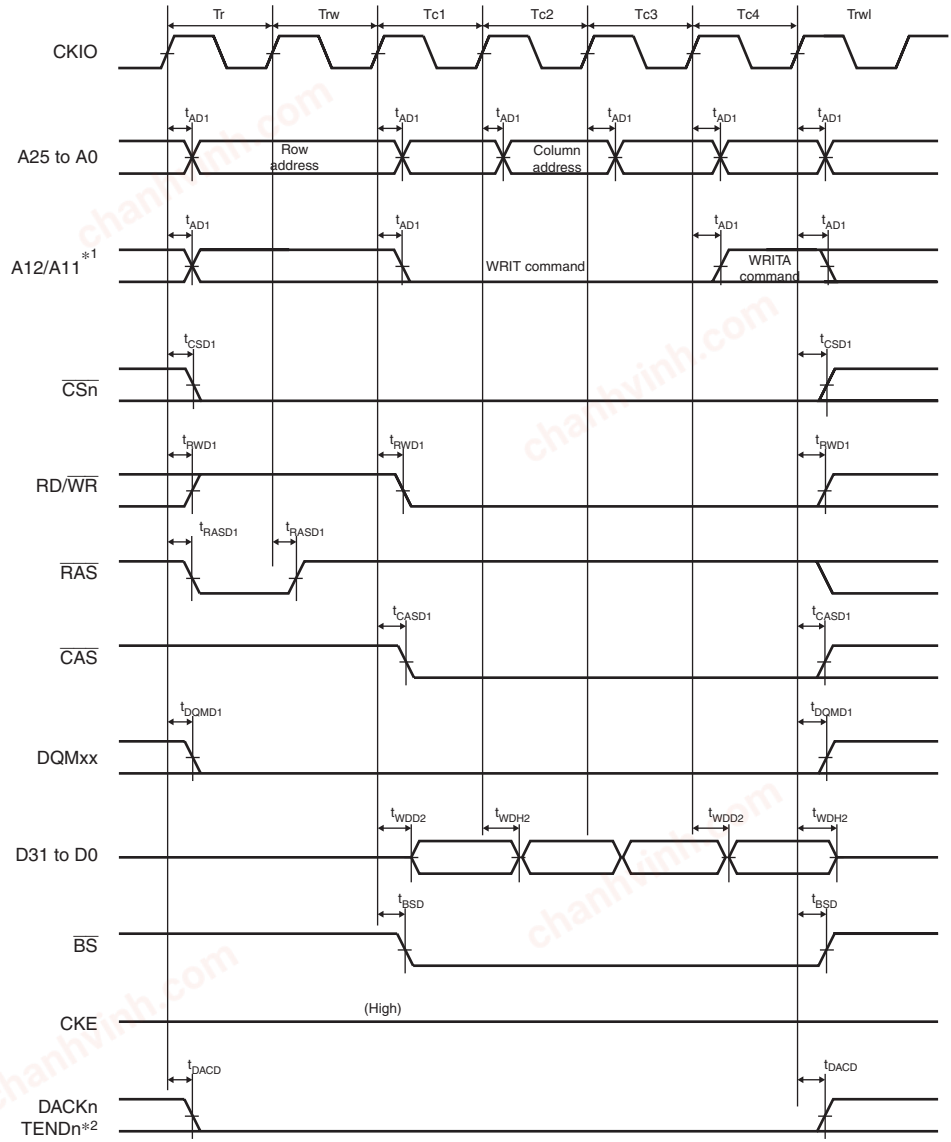

Notes: 1. An address pin to be connected to pin A10 of SDRAM.
2. The waveform for DACKn and TENDn is when active low is specified.

Figure 52.24 Synchronous DRAM Burst Write Bus Cycle (Four Write Cycles) (Auto Precharge, WTRCD = 1 Cycle, TRWL = 1 Cycle)

chanhvinh.com

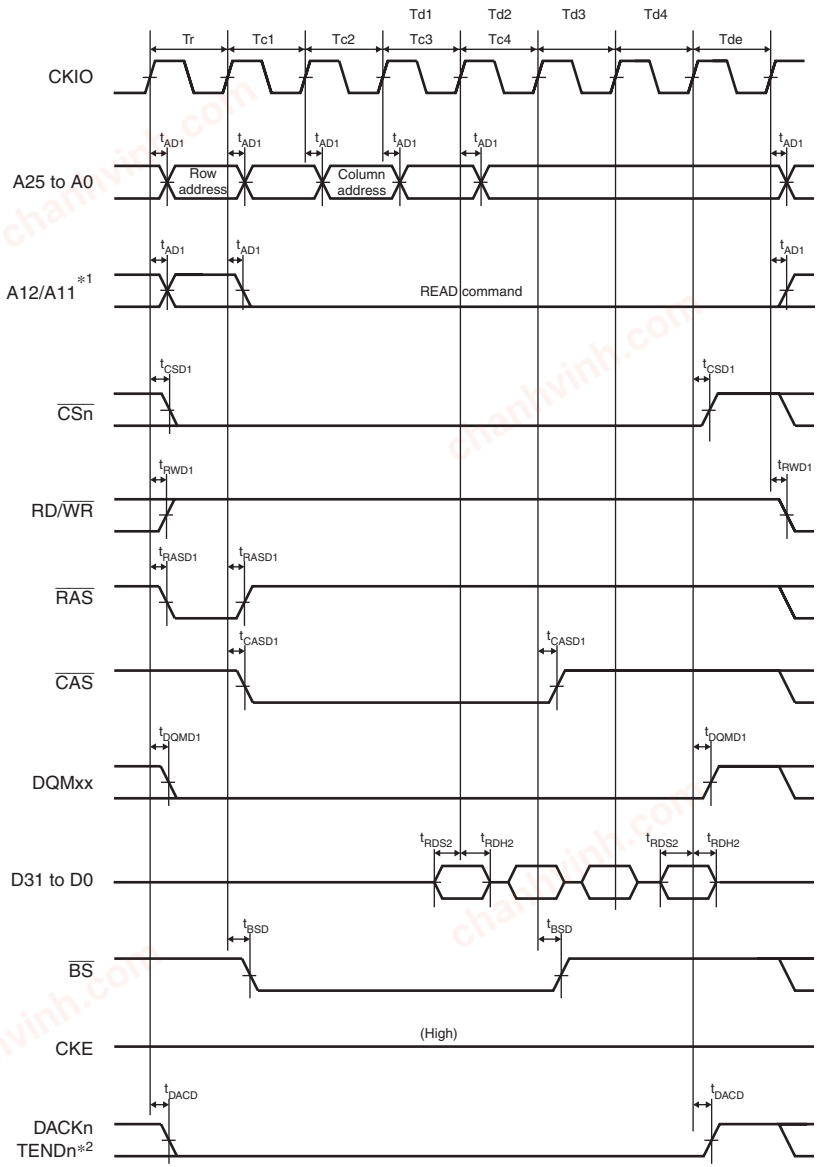

Notes: 1. An address pin to be connected to pin A10 of SDRAM.
2. The waveform for DACKn and TENDn is when active low is specified.

Figure 52.25 Synchronous DRAM Burst Read Bus Cycle (Four Read Cycles)
(Bank Active Mode: ACT + READ Commands, CAS Latency 2, WTRCD = 0 Cycle)

chanhvinh.com

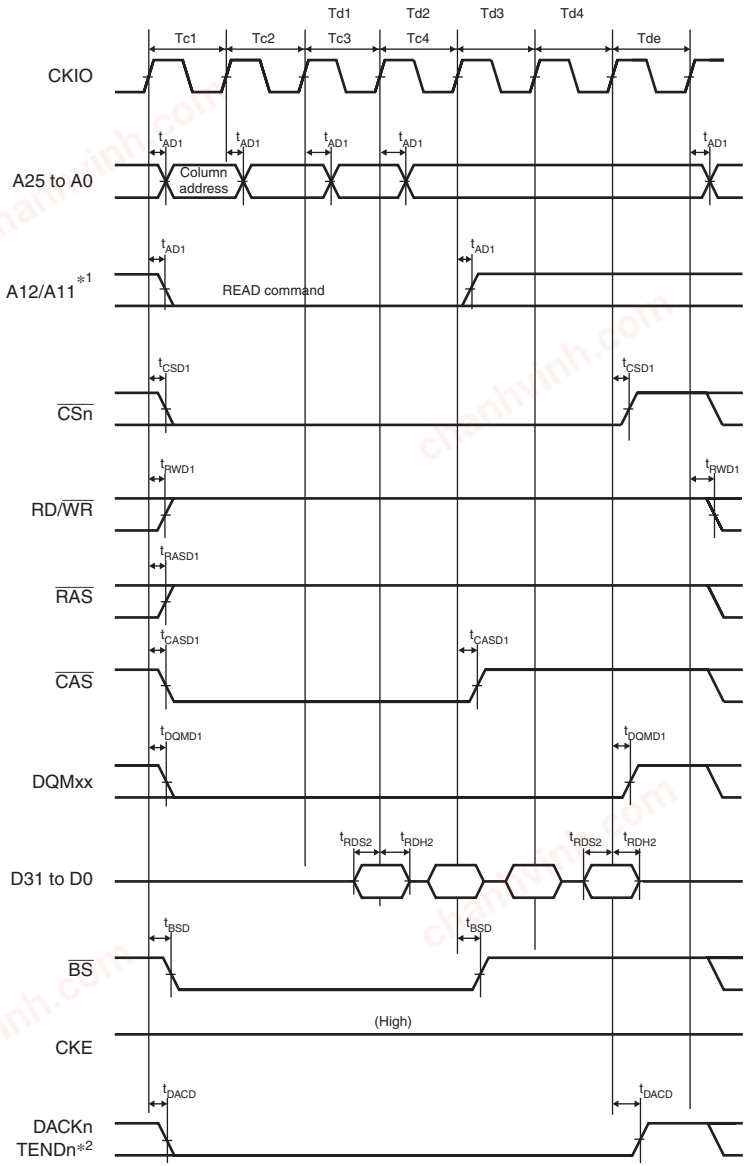

Notes: 1. An address pin to be connected to pin A10 of SDRAM.
2. The waveform for DACKn and TENDn is when active low is specified.

Figure 52.26 Synchronous DRAM Burst Read Bus Cycle (Four Read Cycles)
(Bank Active Mode: READ Command, Same Row Address, CAS Latency 2, WTRCD = 0 Cycle)

chanhvinh.com

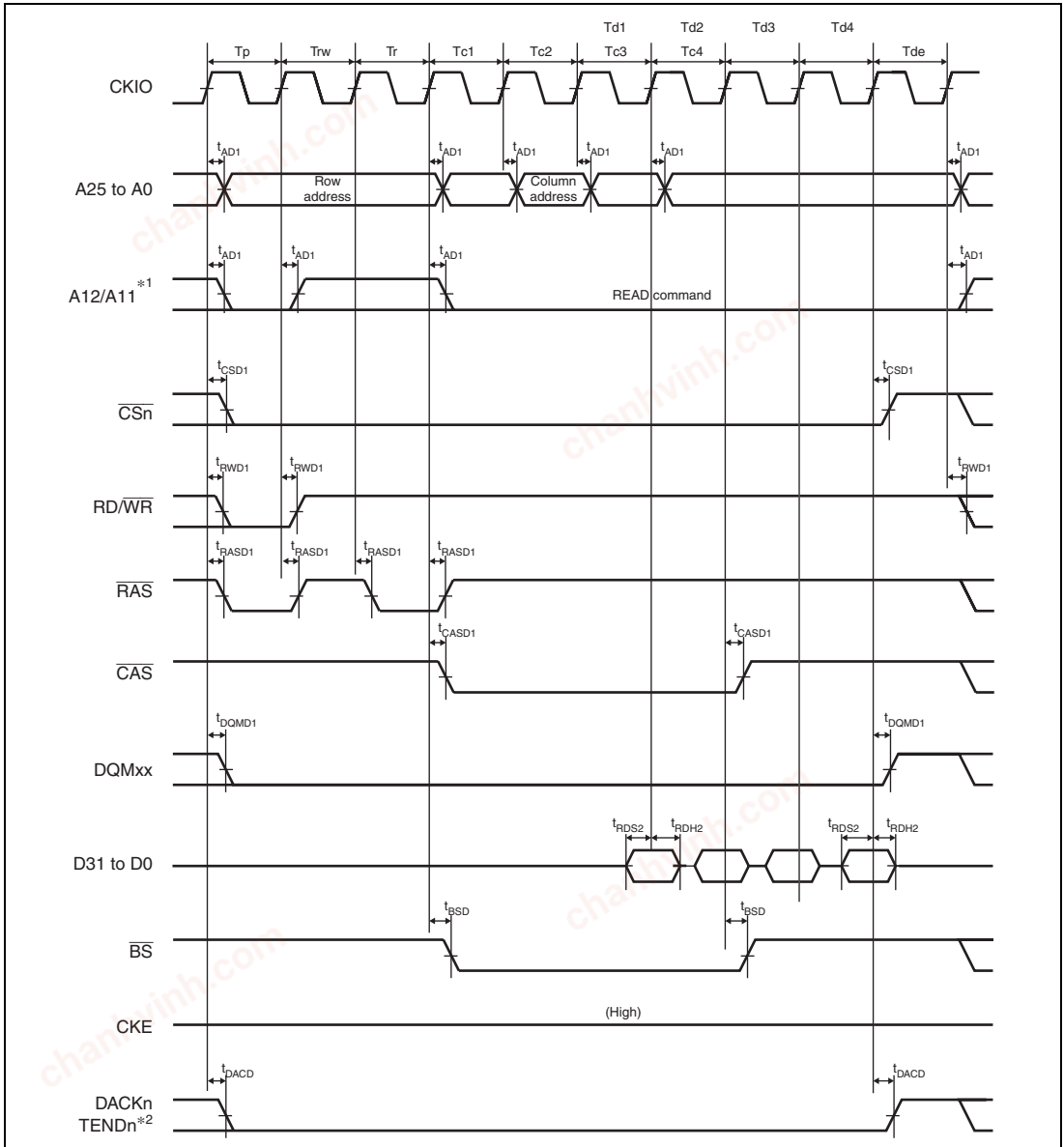

Notes: 1. An address pin to be connected to pin A10 of SDRAM.
2. The waveform for DACKn and TENDn is when active low is specified.

Figure 52.27 Synchronous DRAM Burst Read Bus Cycle (Four Read Cycles) (Bank Active Mode: PRE + ACT + READ Commands, Different Row Addresses, CAS Latency 2, WTRCD = 0 Cycle)

chanhvinh.com

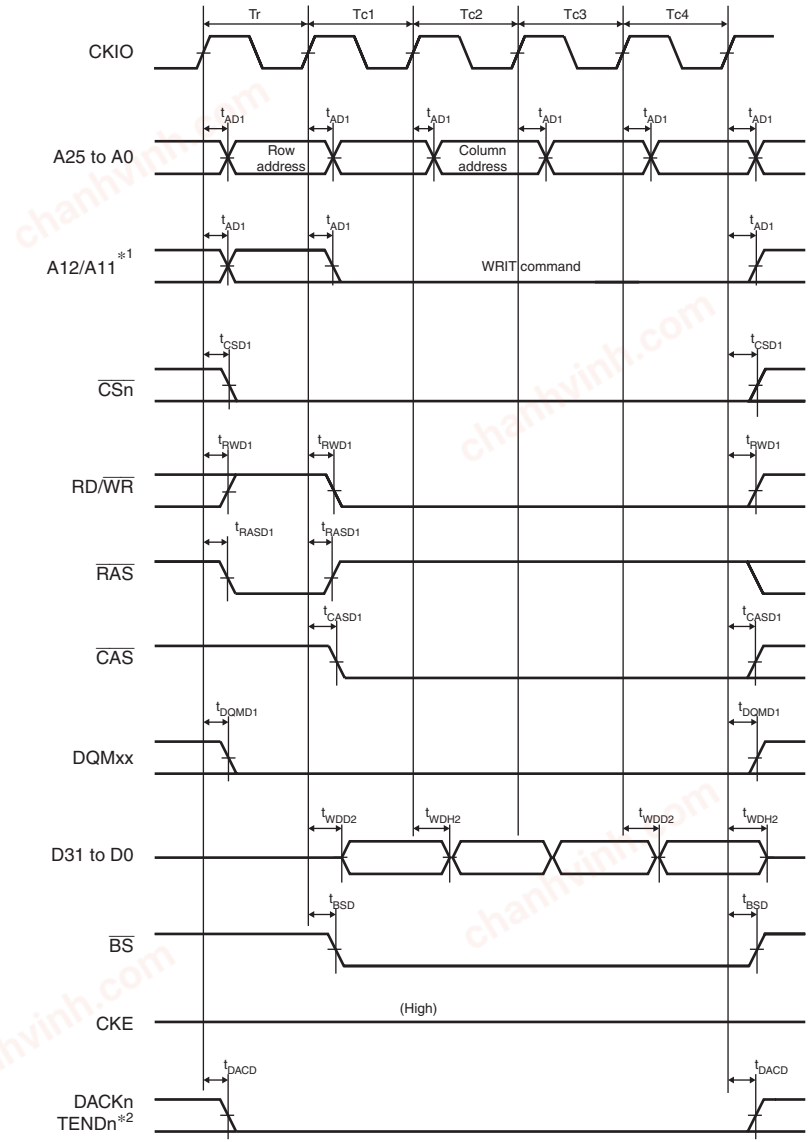

Notes: 1. An address pin to be connected to pin A10 of SDRAM.
2. The waveform for DACKn and TENDn is when active low is specified.

Figure 52.28 Synchronous DRAM Burst Write Bus Cycle (Four Write Cycles)
(Bank Active Mode: ACT + WRITE Commands, WTRCD = 0 Cycle, TRWL = 0 Cycle)

chanhvinh.com

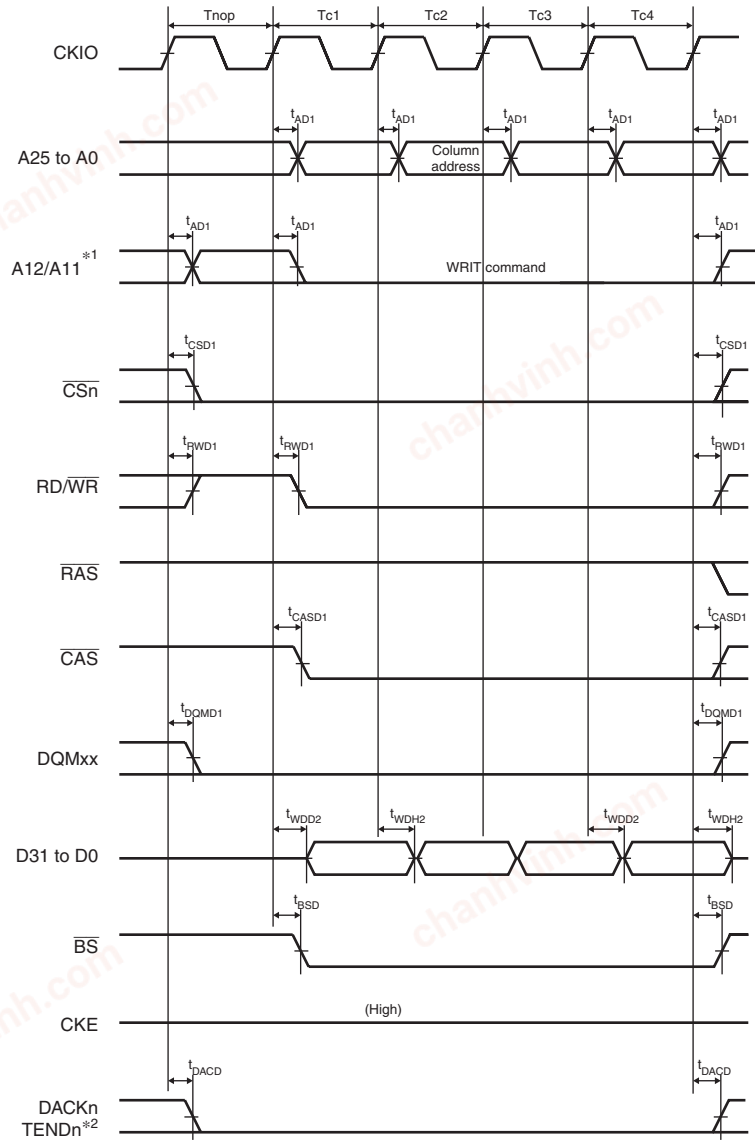

Notes: 1. An address pin to be connected to pin A10 of SDRAM.
2. The waveform for DACKn and TENDn is when active low is specified.

Figure 52.29 Synchronous DRAM Burst Write Bus Cycle (Four Write Cycles) (Bank Active Mode: WRITE Command, Same Row Address, WTRCD = 0 Cycle, TRWL = 0 Cycle)

chanhvinh.com

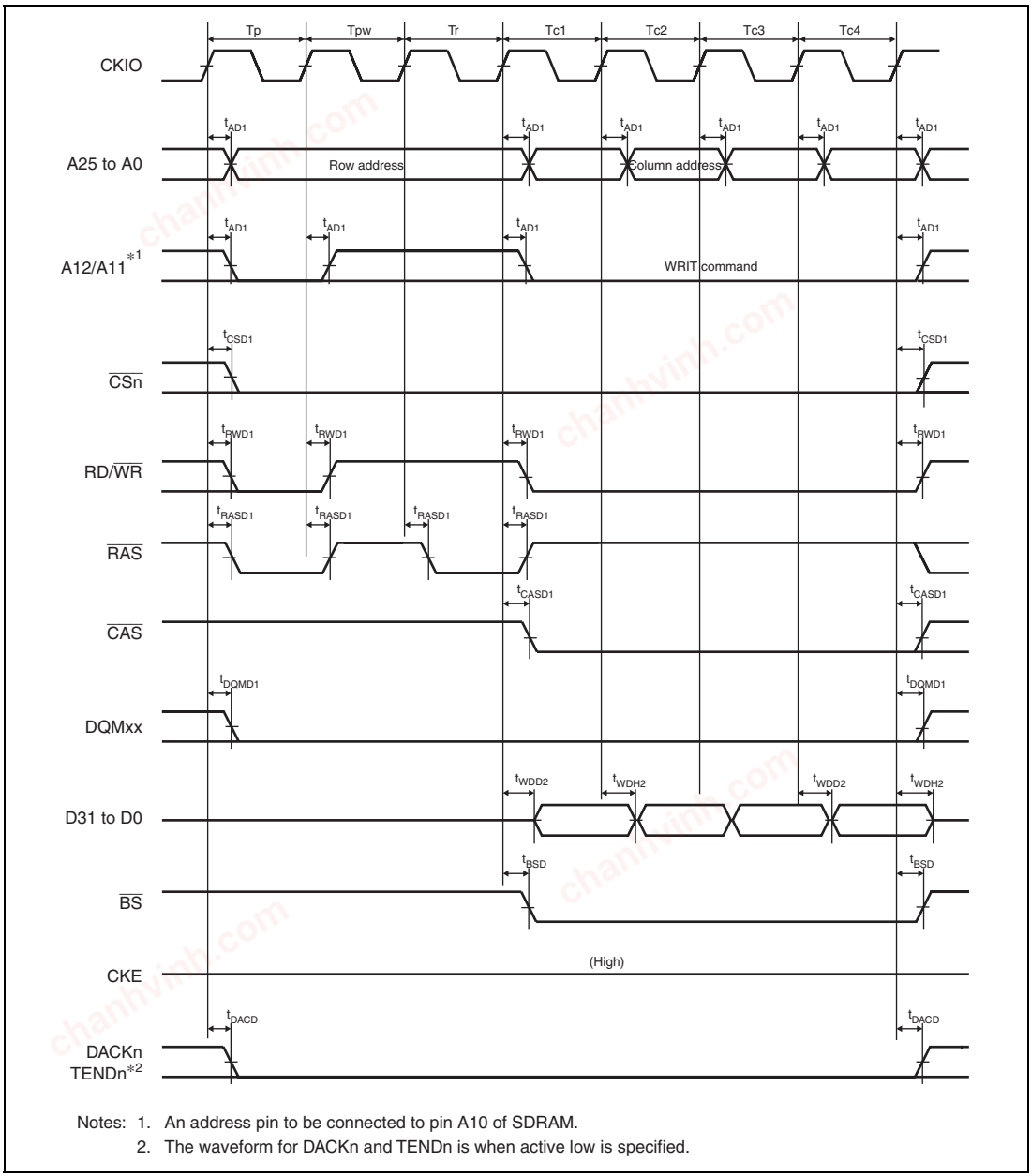

Notes: 1. An address pin to be connected to pin A10 of SDRAM.
2. The waveform for DACKn and TENDn is when active low is specified.

Figure 52.30 Synchronous DRAM Burst Write Bus Cycle (Four Write Cycles) (Bank Active Mode: PRE + ACT + WRITE Commands, Different Row Addresses, WTRCD = 0 Cycle, TRWL = 0 Cycle)

chanhvinh.com

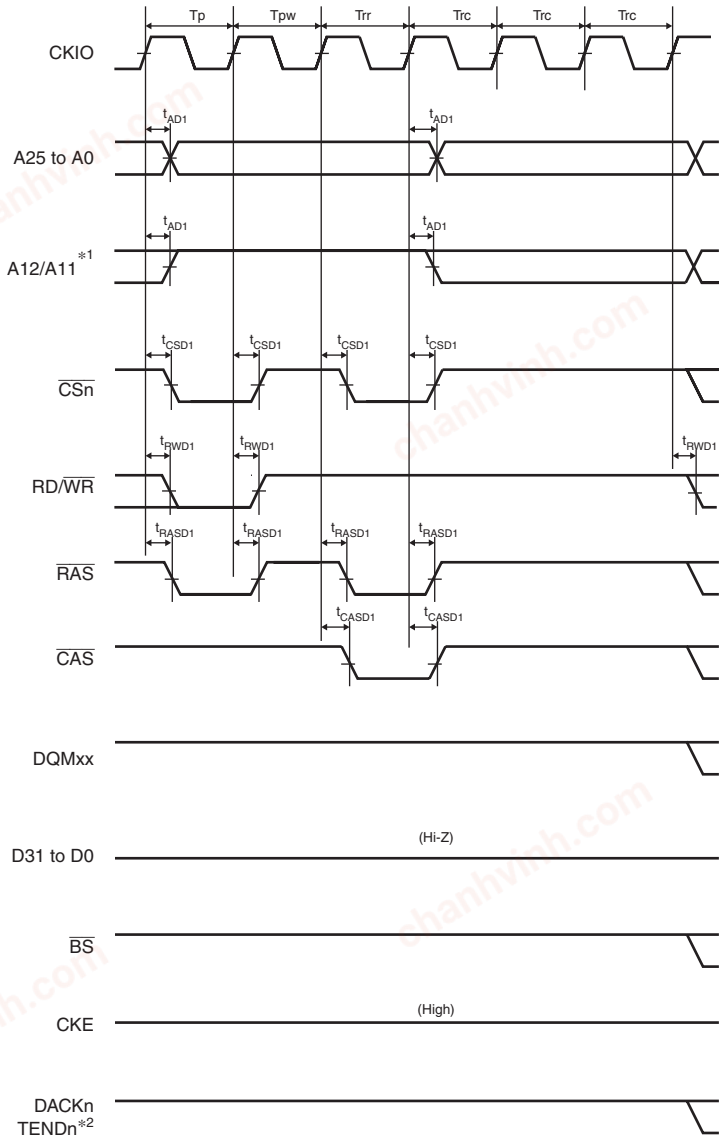

Notes: 1. An address pin to be connected to pin A10 of SDRAM.
2. The waveform for DACKn and TENDn is when active low is specified.

Figure 52.31 Synchronous DRAM Auto-Refreshing Timing (WTRP = 1 Cycle, WTRC = 3 Cycles)

chanhvinh.com

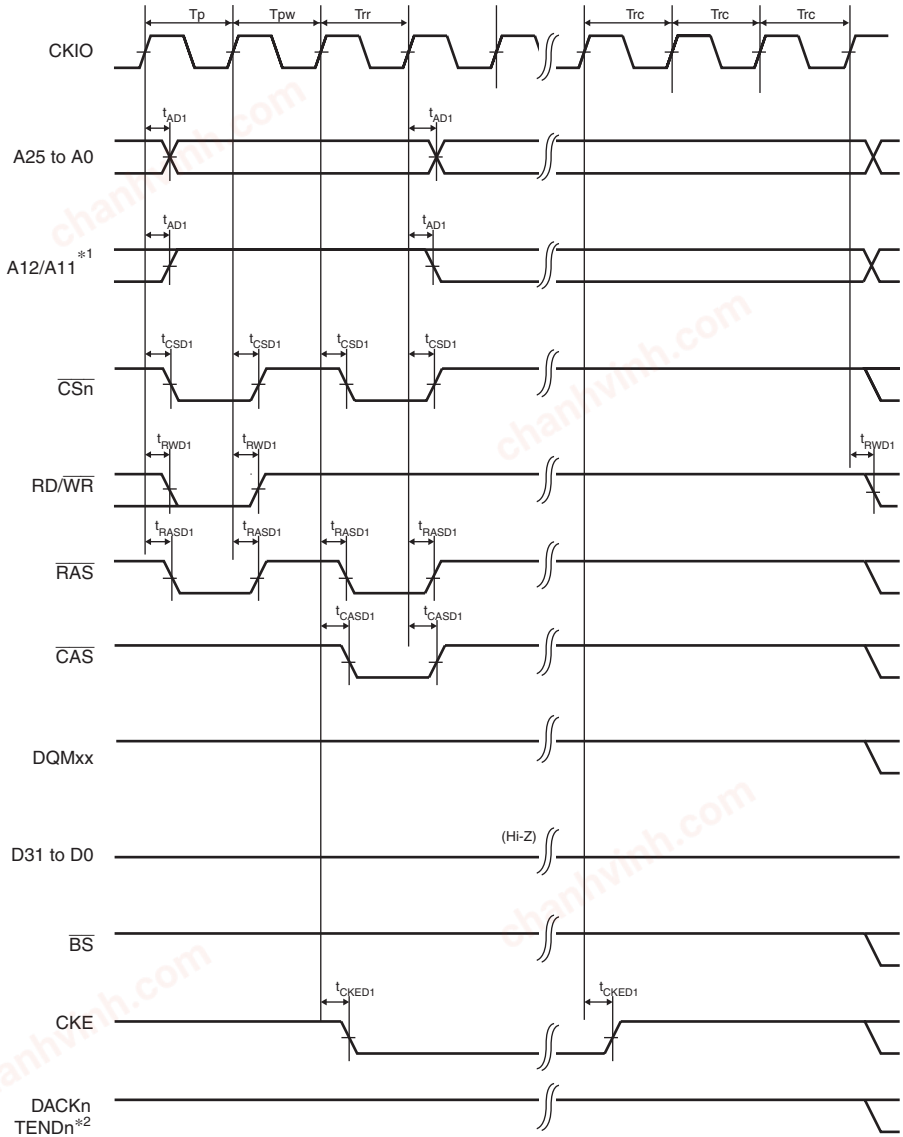

Notes: 1. An address pin to be connected to pin A10 of SDRAM.
2. The waveform for DACKn and TENDn is when active low is specified.

Figure 52.32 Synchronous DRAM Self-Refreshing Timing (WTRP = 1 Cycle)

chanhvinh.com

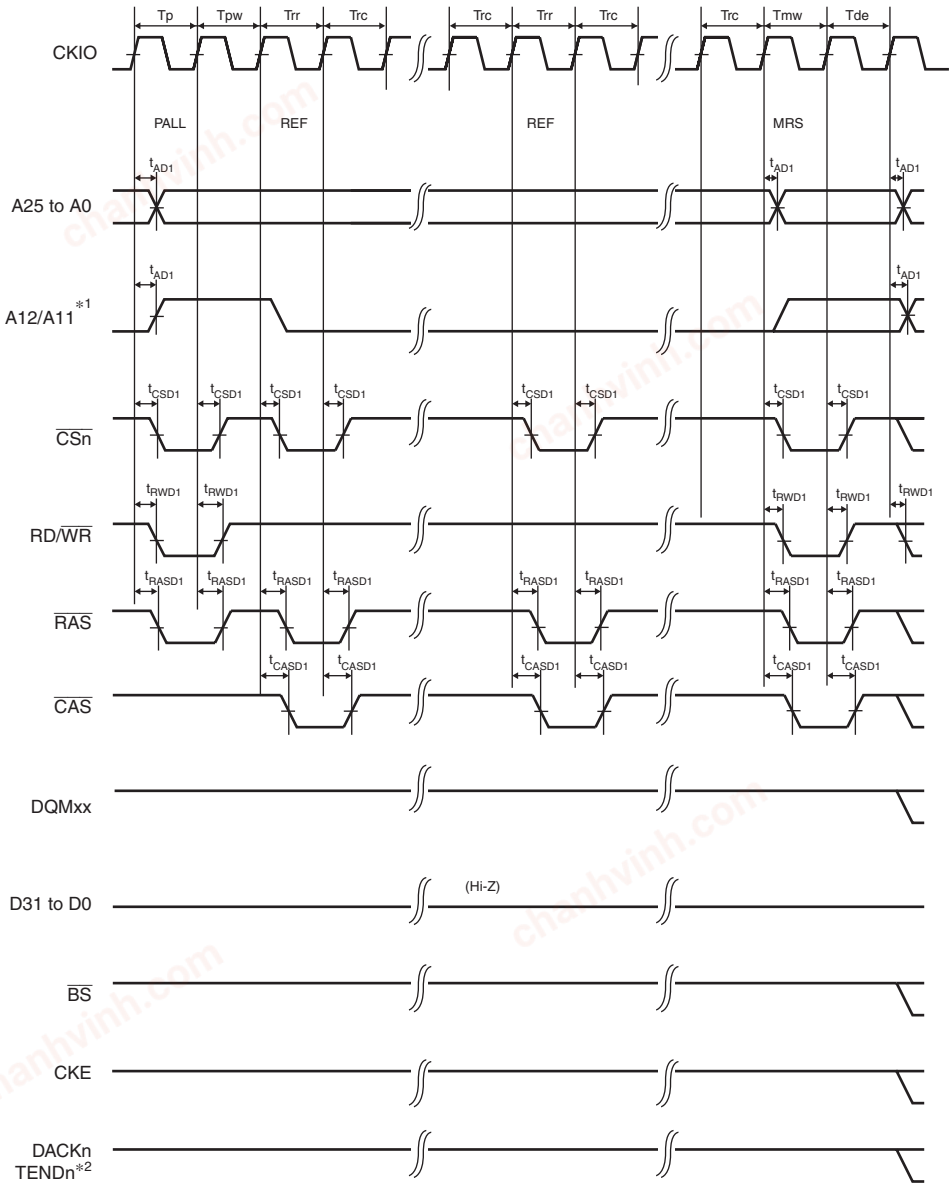

Notes: 1. An address pin to be connected to pin A10 of SDRAM.
2. The waveform for DACKn and TENDn is when active low is specified.

Figure 52.33 Synchronous DRAM Mode Register Write Timing (WTRP = 1 Cycle)

chanhvinh.com

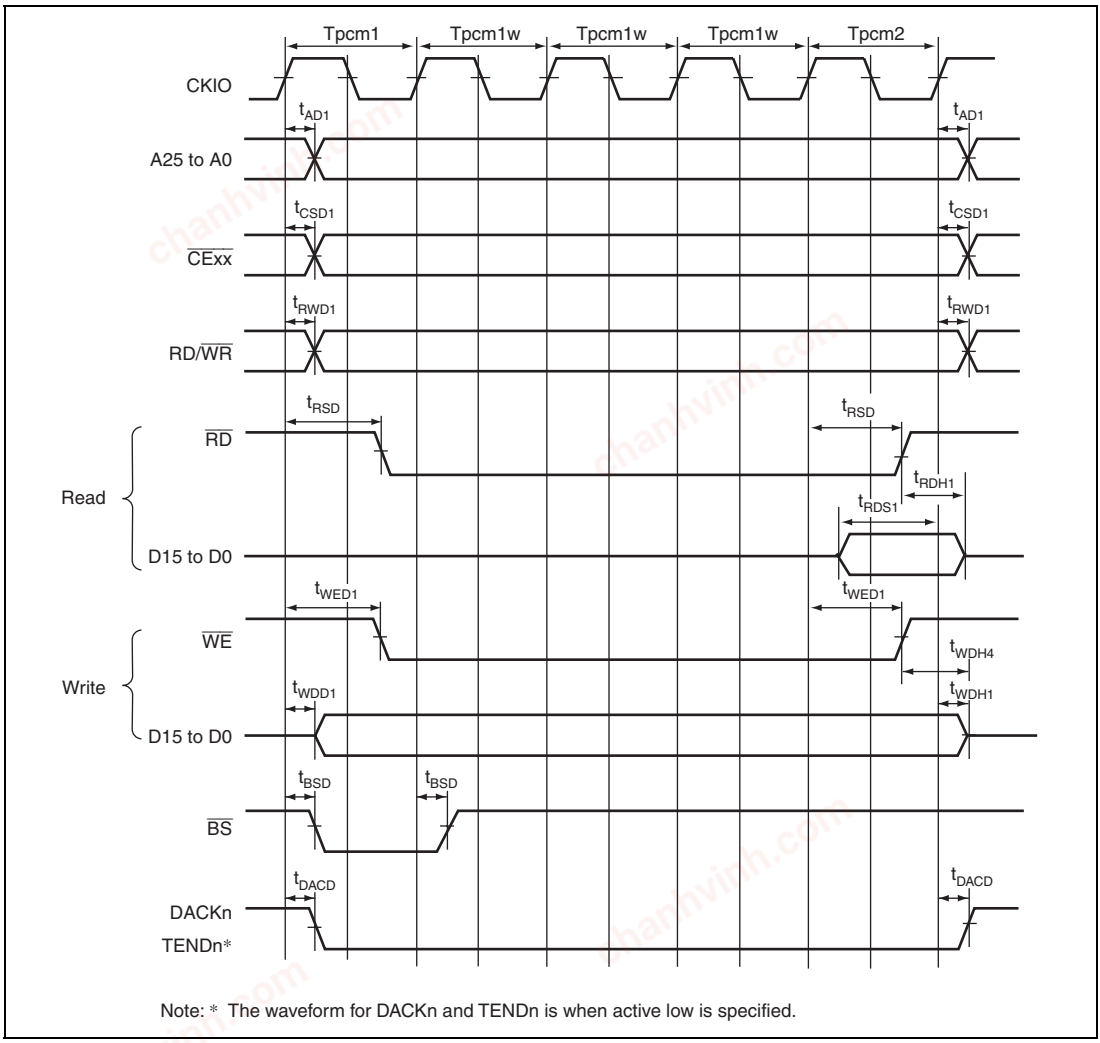

Note: * The waveform for DACKn and TENDn is when active low is specified.

Figure 52.34 PCMCIA Memory Card Bus Cycle (TED = 0 Cycle, TEH = 0 Cycle, No Wait)

chanhvinh.com

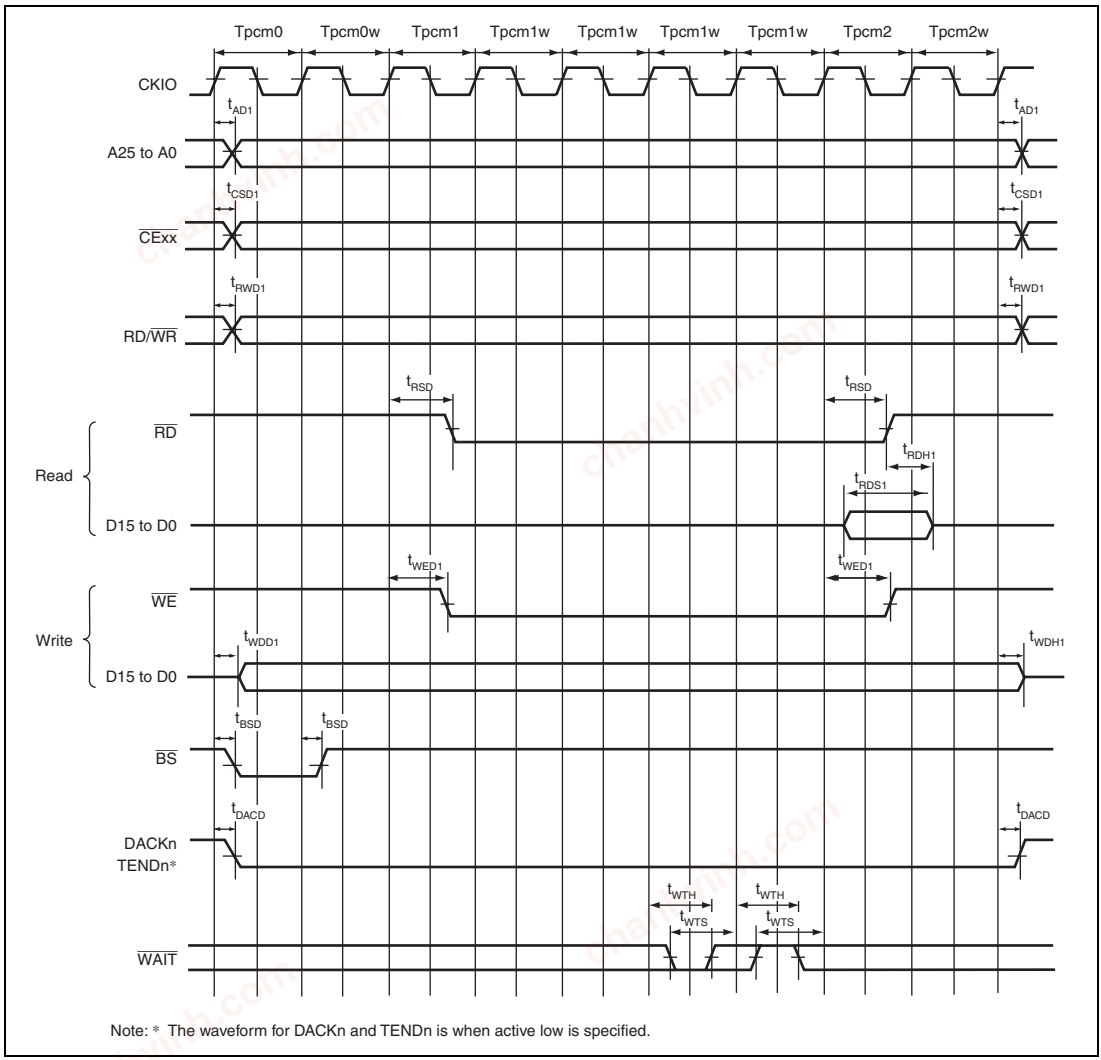

Note: * The waveform for DACKn and TENDn is when active low is specified.

Figure 52.35 PCMCIA Memory Card Bus Cycle
(TED = 2 Cycles, TEH = 1 Cycle, Software Wait Cycle 0, Hardware Wait Cycle 1)

chanhvinh.com

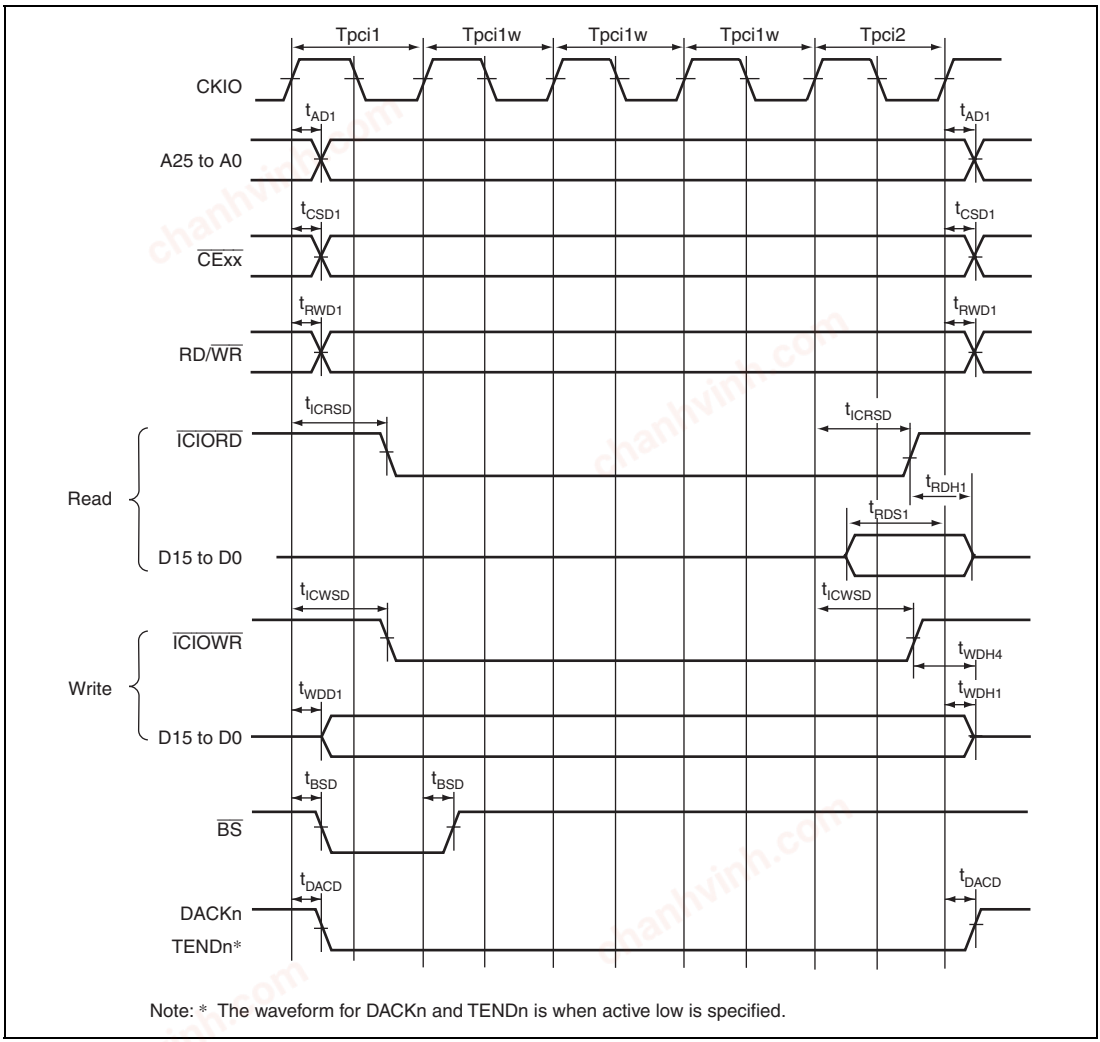

Note: * The waveform for DACKn and TENDn is when active low is specified.

Figure 52.36 PCMCIA I/O Card Bus Cycle (TED = 0 Cycle, TEH = 0 Cycle, No Wait)

chanhvinh.com

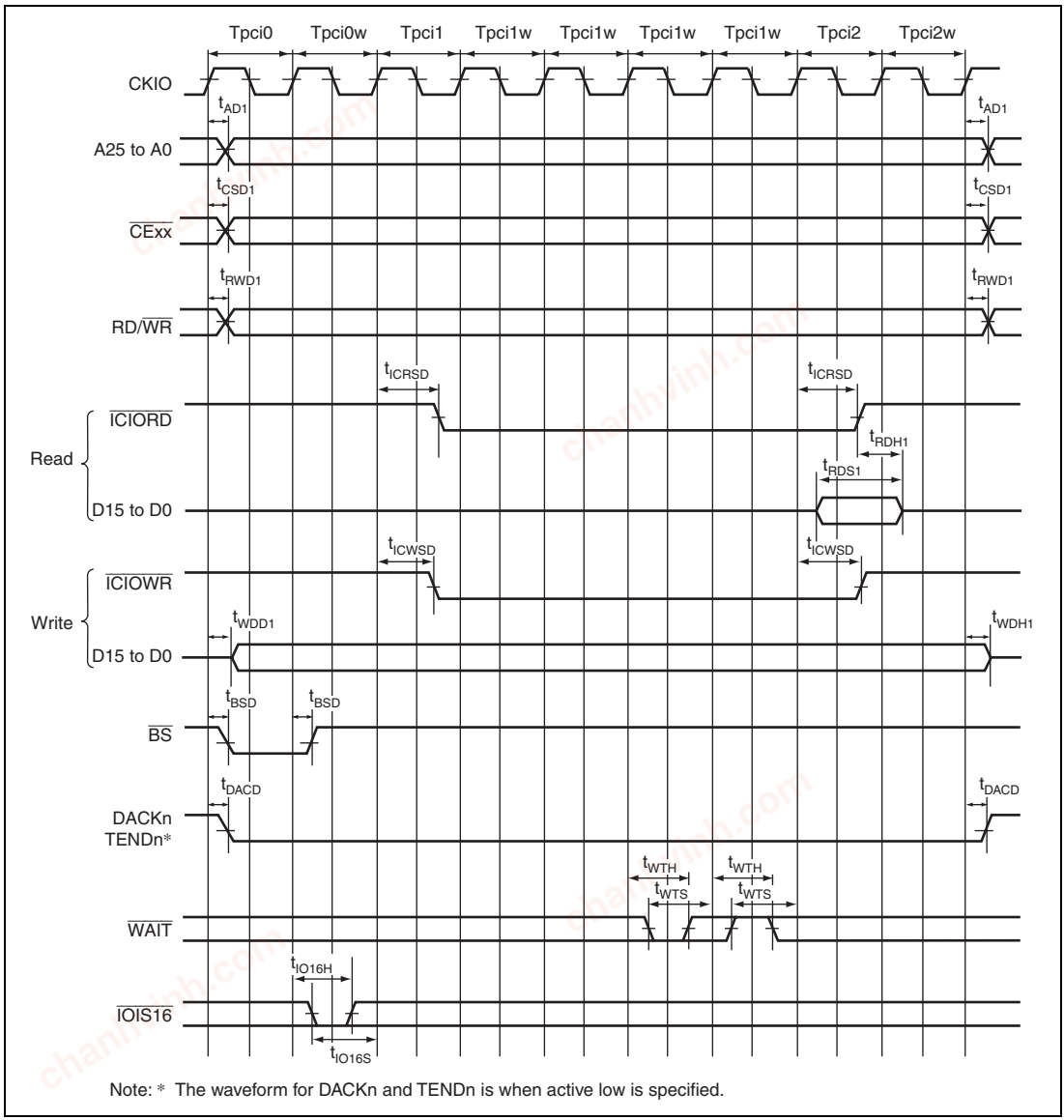

Figure 52.37 PCMCIA I/O Card Bus Cycle
(TED = 2 Cycles, TEH = 1 Cycle, Software Wait Cycle 0, Hardware Wait Cycle 1)

chanhvinh.com

52.4.4 UBC Timing

Table 52.8 UBC Timing

Item	Symbol	Min.	Max.	Unit	Figure
$\overline{\text{UBCTRG}}$ delay time	t_{UBCTGD}	—	14	ns	Figure 52.38

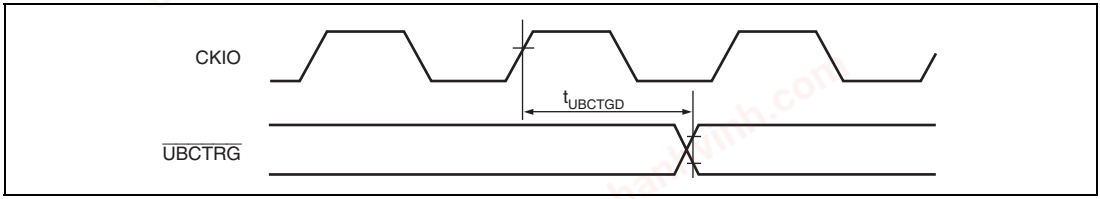

Figure 52.38 UBC Trigger Timing

chanhvinh.com

52.4.5 Direct Memory Access Controller Timing

Table 52.9 Direct Memory Access Controller Timing

Item	Symbol	Min.	Max.	Unit	Figure
DREQ setup time	t_{DRQS}	5.5	—	ns	Figure 52.39
DREQ hold time	t_{DRQH}	2.5	—		
DACK, TEND delay time	t_{DACD}	0	12		Figure 52.40

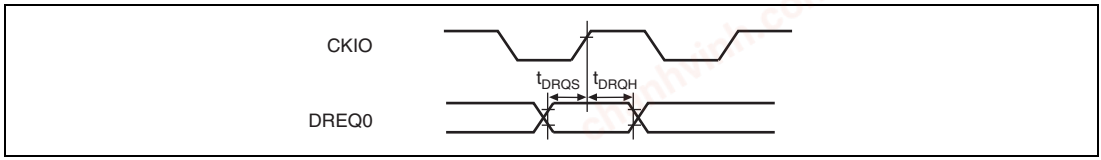

Figure 52.39 DREQ Input Timing

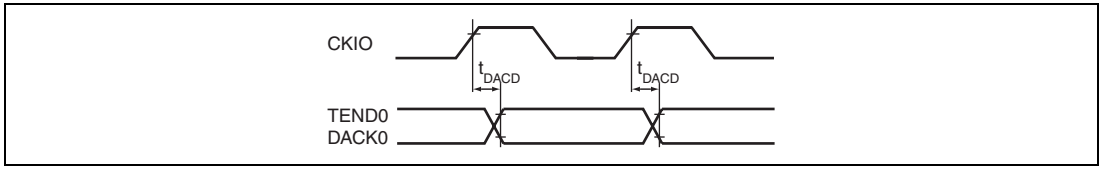

Figure 52.40 DACK, TEND Output Timing

chanhvinh.com

52.4.6 Multi-Function Timer Pulse Unit 2 Timing

Table 52.10 Multi-Function Timer Pulse Unit 2 Timing

Item	Symbol	Min.	Max.	Unit	Figure
Timer clock pulse width (single edge)	$t_{TCKWH/L}$	1.5	—	t_{p0cyc}	Figure 52.41
Timer clock pulse width (both edges)	$t_{TCKWH/L}$	2.5	—	t_{p0cyc}	
Timer clock pulse width (phase counting mode)	$t_{TCKWH/L}$	2.5	—	t_{p0cyc}	

Note: t_{p0cyc} indicates peripheral clock (P0ϕ) cycle.

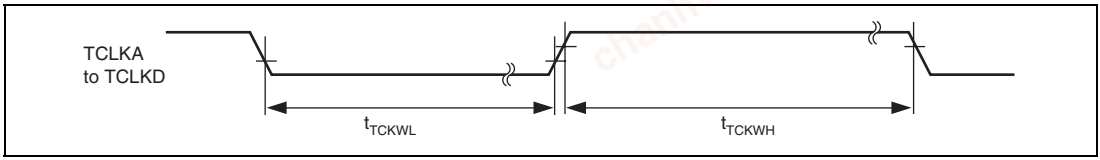

Figure 52.41 Clock Input Timing

chanhvinh.com

52.4.7 Watchdog Timer Timing

Table 52.11 Watchdog Timer Timing

Item	Symbol	Min.	Max.	Unit	Figure
$\overline{\text{WDTOVF}}$ delay time	t_{WOVD}	—	100	ns	Figure 52.42

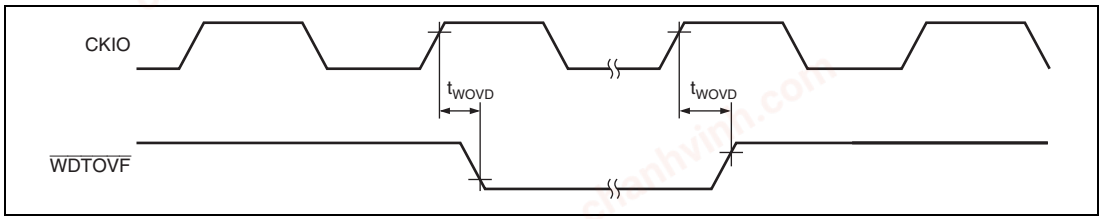

Figure 52.42 $\overline{\text{WDTOVF}}$ Output Timing

chanhvinh.com

52.4.8 Serial Communication Interface with FIFO Timing

Table 52.12 Serial Communication Interface with FIFO Timing

Item		Symbol	Min.	Max.	Unit	Figure
Input clock cycle	(clocked synchronous)	t_{Scyc}	12	—	t_{p1cyc}	Figure 52.43
	(asynchronous)		4	—	t_{p1cyc}	
Input clock rise time		t_{SCKr}	—	1.5	t_{p1cyc}	
Input clock fall time		t_{SCKf}	—	1.5	t_{p1cyc}	
Input clock width		t_{SCKW}	0.4	0.6	t_{Scyc}	
Transmit data delay time (clocked synchronous)		t_{TXD}	—	$3\ t_{p1cyc} + 15$	ns	Figure 52.44
Receive data setup time (clocked synchronous)		t_{RXS}	$4\ t_{p1cyc} + 15$	—	ns	
Receive data hold time (clocked synchronous)		t_{RXH}	$1\ t_{p1cyc} + 15$	—	ns	

Note: t_{p1cyc} indicates the peripheral clock 1 (P1ϕ) cycle.

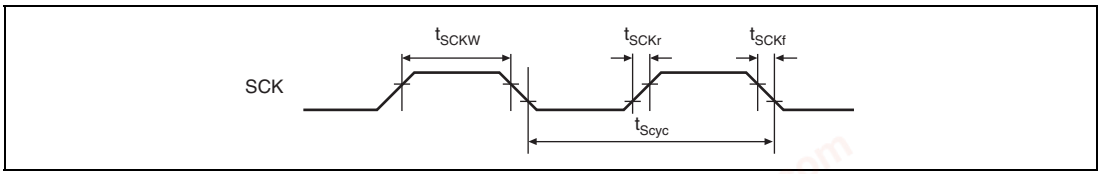

Figure 52.43 SCK Input Clock Timing

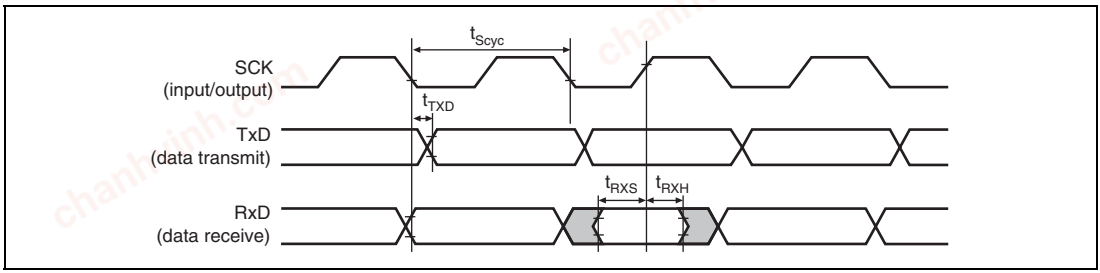

Figure 52.44 Transmit/Receive Data Input/Output Timing in Clocked Synchronous Mode

chanhvinh.com

52.4.9 Renesas Serial Peripheral Interface Timing

Table 52.13 Renesas Serial Peripheral Interface Timing

Item		Symbol	Min.	Max.	Unit	Figure
RSPCK clock cycle	Master	t_{SPcyc}	2	4096	t_{cyc}	Figure 52.45
	Slave		8	4096		
RSPCK clock high pulse width	Master	t_{SPCKWH}	0.4	—	t_{SPcyc}	
	Slave		0.4	—		
RSPCK clock low pulse width	Master	t_{SPCKWL}	0.4	—	t_{SPcyc}	
	Slave		0.4	—		
Data input setup time	Master	t_{SU}	15	—	ns	Figures 52.46 to 52.49
	Slave		0	—	t_{cyc}	
Data input hold time	Master	t_H	0	—	ns	
	Slave		4	—	t_{cyc}	
SSL setup time	Master	t_{LEAD}	$1 \times t_{SPcyc} - 20$	$8 \times t_{SPcyc}$	ns	
	Slave		4	—	t_{cyc}	
SSL hold time	Master	t_{LAG}	$1 \times t_{SPcyc}$	$8 \times t_{SPcyc} + 20$	ns	
	Slave		4	—	t_{cyc}	
Data output delay time	Master	t_{OD}	—	21	ns	
	Slave		—	4	t_{cyc}	
Data output hold time	Master	t_{OH}	5	—	ns	
	Slave		3	—	t_{cyc}	
Continuous transmission delay time	Master	t_{TD}	$1 \times t_{SPcyc} + 2\ t_{cyc}$	$8 \times t_{SPcyc} + 2 \times t_{cyc}$	ns	
	Slave		$4 \times t_{cyc}$	—		
Slave access time		t_{SA}	—	4	t_{cyc}	Figures 52.48 and 52.49
Slave out release time		t_{REL}	—	3	t_{cyc}	

chanhvinh.com

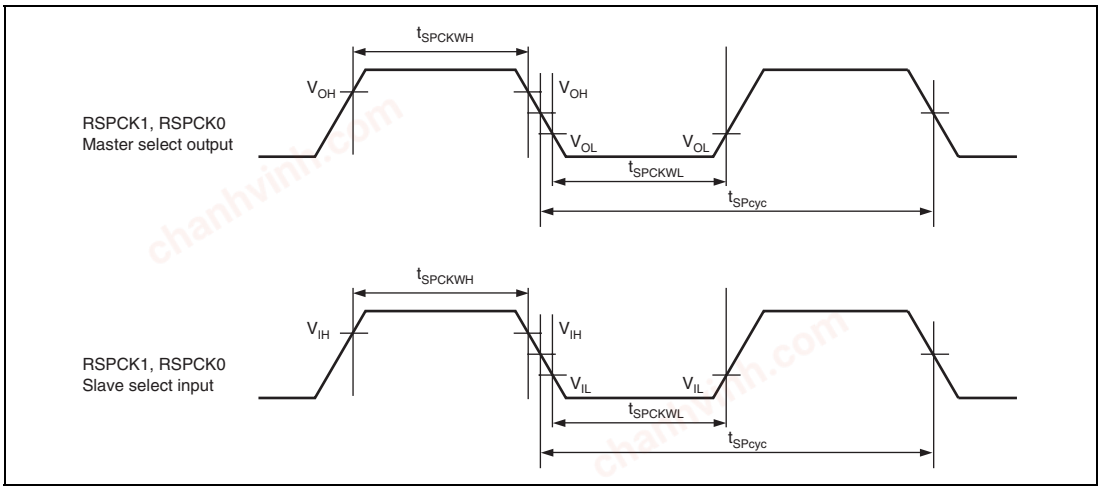

Figure 52.45 Clock Timing

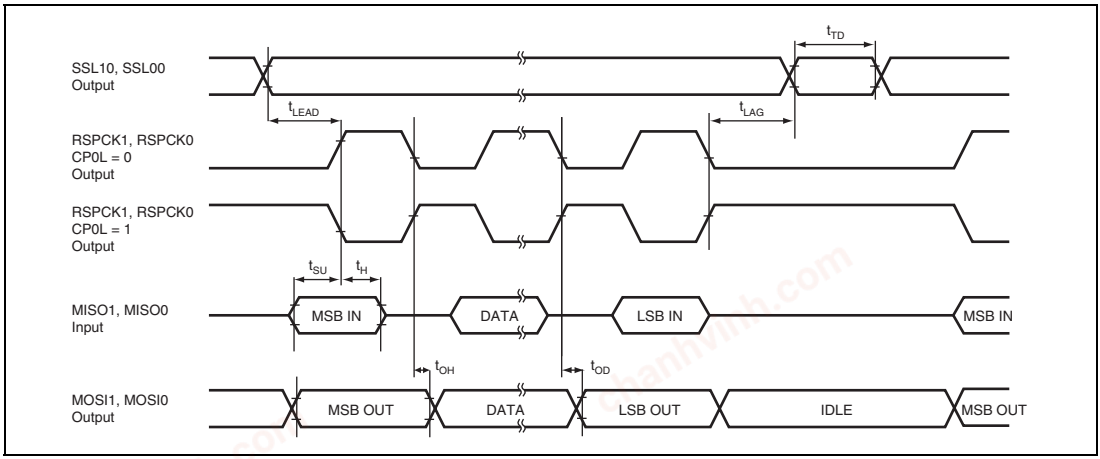

Figure 52.46 Transmission and Reception Timing (Master, CPHA = 0)

chanhvinh.com

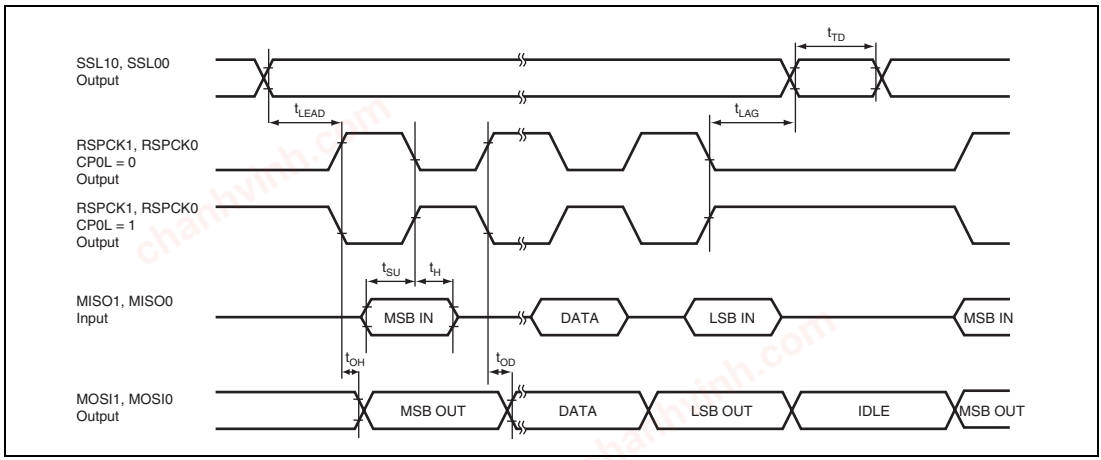

Figure 52.47 Transmission and Reception Timing (Master, CPHA = 1)

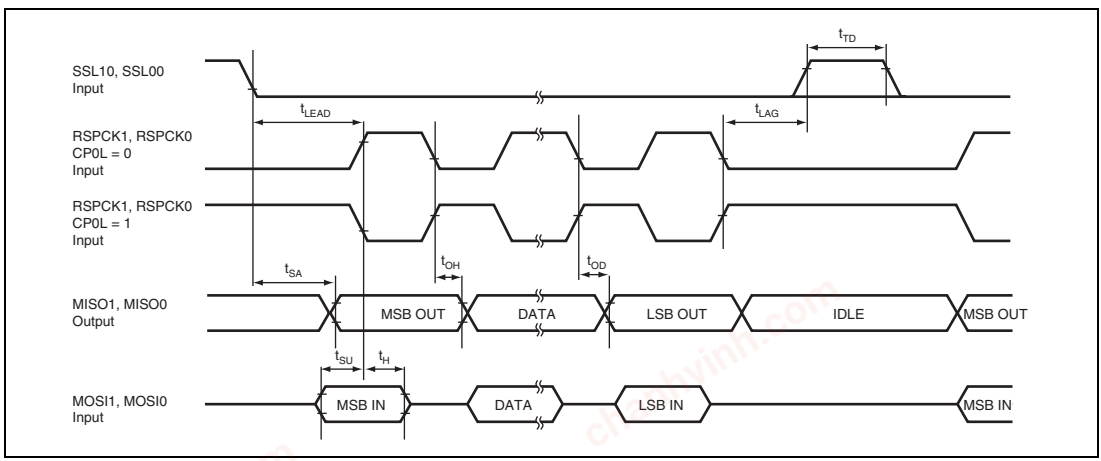

Figure 52.48 Transmission and Reception Timing (Slave, CPHA = 0)

chanhvinh.com

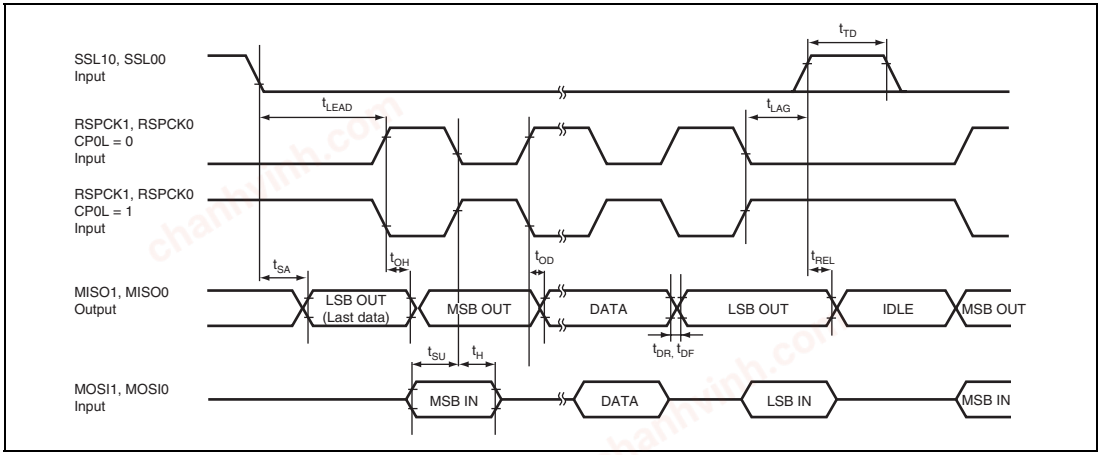

Figure 52.49 Transmission and Reception Timing (Slave, CPHA = 1)

chanhvinh.com

52.4.10 Renesas Quad Serial Peripheral Interface Timing

Table 52.14 Renesas Quad Serial Peripheral Interface Timing

Item	Symbol	Min.	Max.	Unit	Figure
QSPCLK clock cycle	t_{QScyc}	1	4080	t_{cyc}	Figure 52.50
Data input setup time	t_{SU}	5.0	—	ns	Figures 52.51 and 52.52
Data input hold time	t_{H}	0.0		ns	
SSL setup time	t_{LEAD}	$1.5 \times t_{QScyc} - 4$	$8.5 \times t_{QScyc}$	ns	
SSL hold time	t_{LAG}	$1 \times t_{QScyc}$	$8 \times t_{QScyc} + 4$	ns	
Data output delay time	t_{OD}	—	10.0	ns	
Data output hold time	t_{OH}	–5.0	—	ns	
Continuous transfer delay time	t_{TD}	1	8	t_{QScyc}	

Note: t_{cyc} indicates the peripheral clock 1 (P1ϕ) cycle.

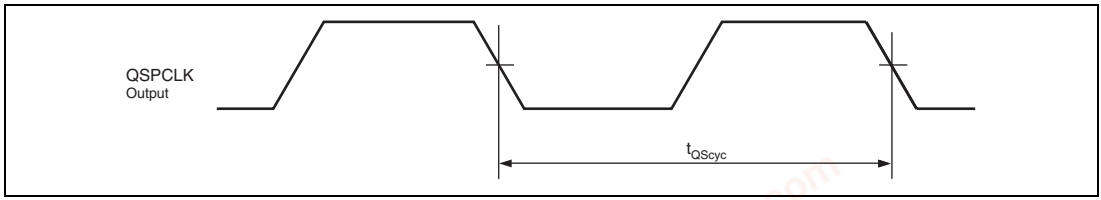

Figure 52.50 Clock Timing

chanhvinh.com

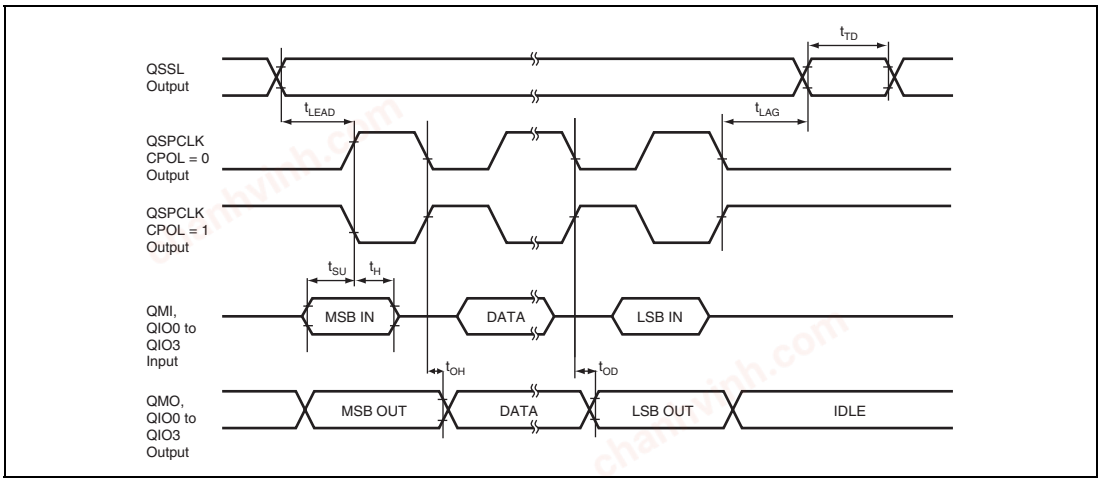

Figure 52.51 Transmission and Reception Timing (CPHA = 0)

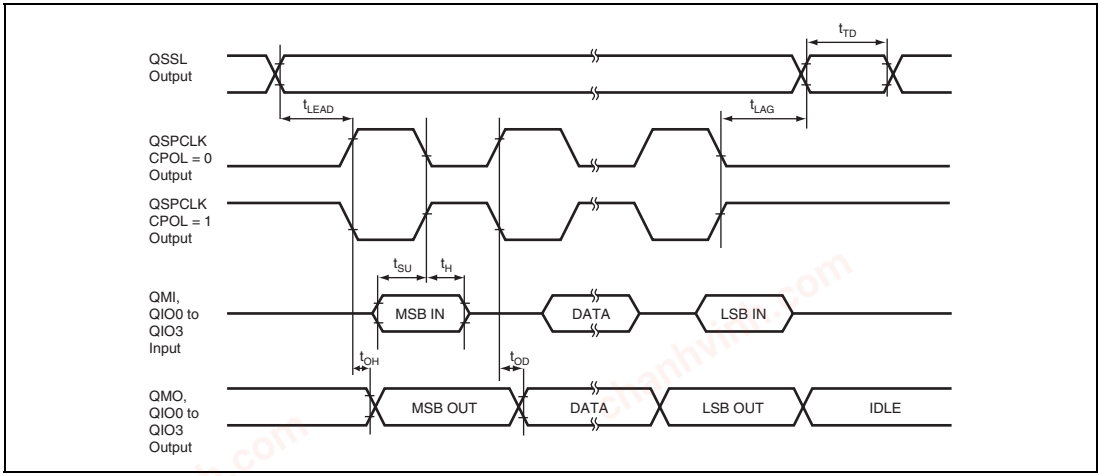

Figure 52.52 Transmission and Reception Timing (CPHA = 1)

chanhvinh.com

52.4.11 SPI Multi I/O Bus Controller Timing

Table 52.15 SPI Multi I/O Bus Controller Timing

Item	Symbol	Min.	Max.	Unit	Figure
SPBCLK clock cycle	t_{SPBcyc}	2	2	t_{cyc}	Figure 52.53
Data input setup time	t_{SU}	5.0	—	ns	Figures 52.54 and 52.55
Data input hold time	t_{H}	0.0	—	ns	
SSL setup time	t_{LEAD}	$1 \times t_{SPBcyc} - 3$	$8 \times t_{SPBcyc}$	ns	
SSL hold time	t_{LAG}	$1.5 \times t_{SPBcyc}$	$1.5 \times t_{SPBcyc} + 3$	ns	
Continuous transfer delay time	t_{TD}	1	1	t_{SPBcyc}	
Data output delay time	t_{OD}	—	4.0	ns	
Data output hold time	t_{OH}	–2.0	—	ns	
Data output buffer on time	t_{BON}	—	4.0	ns	Figures 52.56 and 52.57
Data output buffer off time	t_{BOFF}	–9.0	2.0	ns	

Note: t_{cyc} indicates the bus clock (Bϕ) cycle.

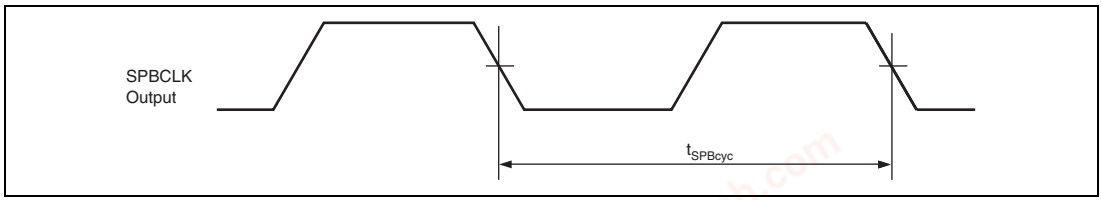

Figure 52.53 Clock Timing

chanhvinh.com

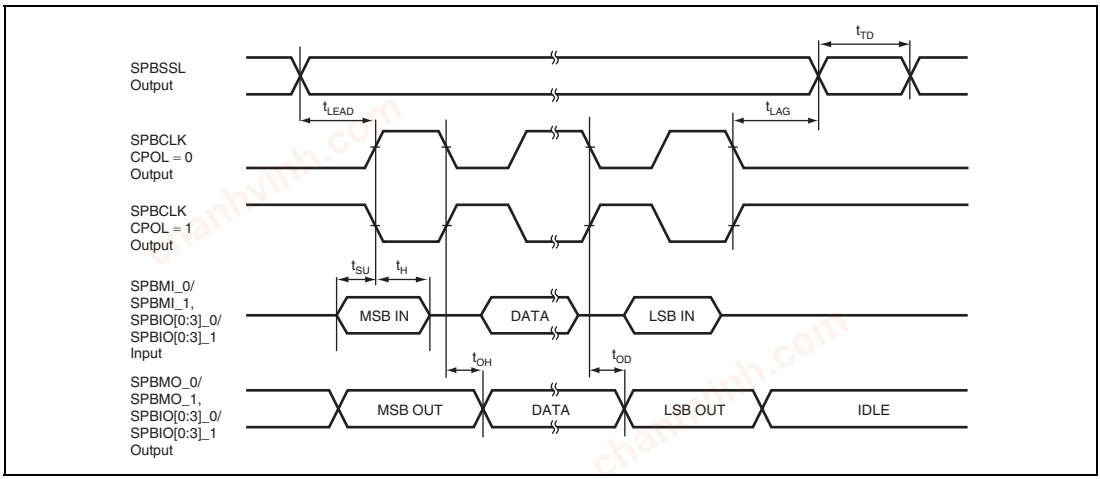

Figure 52.54 Transmission and Reception Timing (CPHAT = 0, CPHAR = 0)

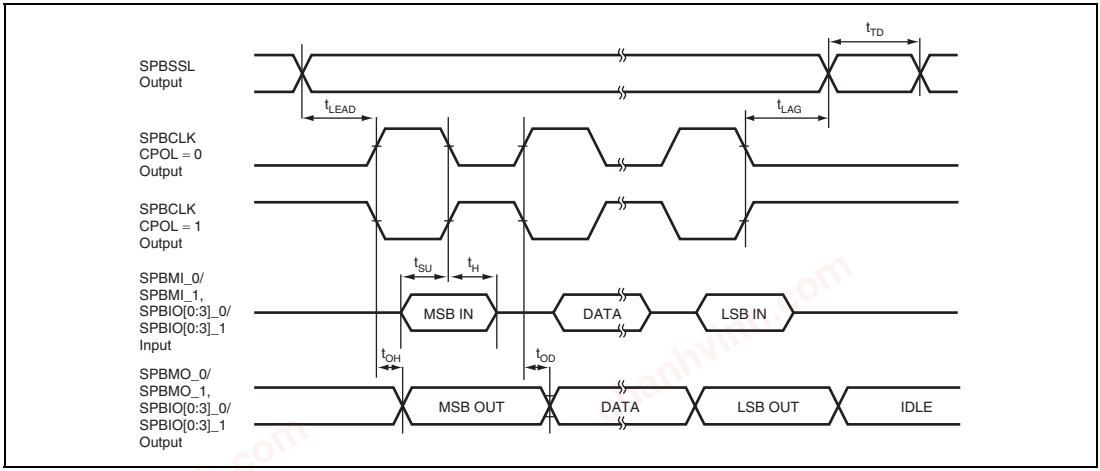

Figure 52.55 Transmission and Reception Timing (CPHAT = 1, CPHAR = 1)

chanhvinh.com

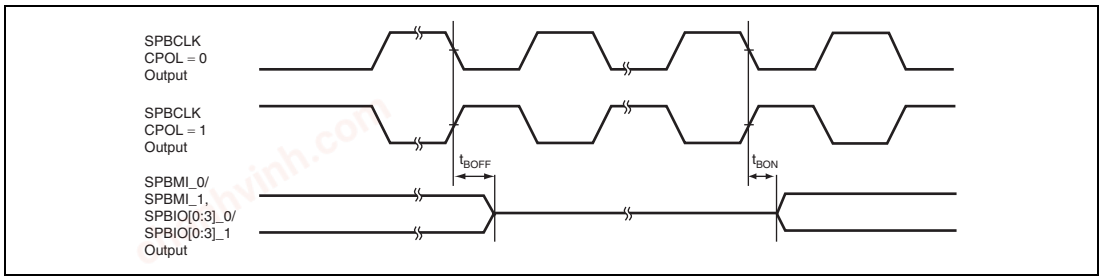

Figure 52.56 Timing for Switching the Buffers on and off (CPHAT = 0, CPHAR = 0)

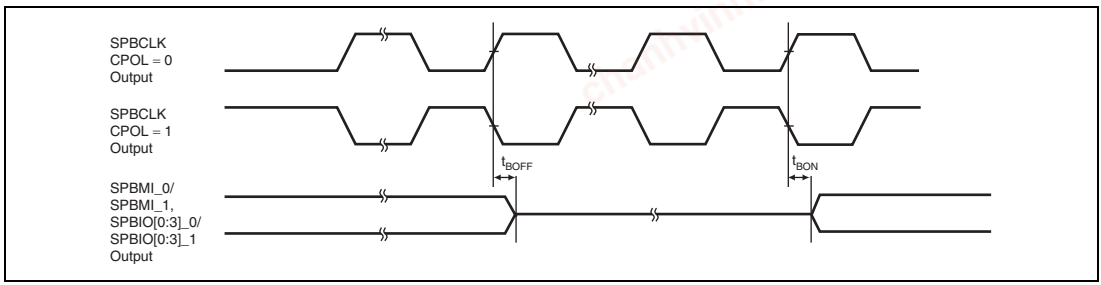

Figure 52.57 Timing for Switching the Buffers on and off (CPHAT = 1, CPHAR = 1)

chanhvinh.com

52.4.12 I²C Bus Interface 3 Timing

Table 52.16 (1) I²C Bus Interface 3 Timing I²C Bus Format

Item	Symbol	Min.	Max.	Unit	Figure
SCL input cycle time	t_{SCL}	12 t_{p0cyc}*1 + 600	—	ns	Figure 52.58(1)
SCL input high pulse width	t_{SCLH}	3 t_{p0cyc}*1 + 300	—	ns	
SCL input low pulse width	t_{SCLL}	5 t_{p0cyc}*1 + 300	—	ns	
SCL, SDA input rise time	t_{Sr}	—	300	ns	
SCL, SDA input fall time	t_{Sf}	—	300	ns	
SCL, SDA input spike pulse removal time*2	t_{SP}	—	1, 2	t_{p0cyc}*1	
SDA input bus free time	t_{BUF}	5	—	t_{p0cyc}*1	
Start condition input hold time	t_{STAH}	3	—	t_{p0cyc}*1	
Retransmit start condition input setup time	t_{STAS}	3	—	t_{p0cyc}*1	
Stop condition input setup time	t_{STOS}	3	—	t_{p0cyc}*1	
Data input setup time	t_{SDAS}	1 t_{p0cyc}*1 + 20	—	ns	
Data input hold time	t_{SDAH}	0	—	ns	
SCL, SDA capacitive load	Cb	0	400	pF	
SCL, SDA output fall time*3	t_{Sf}	—	250	ns	

Notes: 1. t_{p0cyc} indicates the peripheral clock 0 (P0ϕ) cycle.
2. Depends on the value of NF2CYC.
3. Indicates the I/O buffer characteristic.

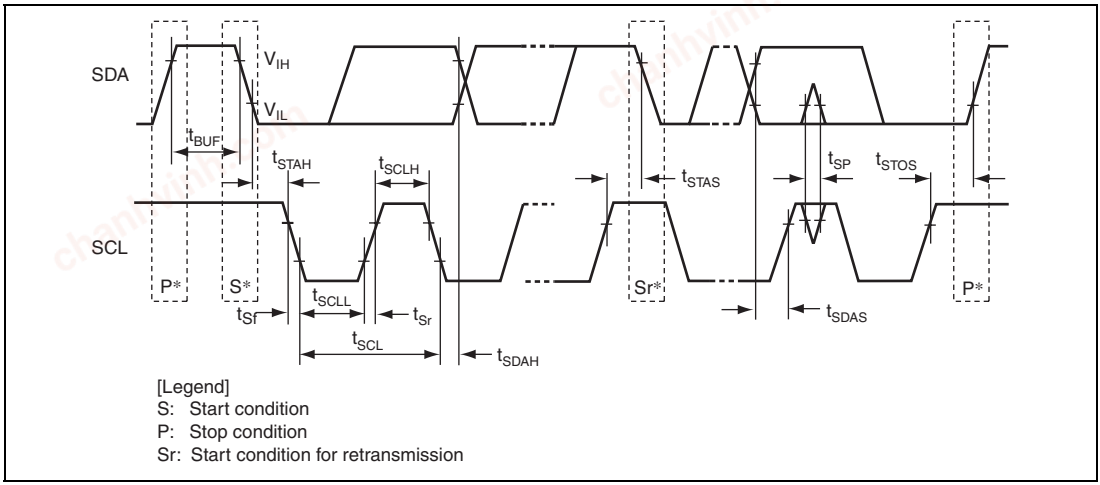

Figure 52.58(1) Input/Output Timing

chanhvinh.com

Table 52.16 (2) I²C Bus Interface 3 Timing Clock Synchronized Serial Format

Item	Symbol	Min.	Max.	Unit	Figure
SCL input cycle time	t_{SCL}	12 t_{pcyc} *1 + 600	—	ns	Figure 52.58(2)
SCL input high pulse width	t_{SCLH}	3 t_{pcyc} *1 + 300	—	ns	
SCL input low pulse width	t_{SCLL}	5 t_{pcyc} *1 + 300	—	ns	
SCL, SDA input rise time	t_{Sr}	—	300	ns	
SCL, SDA input fall time	t_{Sf}	—	300	ns	
SCL, SDA input spike pulse removal time*2	t_{SP}	—	1, 2	t_{pcyc} *1	
Data output delay time	t_{HD}	0	900	ns	Figure 52.58(3)
Data input setup time	t_{SDAS}	1 t_{pcyc} *1 + 20	—	ns	
Data input hold time	t_{SDAH}	0	—	ns	
SCL, SDA capacitive load	Cb	0	400	pF	Figures 52.58(2) and 52.58(3)
SCL, SDA output fall time*3	t_{Sf}	—	250	ns	

Notes: 1. t_{pcyc} indicates the peripheral clock 0 (P0ϕ) cycle.
2. Depends on the value of NF2CYC.
3. Indicates the I/O buffer characteristic.

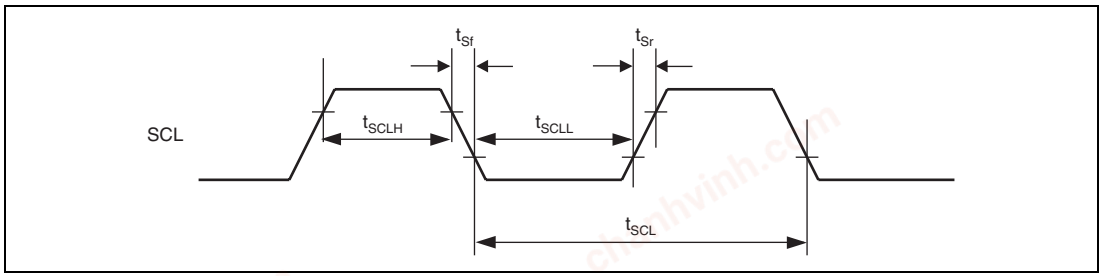

Figure 52.58(2) Clock Input/Output Timing

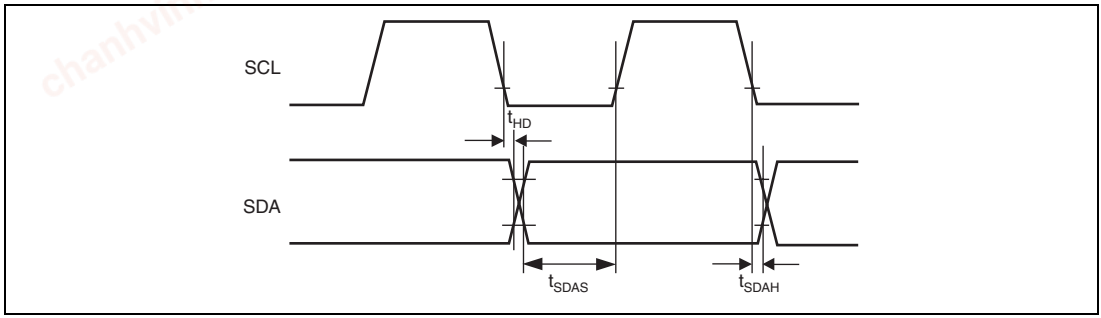

Figure 52.58(3) Transmission/Reception Timing

chanhvinh.com

52.4.13 Serial Sound Interface Timing

Table 52.17 Serial Sound Interface Timing

Item		Symbol	Min.	Max.	Unit	Remarks	Figure
Output clock cycle		t_O	80	64000	ns	Output	Figure 52.59
Input clock cycle		t_I	80	64000	ns	Input	
Clock high		t_{HC}	32	—	ns	Bidirectional	
Clock low		t_{LC}	32	—	ns		
Clock rise time		t_{RC}	—	25	ns	Output	
Delay	Noise canceler not in use	t_{DTR}	–5	25	ns		Figures 52.60 and 52.61
	Noise canceler in use		10	45	ns		
Setup time		t_{SR}	25	—	ns		
Hold time		t_{HTR}	5	—	ns		

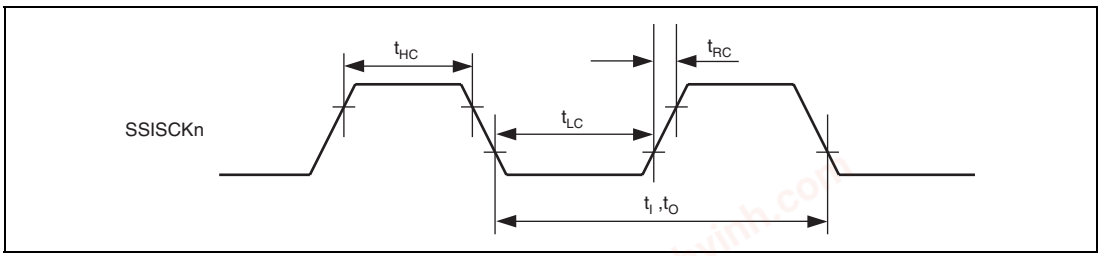

Figure 52.59 Clock Input/Output Timing

chanhvinh.com

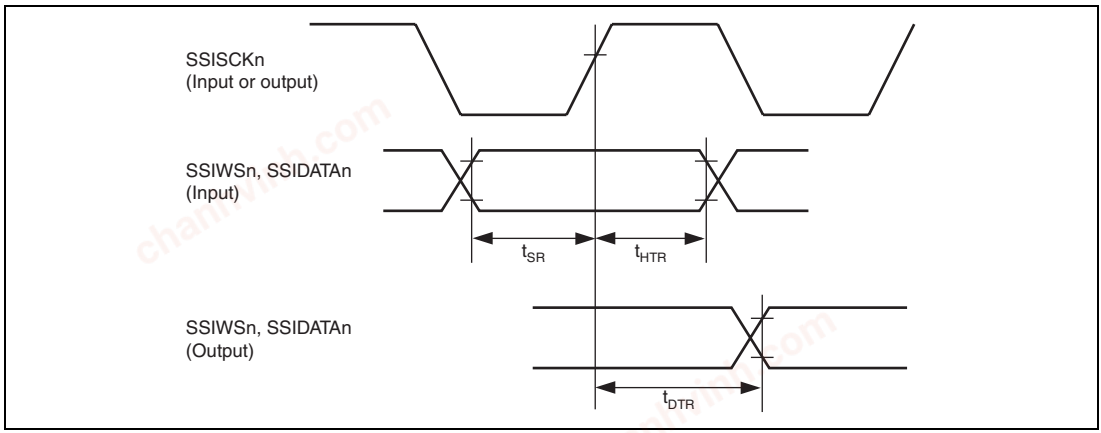

Figure 52.60 Transmission and Reception Timing (Synchronization with Rising Edge of SSISCKn)

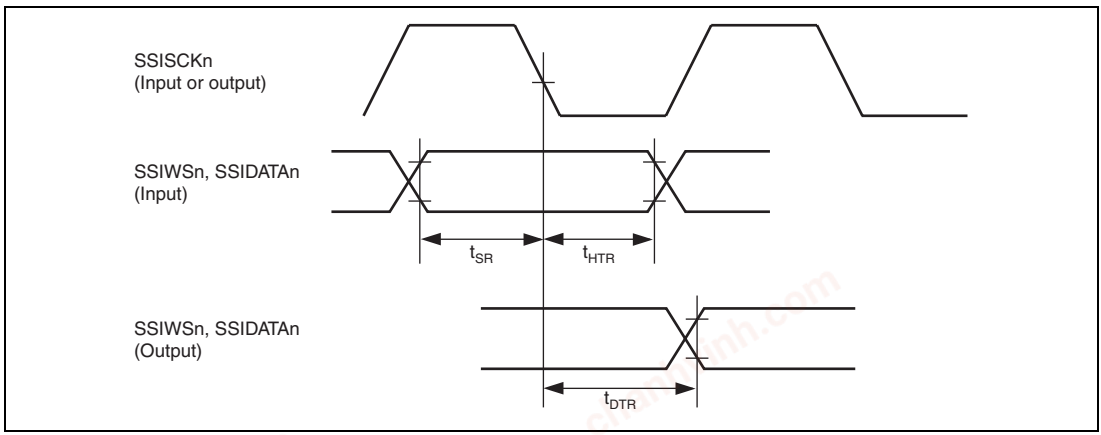

Figure 52.61 Transmission and Reception Timing (Synchronization with Falling Edge of SSISCKn)

chanhvinh.com

52.4.14 Serial I/O with FIFO Timing

Table 52.18 Serial I/O with FIFO Timing

Item	Symbol	Min.	Max.	Unit	Figure
SCK_SIO clock input/output cycle time	t_{SIcyc}	80	—	ns	Figures 52.62 to 52.64
SCK_SIO output high width	t_{SWHO}	0.4 × t_{SIcyc}	—		Figures 52.62 and 52.63
SCK_SIO output low width	t_{SWLO}	0.4 × t_{SIcyc}	—		
SIOFSYNC output delay time	t_{FSD}	–5	20		
SCK_SIO input high width	t_{SWHI}	0.4 × t_{SIcyc}	—		Figure 52.64
SCK_SIO input low width	t_{SWLI}	0.4 × t_{SIcyc}	—		
SIOFSYNC input setup time	t_{FSS}	20	—		
SIOFSYNC input hold time	t_{FSH}	20	—		
TXD_SIO output delay time	t_{STDD}	–5	20		Figures 52.62 to 52.64
RXD_SIO input setup time	t_{SRDS}	20	—		
RXD_SIO input hold time	t_{SRDH}	20	—		

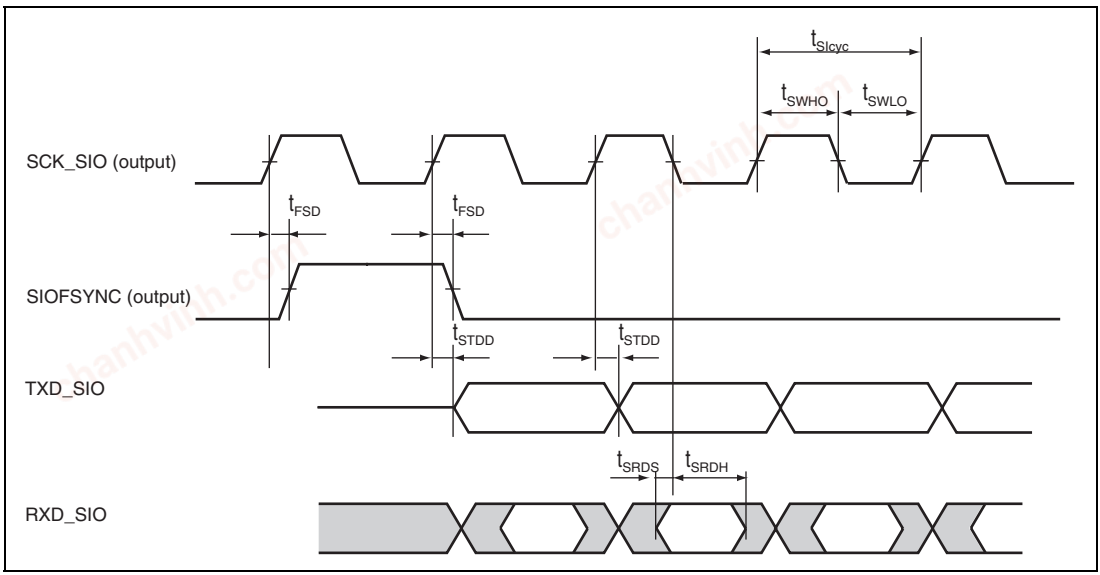

Figure 52.62 Transmission and Reception Timing (Master Mode 1, Sampled at Falling Edge)

chanhvinh.com

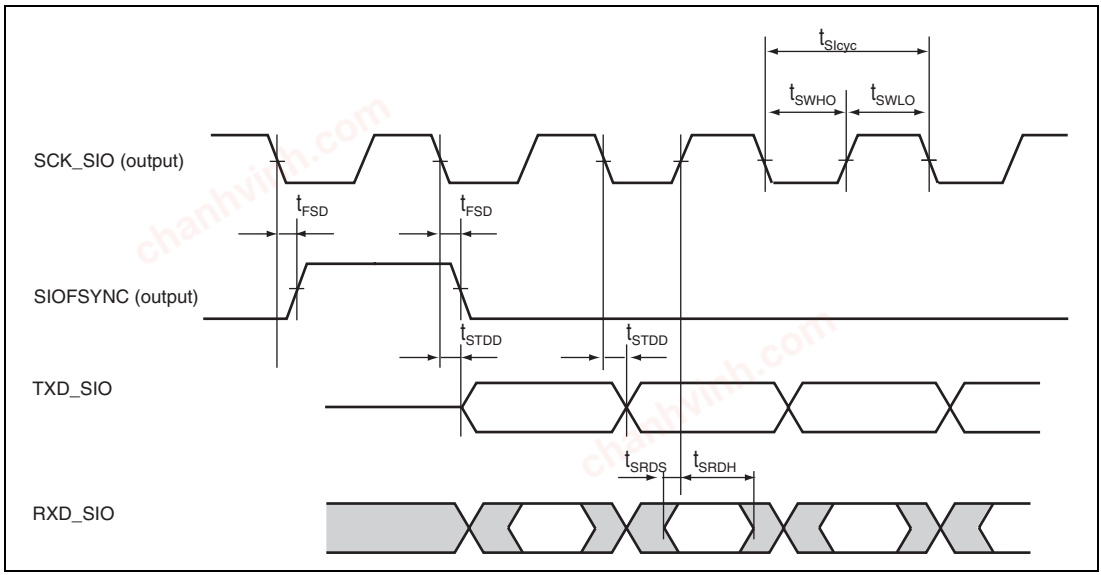

Figure 52.63 Transmission and Reception Timing (Master Mode 1, Sampled at Rising Edge)

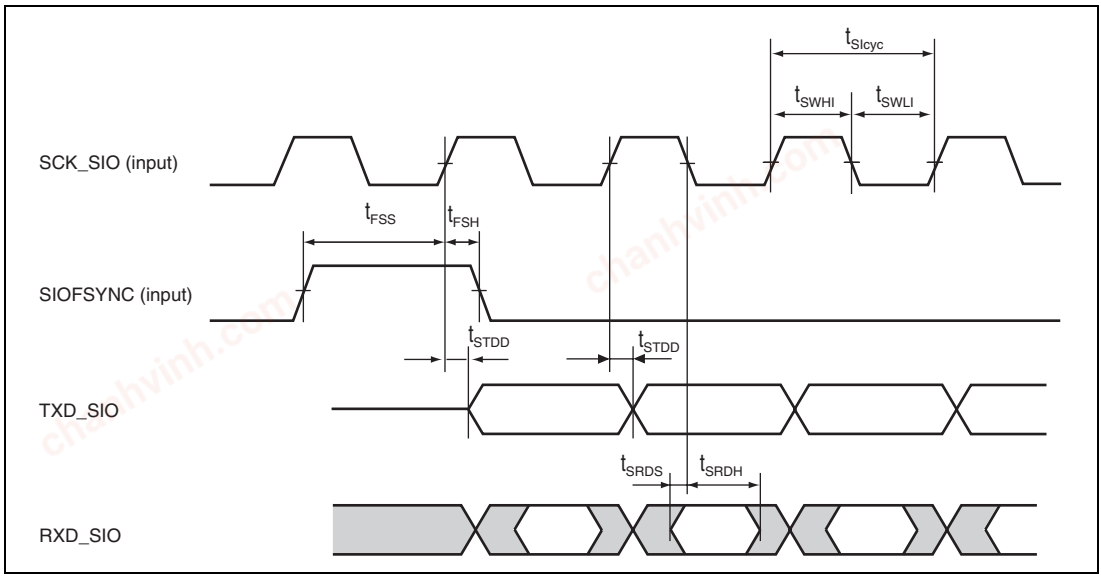

Figure 52.64 Transmission and Reception Timing (Slave Mode 1)

chanhvinh.com

52.4.15 A/D Converter Timing

Table 52.19 A/D Converter Timing

Module	Item	Symbol	Min.	Max.	Unit	Figure
A/D converter	Trigger input setup time	t_{TRGS}	17	—	ns	Figure 52.65

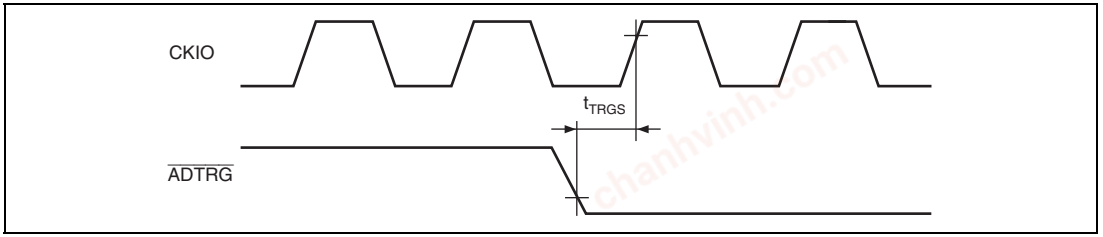

Figure 52.65 A/D Converter External Trigger Input Timing

chanhvinh.com

52.4.16 NAND Type Flash Memory Controller Timing

Table 52.20 NAND Type Flash Memory Interface Timing

Item	Symbol	Min.	Max.	Unit	Figure
Command output setup time	t_{NCDS}	$2 \times t_{fcyc} - 10$	—	ns	Figures 52.66 and 52.70
Command output hold time	t_{NCDH}	$1.5 \times t_{fcyc} - 5$	—	ns	
Data output setup time	t_{NDOS}	$0.5 \times t_{wfcyc} - 5$	—	ns	Figures 52.66, 52.67, 52.69, and 52.70
Data output hold time	t_{NDOH}	$0.5 \times t_{wfcyc} - 10$	—	ns	
Command to address transition time 1	t_{NCDAD1}	$1.5 \times t_{fcyc} - 10$	—	ns	Figures 52.66 and 52.67
Command to address transition time 2	t_{NCDAD2}	$2 \times t_{fcyc} - 10$	—	ns	Figure 52.67
$\overline{FWE}$ cycle time	t_{NWC}	$t_{wfcyc} - 5$	—	ns	Figures 52.67 and 52.69
$\overline{FWE}$ low pulse width	t_{NWP}	$0.5 \times t_{wfcyc} - 5$	—	ns	Figures 52.66, 52.67, 52.69, and 52.70
$\overline{FWE}$ high pulse width	t_{NWH}	$0.5 \times t_{wfcyc} - 5$	—	ns	Figures 52.67 and 52.69
Address to ready/busy transition time	t_{NADRB}	—	$32 \times t_{p0cyc}$	ns	Figures 52.67 and 52.68
Command to ready/busy transition time	t_{NCDRB}	—	$10 \times t_{p0cyc}$	ns	Figures 52.67 and 52.68
Ready/busy to data read transition time 1	t_{NRBDR1}	$1.5 \times t_{fcyc}$	—	ns	Figure 52.68
Ready/busy to data read transition time 2	t_{NRBDR2}	$32 \times t_{p0cyc}$	—	ns	
$\overline{FRE}$ cycle time	t_{NSCC}	$t_{wfcyc} - 5$	—	ns	
$\overline{FRE}$ low pulse width	t_{NSP}	$0.5 \times t_{wfcyc} - 5$	—	ns	Figures 52.68 and 52.70

chanhvinh.com

Item	Symbol	Min.	Max.	Unit	Figure
$\overline{FRE}$ high pulse width	t_{NSPH}	$0.5 \times t_{wfcyc} - 5$	—	ns	Figure 52.68
Read data setup time	t_{NRDS}	16	—	ns	Figures 52.68 and 52.70
Read data hold time	t_{NRDH}	5	—	ns	Figures 52.68 and 52.70
Data write setup time	t_{NDWS}	$32 \times t_{p0cyc}$	—	ns	Figure 52.69
Command to status read transition time	t_{NCDSR}	$4 \times t_{fcyc}$	—	ns	Figure 52.70
Command output off to status read transition time	t_{NCDFSR}	$3.5 \times t_{fcyc}$	—	ns	
Status read setup time	t_{NSTS}	$2.5 \times t_{fcyc}$	—	ns	
$\overline{FCE}$ output setup time	t_{NCES}	$8 \times t_{p0cyc}$	—	ns	Figure 52.66
$\overline{FCE}$ output hold time	t_{NCEH}	t_{p0cyc}	—	ns	Figure 52.69
$\overline{FCE}$ output access time	t_{NCEA}	$6 \times t_{p0cyc}$	—	ns	Figure 52.68
$\overline{FCE}$ output high-level hold time	t_{NCEOH}	$2 \times t_{p0cyc}$	—	ns	

Note: t_{fcyc} indicates the period of one cycle of the FLCTL clock.

t_{wfcyc} indicates the period of one cycle of the FLCTL clock when the value of the NANDWF bit is 0. On the other hand, t_{wfcyc} indicates the period of two cycles of the FLCTL clock when the value of the NANDWF bit is 1.

t_{p0cyc} indicates the period of one cycle of the peripheral clock 0 (P0ϕ).

chanhvinh.com

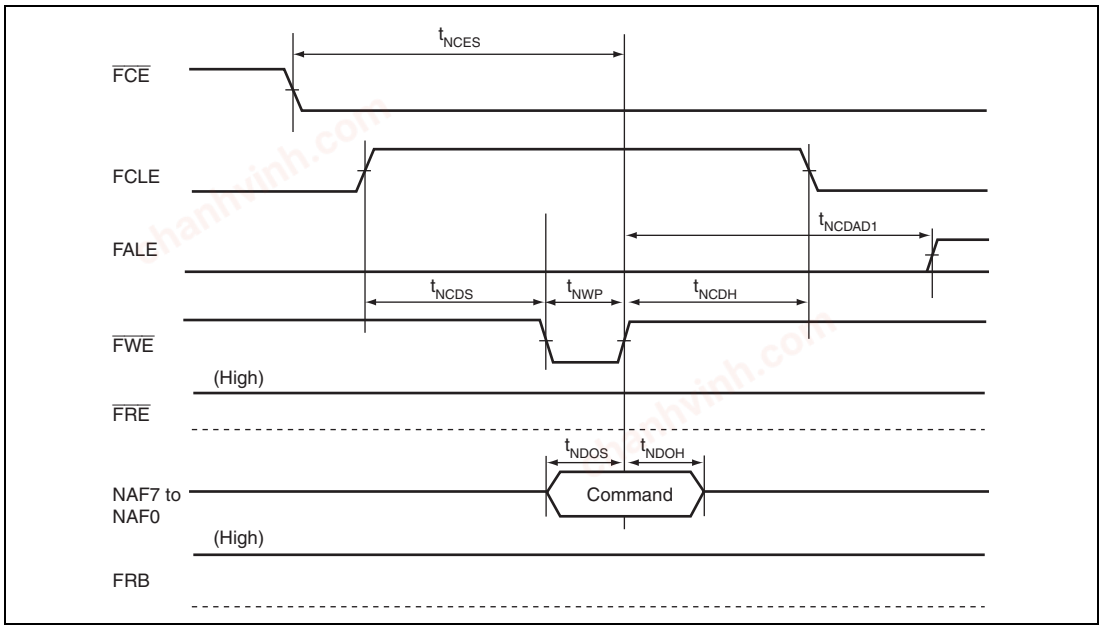

Figure 52.66 NAND Type Flash Memory Command Issuance Timing

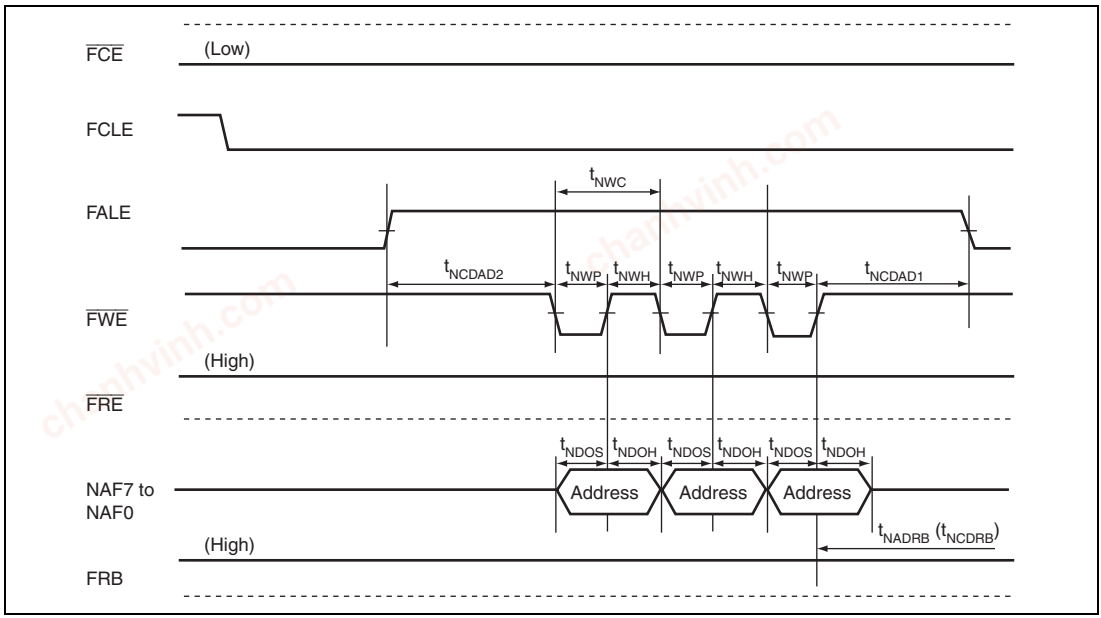

Figure 52.67 NAND Type Flash Memory Address Issuance Timing

chanhvinh.com

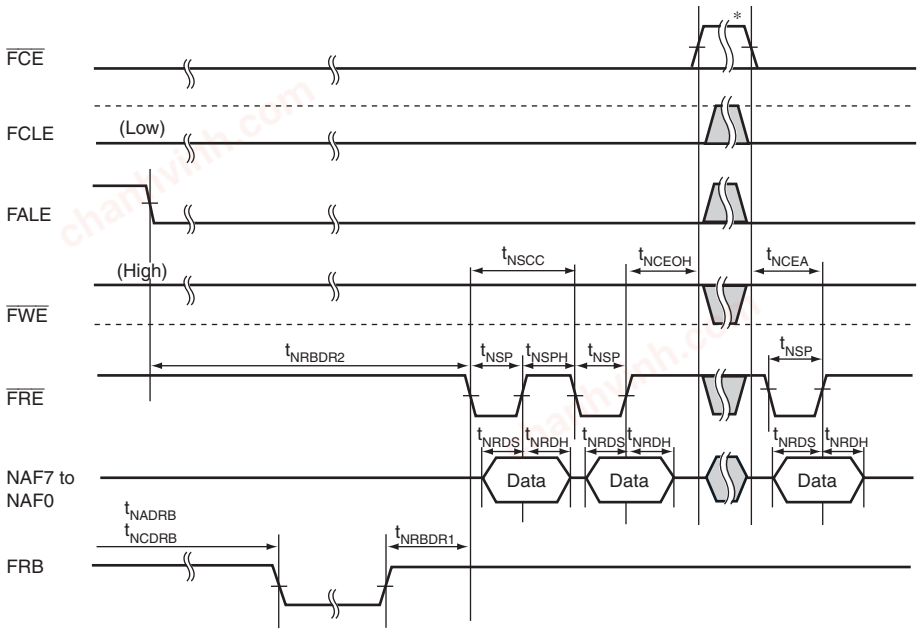

Note: * Waveform when the HOLDEN bit is 1.

Figure 52.68 NAND Type Flash Memory Data Read Timing

chanhvinh.com

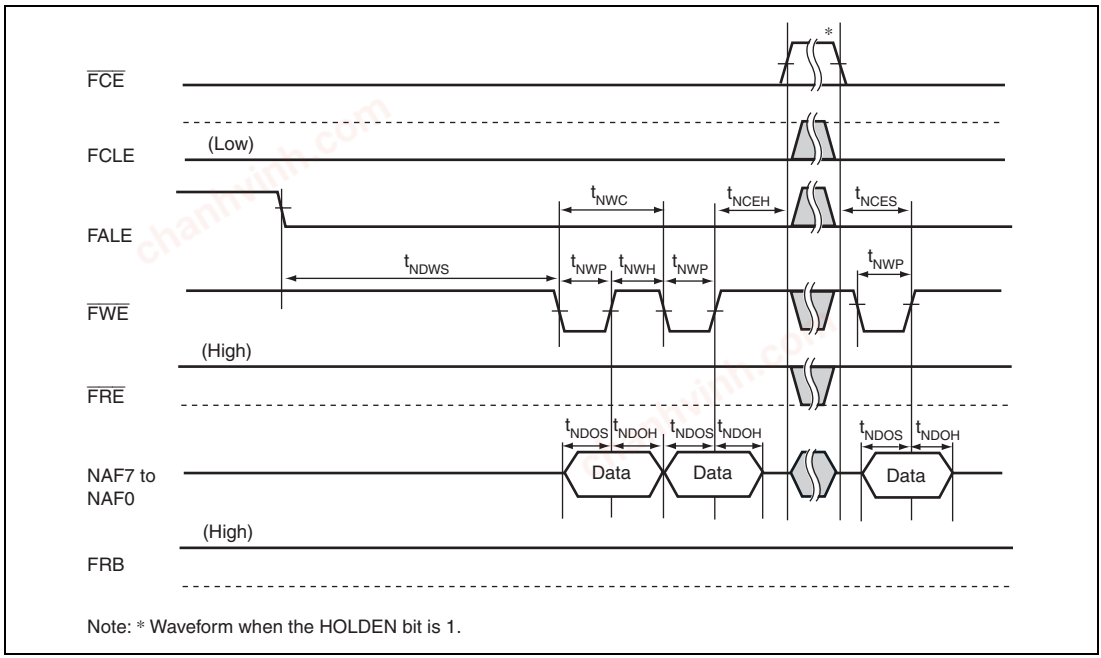

Note: * Waveform when the HOLDEN bit is 1.

Figure 52.69 NAND Type Flash Memory Data Write Timing

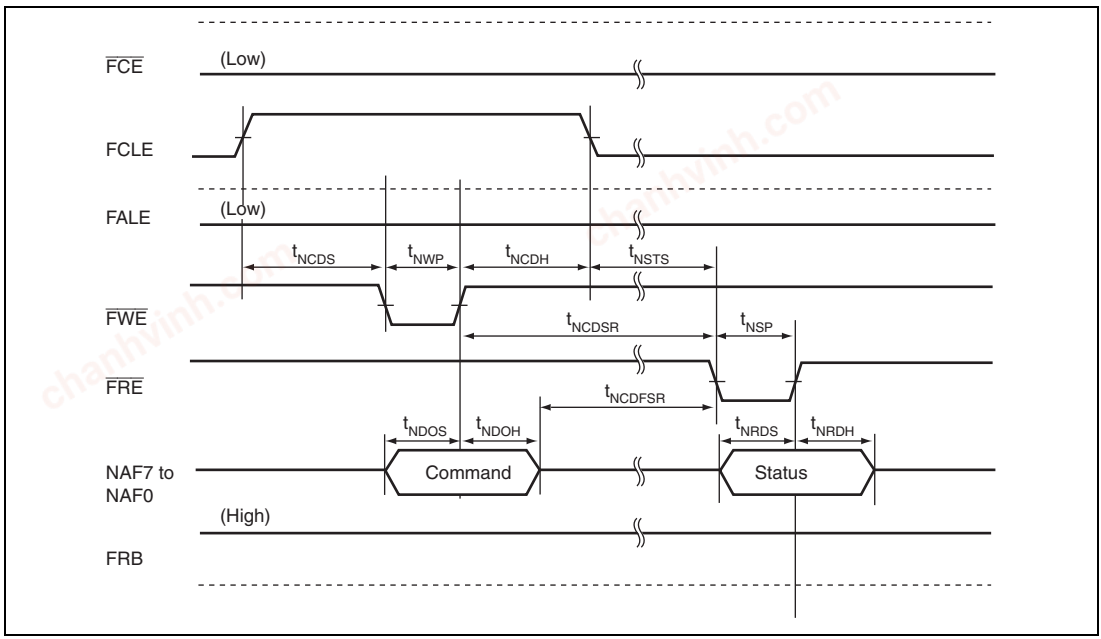

Figure 52.70 NAND Type Flash Memory Status Read Timing

chanhvinh.com

52.4.17 USB 2.0 Host/Function Module Timing

Table 52.21 USB Transceiver Timing (Low-Speed)

Item	Symbol	Min.	Typ.	Max.	Unit	Figure
Rise time	t_{LR}	75	—	300	ns	Figure 52.71
Fall time	t_{LF}	75	—	300	ns	
Rise/fall time lag	t_{LR}/t_{LF}	80	—	125	%	

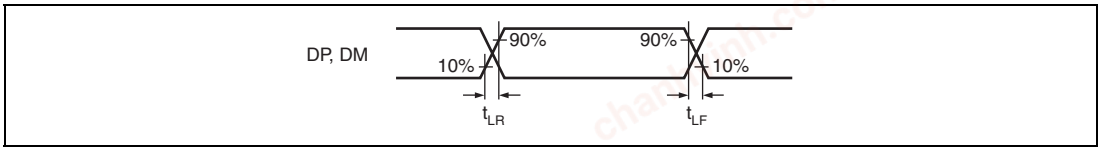

Figure 52.71 DP and DM Output Timing (Low-Speed)

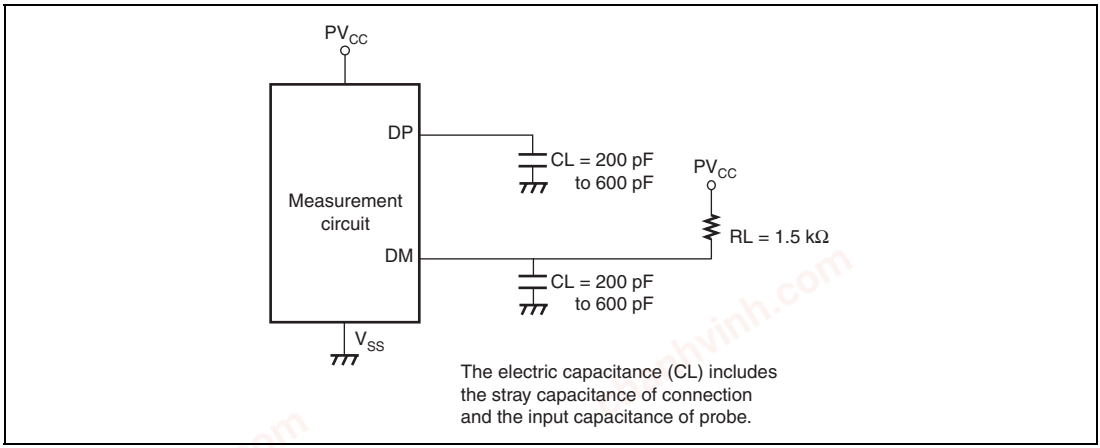

Figure 52.72 Measurement Circuit (Low-Speed)

chanhvinh.com

Table 52.22 USB Transceiver Timing (Full-Speed)

Item	Symbol	Min.	Typ.	Max.	Unit	Figure
Rise time	t_{FR}	4	—	20	ns	Figure 52.73
Fall time	t_{FF}	4	—	20	ns	
Rise/fall time lag	t_{FR}/t_{FF}	90	—	111.11	%	

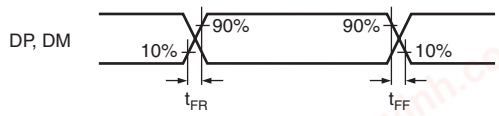

Figure 52.73 DP and DM Output Timing (Full-Speed)

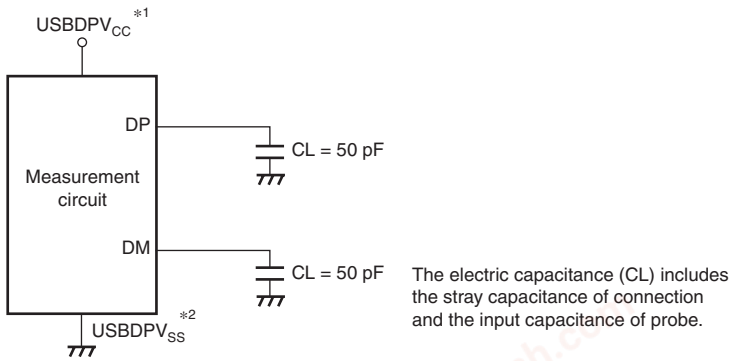

Notes: 1. The PVcc pin is used in SH7269 (BGA) Group products.
2. The Vss pin is used in SH7269 (BGA) Group products.

Figure 52.74 Measurement Circuit (Full-Speed)

chanhvinh.com

Table 52.23 USB Transceiver Timing (High-Speed)

Item	Symbol	Min.	Typ.	Max.	Unit	Figure
Rise time	t_{HSR}	500	—	—	ps	Figure 52.75
Fall time	t_{HSF}	500	—	—	ps	
Output driver resistance	Z_{HSDRV}	40.5	—	49.5	Ω	

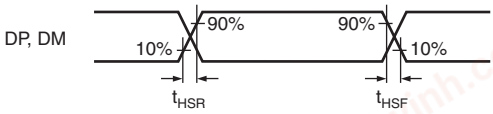

Figure 52.75 DP and DM Output Timing (High-Speed)

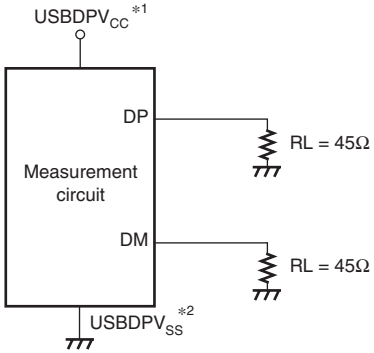

Notes: 1. The PVcc pin is used in SH7269 (BGA) Group products.
2. The Vss pin is used in SH7269 (BGA) Group products.

Figure 52.76 Measurement Circuit (High-Speed)

chanhvinh.com

52.4.18 Video Display Controller 4 Timing

Table 52.24 Video Display Controller 4 Timing

Item	Symbol	Min.	Typ.	Max.	Unit	Figure
DV_CLK input clock frequency	t_{Dcyc}	—	—	66.67	MHz	Figure 52.77
DV_CLK input clock low pulse width	t_{WIL}	0.4	—	—	t_{Dcyc}	
DV_CLK input clock high pulse width	t_{WIH}	0.4	—	—		
LCD_EXTCLK input clock frequency	t_{Ecyc}	—	—	66.67	MHz	
LCD_EXTCLK input clock low pulse width	t_{WIL}	0.4	—	—	t_{Ecyc}	
LCD_EXTCLK input clock high pulse width	t_{WIH}	0.4	—	—		
LCD_CLK output clock frequency	t_{Lcyc}	—	—	66.67	MHz	Figure 52.78
Input data setup time	t_{VS}	4	—	—	ns	Figure 52.79
Input data hold time	t_{VH}	4	—	—	ns	
Output data delay time	t_{DD}	–5	—	3	ns	Figure 52.80

chanhvinh.com

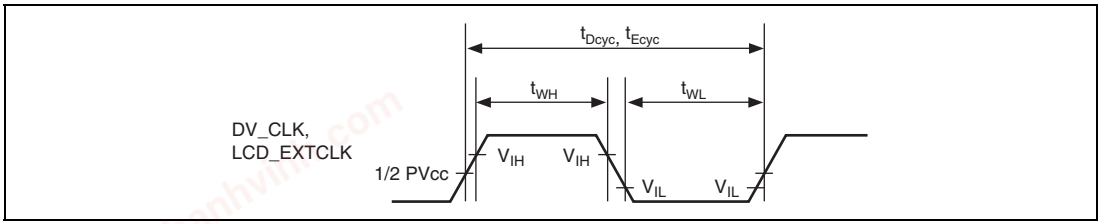

Figure 52.77 DV_CLK and LCD_EXTCLK Clock Input Timing

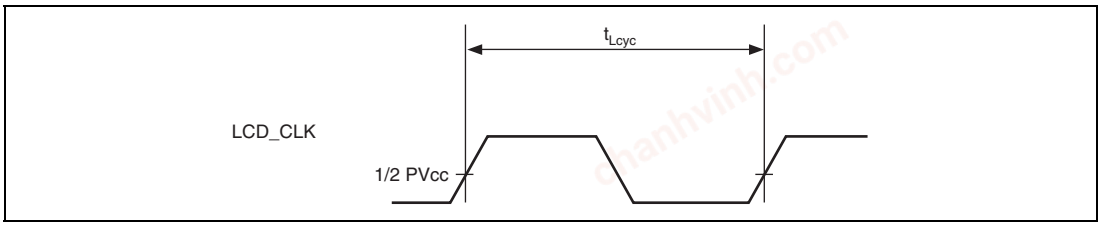

Figure 52.78 LCD_CLK Clock Output Timing

chanhvinh.com

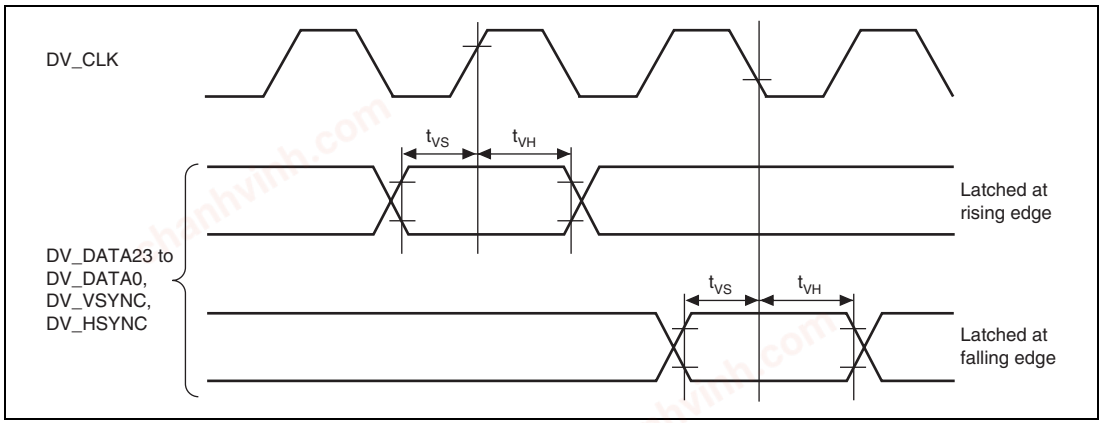

Figure 52.79 Video Input Timing

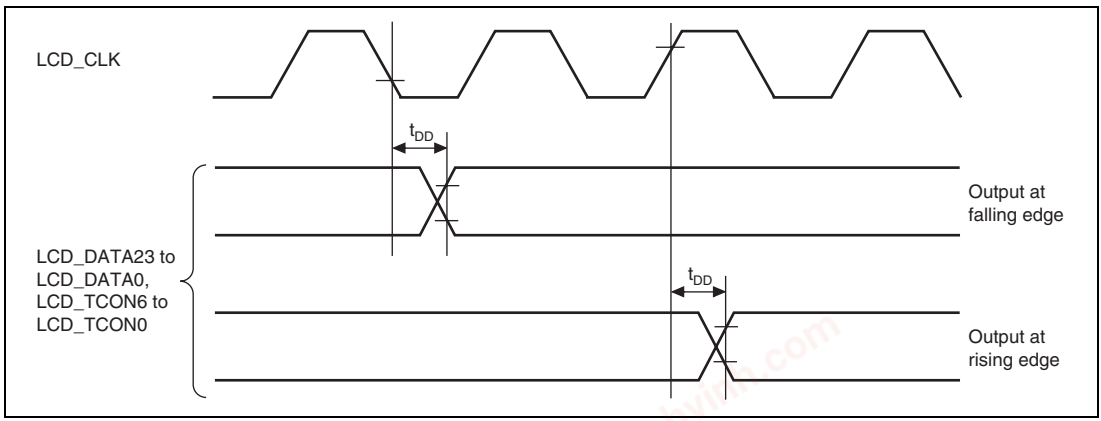

Figure 52.80 Display Output Timing

chanhvinh.com

52.4.19 SD Host Interface Timing

Table 52.25 SD Host Interface Timing

Item	Symbol	Min.	Max.	Unit	Figure
SD_CLK clock cycle	t_{SDPP}	2 × t_{p1cyc}	—	ns	Figure 52.81
SD_CLK clock high width	t_{SDWH}	0.4 × t_{SDPP}	—	ns	
SD_CLK clock low width	t_{SDWL}	0.4 × t_{SDPP}	—	ns	
SD_CLK clock rise time	t_{SDLH}	—	3	ns	
SD_CLK clock fall time	t_{SDHL}	—	3	ns	
SD_CMD, SD_D3 to SD_D0 output data delay (data transfer mode)	t_{SDODLY}	—	4	ns	
SD_CMD, SD_D3 to SD_D0 input data setup	t_{SDISU}	5	—	ns	
SD_CMD, SD_D3 to SD_D0 input data hold	t_{SDIH}	2	—	ns	

Note: t_{p1cyc} indicates peripheral clock 1 (P1ϕ) cycle.

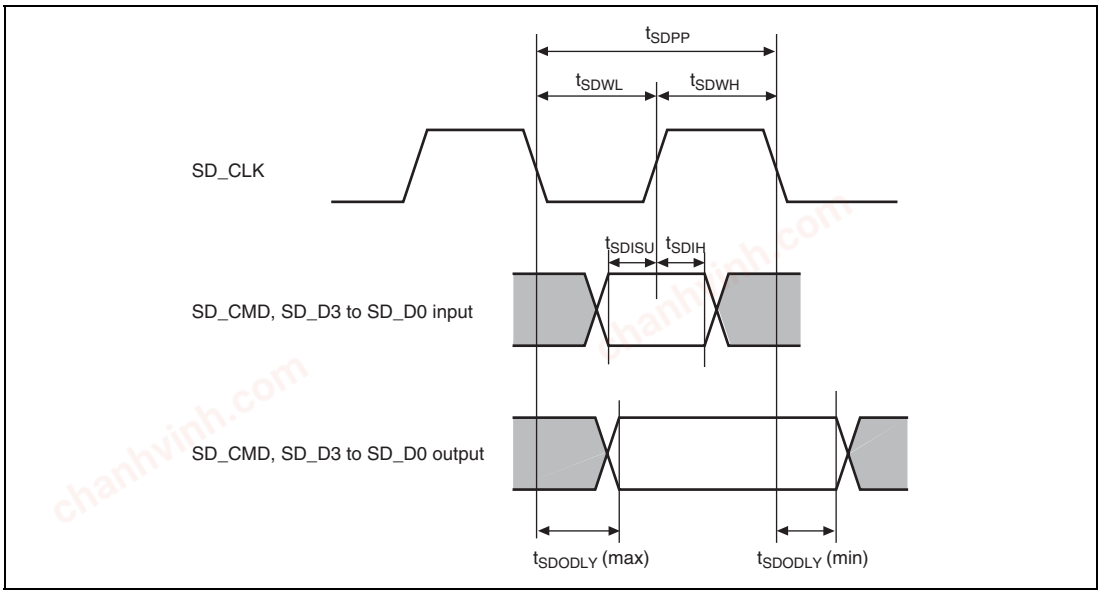

Figure 52.81 SD Card Interface

chanhvinh.com

52.4.20 MMC Host Interface Timing

Table 52.26 MMC Host Interface Timing

Item	Symbol	Min.	Max.	Unit	Figure
MMC_CLK clock cycle	t_{MMCPP}	2 × t_{p1cyc}	—	ns	Figure 52.82
MMC_CLK clock high level width	t_{MMCWH}	6.5	—	ns	
MMC_CLK clock low level width	t_{MMCWL}	6.5	—	ns	
MMC_CLK clock rise time	t_{MMCLH}	—	3	ns	
MMC_CLK clock fall time	t_{MMCHL}	—	3	ns	
MMC_CMD, MMC_D7 to MMC_D0 output data delay time (data transfer mode)	$t_{MMCODLY}$	–6.5	6.5	ns	
MMC_CMD, MMC_D7 to MMC_D0 intput data setup time	t_{MMCISU}	4.5	—	ns	
MMC_CMD, MMC_D7 to MMC_D0 intput data hold time	t_{MMCIH}	2	—	ns	

Note: t_{p1cyc} indicates peripheral clock 1 (P1ϕ) cycle.

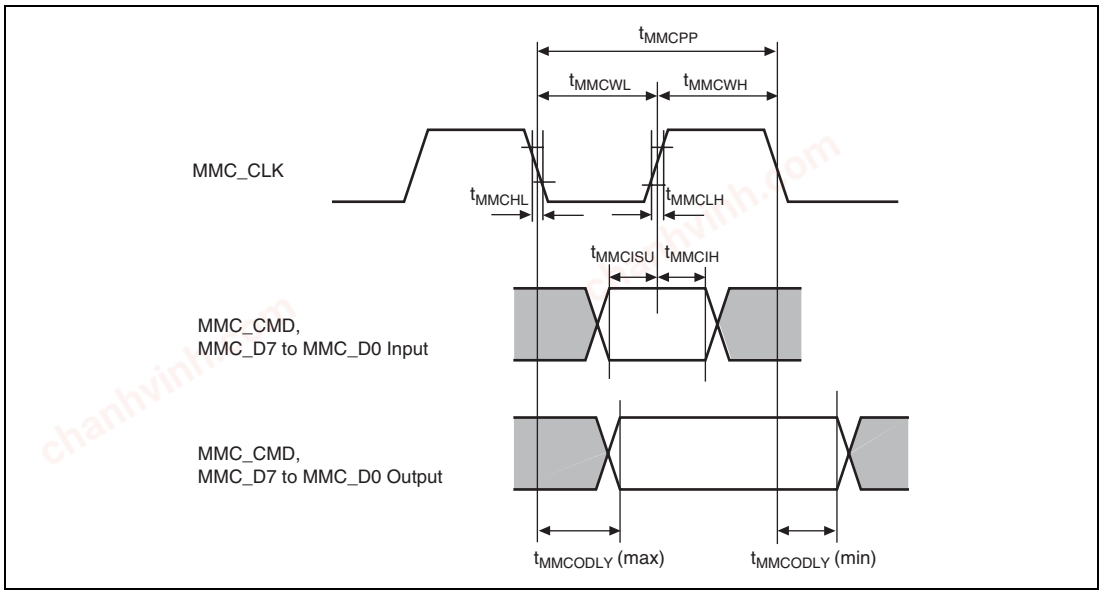

Figure 52.82 MMC Interface

chanhvinh.com

52.4.21 General Purpose I/O Ports Timing

Table 52.27 General Purpose I/O Ports Timing

Item	Symbol	Min.	Max.	Unit	Figure
Output data delay time	t_{PORTD}	—	100	ns	Figure 52.83
Input data setup time	t_{PORTS}	100	—		
Input data hold time	t_{PORTH}	100	—		

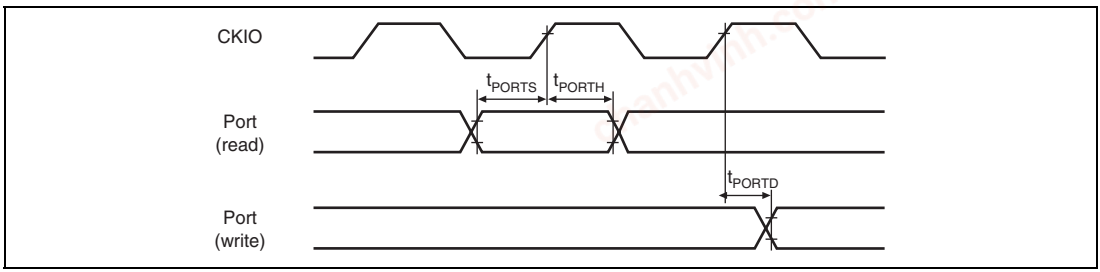

Figure 52.83 General I/O Ports Timing

chanhvinh.com

52.4.22 User Debugging Interface Timing

Table 52.28 User Debugging Interface Timing

Item	Symbol	Min.	Max.	Unit	Figure
TCK cycle time	t_{TCKcyc}	50*	—	ns	Figure 52.84
TCK high pulse width	t_{TCKH}	0.4	0.6	t_{TCKcyc}	
TCK low pulse width	t_{TCKL}	0.4	0.6	t_{TCKcyc}	
TDI setup time	t_{TDIS}	10	—	ns	Figure 52.85
TDI hold time	t_{TDIH}	10	—	ns	
TMS setup time	t_{TMSS}	10	—	ns	
TMS hold time	t_{TMSH}	10	—	ns	
TDO delay time	t_{TDOD}	—	16	ns	
Capture register setup time	t_{CAPTS}	10	—	ns	Figure 52.86
Capture register hold time	t_{CAPTH}	10	—	ns	
Update register delay time	$t_{UPDATED}$	—	20	ns	

Note: * Should be greater than the peripheral clock 0 (P0ϕ) cycle time.

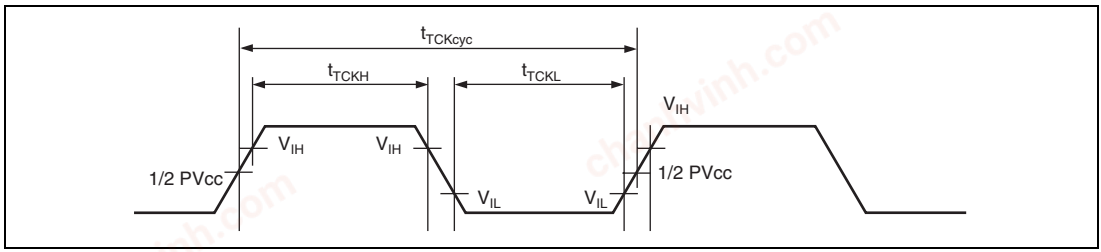

Figure 52.84 TCK Input Timing

chanhvinh.com

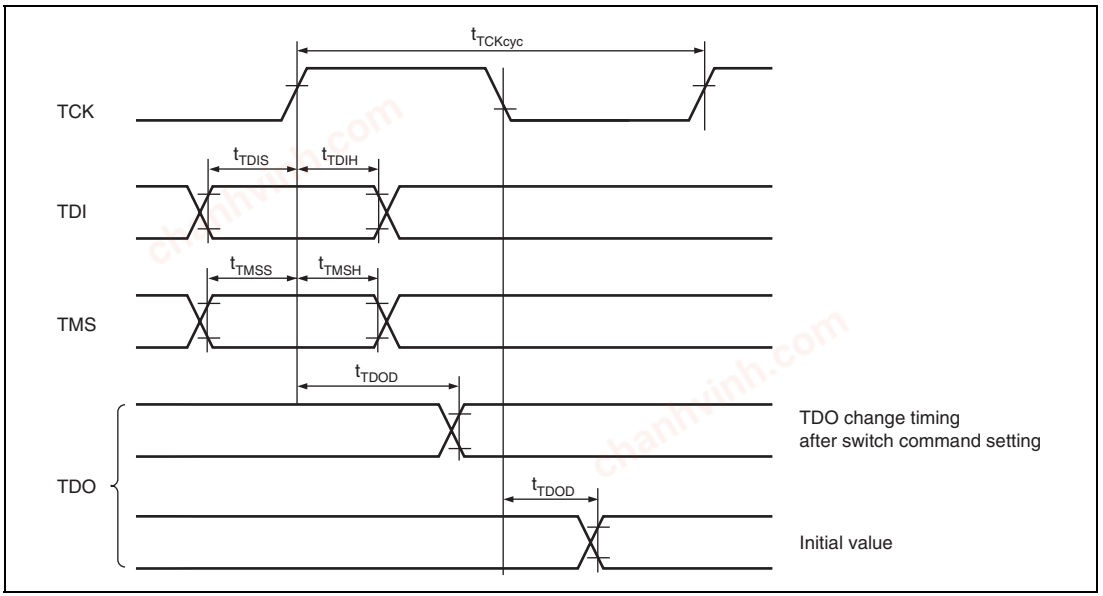

Figure 52.85 Data Transfer Timing

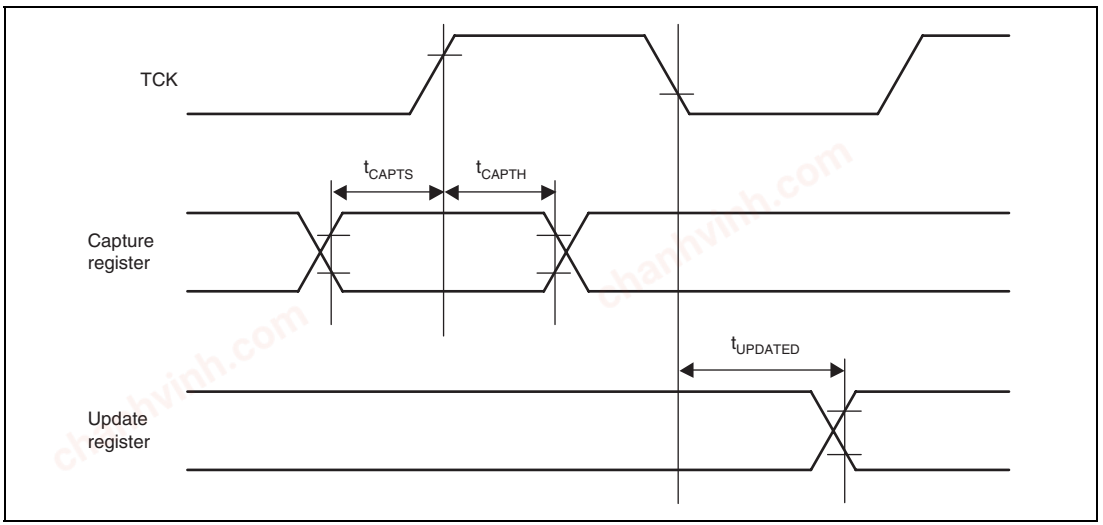

Figure 52.86 Data Transfer Timing

chanhvinh.com

52.4.23 AC Characteristics Measurement Conditions

- I/O signal reference level: $PV_{CC}/2$ (PV_{CC} = 3.0 to 3.6 V, V_{CC} = 1.15 to 1.35 V)
- Input pulse level: PV_{CC}
- Input rise and fall times: 1 ns

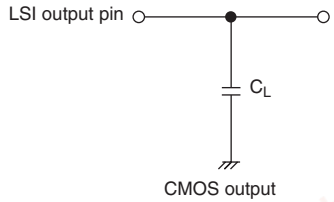

Note: C_L is the total value that includes the capacitance of measurement tools.
C_L = 30 pF

Figure 52.87 Output Load Circuit

chanhvinh.com

52.5 A/D Converter Characteristics

Conditions: V_{CC} = $PLLV_{CC}$ = $USBDV_{CC}$ = $USBUV_{CC}$ = 1.15 to 1.35 V,
PV_{CC} = $USBDPV_{CC}$ = 3.0 to 3.6 V, AV_{CC} = 3.0 to 3.6 V, $USBAV_{CC}$ = 1.15 to 1.35 V,
$USBAPV_{CC}$ = 3.0 to 3.6 V, $VDAV_{CC}$ = 3.0 to 3.6 V, V_{SS} = $PLLV_{SS}$ = AV_{SS} = $USBDV_{SS}$ = $USBAV_{SS}$ = $USBDPV_{SS}$ = $USBAPV_{SS}$ = $USBUV_{SS}$ = $VDAV_{SS}$ = 0 V,
T_a = –20 to 85 °C (regular specifications), –40 to 85 °C (wide-range specifications)

Note: SH7269 (BGA) Group products do not have the $USBDV_{CC}$, $USBUV_{CC}$, $USBDPV_{CC}$, $PLLV_{SS}$, $USBDV_{SS}$, $USBAV_{SS}$, $USBUV_{SS}$, $USBDPV_{SS}$, and $USBAPV_{SS}$ pins.

Table 52.29 A/D Converter Characteristics

Item	Min.	Typ.	Max.	Unit
Resolution	10	10	10	bits
Conversion time	6	—	—	µs
Analog input capacitance	—	—	20	pF
Permissible signal-source impedance	—	—	5	kΩ
Nonlinearity error	—	—	±3.0*	LSB
Offset error	—	—	±2.0*	LSB
Full-scale error	—	—	±2.0*	LSB
Quantization error	—	—	±0.5*	LSB
Absolute accuracy	—	—	±5.0	LSB

Note: * Reference values

chanhvinh.com

52.6 Video Characteristics of A/D Converter for the Input of Video Signals

Conditions: V_{CC} = $PLLV_{CC}$ = $USBDV_{CC}$ = $USBUV_{CC}$ = 1.15 to 1.35 V,
PV_{CC} = $USBDPV_{CC}$ = 3.0 to 3.6 V, AV_{CC} = 3.0 to 3.6 V, $USBAV_{CC}$ = 1.15 to 1.35 V,
$USBAPV_{CC}$ = 3.0 to 3.6 V, $VDAV_{CC}$ = 3.0 to 3.6 V, V_{SS} = $PLLV_{SS}$ = AV_{SS} = $USBDV_{SS}$ = $USBAV_{SS}$ = $USBDPV_{SS}$ = $USBAPV_{SS}$ = $USBUV_{SS}$ = $VDAV_{SS}$ = 0 V,
T_a = –20 to 85 °C (regular specifications), –40 to 85 °C (wide-range specifications)

Note: SH7269 (BGA) Group products do not have the $USBDV_{CC}$, $USBUV_{CC}$, $USBDPV_{CC}$, $PLLV_{SS}$, $USBDV_{SS}$, $USBAV_{SS}$, $USBUV_{SS}$, $USBDPV_{SS}$, and $USBAPV_{SS}$ pins.

Table 52.30 Characteristics of A/D Converter for the Input of Video Signals (Reference Voltage)

Item	Min.	Typ.	Max.	Unit	Test Conditions
Reference voltage (top)	—	2.0	—	V	
Reference voltage (bottom)	—	1.0	—	V	

Table 52.31 Characteristics of A/D Converter for the Input of Video Signals (Clamping)

Item	Min.	Typ.	Max.	Unit	Test Conditions
Clamping voltage level	—	1.0	—	V	Clamping to the VRB voltage
Sink current	—	10	—	µA	
Source current	—	1.0	—	mA	

Table 52.32 Characteristics of A/D Converter for the Input of Video Signals (PGA-Related)

Item	Min.	Typ.	Max.	Unit	Test Conditions
Number of gain steps	—	32	—	step	
Gain step width	—	0.2	—	dB	
Minimum gain	—	1.835	—	dB	
Maximum gain	—	8.023	—	dB	

chanhvinh.com

Table 52.33 Characteristics of A/D Converter for the Input of Video Signals (ADC)

Item	Min.	Typ.	Max.	Unit	Test Conditions
Resolution	—	10	—	bit	
A/D conversion range	—	0.2	—	Vpp	(VRT − VRB) × 2
Integral linearity error	—	—	±5.0	LSB	ADC + PGA fs = 27 MHz
Differential linearity error	—	—	±2.0	LSB	ADC + PGA fs = 27 MHz
S/N	—	54*	—	dB	fin = 1MHz, fs = 27 MHz PGA_GAIN = 01000
S/(N + D)	—	51*	—	dB	fin = 1MHz, fs = 27 MHz PGA_GAIN = 01000

Note: * Reference value.

chanhvinh.com

Section 53 States and Handling of Pins

This section describes pin states in each operating mode and how to handle pins.

53.1 Pin States

Table 53.1 shows the pin states in each operating mode.

As for the input/output functions, input buffers are listed on the upper column and output buffers on the lower column.

In addition, table 53.2 shows the pin states while the bus mastership is released, which differ from the states in the normal state.

Table 53.1 Pin States

Pin Function		Pin State						
				Pin State Retained*2			Power-Down State	
				EBUSKEEPE*3 (Other than States at Right)				
Type	Pin Name	Normal State (Other than States at Right)	Power-On Reset*1	0	1	Power-On Reset*4	Deep Standby Mode	Software Standby Mode
Clock	EXTAL*6	I	I	I			I/Z*5	I
	XTAL*6	O	O	O			O/L*5	O/L*5
	CKIO	O/Z*7	O	O	O/Z*7		O/Z*7	O/Z*7
	AUDIO_CLK	I	—	—			Z	Z
	AUDIO_X1*6	I/Z*8	I	I			Z	Z
	AUDIO_X2*6	O/L*8	O	O			L	L
	AUDIO_XOUT	O/L*8	—	O/Z*9*16			O/Z*9*16	L/Z*9
System control	$\overline{\text{RES}}$	I	I	I			I	I
	$\overline{\text{WDTOVF}}$	O	—	H			H	H
	$\overline{\text{BREQ}}$	I	—	—			Z	Z
	$\overline{\text{BACK}}$	O	—	Z			Z	Z

chanhvinh.com

Pin Function				Pin State					
						Pin State Retained*2		Power-Down State	
						EBUSKEEPE*3 (Other than States at Right)			
Type	Pin Name			Normal State (Other than States at Right)	Power-On Reset*1	0	1	Power-On Reset*4	Deep Standby Mode	Software Standby Mode
Operation mode control	MD_BOOT2 to MD_BOOT0			—	I	—			—	—
	MD_CLK0			—	I	—			—	—
	$\overline{\text{ASEMD}}$			I	I	I			I	I
Interrupt	NMI			I	I	I			I	I
	IRQ7 (PF19), IRQ6 (PF18), IRQ5 (PF17), IRQ4 (PF16), IRQ3, IRQ2, IRQ1 (PC7, PJ21), IRQ0 (PC5, PJ20)			I	—	—			I/Z*12	I
	IRQ7 (PG7), IRQ6 (PG6), IRQ5 (PG5), IRQ4 (PG4), IRQ1 (PG1), IRQ0 (PG0)			I	—	—			Z	I
	PINT7 to PINT0			I	—	—			Z	Z
User break controller	$\overline{\text{UBCTRG}}$			O	—	O/Z*9			O/Z*9	O/Z*9
Address bus	A25 to A21, A0			O	—	O/Z*10			O/Z*10	O/Z*10
	A20 to A2	Boot mode	0, 1	O	Z	O	O/Z*10		O/Z*10	O/Z*10
			2 to 5	O	—	O/Z*10			O/Z*10	O/Z*10
	A1	Boot mode	0	O	Z	O	O/Z*10		O/Z*10	O/Z*10
			1 to 5	O	—	O/Z*10			O/Z*10	O/Z*10
Data bus	D15 to D0	Boot mode	0, 1	I/Z	Z	I/Z		Z	Z	Z
				O/Z	Z	O/Z	Z		Z	Z
			2 to 5	I/Z	—	—			Z	Z
				O/Z	—	Z			Z	Z
	D31 to D16	Boot mode	1	I/Z	Z	I/Z		Z	Z	Z
				O/Z	Z	O/Z	Z		Z	Z
			0, 2 to 5	I/Z	—	—			Z	Z
				O/Z	—	Z			Z	Z

chanhvinh.com

Pin Function			Pin State						
					Pin State Retained*2			Power-Down State	
					EBUSKEEPE*3 (Other than States at Right)				
Type	Pin Name		Normal State (Other than States at Right)	Power-On Reset*1	0	1	Power-On Reset*4	Deep Standby Mode	Software Standby Mode
Bus control	$\overline{CS0}$	Boot mode 0, 1	O	Z	O	H/Z*10		H/Z*10	H/Z*10
		Boot mode 2 to 5	O	—	H/Z*10			H/Z*10	H/Z*10
	$\overline{CS5}$ to $\overline{CS1}$, $\overline{CE1A}$, $\overline{CE2A}$		O	—	H/Z*10			H/Z*10	H/Z*10
	$\overline{RD}$	Boot mode 0, 1	O	Z	O	H/Z*10		H/Z*10	H/Z*10
		Boot mode 2 to 5	O	—	H/Z*10			H/Z*10	H/Z*10
	RD/$\overline{WR}$		O	—	H/Z*10			H/Z*10	H/Z*10
	$\overline{BS}$		O	—	H/Z*10			H/Z*10	H/Z*10
	$\overline{WAIT}$		I	—	—			Z	Z
	$\overline{WE3}$/$\overline{ICIOWR}$/$\overline{AH}$/DQMUU, $\overline{WE2}$/$\overline{ICIORD}$/DQMUL, $\overline{WE1}$/DQMLU/$\overline{WE}$, $\overline{WE0}$/DQMLL		O	—	H/Z*10			H/Z*10	H/Z*10
	$\overline{RAS}$, $\overline{CAS}$		O	—	O/Z*11			O/Z*11	O/Z*11
	CKE		O	—	O/Z*11			O/Z*11	O/Z**11
	$\overline{IOIS16}$		I	—	—			Z	Z

chanhvinh.com

Pin Function		Pin State						
				Pin State Retained*2			Power-Down State	
				EBUSKEEPE*3(Other than States at Right)				
Type	Pin Name	Normal State (Other than States at Right)	Power-On Reset*1	0	1	Power-On Reset*4	Deep Standby Mode	Software Standby Mode
Direct memory access controller	DREQ0	I	—	—			Z	Z
	DACK0	O	—	O/Z*9			O/Z*9	O/Z*9
	TEND0	O	—	O/Z*9			O/Z*9	O/Z*9
Multi-function timer pulse unit 2	TCLKA to TCLKD	I	—	—			Z	Z
	TIOC0A, TIOC0B, TIOC0C (PB3, PJ18), TIOC0D (PB4, P19), TIOC1A, TIOC1B, TIOC2A, TIOC2B, TIOC3A to TIOC3D, TIOC4A to TIOC4D	I	—	—			Z	Z
		O/Z	—	O/Z*9			O/Z*9	O/Z*9
	TIOC0C (PG3), TIOC0D (PG4)	I	—	—			I/Z*12	I
		O/Z	—	O/Z*9			O/Z*9	O/Z*9
Realtime clock	RTC_X1*6	I/Z*13	I	I/Z*13			I/Z*13	I/Z*13
	RTC_X2*6	O/H*13	O	O/H*13			O/H*13	O/H*13
Serial communication interface with FIFO	TxD7 to TxD0	O/Z	—	O/Z*9			O/Z*9	O/Z*9
	RxD7 (PE7, PJ25), RxD6 to RxD1	I	—	—			Z	Z
	RxD7 (PC7)	I	—	—			I/Z*12	I
	SCK7 to SCK0	I	—	—			Z	Z
		O/Z	—	O/Z*9			O/Z*9	O/Z*9
	$\overline{\text{RTS7}}$, $\overline{\text{RTS5}}$, $\overline{\text{RTS1}}$	I	—	—			Z	Z
		O/Z	—	O/Z*9			O/Z*9	O/Z*9
	$\overline{\text{CTS7}}$, $\overline{\text{CTS5}}$, $\overline{\text{CTS1}}$	I	—	—			Z	Z
		O/Z	—	O/Z*9			O/Z*9	O/Z*9

chanhvinh.com

Pin Function			Pin State						
					Pin State Retained※2			Power-Down State	
					EBUSKEEPE※3(Other than States at Right)				
Type	Pin Name		Normal State (Other than States at Right)	Power-On Reset※1	0	1	Power-On Reset※4	Deep Standby Mode	Software Standby Mode
Renesas serial peripheral interface	MISO1, MISO0 (PJ19)		I	—	—			Z	Z
			O/Z	—	O/Z※9			O/Z※9	O/Z※9
	MISO0 (PB20)		I	—	—			Z	Z
		Boot mode 2, 4, 5	O/Z	—	O/Z※9			O/Z※9	O/Z※9
		Boot mode 3	O/Z	—	—	O/Z※9		O/Z※9	O/Z※9
	MOSI1 (MOSI0), PJ18		I	—	—			Z	Z
			O/Z	—	O/Z※9			O/Z※9	O/Z※9
	MOSI0 (PB19)		I	—	—			Z	Z
		Boot mode 2, 4, 5	O/Z	—	O/Z※9			O/Z※9	O/Z※9
		Boot mode 3	O/Z	—	—	O/Z※9		O/Z※9	O/Z※9
	RSPCK1, RSPCK0 (PJ16)		I	—	—			Z	Z
			O/Z	—	O/Z※9			O/Z※9	O/Z※9
	RSPCK0 (PB17)		I	—	—			Z	Z
		Boot mode 2, 4, 5	O/Z	—	O/Z※9			O/Z※9	O/Z※9
		Boot mode 3	O/Z	—	—	O/Z※9		O/Z※9	O/Z※9
	SSL10, SSL00 (PJ17)		I	—	—			Z	Z
			O/Z	—	O/Z※9			O/Z※9	O/Z※9
	SSL00 (PB18)		I	—	—			Z	Z
		Boot mode 2, 4, 5	O/Z	—	O/Z※9			O/Z※9	O/Z※9
		Boot mode 3	O/Z	—	—	O/Z※9		O/Z※9	O/Z※9
Renesas quad serial peripheral interface	QIO3_1, QIO3_0, QIO2_1,QIO2_0, QMI_1/QIO1_1, QMI_1/QIO0_0, QMO_1/QIO0_1, QMO_0/QIO0_0		I	—	—			Z	Z
			O/Z	—	O/Z※9			O/Z※9	O/Z※9
	QSPCLK_1, QSPCLK_0		O/Z	—	O/Z※9			O/Z※9	O/Z※9
	QSSL_1, QSSL_0		O/Z	—	O/Z※9			O/Z※9	O/Z※9

chanhvinh.com

Pin Function		Pin State						
				Pin State Retained*2			Power-Down State	
				EBUSKEEPE*3(Other than States at Right)				
Type	Pin Name	Normal State (Other than States at Right)	Power-On Reset*1	0	1	Power-On Reset*4	Deep Standby Mode	Software Standby Mode
SPI multi I/O bus controller	SPBIO3_1, SPBIO3_0, SPBIO2_1,SPBIO2_0, SPBMI_1/SPBIO1_1, SPBMI_0/SPBIO1_0, SPBMO_1/SPBIO0_1, SPBMO_0/SPBIO0_0	I	—	—			Z	Z
		O/Z	—	O/Z*9			O/Z*9	O/Z*9
	SPBCLK, SPBSSL	O/Z	—	O/Z*9			O/Z*9	O/Z*9
I2C bus interface 3	SCL3 to SCL0	I	—	—			Z	Z
		O/Z	—	Z			Z	Z
	SDA3 to SDA0	I	—	—			Z	Z
		O/Z	—	Z			Z	Z
Serial sound interface	SSITxD0	O	—	O/Z*9			O/Z*9	O/Z*9
	SSIRxD0	I	—	—			Z	Z
	SSIDATA5 to SSIDATA1	I	—	—			Z	Z
		O/Z	—	O/Z*9			O/Z*9	O/Z*9
	SSISCK5, SSISCK4, SSISCK2 to SSISCK0	I	—	—			Z	Z
		O/Z	—	O/Z*9			O/Z*9	O/Z*9
	SSISCK3	I	—	—			O/Z*12	Z
		O/Z	—	O/Z*9			O/Z*9	O/Z*9
	SSIWS5, SSIWS4, SSIWS2 to SSIWS0	I	—	—			Z	Z
		O/Z	—	O/Z*9			O/Z*9	O/Z*9
	SSIWS3	I	—	—			O/Z*12	Z
		O/Z	—	O/Z*9			O/Z*9	O/Z*9
Serial I/O with FIFO	SIOFSCK	I	—	—			Z	Z
		O/Z	—	O/Z*9			O/Z*9	O/Z*9
	SIOFSYNC	I	—	—			Z	Z
		O/Z	—	O/Z*9			O/Z*9	O/Z*9
	SIOFTxD	O/Z	—	O/Z*9			O/Z*9	O/Z*9
	SIOFRxD	I	—	—			Z	Z

chanhvinh.com

Pin Function				Pin State					
					Pin State Retained*2			Power-Down State	
					EBUSKEEPE*3(Other than States at Right)				
Type	Pin Name			Normal State (Other than States at Right)	Power-On Reset*1	0	1	Power-On Reset*4	Deep Standby Mode	Software Standby Mode
Controller area network	CTx2 to CTx0			O	—	O/Z*9			O/Z*9	O/Z*9
	CRx2 (PJ20), CRx1, CRx0			I	—	—			I/Z*12	I
	CRx2 (PB21)			I	—	—			Z	Z
IEBus™ controller	IETxD			O	—	O/Z*9			O/Z*9	O/Z*9
	IERxD			I	—	—			Z	Z
Renesas SPDIF interface	SPDIF_OUT			O	—	O/Z*9			O/Z*9	O/Z*9
	SPDIF_IN			I	—	—			Z	Z
A/D converter	AN7 to AN0			I	—	—			Z	Z
	$\overline{\text{ADTRG}}$			I	—	—			Z	Z
NAND flash memory controller	FRB			I	—	—			I/Z*12	I
	$\overline{\text{FCE}}$			O	—	O/Z*9			O/Z*9	O/Z*9
	FALE	Boot mode	0, 1, 3 to 5	O	—	O/Z*9			O/Z*9	O/Z*9
			2	O	—	—	O/Z*9		O/Z*9	O/Z*9
	$\overline{\text{FRE}}$	Boot mode	0, 1, 3 to 5	O	—	O/Z*9			O/Z*9	O/Z*9
			2	O	—	—	O/Z*9		O/Z*9	O/Z*9
	FCLE	Boot mode	0, 1, 3 to 5	O	—	O/Z*9			O/Z*9	O/Z*9
			2	O	—	—	O/Z*9		O/Z*9	O/Z*9
	$\overline{\text{FWE}}$	Boot mode	0, 1, 3 to 5	O	—	O/Z*9			O/Z*9	O/Z*9
			2	O	—	—	O/Z*9		O/Z*9	O/Z*9
	NAF7 to NAF0			I	—	—			Z	Z
		Boot mode	0, 1, 3 to 5	O/Z	—	O/Z*9			O/Z*9	O/Z*9
			2	O/Z	—	—	O/Z*9		O/Z*9	O/Z*9

chanhvinh.com

Pin Function		Pin State						
				Pin State Retained*2			Power-Down State	
				EBUSKEEPE*3(Other than States at Right)				
Type	Pin Name	Normal State (Other than States at Right)	Power-On Reset*1	0	1	Power-On Reset*4	Deep Standby Mode	Software Standby Mode
USB 2.0 host/ function module	DP, DM	I/Z	Z	I/Z			Z	I/Z
		O/Z	Z	O/Z			Z	O/Z
	VBUS	I	I	I			I	I
	REFRIN	I	I	I			I	I
	USB_X1*6	I	I	I			Z	Z
	USB_X2*6	O	O	O			L	L
Video display controller 4	LCD_DATA23 to LCD_DATA0	O	—	O/Z*9			O/Z*9	O/Z*9
	LCD_TCON6 to LCD_TCON0	O	—	O/Z*9			O/Z*9	O/Z*9
	LCD_CLK	O	—	O/Z*9			O/Z*9	O/Z*9
	LCD_EXTCLK	I	—	—			Z	Z
	DV_CLK	I	—	—			Z	Z
	DV_DATA23 to DV_DATA20	I	—	—			I/Z*12	I
	DV_DATA19 to DV_DATA0	I	—	—			Z	Z
	DV_VSYNC, DV_HSYNC	I	—	—			Z	Z

chanhvinh.com

Pin Function				Pin State						
						Pin State Retained*2			Power-Down State	
						EBUSKEEPE*3 (Other than States at Right)				
Type	Pin Name			Normal State (Other than States at Right)	Power-On Reset*1	0	1	Power-On Reset*4	Deep Standby Mode	Software Standby Mode
S/D host interface	SD_CLK_0	Boot mode	0 to 3	O	—	O/Z*9			O/Z*9	O/Z*9
			4	O	—	—	O/Z*9		O/Z*9	O/Z*9
	SD_CLK_1			O	—	O/Z*9			O/Z*9	O/Z*9
	SD_CLD_0			I	—	—			Z	Z
		Boot mode	0 to 3	O/Z	—	O/Z*9			O/Z*9	O/Z*9
			4	O/Z	—	—	O/Z*9		O/Z*9	O/Z*9
	SD_CLD_1			I	—	—			Z	Z
				O/Z	—	O/Z*9			O/Z*9	O/Z*9
	SD_D3_0, SD_D2_0			I	—	—			Z	Z
		Boot mode	0 to 3	O/Z	—	O/Z*9			O/Z*9	O/Z*9
			4	O/Z	—	—	O/Z*9		O/Z*9	O/Z*9
	SD_D1_0, SD_D0_0			I	—	—			I/Z*12	I
		Boot mode	0 to 3	O/Z	—	O/Z*9			O/Z*9	O/Z*9
			4	O/Z	—	—	O/Z*9		O/Z*9	O/Z*9
	SD_D3_1 to SD_D0_1			I	—	—			Z	Z
				O/Z	—	O/Z*9			O/Z*9	O/Z*9
	SD_CD_0			I	—	—			I/Z*12	I
	SD_CD_1			I	—	—			Z	Z
	SD_WP_0			I	—	—			I/Z*12	I
	SD_WP_1			I	—	—			Z	Z

chanhvinh.com

Pin Function				Pin State						
						Pin State Retained*2			Power-Down State	
						EBUSKEEPE*3(Other than States at Right)				
Type	Pin Name			Normal State (Other than States at Right)	Power-On Reset*1	0	1	Power-On Reset*4	Deep Standby Mode	Software Standby Mode
MMC host interface	MMC_CLK	Boot mode	0 to 3	O	—	O/Z*9			O/Z*9	O/Z*9
			5	O	—	—	O/Z*9		O/Z*9	O/Z*9
	MMC_CMD			I	—	—			Z	Z
		Boot mode	0 to 3	O/Z	—	O/Z*9			O/Z*9	O/Z*9
			5	O/Z	—	—	O/Z*9		O/Z*9	O/Z*9
	MMC_D3, MMC_D2			I	—	—			Z	Z
		Boot mode	0 to 3	O/Z	—	O/Z*9			O/Z*9	O/Z*9
			5	O/Z	—	—	O/Z*9		O/Z*9	O/Z*9
	MMC_D1, MMC_D0			I	—	—			I/Z*12	I
		Boot mode	0 to 3	O/Z	—	O/Z*9			O/Z*9	O/Z*9
			5	O/Z	—	—	O/Z*9		O/Z*9	O/Z*9
	MMC_D7 to MMC_D4			I	—	—			Z	Z
				O/Z	—	O/Z*9			O/Z*9	O/Z*9
	MMC_CD			I	—	—			I/Z*12	I
Sound generator	SGOUT_3 to SGOUT_0			O	—	O/Z*9			O/Z*9	O/Z*9
Video decoder	VIDEO_X1*6			I	I	I			Z	Z
	VIDEO_X2*6			O	O	O			L	L
	VIN1, VIN2			I	Z	I			Z	I

chanhvinh.com

Pin Function			Pin State						
					Pin State Retained*2			Power-Down State	
					EBUSKEEPE*3 (Other than States at Right)				
Type	Pin Name		Normal State (Other than States at Right)	Power-On Reset*1	0	1	Power-On Reset*4	Deep Standby Mode	Software Standby Mode
General purpose I/O ports	PA1, PA0		I	—	I		Z	Z	I
			O/Z	—	O/Z*9			O/Z*9	O/Z*9
	PB22, PB21, PB16 to PB1		I	Z	I		Z	Z	Z
			O/Z	Z	O/Z*9			O/Z*9	O/Z*9
	PB20 to PB17		I	Z	I		Z	Z	Z
		Boot mode 3	O/Z	Z	O/Z	O/Z*9		O/Z*9	O/Z*9
		Boot mode 2, 4, 5	O/Z	Z	O/Z*9			O/Z*9	O/Z*9
	PC8, PC6, PC4 to PC1		I	Z	I		Z	Z	Z
			O/Z	Z	O/Z*9			O/Z*9	O/Z*9
	PC7, PC5		I	Z	I		I/Z*12	I/Z*12	I
			O/Z	Z	O/Z*9			O/Z*9	O/Z*9
	PC0		I	—	I		Z	Z	I
			O/Z	—	O/Z*9			O/Z*9	O/Z*9
	PD15 to PD4		I	Z	I		Z	Z	Z
		Boot mode 2	O/Z	Z	O/Z	O/Z*9		O/Z*9	O/Z*9
		Boot mode 3 to 5	O/Z	Z	O/Z*9			O/Z*9	O/Z*9
	PD3 to PD0		I	Z	I		Z	Z	Z
			O/Z	Z	O/Z*9			O/Z*9	O/Z*9
	PE7 to PE0		I	Z	I		Z	Z	Z
			O/Z	Z	O/Z		Z	Z	Z
	PF23 to PF20		I	Z	Z			Z	Z
		Boot mode 0 to 3	O/Z	Z	O/Z*9			O/Z*9	O/Z*9
		Boot mode 4, 5	O/Z	Z	O/Z	O/Z*9		O/Z*9	O/Z*9

chanhvinh.com

Pin Function				Pin State					
						Pin State Retained*2		Power-Down State	
						EBUSKEEPE*3(Other than States at Right)			
Type	Pin Name			Normal State (Other than States at Right)	Power-On Reset*1	0	1	Power-On Reset*4	Deep Standby Mode	Software Standby Mode
General purpose I/O ports	PF19, PF18			I	Z	I		I/Z*12	I/Z*12	I
		Boot mode	0 to 3	O/Z	Z	O/Z*9			O/Z*9	O/Z*9
			4, 5	O/Z	Z	O/Z	O/Z*9		O/Z*9	O/Z*9
	PF17, PF16			I	Z	I		I/Z*12	I/Z*12	I
		Boot mode	0 to 3, 5	O/Z	Z	O/Z*9			O/Z*9	O/Z*9
			4	O/Z	Z	O/Z	O/Z*9		O/Z*9	O/Z*9
	PF15 to PF0			I	Z	I		Z	Z	Z
				O/Z	Z	O/Z*9			O/Z*9	O/Z*9
	PG27 to PG4, PG1, PG0			I	Z	I		Z	Z	Z
				O/Z	Z	O/Z*9			O/Z*9	O/Z*9
	PG3, PG2			I	Z	I		I/Z*12	I/Z*12	I
				O/Z	Z	O/Z*9			O/Z*9	O/Z*9
	PH7 to PH0			I	Z	I		Z	Z	I
	PJ31 to PJ24, PJ19 to PJ0			I	Z	I		Z	Z	Z
				O/Z	Z	O/Z*9			O/Z*9	O/Z*9
	PJ23 to PJ20			I	Z	I		I/Z*12	I/Z*12	I
				O/Z	Z	O/Z*9			O/Z*9	O/Z*9

chanhvinh.com

Pin Function		Pin State					
				Pin State Retained*2			Power-Down State
				EBUSKEEPE*3 (Other than States at Right)			
Type	Pin Name	Normal State (Other than States at Right)	Power-On Reset*1	0	1	Power-On Reset*4	Deep Standby Mode	Software Standby Mode
Motor control PWM timer	PWM1A, PWM1B, PWM1C, PWM1D, PWM1E, PWM1F, PWM1G, PWM1H, PWM2A, PWM2B, PWM2C, PWM2D, PWM2E, PWM2F, PWM2G, PWM2H	O	—	O/Z*9			O/Z*9	O/Z*9
User debugging inter-face*15	$\overline{\text{TRST}}$	I	I	I			Z	I
	TCK	I	I	I			Z	I
	TDI	I	I	I			Z	I
	TDO	O/Z*14	O/Z*14	O/Z*14			O/Z*14	O/Z*14
	TMS	I	I	I			Z	I
Emulator *15	$\overline{\text{AUDSYNC}}$	—	—	—			—	—
	AUDCK	—	—	—			—	—
	AUDATA3 to AUDATA0	—	—	—			—	—
	$\overline{\text{ASEBRKAK}}$/$\overline{\text{ASEBRK}}$	Z	Z	Z			Z	Z

chanhvinh.com

Table 53.2 Pin States while the Bus Mastership is Released

	Pin Function	Pin State
Type	**Pin Name**	**Bus Mastership Release**
Clock	CKIO	O/Z*7
System control	$\overline{\text{BREQ}}$	I
	$\overline{\text{BACK}}$	L
Address bus	A25 to A0	Z
Data bus	D31 to D0	Z
Bus control	$\overline{\text{CS5}}$ to $\overline{\text{CS0}}$, $\overline{\text{CE1A}}$, $\overline{\text{CE2A}}$	Z
	$\overline{\text{RD}}$	Z
	RD/$\overline{\text{WR}}$	Z
	$\overline{\text{BS}}$	Z
	$\overline{\text{WAIT}}$	Z
	$\overline{\text{WE3}}$/$\overline{\text{ICIOWR}}$/$\overline{\text{AH}}$/DQMUU, $\overline{\text{WE2}}$/$\overline{\text{ICIORD}}$/DQMUL, $\overline{\text{WE1}}$/DQMLU/$\overline{\text{WE}}$, $\overline{\text{WE0}}$/DQMLL	Z
	$\overline{\text{RAS}}$, $\overline{\text{CAS}}$	O/Z*11
	CKE	O/Z*11
NAND flash memory controller	FALE	Z
	$\overline{\text{FRE}}$	Z
	FCLE	Z
	$\overline{\text{FWE}}$	Z
	NAF7 to NAF0	Z

[Legend]

I: Input

O: Output

H: High-level output

L: Low-level output

Z: High-impedance

Notes: 1. Indicates the power-on reset by low-level input to the $\overline{\text{RES}}$ pin. The pin states after a power-on reset by the user debugging interface reset assert command or the watchdog timer overflow is the same as the initial pin states at normal operation (see section 48, General Purpose I/O Ports).

chanhvinh.com

2. After the chip has shifted to the power-on reset state from deep standby mode by the input on any of pins NMI, PC8 to PC5, PJ3, and PJ1, the pins retain the state until the IOKEEP bit in the deep standby cancel source flag register (DSFR) is cleared (see section 49, Power-Down Modes).
3. The EBUSKEEPE bit in deep standby control register (DSTCR) (see section 49, Power-Down Modes).
4. This LSI enters the power-on reset state for a certain period after recovery from deep standby control mode (see section 49, Power-Down Modes).
5. Depends on the setting of the RCKSEL bit in the realtime clock control register 5 (RCR5) (see section 15, Realtime Clock).
6. When pins for the connection with a crystal resonator are not used, the input pins (EXTAL, RTC_X1, AUDIO_X1, USB_X1, and VIDEO_X1) must be fixed (pull-up/down resistor, power supply, or ground.) and the output pins (XTAL, RTC_X2, AUDIO_X2, USB_X2, and VIDEO_X2) must be open.
7. Depends on the setting of the CKOEN bit in the frequency control register (FRQCR) of the clock pulse generator (see section 5, Clock Pulse Generator).
8. Depends on the setting of the AXTALE bit in the software reset control register (SWRSTCR) (see section 49, Power-Down Modes).
9. Depends on the setting of the HIZ bit in the standby control register 3 (STBCR3) (see section 49, Power-Down Modes).
10. Depends on the setting of the HIZMEM bit in the common control register (CMNCR) of the bus state controller (see section 10, Bus State Controller).
11. Depends on the setting of the HIZCNT bit in the common control register (CMNCR) of the bus state controller (see section 10, Bus State Controller).
12. Depends on the setting of the corresponding bit in the deep standby cancel source select register (DSSSR) (see section 49, Power-Down Modes).
13. Depends on the setting of the RTCEN bit in the realtime clock control register 2 (RCR2) (see section 15, Realtime Clock).
14. Z when the TAP controller of the user debugging interface is neither the Shift-DR nor Shift-IR state.
15. These are the pin states in product chip mode ($\overline{\text{ASEMD}}$ = H). See the Emulation Manual for the pin states in ASE mode ($\overline{\text{ASEMD}}$ = L).
16. When this is an output, the output is fixed to either the High or Low level. There is no oscillation.

chanhvinh.com

53.2 Treatment of Unused Pins

How unused pins are to be handled is indicated below.

Table 53.3 Handling of Unused Pins (Except for User Debugging Interface and Emulator Interface Pins)

Pin Name	Handling
NMI	Fix this pin at a high level (pull up or connect to a power supply).
DP, DM, VBUS	— Connect these pins to USBDPVss (SH7268/SH7269 (QFP)). — Connect them to Vss (SH7269 (BGA)).
REFRIN	Connect this pin, via a 5.6 kΩ ± 20 % resistor, to USBAPVcc.
1.2-V power dedicated to the USB (USBAVcc, USBDVcc, USBUVcc)	Supply power at 1.2 V. Note: SH7269 (BGA) Group products do not have pins USBDVcc and USBUVcc.
3.3-V power dedicated to the USB (USBAPVcc, USBDPVcc)	Supply power at 3.3 V. Note: SH7269 (BGA) Group products do not have the USBDPVcc pin.
Dedicated USB ground (USBAPVss, USBDPVss, USBAVss, USBDVss, USBUVss)	Connect to ground. Note: SH7269 (BGA) Group products do not have the dedicated USB ground pins.
AVref	Connect this pin to AVcc.
Dedicated A/D power (AVcc)	Supply power at 3.3 V.
Dedicated A/D ground (AVss)	Connect to ground.
Dedicated A/D power for input of video signals (VDAVcc)	Supply power at 3.3 V.
Dedicated A/D ground for input of video signals (VDAVss)	Connect to ground.
BIAS	Connect this pin, via a 24 kΩ ± 10 % resistor, to VDAVss.
VIN1, VIN2, VRT, VRB	Open-circuit
Dedicated input pins other than those listed above	Fix the level on the pins (pull them up or down, or connect them to the power supply or ground level).

chanhvinh.com

Pin Name	Handling
Input/output pins other than those listed above	Make the input-pin settings and then fix the level (pull them up or down); alternatively, make the output-pin settings and leave the pins open-circuit.
Dedicated output pins	Open-circuit

Note: We recommend that the values of pull-up or pull-down resistors are in the range from 4.7 kΩ to 100 kΩ.

Table 53.4 Handling of Pins (when User Debugging Interface is not Used in Product Chip Mode)

Pin	Handling
$\overline{\text{ASEMD}}$	Fix this pin at a high level (pull up or connect to the power supply).
$\overline{\text{TRST}}$	Fix this pin at a low level (pull down or connect to the ground level).
TCK, TMS, TDI	Fix the level on the pins (pull them up or down, or connect them to the power supply or ground level).
TDO, $\overline{\text{ASEBRKAK}}$/$\overline{\text{ASEBRK}}$	Open-circuit

Notes: 1. When using the user debugging interface, handle these pins as described in the manual for the emulator.
2. We recommend that the values of pull-up or pull-down resistors are in the range from 4.7 kΩ to 100 kΩ.

chanhvinh.com

53.3 Handling of Pins in Deep Standby Mode

How pins are to be handled in deep standby mode is indicated below.

For the states of pins in deep standby mode, refer to the corresponding items under section, 53.1, Pin States. Handling of unused pins as described under section 53.2, Treatment of Unused Pins, also applies in deep standby mode.

Table 53.5 Handling of Pins in Deep Standby Mode

Pin	Handling
1.2-V power (Vcc, USBDVcc, USBUVcc, USBAVcc)	Supply power at 1.2 V. Note: SH7269 (BGA) Group products do not have pins USBDVcc and USBUVcc.
3.3-V power (PVcc, AVcc, USBDPVcc, USBAPVcc, PLLVcc, VDAVcc)	Supply power at 3.3 V. Note: SH7269 (BGA) Group products do not have the USBDPVcc pin.
Ground (Vss, PLLVss, USBDVss, USBUVss, USBAVss, AVss USBDPVss, USBAPVss, VDAVss)	Connect to ground. Note: SH7269 (BGA) Group products do not have the PLLVss, USBDVss, USBAVss, USBUVss, USBDPVss, and USBAPVss pins.
VBUS	Fix the level on this pin (pull it up or down, or connect it to the power supply or ground level) or open circuit. However, note that current as indicated in table 52.2, DC Characteristics (2) [Current Consumption] SH7268/SH7269 (QFP) will be drawn by the pin fixed to the high level.
REFRIN	Connect this pin to USBAPVss via 5.6 kΩ ± 1 % resistor.
DP, DM	Fix the level on the pins (pull them up or down, or connect them to the power supply or ground level) or open circuit.
AVref	Fix the level on this pin (from 3.0 V to AVcc)
BIAS	Connect this pin to VDAVss via 24 kΩ ± 1 % resistor.
VRT, VRB	Connect these pins to VDAVss via 0.1-μF resistor.
VIN1, VIN2	Fix the level on the pins (pull them up or down, or connect them to the power supply or ground level) or open circuit.

chanhvinh.com

Pin	Handling
EXTAL, RTC_X1, AUDIO_X1, USB_X1, VIDEOX1	Connect the pins to the crystal oscillator or the clock-input signal, or to a fixed level (pull them up or down, or connect them to the power supply or ground level)
XTAL, RTC_X2, AUDIO_X2, USB_X2, VIDEO_X2	Connect the pins to the crystal oscillator or open circuit.
Dedicated input pins other than those listed above	Fix the level on the pins (pull them up or down, or connect them to the power supply or ground level).
Input/output pins (other than those listed above) in the input state	Fix the level on the pins (pull them up or down).
Input/output pins (other than those listed above) in the high-impedance state	Fix the level on the pins (pull them up or down) or open circuit.
Input/output pins (other than those listed above) in the output state	Open-circuit
Dedicated output pins other than those listed above	Open-circuit

Note: We recommend that the values of pull-up or pull-down resistors are in the range from 4.7 kΩ to 100 kΩ.

chanhvinh.com

53.4 Recommended Combination of Bypass Capacitor

Mount a multilayer ceramic capacitor between a pair of the power supply pins as a bypass capacitor. These capacitors must be placed as close as the power supply pins of the LSI. The capacitance of the capacitors should be used 0.1 µF to 0.33 µF (recommended values). For details of the capacitor related to the crystal resonator, see section 5, Clock Pulse Generator.

Figures 53.1 and 53.2 are examples of externally allocated capacitors in the SH7268 Group and SH7269 (QFP) Group, respectively. Table 53.6 lists the correspondences between power-supply and ground pins for the connection of external capacitors in the case of SH7269 Group products (in BGA).

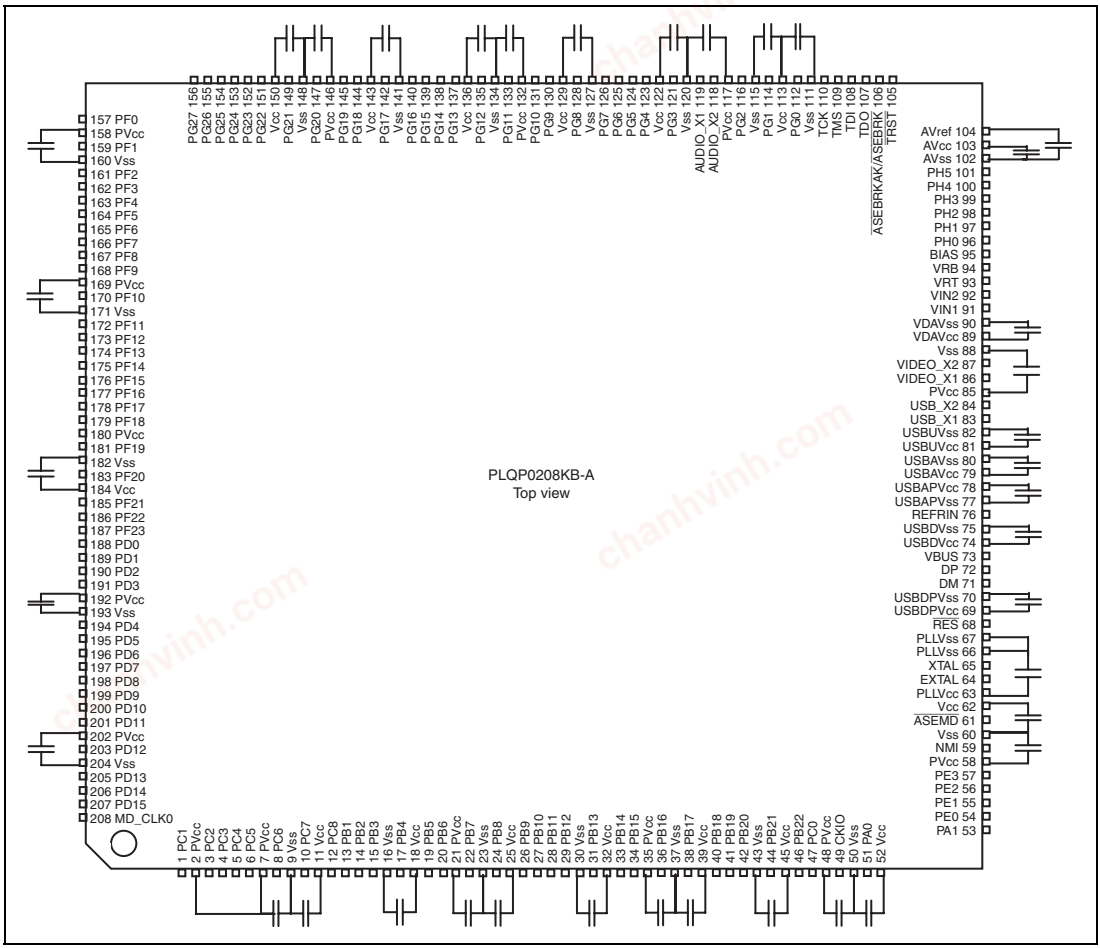

Figure 53.1 Example of Externally Allocated Capacitors in the SH7268 Group

chanhvinh.com

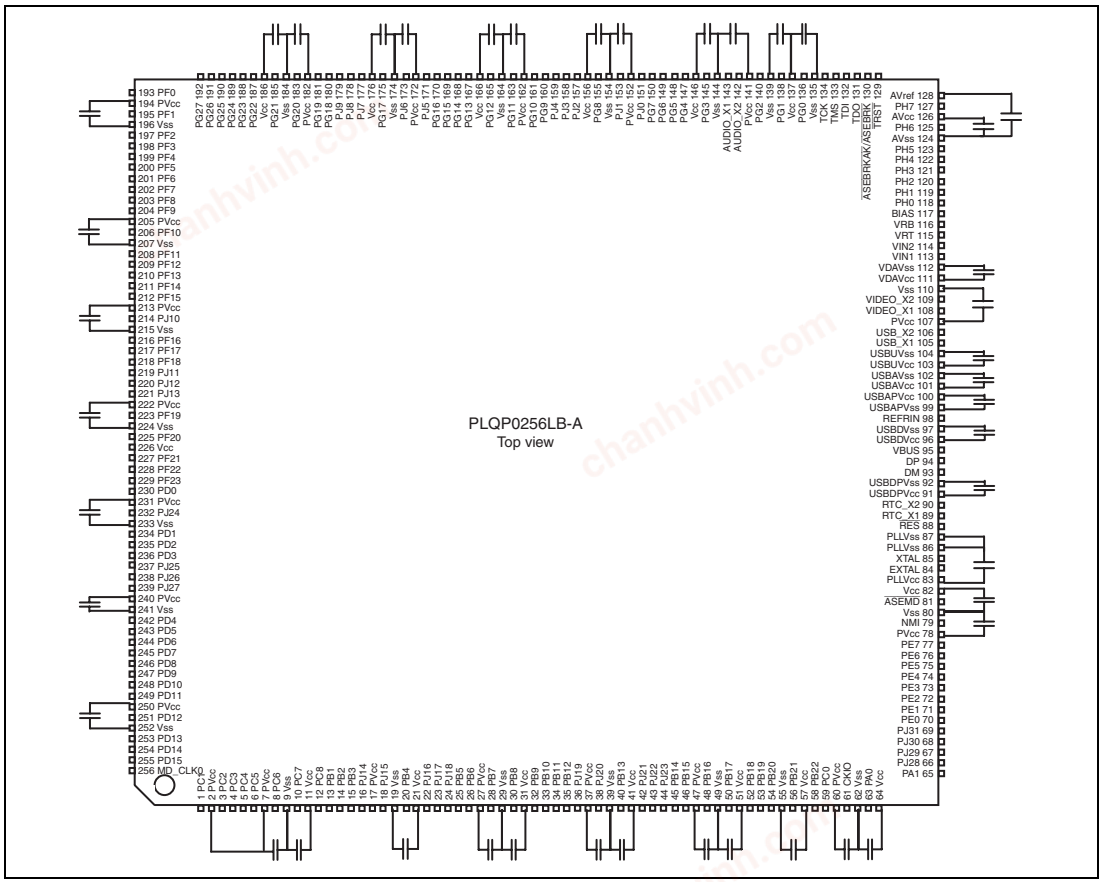

Figure 53.2 Example of Externally Allocated Capacitors in the SH7269 (QFP) Group

chanhvinh.com

Table 53.6 Correspondences between Power-Supply and Ground Pins for the Connection of External Capacitors: SH7269 Group in BGA

Power Supply		Ground	
Pin No.	**Pin Name**	**Pin No.**	**Pin Name**
A2, B20, C19, D5, D6, D18, E17, H4, J4, M17, N17, T4, U3, U10, V2, V10, W1	Vcc	A1, A20, B2, B19, C3, C10, C18, D4, D10, D17, J9, J10, J11, J12, K4, K9, K10, K11, K12, K17, L4, L9, L10, L11, L12, L17, M4, M9, M10, M11, M12, U1, U4, U8, U9, U12, U17, V3, V9, V13, V18, W2, W11, W19, Y1, Y7, Y13, Y20	Vss
A19, B1, B18, C2, D2, D3, D11, D12, D15, D16, E4, J17, J18, N3, N4, T17, U18, V19, W20, Y11	PVcc		
U6	PLLVcc		
V11	USBAPVcc		
V12	USBAVcc		
U13	VDAVcc	U15	VDAVss
Y18	AVcc	W18	AVss
Y19	AVref		

chanhvinh.com

Appendix

A. Package Dimensions

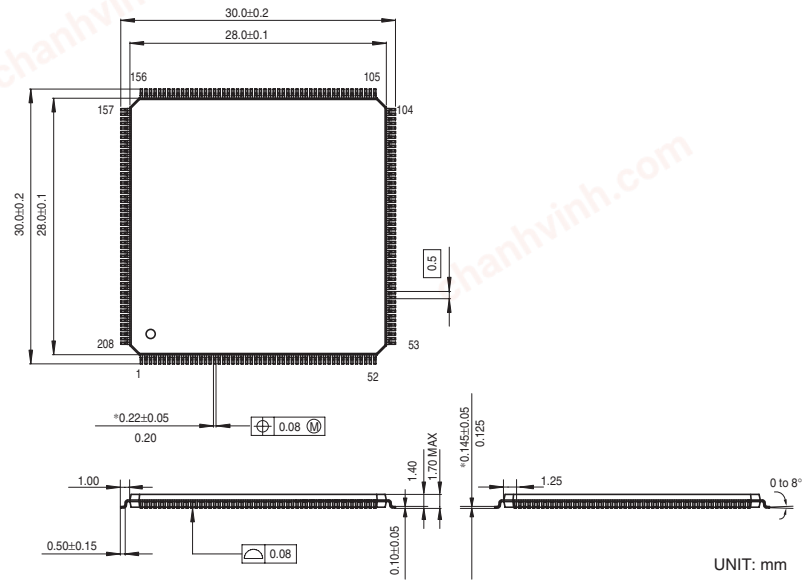

Package code	PLQP0208KB-A
JEITA code	Conforms to EDR-7311
JEDEC code	—
Mass (g)	2.7

Figure A.1 SH7268

chanhvinh.com

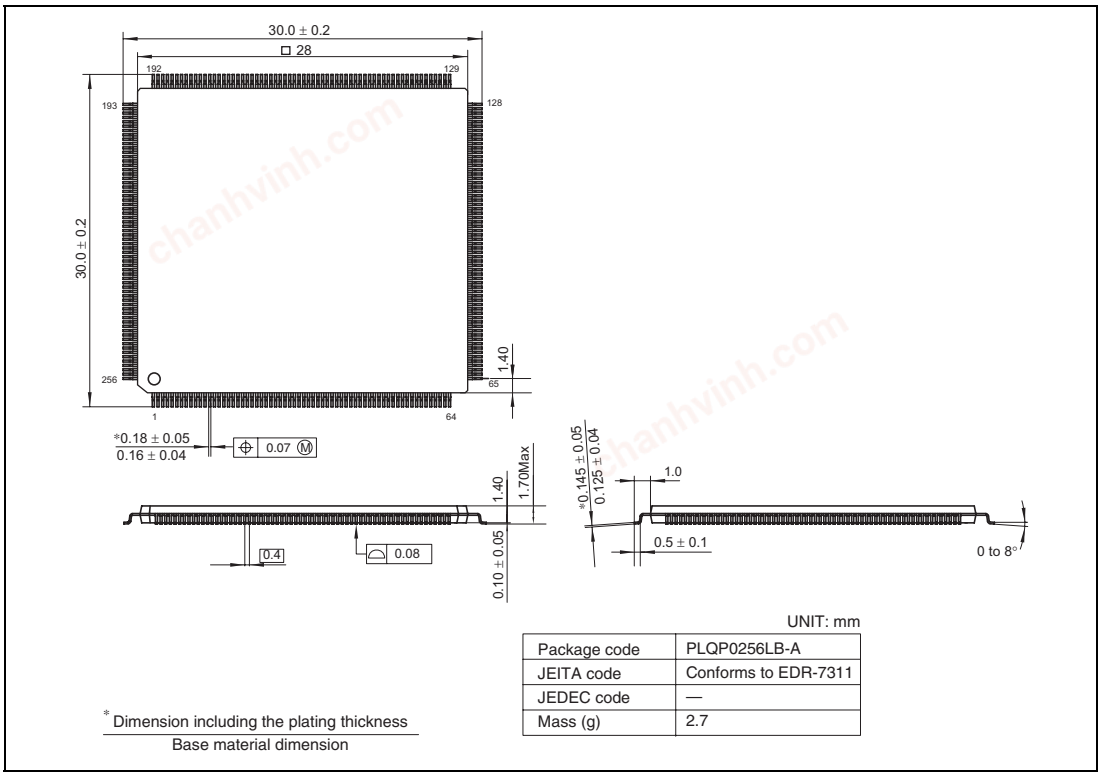

Figure A.2 SH7269 (QFP Version)

chanhvinh.com

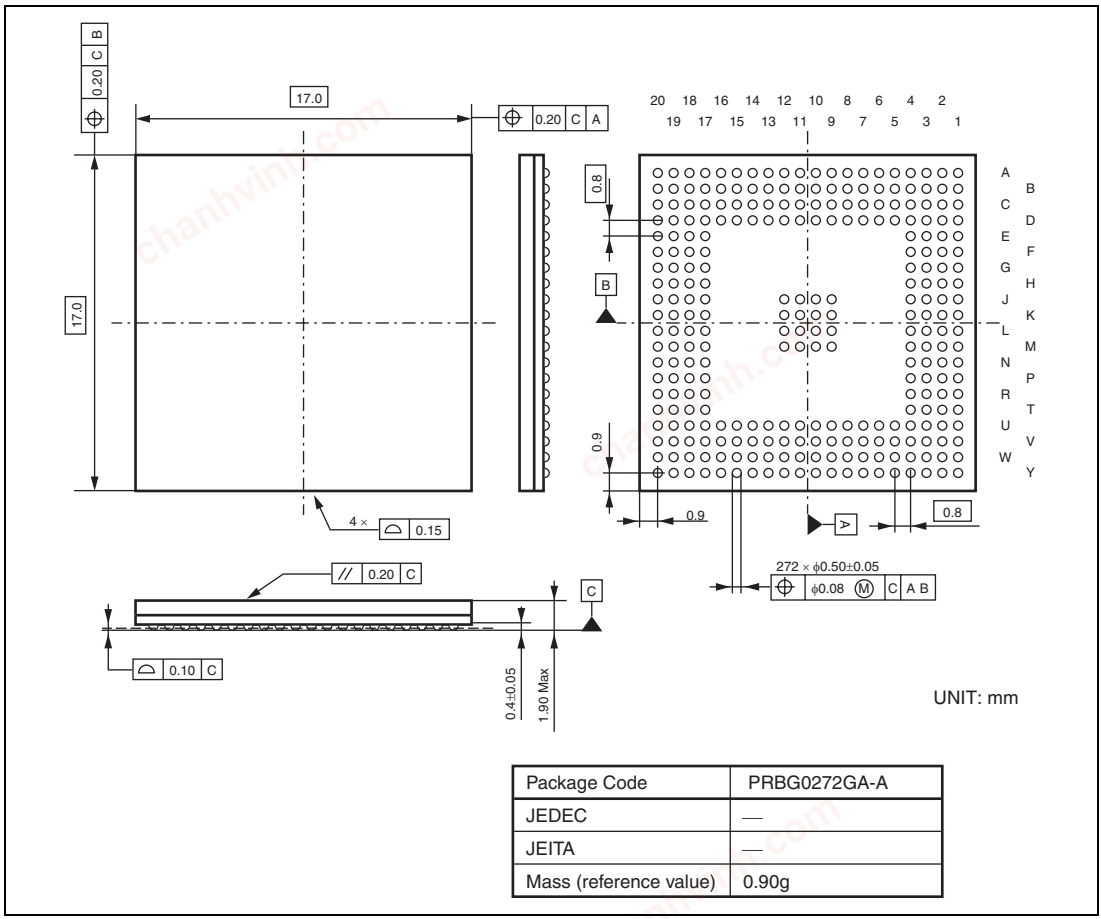

Package Code	PRBG0272GA-A
JEDEC	—
JEITA	—
Mass (reference value)	0.90g

Figure A.3 SH7269 (BGA Version)

chanhvinh.com

chanhvinh.com
chanhvinh.com
chanhvinh.com
chanhvinh.com

chanhvinh.com

Index

Numerics

(Potential) time master 1241
16-bit/32-bit displacement 67

A

A/D conversion time
(multi mode and scan mode) 1456
A/D conversion timing 1455
A/D converter 1437
A/D converter activation 629
A/D converter characteristics 3046
A/D converter start request
delaying function 622
A/D converter timing 3028
Absolute address 67
Absolute address accessing 67
Absolute maximum ratings 2957
AC characteristics 2970
AC characteristics measurement
conditions 3045
Access size and data alignment 323
Access wait control 335
Address array 248, 262
Address array read 262
Address errors 152
Address map 272
Address multiplexing 346
Address spaces of on-chip
data retention RAM 2556
Address spaces of on-chip
high-speed RAM 2555
Address spaces of on-chip
large-capacity RAM 2556
Address-array write
(associative operation) 263
Addressing modes 68
Analog input pin ratings 1462
Arithmetic operation instructions 87
Auto attenuator function 2474
Automatic decoding stop function 1427
Auto-refreshing 373
Auto-request mode 453

B

Bank active 366
Banked register and input/output
of banks 217
Baud rate generator 1139
Bit manipulation instructions 98
Bit synchronous circuit 1059
Block diagram of this LSI 17
Boot mode 115
Boundary scan 2744
Branch instructions 92
Break detection and processing 816
Break on data access cycle 241
Break on instruction fetch cycle 240
Buffering format 1428
Burst mode 467
Burst read 358
Burst ROM
(clocked asynchronous) interface 385
Burst ROM
(clocked synchronous) interface 398
Burst write 363
Bus arbitration 406
Bus state controller 267
Bus timing 2977
Bus-released state 100

chanhvinh.com

C

Cache 247
Cache operations 260
Calculating exception handling vector table addresses 146
CAN bus interface 1255
CAN interface 1161
Canceling software standby mode (watchdog timer) 714
Cascaded operation 563
Caution on period setting 643
CD-ROM decoder 1369
Changing the division ratio 135
Changing the frequency 135
Clock frequency control circuit 127
Clock operating modes 130
Clock pulse generator 125
Clock timing 2970
Clocked synchronous serial format 1049
CMCNT count timing 699
Coherency of cache and external memory or large-capacity on-chip RAM 261
Command access mode 1495
Communications protocol 1267
Compare match timer 693
Complementary PWM mode 583
Conditions for determining number of idle cycles 400
Configuration mode 1105
Configuration of controller area network 1230
Conflict between byte-write and count-up processes of CMCNT 704
Conflict between word-write and count-up processes of CMCNT 703
Conflict between write and compare-match processes of CMCNT 702
Control signal timing 2975
Controller area network 1157
Controller area network control registers 1180
Controller area network interrupt sources 1253
Controller area network mailbox registers 1201
Controller area network memory map 1163
Controller area network timer registers 1215
CPU 57
Crystal oscillator 127
$\overline{\text{CS}}$n assert period expansion 337
Cycle steal mode 466

D

Data array 248, 263
Data array read 263
Data array write 264
Data format 858
Data format in registers 62
Data formats in memory 62
Data transfer instructions 83
Data transfer with interrupt request signals 221
DC characteristics 2959
Deep power-down mode 384
Deep standby mode 2721
Definitions of A/D conversion accuracy 1459
Delayed branch instructions 65
Denormalized numbers 106
Direct memory access controller 413
Direct memory access controller interface 1254
Direct memory access controller timing 3009
Displacement accessing 67
Display out comparison unit (DISCOM) 2327

chanhvinh.com

Divider 2 127
DMA transfer flowchart 452
DREQ pin sampling timing 470
Dual address mode 462
Dual-SPI/Quad-SPI mode 946

E

ECC correction 1426
EDC checking 1427
Effective address calculation 68
Electrical characteristics 2957
Encoding 2400
Endian 323
Endian conversion for data in the input stream 1420
Equation for getting SCBRR value 776
Error detection function 870
Error marker 2416
Example of time triggered system 1245
Exception handling 141
Exception handling state 100
Exception handling vector table 144
Exception source generation immediately after delayed branch instruction 161
Exceptions triggered by instructions 157
External request mode 453
External trigger input timing 1457

F

Features of this LSI 1
Floating point operation instructions 160
Floating-point operation instructions 95
Floating-point ranges 104
Floating-point registers 107
Floating-point unit (FPU) 101
Flow of the user break operation 239
Format of double-precision floating-point number 102
Format of single-precision foating-point number 102
FPU exception sources 112
FPU-related CPU instructions 97
Full-scale error 1459

G

General illegal instructions 159
General purpose I/O ports timing 3042
General registers 57
Global base register (GBR) 59

H

Halt mode 1231
Huffman coded segment error 2417
Huffman table specification 2406

I

I²C bus format 1040
I²C bus interface 3 1021
I²C bus interface 3 timing 3022
IBUF interrupt 1433
ID reorder 1181
IEBus bit format 1278
IEBus communications protocol 1263
IEBus™ controller 1261
IERR interrupt 1433
Image renderer (IMR-LS) 2325
Immediate data 66
Immediate data accessing 66
Immediate data format 63
Influences on absolute precision 1463
Initial values of control registers 61
Initial values of general registers 61
Initial values of system registers 61
Input JPEG coded data 2415
Instruction features 64

chanhvinh.com

Instruction format 73
Instruction set 77
Integer division instructions 159
Internal arbitration for transmission 1235
Interrupt controller 167
Interrupt exception handling 156
Interrupt priority level 155
Interrupt response time 209
Interrupt sources 814
Interrupts for encoding and decoding ... 2425
Interrupts for transferring data 2426
IREADY interrupt 1433
IRQ interrupts 185
ISEC interrupt 1432
ISY interrupt 1433
ITARG interrupt 1432

J

JPEG codec unit (JCU) 2355
JPEG coded data format 2405
JPEG decoding errors 2416
Jump table base register (TBR) 59

L

List of pins of this LSI 34
Load-store architecture 64
Local acceptance filter mask (LAFM) 1173
Logic operation instructions 90
Loopback mode 890, 954
Low-power SDRAM 382
LRU 249

M

Mailbox 1160, 1164
Mailbox configuration 1172
Mailbox control 1160
Manual reset 150
Master receive operation 1043
Master transmit operation 1041
Memory-mapped cache 262
Message control field 1169
Message data fields 1174
Message receive sequence 1249
Message transmission request 1234, 1244
Micro processor interface (MPI) 1160
Module enabled mode 1105
Module standby function 2727
Module stop mode settings 2476
MOSI signal value determination during SSL negate period 852
Motor control PWM timer 2537
MPX-I/O interface 338
Multi mode 1449
Multi-function timer pulse unit 2 475
Multi-master mode operation 876
Multiply and accumulate register high (MACH) 60
Multiply and accumulate register low (MACL) 60
Multiply/multiply-and-accumulate operations 65

N

NAND flash memory controller 1465
NAND flash memory controller interrupt requests 1505
NAND type flash memory controller timing 3029
Noise filter 1053
Non-compressed modes 1093
Nonlinearity error 1459
Non-numbers (NaN) 105
Normal space interface 330
Note on using a PLL oscillation circuit ... 139

chanhvinh.com

O

Offset error 1459
On-chip peripheral module interrupts 187
On-chip peripheral module request 455
On-chip RAM 2555
OpenVG™-compliant renesas graphics processor 2353
Operation in asynchronous mode 794
Operation in clocked synchronous mode 805
Output load circuit 3045
Output pin initialization for multi-function timer pulse unit 2 660
Output waveform 2475
Overview of processing 2410

P

Package dimensions of this LSI 3071, 3072
Page conflict 2558
PCMCIA interface 393
Permissible signal source impedance 1462
Phase counting mode 573
Pin assignment of this LSI 18, 19, 20
Pin functions of this LSI 21
Pin states of this LSI 3049
PINT interrupts 186
PLL circuit 127
Power-down mode 378
Power-down modes 2671
Power-down state 100
Power-on reset 149
Power-on sequence 379
Power-on/power-off sequence 2958
Prefetch operation (only for operand cache) 258
Procedure register (PR) 60
Processing of analog input pins 1461
Product lineup of this LSI 16
Program counter (PC) 60
Program execution state 100
PWM Modes 568
PWM operation 2551

Q

Quantization error 1459
Quantization table specification 2406

R

Realtime clock 719
Receive data sampling timing and receive margin (asynchronous mode) 816
Reconfiguration of mailbox 1251
Register addresses (by functional module, in order of the corresponding section numbers) 2749
Register bank error exception handling 153, 220
Register bank errors 153
Register bank exception 220
Register banks 61, 216
Register bits 2806
Register states in each operating mode 2952
Registers
ABACK0 1209
ABACK1 1209
ACCCR1 1770
ACCCR2 1774
ACCCR3 1775
ADCCR1 1722
ADCSR 1442
ADDRA to ADDRH 1441
AFCPFCR 1796
AGCCR1 1781
AGCCR2 1784
AGCCSR1 1810
AGCCSR2 1811

chanhvinh.com

BAMR 230
BAR 229
BBR 233
BCR0 1190
BCR1 1188
BDMR 232
BDR 231
BEMPENB 1554
BEMPSTS 1572
BRCR 235
BRDYENB 1551
BRDYSTS 1568
BSBPR 2731
BSID 2738
BSIR 2731
BTGPCR 1768
BTLCR 1763
BUSWAIT 1521
CBGAINCR 1839
CBUFCTL0 1408
CBUFCTL1 1410
CBUFCTL2 1410
CBUFCTL3 1411
CBUFST0 1394
CBUFST1 1395
CBUFST2 1396
CCR 1223
CCR1 250
CCR2 252
CFIFO 1533
CFIFOCTR 1543
CFIFOSEL 1535
CHCR 427
CHROMASR1 1805
CHROMASR2 1807
CMAX_TEW 1218
CMCNT 698
CMCOR 698
CMCSR 696
CMNCR 277, 959
CMSTR 695
CRGAINCR 1840
CROMCTL0 1380
CROMCTL1 1382
CROMCTL3 1383
CROMCTL4 1384
CROMCTL5 1386
CROMEN 1378
CROMST0 1387
CROMST0M 1411
CROMST1 1388
CROMST3 1389
CROMST4 1390
CROMST5 1391
CROMST6 1392
CROMSY0 1379
CS0WCR 286, 299, 313
CS1WCR 288
CS2WCR 291, 304
CS3WCR 291, 305
CS4WCR 293, 302
CS5WCR 296, 309
CSnBCR (n = 0 to 5) 281
CTRL 1334
CYCTR 1224
D0FBCFG 1532
D0FIFO 1533
D0FIFOCTR 1543
D0FIFOSEL 1535
D1FBCFG 1532
D1FIFO 1533
D1FIFOCTR 1543
D1FIFOSEL 1535
DAR 426
DCPCFG 1582
DCPCR1 1751
DCPCR2 1753
DCPCR3 1755
DCPCR4 1756
DCPCR5 1757

chanhvinh.com

DCPCR6 1758
DCPCR7 1759
DCPCR8 1760
DCPCR9 1828
DCPCTR 1584
DCPMAXP 1583
DCPSR1 1802
DCPSR2 1803
DEVADDn 1634
DMAOR 441
DMARS0 to DMARS7 445
DMATCR 427
DOCMCLSTR 2332
DOCMCR 2330
DOCMIENR 2333
DOCMSTR 2331
DSESR 2710
DSFR 2712
DSSSR 2707
DVSTCTR 1523
FLADR 1477
FLADR2 1479
FLBSYCNT 1488
FLBSYTMR 1487
FLCMCDR 1476
FLCMDCR 1473
FLCMNCR 1470
FLDATAR 1481
FLDTCNTR 1480
FLDTFIFO 1489
FLECFIFO 1490
FLHOLDCR 1492
FLINTDMACR 1482
FLTRCR 1491
FPSCR 108
FPUL 110
FRMNUM 1573
FRQCR 132
GSR 1185
HAFCCR1 1743
HAFCCR2 1746
HAFCCR3 1748
HEAD00 1396
HEAD01 1397
HEAD02 1397
HEAD03 1398
HEAD20 1402
HEAD21 1403
HEAD22 1403
HEAD23 1404
HSYNCSR 1801
IBCR 182
IBNR 183
ICCR1 1025
ICCR2 1028
ICDRR 1038
ICDRS 1038
ICDRT 1037
ICIER 1032
ICMR 1030
ICR0 175
ICR1 177
ICR2 178
ICSR 1034
IEAR1 1288
IEAR2 1289
IECKSR 1310
IECMR 1284
IECTR 1283
IEFLG 1296
IEIER 1309
IEIET 1303
IELA1 1294
IELA2 1295
IEMA1 1291
IEMA2 1292
IEMCR 1286
IERB 1313
IERBFL 1294
IERCTL 1293

chanhvinh.com

IERSR 1305
IESA1 1289
IESA2 1290
IETB 1312
IETBFL 1290
IETSR 1299
IMR 1200
INHINT 1417
INTENB0 1547
INTENB1 1549
INTHOLD 1416
INTSTS0 1557
INTSTS1 1562
IPR01, IPR02, IPR05 to IPR26 .. 155, 172
IRQRR 179
IRR 1193
JCCMD 2360
JCDERR 2376
JCDRID 2365
JCDRIU 2364
JCDTCD 2372
JCDTCM 2371
JCDTCU 2370
JCHSZD 2369
JCHSZU 2368
JCHTN 2363
JCMOD 2359
JCQTN 2362
JCRST 2377
JCVSZD 2367
JCVSZU 2366
JIFDCNT 2385
JIFDDA 2392
JIFDDLC 2394
JIFDDOFST 2391
JIFDSA 2390
JIFDSDC 2393
JIFECNT 2378
JIFEDA 2383
JIFESA 2381
JIFESLC 2384
JIFESOFST 2382
JINTE0 2373
JINTE1 2396
JINTS0 2375
JINTS1 2398
MBIMR0 1213
MBIMR1 1213
MCR 1180
NF2CYC 1039
NRDYENB 1552
NRDYSTS 1570
NSDCR 1761
NSDSR 1804
PAIOR0 2574
PAPR0 2575
PBCR0 2586
PBCR1 2584
PBCR2 2582
PBCR3 2580
PBCR4 2578
PBCR5 2576
PBDR0 2590
PBDR1 2589
PBIOR0 2588
PBIOR1 2588
PBPR0 2592
PBPR1 2591
PCCR0 2595
PCCR1 2594
PCCR2 2593
PCDR0 2597
PCIOR0 2596
PCPR0 2598
PDCR0 2604
PDCR1 2602
PDCR2 2600
PDCR3 2599
PDDR0 2606
PDIOR0 2605

chanhvinh.com

PDPR0 2608
PECR0 2610
PECR1 2609
PEDR0 2612
PEIOR0 2611
PEPR0 2613
PFCR0 2622
PFCR1 2620
PFCR2 2619
PFCR3 2618
PFCR4 2617
PFCR5 2615
PFCR6 2614
PFDR0 2624
PFIOR0 2623
PFPR0 2626
PGCR0 2638
PGCR1 2636
PGCR2 2634
PGCR3 2632
PGCR4 2630
PGCR5 2629
PGCR6 2628
PGDR0 2642
PGDR1 2641
PGIOR0 2640
PGIOR1 2640
PGPR0 2645
PGPR1 2643
PHCR0 2647
PHCR1 2646
PHPR0 2648
PINTER 180
PIPEBUF 1602
PIPECFG 1595
PIPEMAXP 1605
PIPEnCTR 1609
PIPEnTRE 1630
PIPEnTRN 1632
PIPEPERI 1607
PIPESEL 1594
PIRR 181
PJCR0 2660
PJCR1 2658
PJCR2 2657
PJCR3 2655
PJCR4 2654
PJCR5 2652
PJCR6 2651
PJCR7 2649
PJDR0 2664
PJDR1 2663
PJIOR0 2661
PJIOR1 2661
PJPR0 2667
PJPR1 2665
PKLIMITCR 1785
PWBFR_n 2548
PWBTCR 2549
PWCNT_n 2543
PWCR_n 2541
PWCYR_n 2544
PWDTR_n 2545
PWPR_n 2543
R64CNT 723
RCR1 738
RCR2 740
RCR3 742
RCR5 743
RDAD 1353
RDAR 439
RDAYAR 735
RDAYCNT 728
RDMATCR 440
REC 1200
RFMK 1225
RFPR0 1212
RFPR1 1211
RFRH/L 744
RFTROFF 1220

chanhvinh.com

RGORCR1 1788
RGORCR2 1789
RGORCR3 1790
RGORCR4 1791
RGORCR5 1792
RGORCR6 1793
RGORCR7 1794
RHRAR 733
RHRCNT 726
RLCA 1351
RLCS 1355
RMINAR 732
RMINCNT 725
RMONAR 736
RMONCNT 729
ROMDECRST 1412
RRCA 1352
RRCS 1357
RSAR 438
RSECAR 731
RSECCNT 724
RSTSTAT 1413
RTCNT 321
RTCSR 319
RUI 1354
RUPDCR 1798
RWKAR 734
RWKCNT 727
RXPR0 1211
RXPR1 1210
RYRAR 737
RYRCNT 730
SAR
(Direct memory access controller) 426
SAR (I^2C bus interface 3) 1037
SCBRR 776
SCEMR 790
SCFCR 782
SCFDR 785
SCFRDR 759
SCFSR 768
SCFTDR 760
SCLSR 789
SCRSR 759
SCSCR 764
SCSMR 761
SCSPTR 786
SCTSR 760
SDBPR 2739
SDBSR 2732
SDCR 315
SDIR 2739
SGCR 2463
SGCSR 2465
SGLR 2467
SGSFR 2468
SGTFR 2467
SHEAD00 1398
SHEAD01 1399
SHEAD02 1399
SHEAD03 1400
SHEAD04 1400
SHEAD05 1401
SHEAD06 1401
SHEAD07 1402
SHEAD20 1404
SHEAD21 1405
SHEAD22 1405
SHEAD23 1406
SHEAD24 1406
SHEAD25 1407
SHEAD26 1407
SHEAD27 1408
SICTR 1121
SIFCTR 1133
SIIER 1131
SIMDR 1119
SIRDAR 1138
SIRDR 1125
SISCR 1135

chanhvinh.com

SISTR 1126
SITDAR 1136
SITDR 1124
SOFCFG 1555
SPBCR 966
SPBDCR 923
SPBFCR 921
SPBMULn 924
SPBR 837, 909
SPCKD 840, 912
SPCMD 843
SPCMDn 915
SPCR 825, 899
SPDCR 911
SPDR 833, 906
SPND 842, 914
SPPCR 828, 901
SPSCR 834, 907
SPSR 830, 903
SPSSR 836, 908
SRCCTRL 2440
SRCID 2434
SRCIDCTRL 2436
SRCOD 2435
SRCODCTRL 2438
SRCSTAT 2446
SSI 1413
SSICR 1069
SSIFCR 1082
SSIFRDR 1089
SSIFSR 1085
SSIFTDR 1088
SSIRDR 1081
SSISR 1077
SSITDMR 1090
SSITDR 1081
SSLND 841, 913
SSLP 827, 900
STAT 1339
STBCR1 2675
STBCR10 2692
STBCR2 2676
STBCR3 2677
STBCR4 2679
STBCR5 2682
STBCR6 2684
STBCR7 2686
STBCR8 2688
STBCR9 2690
STRMDIN0 1418
STRMDIN2 1418
STRMDOUT0 1419
SWRSTCR1 2694
SWRSTCR2 2696
SYNCSSR 1809
SYNSCR1 1729
SYNSCR2 1735
SYNSCR3 1737
SYNSCR4 1739
SYNSCR5 1741
SYSCFG 1516
SYSCR1 2697
SYSCR2 2698
SYSCR3 2699
SYSCR4 2701
SYSCR5 2702
SYSSTS 1522
TADCOBRA_4 524
TADCOBRB_4 524
TADCORA_4 524
TADCORB_4 524
TADCR 521
TBTER 546
TBTM 518
TCBR 543
TCDR 542
TCMR0 to TCMR2 1225
TCNT 525
TCNTR 1224
TCNTS 541

chanhvinh.com

TCR 485
TDAD 1345
TDDR 542
TDER 548
TEC 1200
TESTMODE 1529
TGCR 539
TGCR1 1723
TGCR2 1724
TGCR3 1725
TGR 525
TICCR 519
TIER 510
TINTCR 1777
TIOR 492
TITCNT 545
TITCR 543
TLCA 1343
TLCS 1347
TMDR 489
TOCR1 532
TOCR2 535
TOER 530
TOLBR 538
TRCA 1344
TRCS 1349
TRWER 529
TSR 513, 1221
TSTR 526
TSYR 527
TTCR0 1216
TTTSEL 1227
TUI 1346
TWCR 549
TXACK0 1208
TXACK1 1207
TXCR0 1207
TXCR1 1206
TXPR0 1205
TXPR1 1204
UFRMNUM 1576
UMSR0 1214
UMSR1 1214
USBADDR 1577
USBINDX 1580
USBLENG 1581
USBREQ 1578
USBVAL 1579
VCDWCR1 1749
VSYNCSR 1799
WRCSR 711
WTCNT 707
WTCSR 708
XTALCTR 2715
YCDCR 1779
YCSCR11 1824
YCSCR12 1825
YCSCR3 1812
YCSCR4 1813
YCSCR5 1814
YCSCR6 1815
YCSCR7 1816
YCSCR8 1818
YCSCR9 1820
YCTNA_F0 to YCTNA_F8 1834
YCTNB_F0 to YCTNB_F8 1836
YCTWA_F0 to YCTWA_F8 1830
YCTWB_F0 to YCTWB_F8 1832
YGAINCR 1838
Relationship between access size and number of bursts 358
Relationship between non-normal transfer operations 938
Relationship between refresh requests and bus cycles 377
Renesas quad serial peripheral interface 893
Renesas serial peripheral interface 819
Renesas serial peripheral interface timing 3013

chanhvinh.com

Renesas SPDIF interface 1329
Reset sequence..... 1230
Reset state 100
Reset-synchronized PWM mode 580
Restoration from bank 218
Restoration from stack..... 219
Restriction on direct memory access controller usage..... 816
RISC-type instruction set..... 64
Roles of mailboxes 1166
Rounding 111

S

Sampling rate converter..... 2431
Saving to bank 217
Saving to stack..... 219
Scan mode..... 1451
SD host interface 2477
SD host interface timing 3040
SDRAM interface 343
Searching cache 256
Sector access mode 1499
Self-refreshing 375
Sending a break signal 816
Serial bit clock control..... 1112
Serial communication interface with FIFO 751
Serial communication interface with FIFO timing..... 3012
Serial I/O with FIFO..... 1115
Serial I/O with FIFO timing..... 3026
Serial sound interface 1063
Serial sound interface timing 3024
Setting analog input voltage 1460
Setting I/O ports for controller area network..... 1256
Shift instructions..... 91
Sign extension of word data..... 64
Single address mode 464
Single mode 1446
Single read 362
Single write 365
Single-SPI mode 939
Slave mode operation..... 884
Slave receive operation 1048
Slave transmit operation..... 1045
Sleep mode..... 1231, 2716
Slot illegal instructions..... 158
Software standby mode 2717
Sound generator 2459
SPI multi I/O bus controller 955
SRAM interface with byte selection 388
Stack after interrupt exception handling 208
Stack status after exception handling ends 161
Standby control circuit 127
Status register (SR) 58
Stopping and resuming CD-DSP operation 1435
Supported DMA transfers 461
Syndrome calculation..... 1426
System configuration example..... 853
System control instructions..... 93
System matrix 1179

T

T bit..... 65
Table setting..... 2406
TAP controller 2741
Target-sector buffering function 1430
TDO output timing..... 2742
Test mode settings..... 1228
Time slave..... 1242
Time trigger control (TT control) 1176
Time triggered transmission..... 1237
Timestamp 1175
Timing to clear an interrupt source 223

chanhvinh.com

Tone frequency setting 2473
Transfer format.....856, 857, 930, 931
Transfer rate..... 1027
Trap instructions..... 158
TTW[10] (time trigger window)..... 1177
Tx-trigger control field 1176
Tx-trigger time (TTT)..... 1176
Types of exception handling and
priority order..... 141

U

UBC timing 3008
Unconditional branch instructions
with no delay slot..... 65
USB 2.0 host/function module 1509
USB 2.0 host/function module
timing..... 3034
User break controller (UBC) 225
User debugging interface..... 2729
User debugging interface interrupt 185
User debugging interface interrupt 2743
User debugging interface reset..... 2743
User debugging interface timing..... 3043
Using alarm function..... 748
Using interval timer mode 716
Using watchdog timer mode 714

V

Vector base register (VBR)..... 59

W

Wait between access cycles 399
Watchdog timer..... 705
Watchdog timer timing 3011
Write-back buffer
(only for operand cache) 259

chanhvinh.com

SH7268 Group, SH7269 Group User's Manual: Hardware

Publication Date: Rev.2.00 Sep 26, 2012

Published by: Renesas Electronics Corporation

chanhvinh.com

RENESAS

SALES OFFICES Renesas Electronics Corporation http://www.renesas.com

Refer to "http://www.renesas.com/" for the latest and detailed information.

Renesas Electronics America Inc.
2880 Scott Boulevard Santa Clara, CA 95050-2554, U.S.A.
Tel: +1-408-588-6000, Fax: +1-408-588-6130

Renesas Electronics Canada Limited
1101 Nicholson Road, Newmarket, Ontario L3Y 9C3, Canada
Tel: +1-905-898-5441, Fax: +1-905-898-3220

Renesas Electronics Europe Limited
Dukes Meadow, Millboard Road, Bourne End, Buckinghamshire, SL8 5FH, U.K
Tel: +44-1628-651-700, Fax: +44-1628-651-804

Renesas Electronics Europe GmbH
Arcadiastrasse 10, 40472 Düsseldorf, Germany
Tel: +49-211-65030, Fax: +49-211-6503-1327

Renesas Electronics (China) Co., Ltd.
7th Floor, Quantum Plaza, No.27 ZhiChunLu Haidian District, Beijing 100083, P.R.China
Tel: +86-10-8235-1155, Fax: +86-10-8235-7679

Renesas Electronics (Shanghai) Co., Ltd.
Unit 204, 205, AZIA Center, No.1233 Lujiazui Ring Rd., Pudong District, Shanghai 200120, China
Tel: +86-21-5877-1818, Fax: +86-21-6887-7858 / -7898

Renesas Electronics Hong Kong Limited
Unit 1601-1613, 16/F., Tower 2, Grand Century Place, 193 Prince Edward Road West, Mongkok, Kowloon, Hong Kong
Tel: +852-2886-9318, Fax: +852 2886-9022/9044

Renesas Electronics Taiwan Co., Ltd.
13F, No. 363, Fu Shing North Road, Taipei, Taiwan
Tel: +886-2-8175-9600, Fax: +886 2-8175-9670

Renesas Electronics Singapore Pte. Ltd.
80 Bendemeer Road, Unit #06-02 Hyflux Innovation Centre Singapore 339949
Tel: +65-6213-0200, Fax: +65-6213-0300

Renesas Electronics Malaysia Sdn.Bhd.
Unit 906, Block B, Menara Amcorp, Amcorp Trade Centre, No. 18, Jln Persiaran Barat, 46050 Petaling Jaya, Selangor Darul Ehsan, Malaysia
Tel: +60-3-7955-9390, Fax: +60-3-7955-9510

Renesas Electronics Korea Co., Ltd.
11F., Samik Lavied' or Bldg., 720-2 Yeoksam-Dong, Kangnam-Ku, Seoul 135-080, Korea
Tel: +82-2-558-3737, Fax: +82-2-558-5141

© 2012 Renesas Electronics Corporation. All rights reserved.
Colophon 1.3

chanhvinh.com
chanhvinh.com
chanhvinh.com
chanhvinh.com

chanhvinh.com

SH7268 Group, SH7269 Group

chanhvinh.com
chanhvinh.com
chanhvinh.com
chanhvinh.com

Renesas Electronics Corporation

R01UH0048EJ0200