chanhvinh.com

R1WV6416R Series

64Mb Advanced LPSRAM (4M word x 16bit / 8M word x 8bit)

REJ03C0368-0100
Rev.1.00
2009.05.07

Description

The R1WV6416R Series is a family of low voltage 64-Mbit static RAMs organized as 4,194,304-word by 16-bit, fabricated by Renesas's high-performance 0.15um CMOS and TFT technologies.

The R1WV6416R Series is suitable for memory applications where a simple interfacing, battery operating and battery backup are the important design objectives.

The R1WV6416R Series is provided in 48-pin thin small outline package [TSOP (I): 12mm x 20mm with pin pitch of 0.5mm], 52-pin micro thin small outline package [µTSOP (II): 10.79mm x 10.49mm with pin pitch of 0.4mm] and 48-ball fine pitch ball grid array [f-BGA] package. It gives the best solution for compaction of mounting area as well as flexibility of wiring pattern of printed circuit boards.

Features

- Single 2.7~3.6V power supply
- Small stand-by current: 8 µA (3.0V, typical)
- No clocks, No refresh
- All inputs and outputs are TTL compatible.
- Easy memory expansion by CS1#, CS2, LB# and UB#
- Common Data I/O
- Three-state outputs: OR-tie Capability
- OE# prevents data contention on the I/O bus

Ordering Information

Type No.	Access time	Package
R1WV6416RSA-5S%	55 ns	12mm x 20mm 48-pin plastic TSOP (I) (normal-bend type) (48P3R)
R1WV6416RSA-7S%	70 ns	
R1WV6416RSD-5S%	55 ns	350 mil 52-pin plastic µ-TSOP (II) (normal-bend type) (52PTG)
R1WV6416RSD-7S%	70 ns	
R1WV6416RBG-5S%	55 ns	f-BGA 0.75mm pitch 48-ball
R1WV6416RBG-7S%	70 ns	

% - Temperature version; see table below

%	Temperature Range
R	0 ~ +70 °C
I	-40 ~ +85 °C

chanhvinh.com

Pin Arrangement

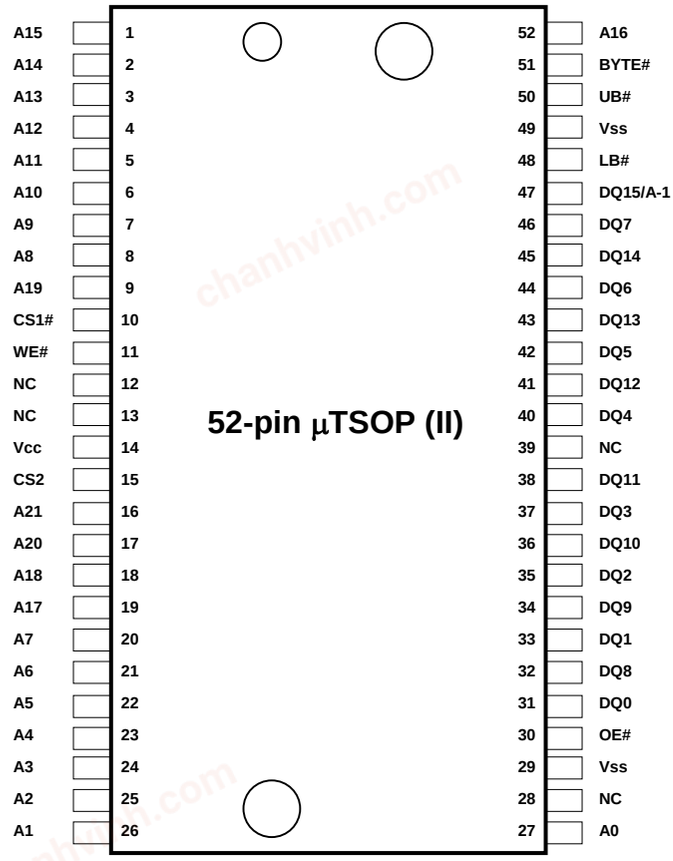

52-pin μTSOP (II)

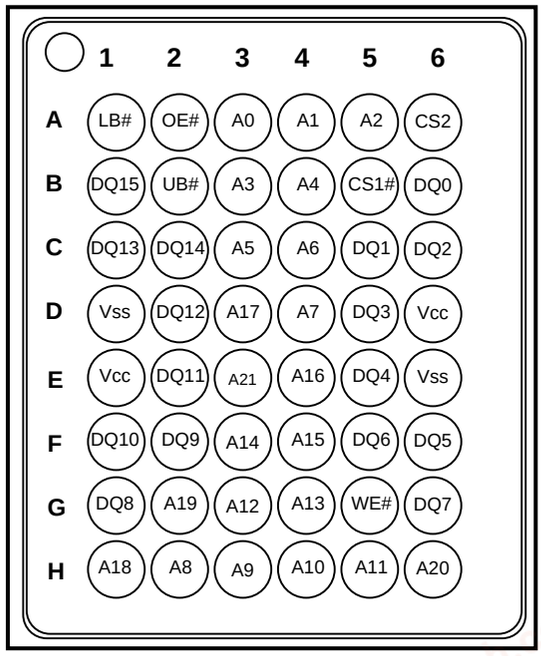

48-pin f-BGA (TOP VIEW)

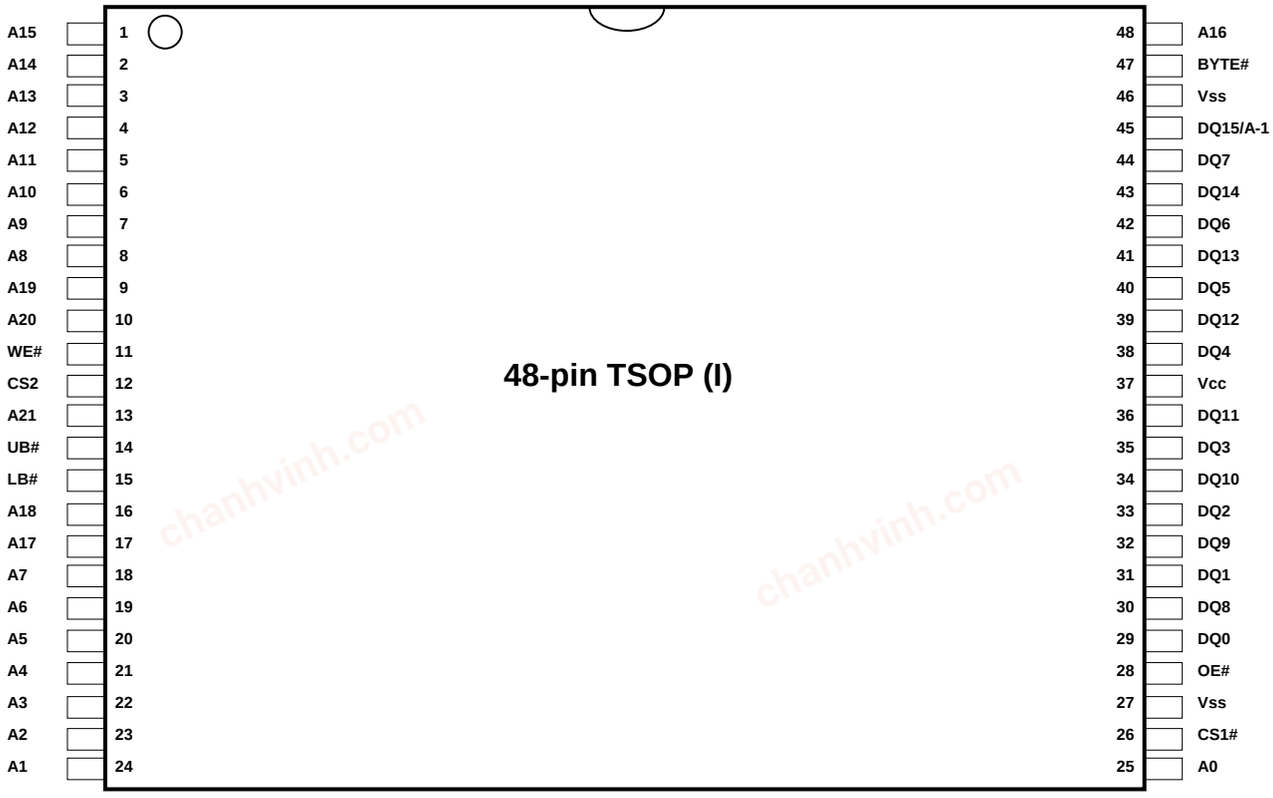

48-pin TSOP (I)

chanhvinh.com

Pin Description

Pin name	Function
Vcc	Power supply
Vss	Ground
A0 to A21	Address input (word mode)
A-1 to A21	Address input (byte mode)
DQ0 to DQ15	Data input/output
CS1#	Chip select 1
CS2	Chip select 2
WE#	Write enable
OE#	Output enable
LB#	Lower byte enable
UB#	Upper byte enable
BYTE#	Byte control mode enable
NC	Non connection

Note: BYTE# pin is supported for 48-pin TSOP (I) and 52-pin µTSOP (II) packages.

chanhvinh.com

Block Diagram

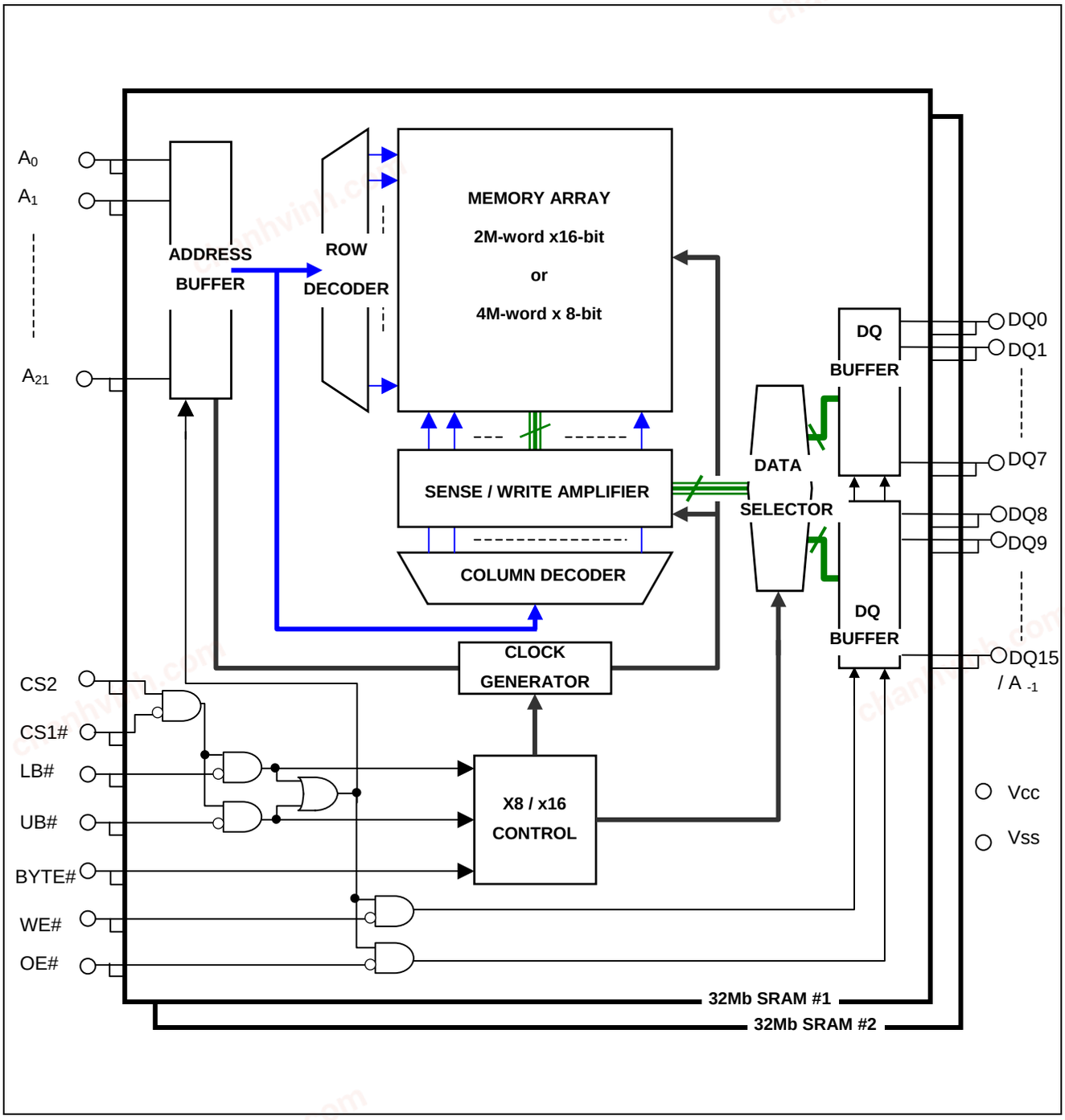

Note: BYTE# pin is supported for 48-pin TSOP (I) and 52-pin µTSOP (II) packages.

chanhvinh.com

Operation Table

CS1#	CS2	BYTE#	LB#	UB#	WE#	OE#	DQ0~7	DQ8~14	DQ15	Operation
H	X	X	X	X	X	X	High-Z	High-Z	High-Z	Stand-by
X	L	X	X	X	X	X	High-Z	High-Z	High-Z	Stand-by
X	X	H	H	H	X	X	High-Z	High-Z	High-Z	Stand-by
L	H	H	L	H	L	X	Din	High-Z	High-Z	Write in lower byte
L	H	H	L	H	H	L	Dout	High-Z	High-Z	Read in lower byte
L	H	H	L	H	H	H	High-Z	High-Z	High-Z	Output disable
L	H	H	H	L	L	X	High-Z	Din	Din	Write in upper byte
L	H	H	H	L	H	L	High-Z	Dout	Dout	Read in upper byte
L	H	H	H	L	H	H	High-Z	High-Z	High-Z	Output disable
L	H	H	L	L	L	X	Din	Din	Din	Word write
L	H	H	L	L	H	L	Dout	Dout	Dout	Word read
L	H	H	L	L	H	H	High-Z	High-Z	High-Z	Output disable
L	H	L	L	L	L	X	Din	High-Z	A-1	Byte write
L	H	L	L	L	H	L	Dout	High-Z	A-1	Byte read
L	H	L	L	L	H	H	High-Z	High-Z	A-1	Output disable

Note1. H: V_{IH} L:V_{IL} X: V_{IH} or V_{IL}

2. BYTE# pin is supported for 48-pin TSOP (I) and 52-pin µTSOP (II) packages.

3. When apply BYTE# =“L”, please assign LB#=UB#=“L”.

Absolute Maximum Ratings

Parameter	Symbol	Value		unit
Power supply voltage relative to Vss	Vcc	-0.5 to +4.6		V
Terminal voltage on any pin relative to Vss	V_T	-0.5[*1] to Vcc+0.3[*2]		V
Power dissipation	P_T	0.7		W
Operation temperature	Topr[*3]	R ver.	0 to +70	°C
		I ver.	-40 to +85	°C
Storage temperature range	Tstg	-65 to 150		°C
Storage temperature range under bias	Tbias[*3]	R ver.	0 to +70	°C
		I ver.	-40 to +85	°C

Note 1. –2.0V in case of AC (Pulse width ≤30ns)

2. Maximum voltage is +4.6V.

3. Ambient temperature range depends on R/I-version. Please see table on page 1.

chanhvinh.com

Recommended Operating Conditions

Parameter		Symbol	Min.	Typ.	Max.	Unit	Note
Supply voltage		Vcc	2.7	3.0	3.6	V	
		Vss	0	0	0	V	
Input high voltage		V_{IH}	2.4	-	Vcc+0.2	V	
Input low voltage		V_{IL}	-0.2	-	0.4	V	1
Ambient temperature range	R ver.	Ta	0	-	+70	°C	2
	I ver.		-40	-	+85	°C	2

Note 1. –2.0V in case of AC (Pulse width ≤ 30ns)
2. Ambient temperature range depends on R/I-version. Please see table on page 1.

DC Characteristics

Parameter	Symbol	Min.	Typ.	Max.	Unit	Test conditions[*3]
Input leakage current	$\lvert I_{LI} \rvert$	-	-	1	µA	Vin = Vss to Vcc
Output leakage current	$\lvert I_{LO} \rvert$	-	-	1	µA	BYTE# ≥ Vcc -0.2V or BYTE# ≤ 0.2V CS1# =V_{IH} or CS2 =V_{IL} or OE# =V_{IH} or WE# =V_{IL} or LB# = UB# =V_{IH}, VI/O =Vss to Vcc
Average operating current	I_{CC1}	-	45[*1]	60	mA	Min. cycle, duty =100%, II/O = 0mA BYTE# ≥ Vcc -0.2V or BYTE# ≤ 0.2V CS1# =V_{IL}, CS2 =V_{IH}, Others = V_{IH}/V_{IL}
	I_{CC2}	-	5[*1]	10	mA	Cycle =1µs, duty =100%, II/O = 0mA BYTE# ≥ Vcc -0.2V or BYTE# ≤ 0.2V CS1# ≤ 0.2V, CS2 ≥ V_{CC}-0.2V, V_{IH} ≥ V_{CC}-0.2V, V_{IL} ≤ 0.2V
Standby current	I_{SB}	-	0.1[*1]	0.3	mA	BYTE# ≥ Vcc -0.2V or BYTE# ≤ 0.2V CS2 =V_{IL}
Standby current	I_{SB1}	-	8[*1]	24	µA	~+25°C Vin ≥ 0V BYTE# ≥ Vcc -0.2V or BYTE# ≤ 0.2V (1) 0V ≤ CS2 ≤ 0.2V or (2) CS1# ≥ V_{CC}-0.2V, CS2 ≥ V_{CC}-0.2V or (3) LB# = UB# ≥ V_{CC}-0.2V, CS1# ≤ 0.2V, CS2 ≥ V_{CC}-0.2V
		-	14[*2]	48	µA	~+40°C
		-	-	100	µA	~+70°C
		-	-	160	µA	~+85°C
Output high voltage	V_{OH}	2.4	-	-	V	BYTE# ≥ Vcc -0.2V or BYTE# ≤ 0.2V I_{OH} = -0.5mA
Output low voltage	V_{OL}	-	-	0.4	V	BYTE# ≥ Vcc -0.2V or BYTE# ≤ 0.2V I_{OL} = 2mA

Note 1. Typical parameter indicates the value for the center of distribution at 3.0V (Ta= 25ºC), and not 100% tested.
2. Typical parameter indicates the value for the center of distribution at 3.0V (Ta= 40ºC), and not 100% tested.
3. BYTE# pin is supported for 48-pin TSOP (I) and 52-pin µTSOP (II) packages.

chanhvinh.com

Capacitance

(Ta =25°C, f =1MHz)

Parameter	Symbol	Min.	Typ.	Max.	Unit	Test conditions	Note
Input capacitance	C in	-	-	20	pF	Vin =0V	1
Input / output capacitance	$C_{I/O}$	-	-	20	pF	$V_{I/O}$ =0V	1

Note1.This parameter is sampled and not 100% tested.

AC Characteristics

Test Conditions (Vcc = 2.7V ~ 3.6V, Ta = 0 ~ +70°C / -40 ~ +85°C[*1])

- Input pulse levels: V_{IL} = 0.4V, V_{IH} = 2.4V
- Input rise and fall time: 5ns
- Input and output timing reference level: 1.4V
- Output load: See figures (Including scope and jig)

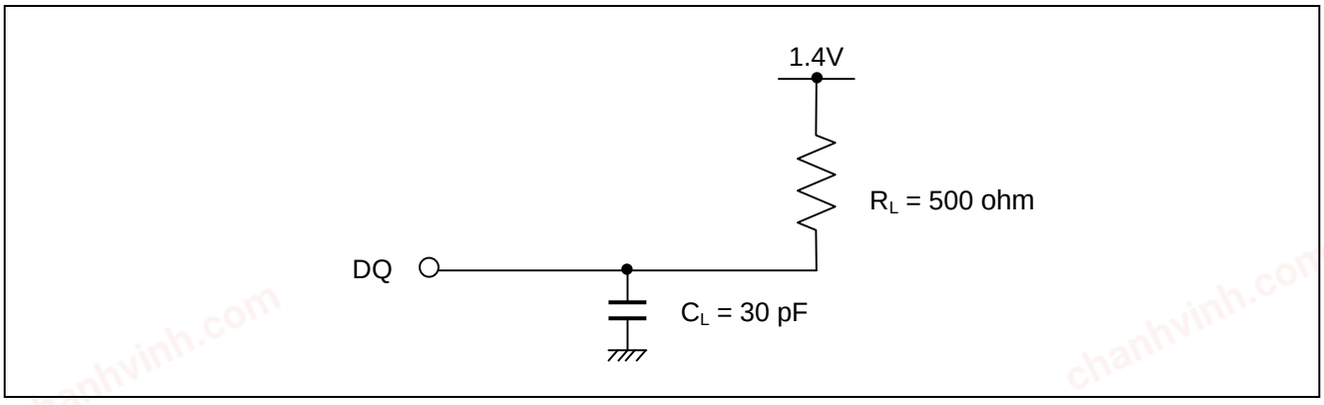

Note1. Ambient temperature range depends on R/I-version. Please see table on page 1.

chanhvinh.com

Read Cycle

Parameter	Symbol	R1WV6416R**-5S		R1WV6416R**-7S		Unit	Note
		Min.	Max.	Min.	Max.		
Read cycle time	t_{RC}	55	-	70	-	ns	
Address access time	t_{AA}	-	55	-	70	ns	
Chip select access time	t_{ACS1}	-	55	-	70	ns	
	t_{ACS2}	-	55	-	70	ns	
Output enable to output valid	t_{OE}	-	25	-	35	ns	
Output hold from address change	t_{OH}	10	-	10	-	ns	
LB#, UB# access time	t_{BA}	-	55	-	70	ns	
Chip select to output in low-Z	t_{CLZ1}	10	-	10	-	ns	2,3
	t_{CLZ2}	10	-	10	-	ns	2,3
LB#, UB# enable to low-Z	t_{BLZ}	5	-	5	-	ns	2,3
Output enable to output in low-Z	t_{OLZ}	5	-	5	-	ns	2,3
Chip deselect to output in high-Z	t_{CHZ1}	0	20	0	25	ns	1,2,3
	t_{CHZ2}	0	20	0	25	ns	1,2,3
LB#, UB# disable to high-Z	t_{BHZ}	0	20	0	25	ns	1,2,3
Output disable to output in high-Z	t_{OHZ}	0	20	0	25	ns	1,2,3

chanhvinh.com

Write Cycle

Parameter	Symbol	R1WV6416R**-5S		R1WV6416R**-7S		Unit	Note
		Min.	Max.	Min.	Max.		
Write cycle time	t_{WC}	55	-	70	-	ns	
Address valid to end of write	t_{AW}	50	-	65	-	ns	
Chip select to end of write	t_{CW}	50	-	65	-	ns	5
Write pulse width	t_{WP}	40	-	55	-	ns	4
LB#, UB# valid to end of write	t_{BW}	50	-	65	-	ns	
Address setup time	t_{AS}	0	-	0	-	ns	6
Write recovery time	t_{WR}	0	-	0	-	ns	7
Data to write time overlap	t_{DW}	25	-	35	-	ns	
Data hold from write time	t_{DH}	0	-	0	-	ns	
Output enable from end of write	t_{OW}	5	-	5	-	ns	2
Output disable to output in high-Z	t_{OHZ}	0	20	0	25	ns	1,2
Write to output in high-Z	t_{WHZ}	0	20	0	25	ns	1,2

Note1. t_{CHZ}, t_{OHZ}, t_{WHZ} and t_{BHZ} are defined as the time at which the outputs achieve the open circuit conditions and are not referred to output voltage levels.

2. This parameter is sampled and not 100% tested.

3. At any given temperature and voltage condition, t_{HZ} max is less than t_{LZ} min both for a given device and from device to device.

4. A write occurs during the overlap of a low CS1#, a high CS2, a low WE# and a low LB# or a low UB#.

A write begins at the latest transition among CS1# going low, CS2 going high, WE# going low and LB# going low or UB# going low .

A write ends at the earliest transition among CS1# going high, CS2 going low, WE# going high and LB# going high or UB# going high. t_{WP} is measured from the beginning of write to the end of write.

5. t_{CW} is measured from the later of CS1# going low or CS2 going high to end of write.

6. t_{AS} is measured the address valid to the beginning of write.

7. t_{WR} is measured from the earliest of CS1# or WE# going high or CS2 going low to the end of write cycle.

chanhvinh.com

BYTE# Timing Conditions

Parameter	Symbol	R1WV6416R**-5S		R1WV6416R**-7S		Unit	Note
		Min.	Max.	Min.	Max.		
Byte setup time	t_{BS}	5	-	5	-	ms	
Byte recovery time	t_{BR}	5	-	5	-	ms	

BYTE# Timing Waveforms

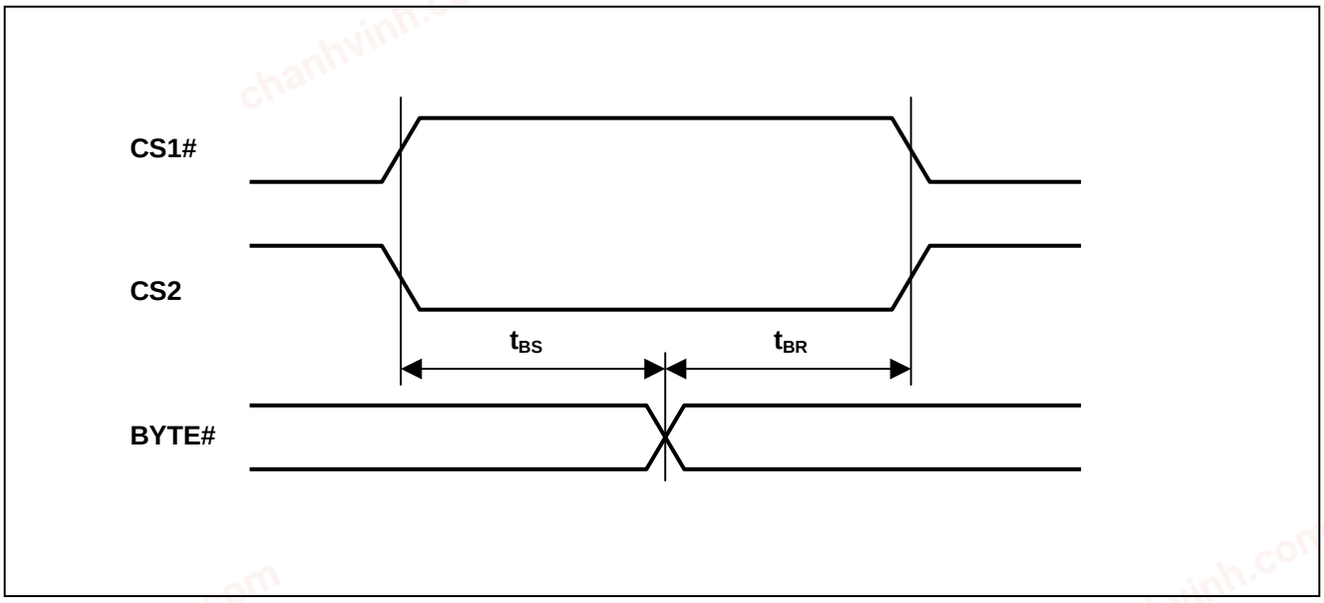

chanhvinh.com

Timing Waveforms

Read Cycle[*1]

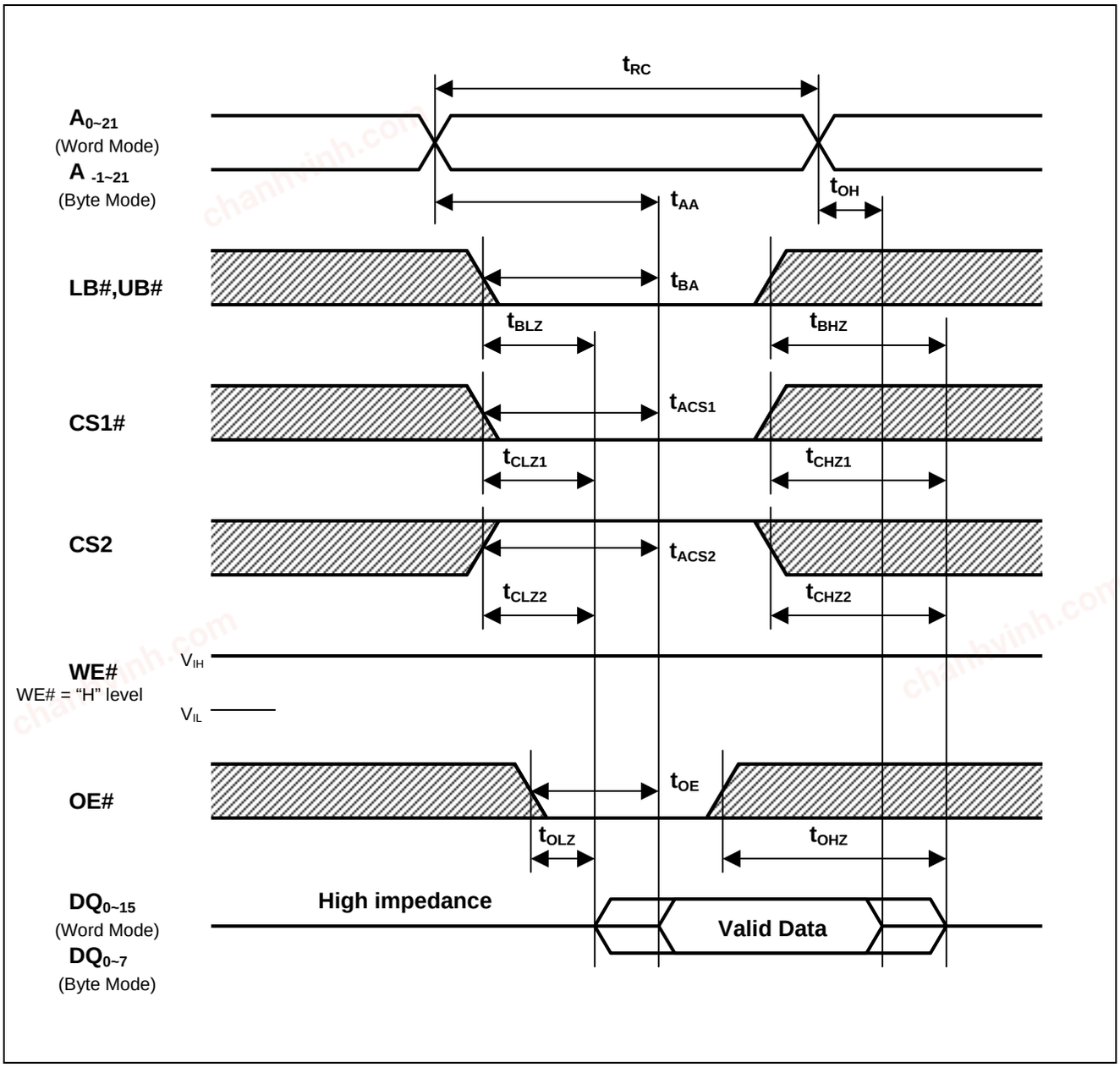

Note1. BYTE# ≥ Vcc – 0.2V or BYTE# ≤ 0.2V

chanhvinh.com

Write Cycle (1)[*1] (WE# CLOCK)

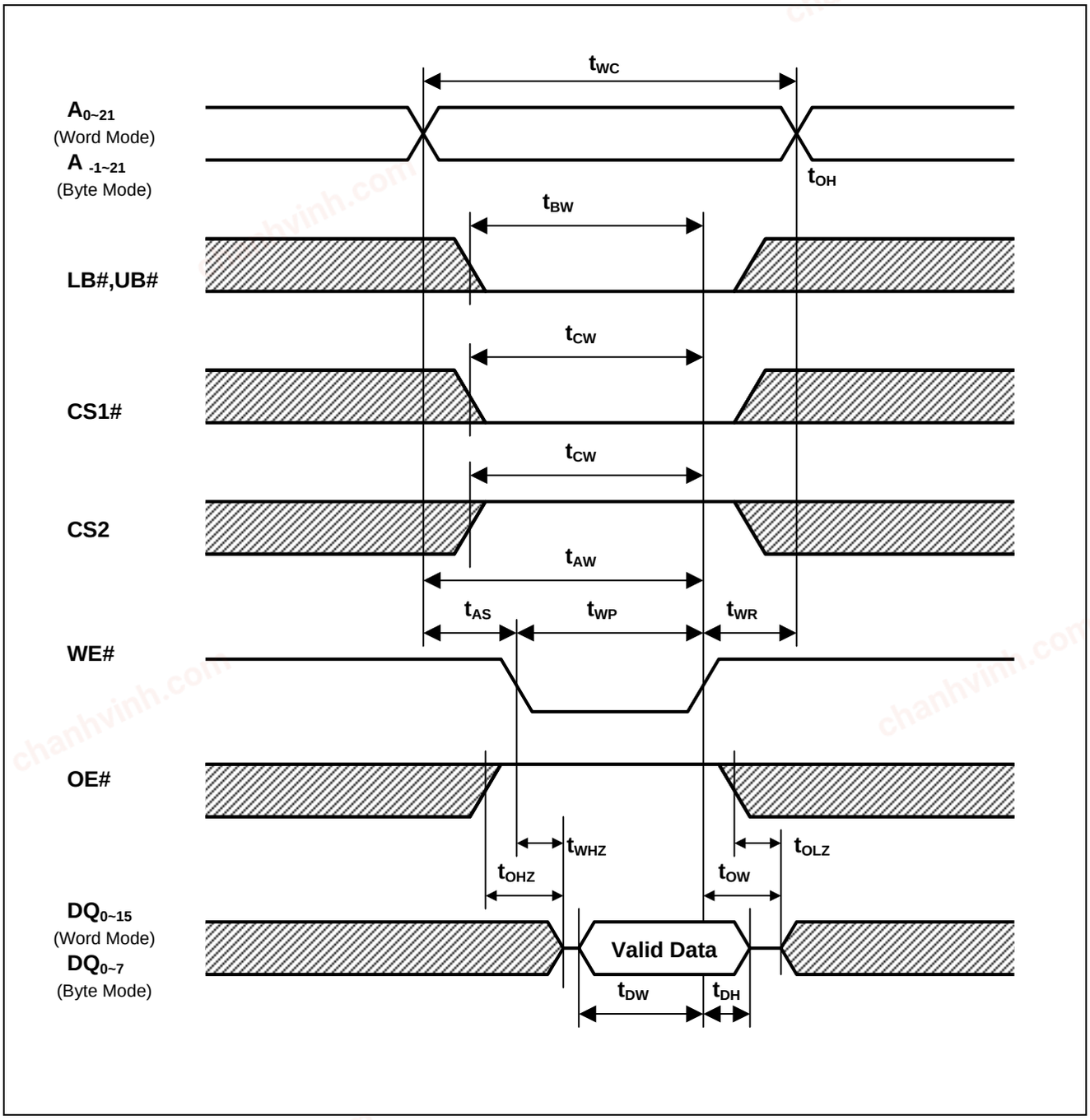

Note1. BYTE# ≥ Vcc – 0.2V or BYTE# ≤ 0.2V

chanhvinh.com

Write Cycle (2)[*1] (CS1#, CS2 CLOCK)

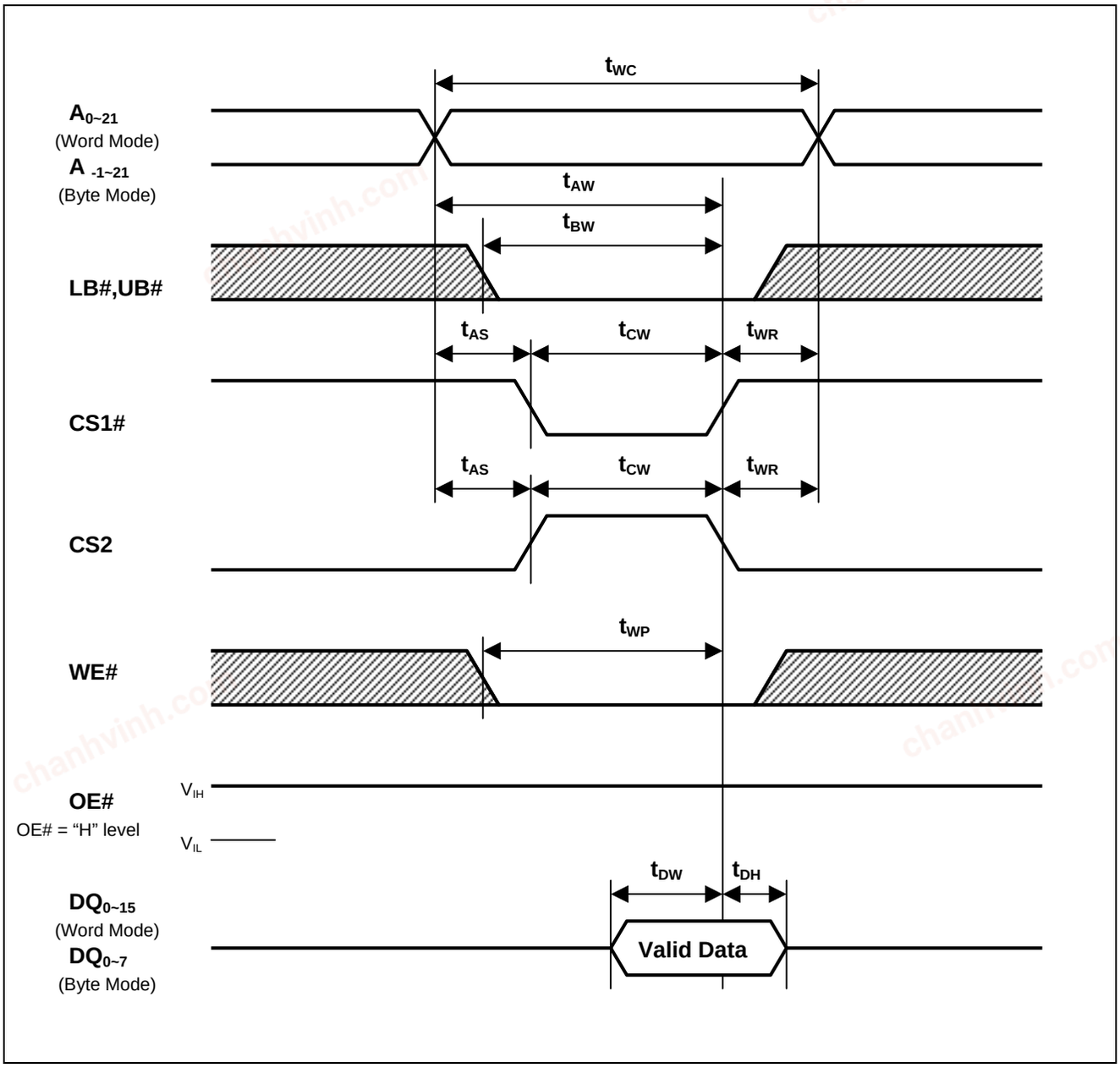

Note1. BYTE# ≥ Vcc – 0.2V or BYTE# ≤ 0.2V

chanhvinh.com

Write Cycle (3)[*1] (LB#, UB# CLOCK)

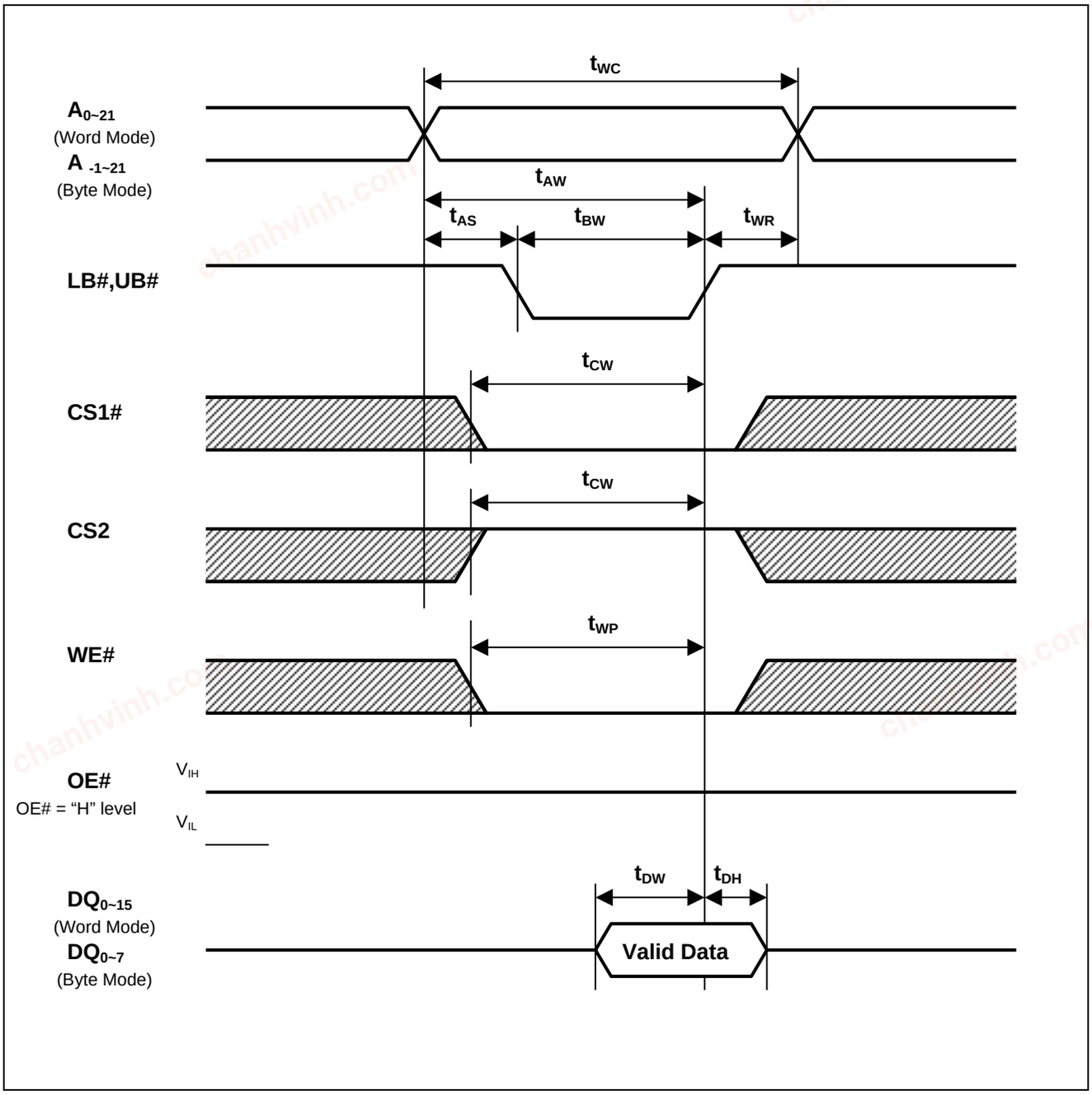

Note1. BYTE# ≥ Vcc – 0.2V or BYTE# ≤ 0.2V

chanhvinh.com

Low Vcc Data Retention Characteristics

Parameter	Symbol	Min.	Typ	Max.	Unit	Test conditions[*3,4]	
V_{CC} for data retention	V_{DR}	2.0	-	3.6	V	Vin ≥ 0V BYTE# ≥ Vcc -0.2V or BYTE# ≤ 0.2V (1) 0V ≤ CS2 ≤ 0.2V or (2) CS1# ≥ V_{CC}-0.2V, CS2 ≥ V_{CC}-0.2V or (3) LB# = UB# ≥ V_{CC}-0.2V, CS1# ≤ 0.2V, CS2 ≥ V_{CC}-0.2V	
Data retention current	I_{CCDR}	-	8[*1]	24	µA	~+25°C	Vin ≥ 0V BYTE# ≥ Vcc -0.2V or BYTE# ≤0.2V (1) 0V ≤ CS2 ≤ 0.2V or (2) CS1# ≥ V_{CC}-0.2V, CS2 ≥ V_{CC}-0.2V or (3) LB# = UB# ≥ V_{CC}-0.2V, CS1# ≤ 0.2V, CS2 ≥ V_{CC}-0.2V
		-	14[*2]	48	µA	~+40°C	
		-	-	100	µA	~+70°C	
		-	-	160	µA	~+85°C	
Chip select to data retention time	t_{CDR}	0	-	-	ns	See retention waveform.	
Operation recovery time	t_R	5	-	-	ms		

Note 1. Typical parameter indicates the value for the center of distribution at 3.0V (Ta= 25ºC), and not 100% tested.

2. Typical parameter indicates the value for the center of distribution at 3.0V (Ta= 40ºC), and not 100% tested.

3. BYTE# pin is supported for 48-pin TSOP (I) and 52-pin µTSOP (II) packages.

4. CS2 also controls address buffer, WE# buffer ,CS1# buffer ,OE# buffer ,LB# ,UB# buffer and Din buffer. If CS2 controls data retention mode, Vin levels (address, WE# ,OE#,CS1#,LB#,UB#,I/O) can be in the high impedance state. If CS1# controls data retention mode, CS2 must be CS2 ≥ Vcc-0.2V or0V ≤ CS2 ≤ 0.2V. The other input levels (address, WE# ,OE#,CS1#,LB#,UB#,I/O) can be in the high impedance state.

chanhvinh.com

Low Vcc Data Retention Timing Waveforms[*1]

(1) CS1# Controlled

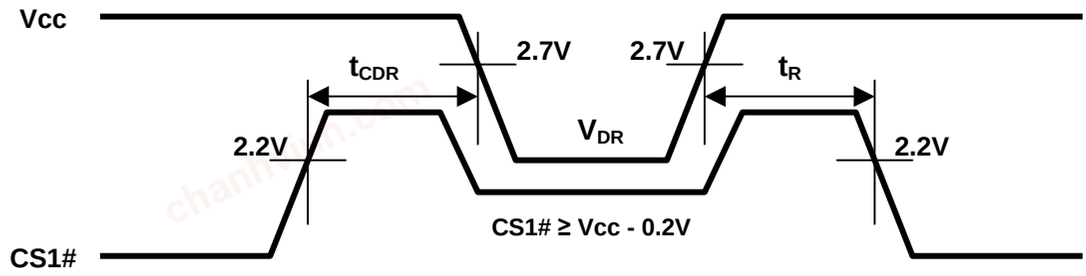

(2) CS2 Controlled

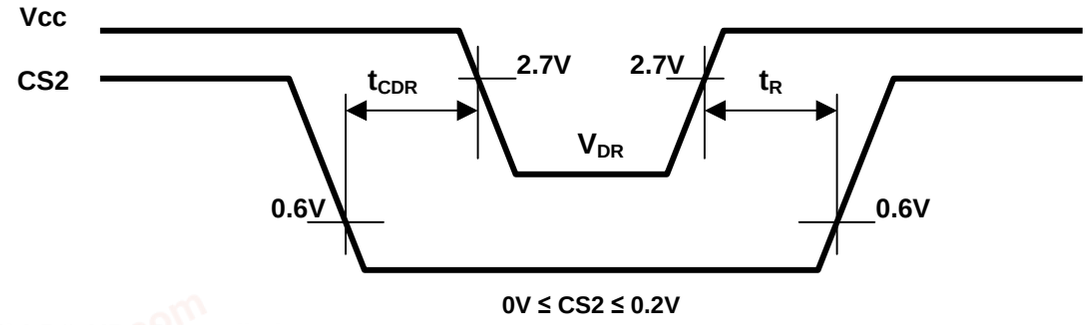

(3) LB#, UB# Controlled

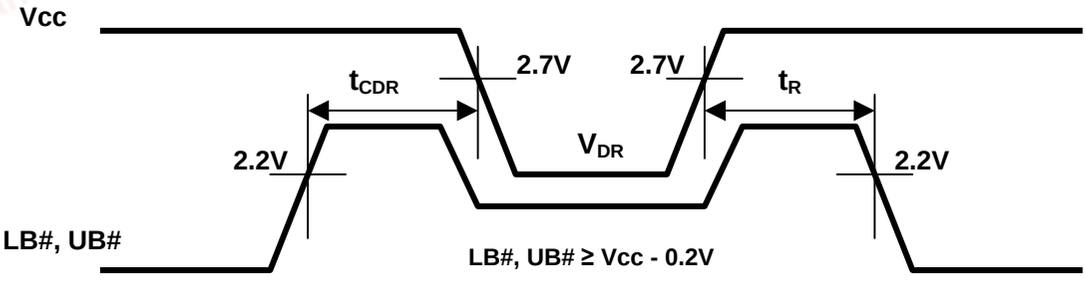

Note1. BYTE# ≥ Vcc – 0.2V or BYTE# ≤ 0.2V

chanhvinh.com

Revision History	R1WV6416R Data Sheet

Rev.	Date	Contents pf Revision	
		Page	Description
0.01	Mar.24, 2008	-	Initial issue: Preliminary Data Sheet
1.00	May 07, 2009	-	Finalized
		5	Operation Table corrected
		6	Error corrected: I_{SB} Test condition CS2=V_{IH}->V_{IL}

chanhvinh.com

chanhvinh.com

Renesas Technology Corp. Sales Strategic Planning Div. Nippon Bldg., 2-6-2, Ohte-machi, Chiyoda-ku, Tokyo 100-0004, Japan

Notes:
1. This document is provided for reference purposes only so that Renesas customers may select the appropriate Renesas products for their use. Renesas neither makes warranties or representations with respect to the accuracy or completeness of the information contained in this document nor grants any license to any intellectual property rights or any other rights of Renesas or any third party with respect to the information in this document.
2. Renesas shall have no liability for damages or infringement of any intellectual property or other rights arising out of the use of any information in this document, including, but not limited to, product data, diagrams, charts, programs, algorithms, and application circuit examples.
3. You should not use the products or the technology described in this document for the purpose of military applications such as the development of weapons of mass destruction or for the purpose of any other military use. When exporting the products or technology described herein, you should follow the applicable export control laws and regulations, and procedures required by such laws and regulations.
4. All information included in this document such as product data, diagrams, charts, programs, algorithms, and application circuit examples, is current as of the date this document is issued. Such information, however, is subject to change without any prior notice. Before purchasing or using any Renesas products listed in this document, please confirm the latest product information with a Renesas sales office. Also, please pay regular and careful attention to additional and different information to be disclosed by Renesas such as that disclosed through our website. (http://www.renesas.com)
5. Renesas has used reasonable care in compiling the information included in this document, but Renesas assumes no liability whatsoever for any damages incurred as a result of errors or omissions in the information included in this document.
6. When using or otherwise relying on the information in this document, you should evaluate the information in light of the total system before deciding about the applicability of such information to the intended application. Renesas makes no representations, warranties or guaranties regarding the suitability of its products for any particular application and specifically disclaims any liability arising out of the application and use of the information in this document or Renesas products.
7. With the exception of products specified by Renesas as suitable for automobile applications, Renesas products are not designed, manufactured or tested for applications or otherwise in systems the failure or malfunction of which may cause a direct threat to human life or create a risk of human injury or which require especially high quality and reliability such as safety systems, or equipment or systems for transportation and traffic, healthcare, combustion control, aerospace and aeronautics, nuclear power, or undersea communication transmission. If you are considering the use of our products for such purposes, please contact a Renesas sales office beforehand. Renesas shall have no liability for damages arising out of the uses set forth above.
8. Notwithstanding the preceding paragraph, you should not use Renesas products for the purposes listed below:
   (1) artificial life support devices or systems
   (2) surgical implantations
   (3) healthcare intervention (e.g., excision, administration of medication, etc.)
   (4) any other purposes that pose a direct threat to human life
   Renesas shall have no liability for damages arising out of the uses set forth in the above and purchasers who elect to use Renesas products in any of the foregoing applications shall indemnify and hold harmless Renesas Technology Corp., its affiliated companies and their officers, directors, and employees against any and all damages arising out of such applications.
9. You should use the products described herein within the range specified by Renesas, especially with respect to the maximum rating, operating supply voltage range, movement power voltage range, heat radiation characteristics, installation and other product characteristics. Renesas shall have no liability for malfunctions or damages arising out of the use of Renesas products beyond such specified ranges.
10. Although Renesas endeavors to improve the quality and reliability of its products, IC products have specific characteristics such as the occurrence of failure at a certain rate and malfunctions under certain use conditions. Please be sure to implement safety measures to guard against the possibility of physical injury, and injury or damage caused by fire in the event of the failure of a Renesas product, such as safety design for hardware and software including but not limited to redundancy, fire control and malfunction prevention, appropriate treatment for aging degradation or any other applicable measures. Among others, since the evaluation of microcomputer software alone is very difficult, please evaluate the safety of the final products or system manufactured by you.
11. In case Renesas products listed in this document are detached from the products to which the Renesas products are attached or affixed, the risk of accident such as swallowing by infants and small children is very high. You should implement safety measures so that Renesas products may not be easily detached from your products. Renesas shall have no liability for damages arising out of such detachment.
12. This document may not be reproduced or duplicated, in any form, in whole or in part, without prior written approval from Renesas.
13. Please contact a Renesas sales office if you have any questions regarding the information contained in this document, Renesas semiconductor products, or if you have any other inquiries.

RENESAS SALES OFFICES

http://www.renesas.com

Refer to "**http://www.renesas.com/en/network**" for the latest and detailed information.

Renesas Technology America, Inc.
450 Holger Way, San Jose, CA 95134-1368, U.S.A
Tel: <1> (408) 382-7500, Fax: <1> (408) 382-7501

Renesas Technology Europe Limited
Dukes Meadow, Millboard Road, Bourne End, Buckinghamshire, SL8 5FH, U.K.
Tel: <44> (1628) 585-100, Fax: <44> (1628) 585-900

Renesas Technology (Shanghai) Co., Ltd.
Unit 204, 205, AZIACenter, No.1233 Lujiazui Ring Rd, Pudong District, Shanghai, China 200120
Tel: <86> (21) 5877-1818, Fax: <86> (21) 6887-7858/7898

Renesas Technology Hong Kong Ltd.
7th Floor, North Tower, World Finance Centre, Harbour City, Canton Road, Tsimshatsui, Kowloon, Hong Kong
Tel: <852> 2265-6688, Fax: <852> 2377-3473

Renesas Technology Taiwan Co., Ltd.
10th Floor, No.99, Fushing North Road, Taipei, Taiwan
Tel: <886> (2) 2715-2888, Fax: <886> (2) 3518-3399

Renesas Technology Singapore Pte. Ltd.
1 Harbour Front Avenue, #06-10, Keppel Bay Tower, Singapore 098632
Tel: <65> 6213-0200, Fax: <65> 6278-8001

Renesas Technology Korea Co., Ltd.
Kukje Center Bldg. 18th Fl., 191, 2-ka, Hangang-ro, Yongsan-ku, Seoul 140-702, Korea
Tel: <82> (2) 796-3115, Fax: <82> (2) 796-2145

Renesas Technology Malaysia Sdn. Bhd
Unit 906, Block B, Menara Amcorp, Amcorp Trade Centre, No.18, Jln Persiaran Barat, 46050 Petaling Jaya, Selangor Darul Ehsan, Malaysia
Tel: <603> 7955-9390, Fax: <603> 7955-9510

© 2009. Renesas Technology Corp., All rights reserved. Printed in Japan.

Colophon .7.2

chanhvinh.com

To our customers,

Old Company Name in Catalogs and Other Documents

On April 1st, 2010, NEC Electronics Corporation merged with Renesas Technology Corporation, and Renesas Electronics Corporation took over all the business of both companies. Therefore, although the old company name remains in this document, it is a valid Renesas Electronics document. We appreciate your understanding.

Renesas Electronics website: http://www.renesas.com

April 1st, 2010
Renesas Electronics Corporation

Issued by: Renesas Electronics Corporation (http://www.renesas.com)

Send any inquiries to http://www.renesas.com/inquiry.

chanhvinh.com

chanhvinh.com

Notice

1. All information included in this document is current as of the date this document is issued. Such information, however, is subject to change without any prior notice. Before purchasing or using any Renesas Electronics products listed herein, please confirm the latest product information with a Renesas Electronics sales office. Also, please pay regular and careful attention to additional and different information to be disclosed by Renesas Electronics such as that disclosed through our website.
2. Renesas Electronics does not assume any liability for infringement of patents, copyrights, or other intellectual property rights of third parties by or arising from the use of Renesas Electronics products or technical information described in this document. No license, express, implied or otherwise, is granted hereby under any patents, copyrights or other intellectual property rights of Renesas Electronics or others.
3. You should not alter, modify, copy, or otherwise misappropriate any Renesas Electronics product, whether in whole or in part.
4. Descriptions of circuits, software and other related information in this document are provided only to illustrate the operation of semiconductor products and application examples. You are fully responsible for the incorporation of these circuits, software, and information in the design of your equipment. Renesas Electronics assumes no responsibility for any losses incurred by you or third parties arising from the use of these circuits, software, or information.
5. When exporting the products or technology described in this document, you should comply with the applicable export control laws and regulations and follow the procedures required by such laws and regulations. You should not use Renesas Electronics products or the technology described in this document for any purpose relating to military applications or use by the military, including but not limited to the development of weapons of mass destruction. Renesas Electronics products and technology may not be used for or incorporated into any products or systems whose manufacture, use, or sale is prohibited under any applicable domestic or foreign laws or regulations.
6. Renesas Electronics has used reasonable care in preparing the information included in this document, but Renesas Electronics does not warrant that such information is error free. Renesas Electronics assumes no liability whatsoever for any damages incurred by you resulting from errors in or omissions from the information included herein.
7. Renesas Electronics products are classified according to the following three quality grades: “Standard”, “High Quality”, and “Specific”. The recommended applications for each Renesas Electronics product depends on the product’s quality grade, as indicated below. You must check the quality grade of each Renesas Electronics product before using it in a particular application. You may not use any Renesas Electronics product for any application categorized as “Specific” without the prior written consent of Renesas Electronics. Further, you may not use any Renesas Electronics product for any application for which it is not intended without the prior written consent of Renesas Electronics. Renesas Electronics shall not be in any way liable for any damages or losses incurred by you or third parties arising from the use of any Renesas Electronics product for an application categorized as “Specific” or for which the product is not intended where you have failed to obtain the prior written consent of Renesas Electronics. The quality grade of each Renesas Electronics product is “Standard” unless otherwise expressly specified in a Renesas Electronics data sheets or data books, etc.

   “Standard”: Computers; office equipment; communications equipment; test and measurement equipment; audio and visual equipment; home electronic appliances; machine tools; personal electronic equipment; and industrial robots.

   “High Quality”: Transportation equipment (automobiles, trains, ships, etc.); traffic control systems; anti-disaster systems; anti-crime systems; safety equipment; and medical equipment not specifically designed for life support.

   “Specific”: Aircraft; aerospace equipment; submersible repeaters; nuclear reactor control systems; medical equipment or systems for life support (e.g. artificial life support devices or systems), surgical implantations, or healthcare intervention (e.g. excision, etc.), and any other applications or purposes that pose a direct threat to human life.
8. You should use the Renesas Electronics products described in this document within the range specified by Renesas Electronics, especially with respect to the maximum rating, operating supply voltage range, movement power voltage range, heat radiation characteristics, installation and other product characteristics. Renesas Electronics shall have no liability for malfunctions or damages arising out of the use of Renesas Electronics products beyond such specified ranges.
9. Although Renesas Electronics endeavors to improve the quality and reliability of its products, semiconductor products have specific characteristics such as the occurrence of failure at a certain rate and malfunctions under certain use conditions. Further, Renesas Electronics products are not subject to radiation resistance design. Please be sure to implement safety measures to guard them against the possibility of physical injury, and injury or damage caused by fire in the event of the failure of a Renesas Electronics product, such as safety design for hardware and software including but not limited to redundancy, fire control and malfunction prevention, appropriate treatment for aging degradation or any other appropriate measures. Because the evaluation of microcomputer software alone is very difficult, please evaluate the safety of the final products or system manufactured by you.
10. Please contact a Renesas Electronics sales office for details as to environmental matters such as the environmental compatibility of each Renesas Electronics product. Please use Renesas Electronics products in compliance with all applicable laws and regulations that regulate the inclusion or use of controlled substances, including without limitation, the EU RoHS Directive. Renesas Electronics assumes no liability for damages or losses occurring as a result of your noncompliance with applicable laws and regulations.
11. This document may not be reproduced or duplicated, in any form, in whole or in part, without prior written consent of Renesas Electronics.
12. Please contact a Renesas Electronics sales office if you have any questions regarding the information contained in this document or Renesas Electronics products, or if you have any other inquiries.

(Note 1) “Renesas Electronics” as used in this document means Renesas Electronics Corporation and also includes its majority-owned subsidiaries.

(Note 2) “Renesas Electronics product(s)” means any product developed or manufactured by or for Renesas Electronics.