chanhvinh.com

To our customers,

Old Company Name in Catalogs and Other Documents

On April 1st, 2010, NEC Electronics Corporation merged with Renesas Technology Corporation, and Renesas Electronics Corporation took over all the business of both companies. Therefore, although the old company name remains in this document, it is a valid Renesas Electronics document. We appreciate your understanding.

Renesas Electronics website: http://www.renesas.com

April 1st, 2010
Renesas Electronics Corporation

Issued by: Renesas Electronics Corporation (http://www.renesas.com)

Send any inquiries to http://www.renesas.com/inquiry.

chanhvinh.com

chanhvinh.com

Notice

1. All information included in this document is current as of the date this document is issued. Such information, however, is subject to change without any prior notice. Before purchasing or using any Renesas Electronics products listed herein, please confirm the latest product information with a Renesas Electronics sales office. Also, please pay regular and careful attention to additional and different information to be disclosed by Renesas Electronics such as that disclosed through our website.
2. Renesas Electronics does not assume any liability for infringement of patents, copyrights, or other intellectual property rights of third parties by or arising from the use of Renesas Electronics products or technical information described in this document. No license, express, implied or otherwise, is granted hereby under any patents, copyrights or other intellectual property rights of Renesas Electronics or others.
3. You should not alter, modify, copy, or otherwise misappropriate any Renesas Electronics product, whether in whole or in part.
4. Descriptions of circuits, software and other related information in this document are provided only to illustrate the operation of semiconductor products and application examples. You are fully responsible for the incorporation of these circuits, software, and information in the design of your equipment. Renesas Electronics assumes no responsibility for any losses incurred by you or third parties arising from the use of these circuits, software, or information.
5. When exporting the products or technology described in this document, you should comply with the applicable export control laws and regulations and follow the procedures required by such laws and regulations. You should not use Renesas Electronics products or the technology described in this document for any purpose relating to military applications or use by the military, including but not limited to the development of weapons of mass destruction. Renesas Electronics products and technology may not be used for or incorporated into any products or systems whose manufacture, use, or sale is prohibited under any applicable domestic or foreign laws or regulations.
6. Renesas Electronics has used reasonable care in preparing the information included in this document, but Renesas Electronics does not warrant that such information is error free. Renesas Electronics assumes no liability whatsoever for any damages incurred by you resulting from errors in or omissions from the information included herein.
7. Renesas Electronics products are classified according to the following three quality grades: “Standard”, “High Quality”, and “Specific”. The recommended applications for each Renesas Electronics product depends on the product’s quality grade, as indicated below. You must check the quality grade of each Renesas Electronics product before using it in a particular application. You may not use any Renesas Electronics product for any application categorized as “Specific” without the prior written consent of Renesas Electronics. Further, you may not use any Renesas Electronics product for any application for which it is not intended without the prior written consent of Renesas Electronics. Renesas Electronics shall not be in any way liable for any damages or losses incurred by you or third parties arising from the use of any Renesas Electronics product for an application categorized as “Specific” or for which the product is not intended where you have failed to obtain the prior written consent of Renesas Electronics. The quality grade of each Renesas Electronics product is “Standard” unless otherwise expressly specified in a Renesas Electronics data sheets or data books, etc.

   “Standard”: Computers; office equipment; communications equipment; test and measurement equipment; audio and visual equipment; home electronic appliances; machine tools; personal electronic equipment; and industrial robots.

   “High Quality”: Transportation equipment (automobiles, trains, ships, etc.); traffic control systems; anti-disaster systems; anti-crime systems; safety equipment; and medical equipment not specifically designed for life support.

   “Specific”: Aircraft; aerospace equipment; submersible repeaters; nuclear reactor control systems; medical equipment or systems for life support (e.g. artificial life support devices or systems), surgical implantations, or healthcare intervention (e.g. excision, etc.), and any other applications or purposes that pose a direct threat to human life.
8. You should use the Renesas Electronics products described in this document within the range specified by Renesas Electronics, especially with respect to the maximum rating, operating supply voltage range, movement power voltage range, heat radiation characteristics, installation and other product characteristics. Renesas Electronics shall have no liability for malfunctions or damages arising out of the use of Renesas Electronics products beyond such specified ranges.
9. Although Renesas Electronics endeavors to improve the quality and reliability of its products, semiconductor products have specific characteristics such as the occurrence of failure at a certain rate and malfunctions under certain use conditions. Further, Renesas Electronics products are not subject to radiation resistance design. Please be sure to implement safety measures to guard them against the possibility of physical injury, and injury or damage caused by fire in the event of the failure of a Renesas Electronics product, such as safety design for hardware and software including but not limited to redundancy, fire control and malfunction prevention, appropriate treatment for aging degradation or any other appropriate measures. Because the evaluation of microcomputer software alone is very difficult, please evaluate the safety of the final products or system manufactured by you.
10. Please contact a Renesas Electronics sales office for details as to environmental matters such as the environmental compatibility of each Renesas Electronics product. Please use Renesas Electronics products in compliance with all applicable laws and regulations that regulate the inclusion or use of controlled substances, including without limitation, the EU RoHS Directive. Renesas Electronics assumes no liability for damages or losses occurring as a result of your noncompliance with applicable laws and regulations.
11. This document may not be reproduced or duplicated, in any form, in whole or in part, without prior written consent of Renesas Electronics.
12. Please contact a Renesas Electronics sales office if you have any questions regarding the information contained in this document or Renesas Electronics products, or if you have any other inquiries.

(Note 1) “Renesas Electronics” as used in this document means Renesas Electronics Corporation and also includes its majority-owned subsidiaries.

(Note 2) “Renesas Electronics product(s)” means any product developed or manufactured by or for Renesas Electronics.

chanhvinh.com

R1RP0408D Series

4M High Speed SRAM (512-kword × 8-bit)

REJ03C0112-0200
Rev. 2.00
Dec.1.2008

Description

The R1RP0408D Series is a 4-Mbit high speed static RAM organized 512-k word × 8-bit. It has realized high speed access time by employing CMOS process (6-transistor memory cell) and high speed circuit designing technology. It is most appropriate for the application which requires high speed, high density memory and wide bit width configuration, such as cache and buffer memory in system. It is packaged in 400-mil 36-pin plastic SOJ.

Features

- Single 5.0 V supply: 5.0 V ± 10%
- Access time: 10 ns / 12 ns (max)
- Completely static memory
  - No clock or timing strobe required
- Equal access and cycle times
- Directly TTL compatible
  - All inputs and outputs
- Operating current: 140mA /130mA (max)
- TTL standby current: 40 mA (max)
- CMOS standby current: 5 mA (max)
  : 1.0 mA (max) (L-version)
- Data retention current: 0.5 mA (max) (L-version)
- Data retention voltage: 2 V (min) (L-version)
- Center V_{CC} and V_{SS} type pin out

chanhvinh.com

Ordering Information

Type No.	Access time	Package
R1RP0408DGE-0PR	10 ns	400-mil 36-pin plastic SOJ (36P0K)
R1RP0408DGE-2PR	12 ns	
R1RP0408DGE-2LR	12 ns	

Pin Arrangement

36-pin SOJ

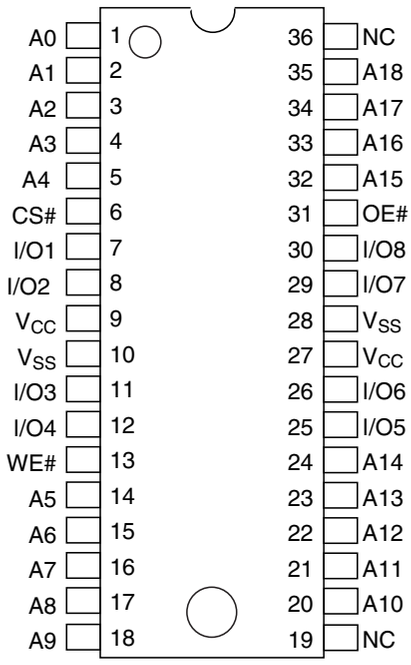

(Top View)

chanhvinh.com

Pin Description

Pin name	Function
A0 to A18	Address input
I/O1 to I/O8	Data input/output
CS#	Chip select
OE#	Output enable
WE#	Write enable
V_{CC}	Power supply
V_{SS}	Ground
NC	No connection

chanhvinh.com

Block Diagram

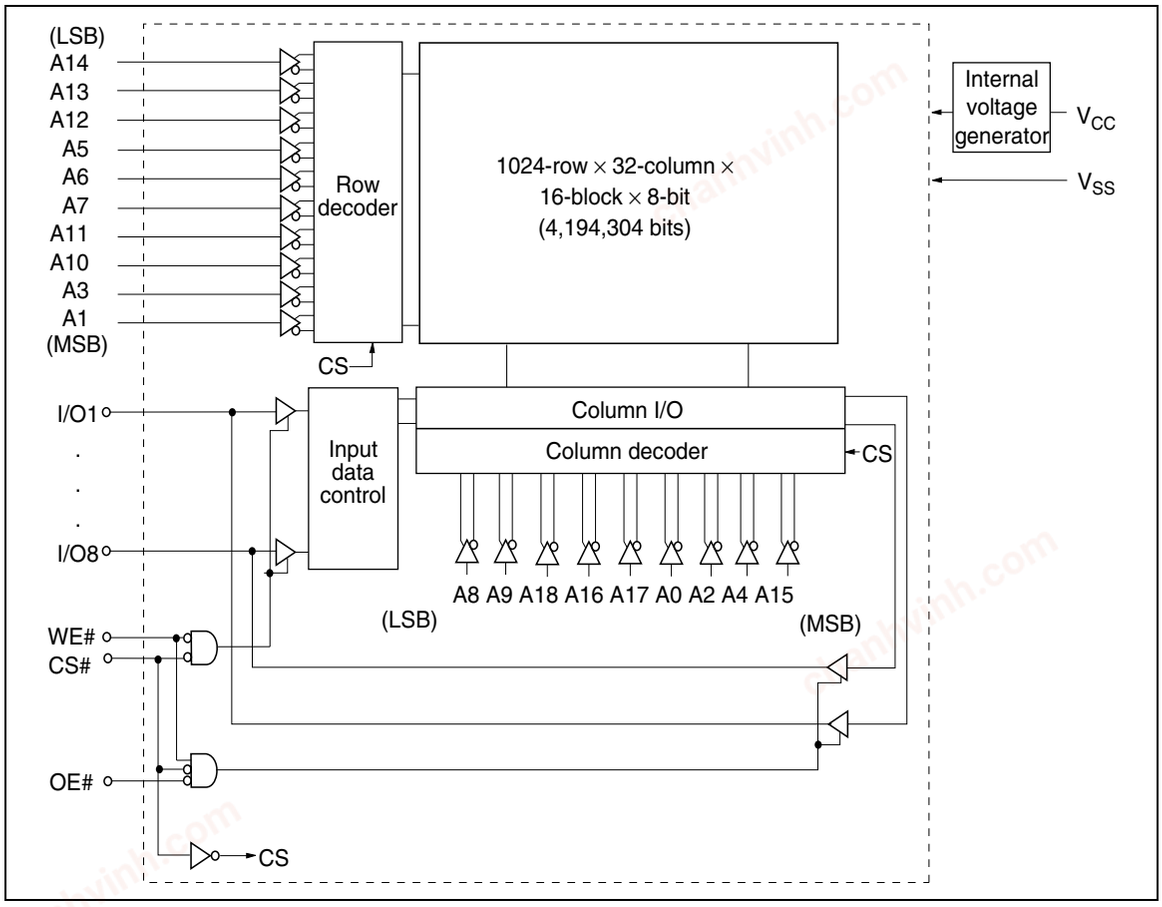

chanhvinh.com

Operation Table

CS#	OE#	WE#	Mode	V_{CC} current	I/O	Ref. cycle
H	×	×	Standby	I_{SB}, I_{SB1}	High-Z	—
L	H	H	Output disable	I_{CC}	High-Z	—
L	L	H	Read	I_{CC}	D_{OUT}	Read cycle (1) to (3)
L	H	L	Write	I_{CC}	D_{IN}	Write cycle (1)
L	L	L	Write	I_{CC}	D_{IN}	Write cycle (2)

Note: H: V_{IH}, L: V_{IL}, ×: V_{IH} or V_{IL}

Absolute Maximum Ratings

Parameter	Symbol	Value	Unit
Supply voltage relative to V_{SS}	V_{CC}	–0.5 to +7.0	V
Voltage on any pin relative to V_{SS}	V_T	–0.5*[1] to V_{CC} + 0.5*[2]	V
Power dissipation	P_T	1.0	W
Operating temperature	Topr	0 to +70	°C
Storage temperature	Tstg	–55 to +125	°C
Storage temperature under bias	Tbias	–10 to +85	°C

Notes: 1. V_T (min) = –2.0 V for pulse width (under shoot) ≤ 6 ns.
2. V_T (max) = V_{CC} + 2.0 V for pulse width (over shoot) ≤ 6 ns.

Recommended DC Operating Conditions

(Ta = 0 to +70°C)

Parameter	Symbol	Min	Typ	Max	Unit
Supply voltage	V_{CC}*[3]	4.5	5.0	5.5	V
	V_{SS}*[4]	0	0	0	V
Input voltage	V_{IH}	2.2	—	V_{CC} + 0.5*[2]	V
	V_{IL}	–0.5*[1]	—	0.8	V

Notes: 1. V_{IL} (min) = –2.0 V for pulse width (under shoot) ≤ 6 ns.
2. V_{IH} (max) = V_{CC} + 2.0 V for pulse width (over shoot) ≤ 6 ns.
3. The supply voltage with all V_{CC} pins must be on the same level.
4. The supply voltage with all V_{SS} pins must be on the same level.

chanhvinh.com

DC Characteristics

(Ta = 0 to +70°C, V_{CC} = 5.0 V ± 10%, V_{SS} = 0 V)

Parameter		Symbol	Min	Max	Unit	Test conditions
Input leakage current		$\|I_{LI}\|$	—	2	µA	V_{IN} = V_{SS} to V_{CC}
Output leakage current		$\|I_{LO}\|$	—	2	µA	V_{IN} = V_{SS} to V_{CC}
Operation power supply current	10nscycle	I_{CC}	—	140	mA	Min cycle CS# = V_{IL}, I_{OUT} = 0 mA Other inputs = V_{IH}/V_{IL}
	12nscycle	I_{CC}	—	130	mA	
Standby power supply current		I_{SB}	—	40	mA	Min cycle, CS# = V_{IH}, Other inputs = V_{IH}/V_{IL}
		I_{SB1}	—	5	mA	f = 0 MHz V_{CC} ≥ CS# ≥ V_{CC} – 0.2 V, (1) 0 V ≤ V_{IN} ≤ 0.2 V or (2) V_{CC} ≥ V_{IN} ≥ V_{CC} – 0.2 V
			—*[1]	1.0*[1]		
Output voltage		V_{OL}	—	0.4	V	I_{OL} = 8 mA
		V_{OH}	2.4	—	V	I_{OH} = –4 mA

Note: 1. This characteristics is guaranteed only for L-version.

Capacitance

(Ta = +25°C, f = 1.0 MHz)

Parameter	Symbol	Min	Max	Unit	Test conditions
Input capacitance*[1]	C_{IN}	—	6	pF	V_{IN} = 0 V
Input/output capacitance*[1]	$C_{I/O}$	—	8	pF	$V_{I/O}$ = 0 V

Note: 1. This parameter is sampled and not 100% tested.

chanhvinh.com

AC Characteristics

(Ta = 0 to +70°C, V_{CC} = 5.0 V ± 10%, unless otherwise noted.)

Test Conditions

- Input pulse levels: 3.0 V/0.0 V
- Input rise and fall time: 3 ns
- Input and output timing reference levels: 1.5 V
- Output load: See figures (Including scope and jig)

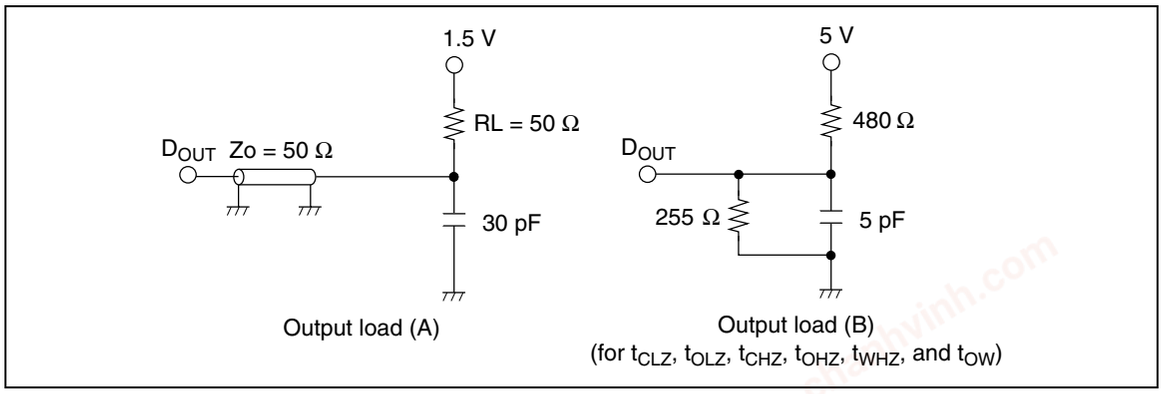

Read Cycle

		R1RP0408D					
		10ns version		12ns version			
Parameter	Symbol	Min	Max	Min	Max	Unit	Notes
Read cycle time	t_{RC}	10	—	12	—	ns	
Address access time	t_{AA}	—	10	—	12	ns	
Chip select access time	t_{ACS}	—	10	—	12	ns	
Output enable to output valid	t_{OE}	—	5	—	6	ns	
Output hold from address change	t_{OH}	3	—	3	—	ns	
Chip select to output in low-Z	t_{CLZ}	3	—	3	—	ns	1
Output enable to output in low-Z	t_{OLZ}	0	—	0	—	ns	1
Chip deselect to output in high-Z	t_{CHZ}	—	5	—	6	ns	1
Output disable to output in high-Z	t_{OHZ}	—	5	—	6	ns	1

chanhvinh.com

Write Cycle

		R1RP0408D					
		10ns version		12ns version			
Parameter	Symbol	Min	Max	Min	Max	Unit	Notes
Write cycle time	t_{WC}	10	—	12	—	ns	
Address valid to end of write	t_{AW}	7	—	8	—	ns	
Chip select to end of write	t_{CW}	7	—	8	—	ns	9
Write pulse width	t_{WP}	7	—	8	—	ns	8
Address setup time	t_{AS}	0	—	0	—	ns	6
Write recovery time	t_{WR}	0	—	0	—	ns	7
Data to write time overlap	t_{DW}	5	—	6	—	ns	
Data hold from write time	t_{DH}	0	—	0	—	ns	
Write disable to output in low-Z	t_{OW}	3	—	3	—	ns	1
Output disable to output in high-Z	t_{OHZ}	—	5	—	6	ns	1
Write enable to output in high-Z	t_{WHZ}	—	5	—	6	ns	1

Notes:
1. Transition is measured ±200 mV from steady voltage with output load (B). This parameter is sampled and not 100% tested.
2. Address should be valid prior to or coincident with CS# transition low.
3. WE# and/or CS# must be high during address transition time.
4. If CS# and OE# are low during this period, I/O pins are in the output state. Then, the data input signals of opposite phase to the outputs must not be applied to them.
5. If the CS# low transition occurs simultaneously with the WE# low transition or after the WE# transition, output remains a high impedance state.
6. t_{AS} is measured from the latest address transition to the later of CS# or WE# going low.
7. t_{WR} is measured from the earlier of CS# or WE# going high to the first address transition.
8. A write occurs during the overlap of a low CS# and a low WE#. A write begins at the latest transition among CS# going low and WE# going low. A write ends at the earliest transition among CS# going high and WE# going high. t_{WP} is measured from the beginning of write to the end of write.
9. t_{CW} is measured from the later of CS# going low to the end of write.

chanhvinh.com

Timing Waveforms

Read Timing Waveform (1) (WE# = V_{IH})

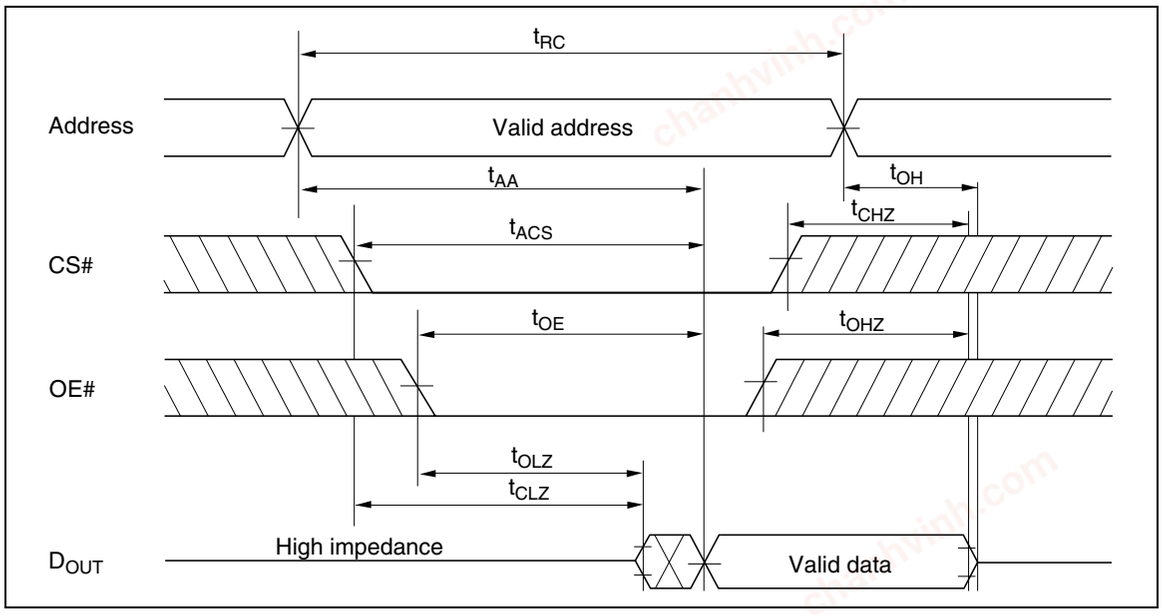

Read Timing Waveform (2) (WE# = V_{IH}, CS# = V_{IL}, OE# = V_{IL})

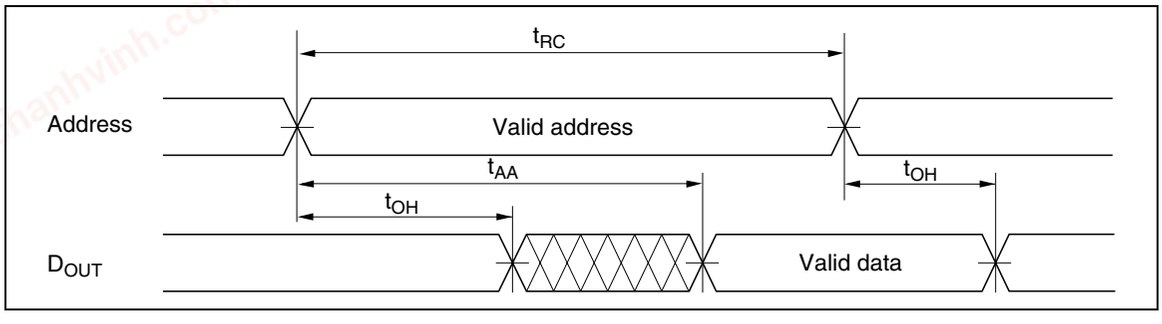

chanhvinh.com

Read Timing Waveform (3) (WE# = V_{IH}, CS# = V_{IL}, OE# = V_{IL})*2

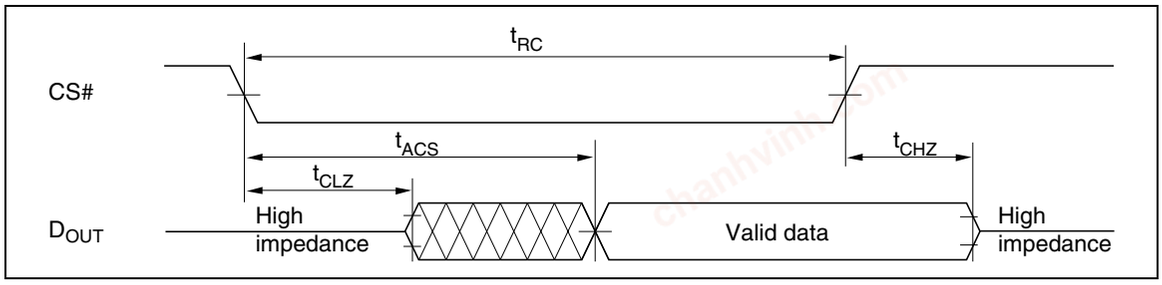

Write Timing Waveform (1) (WE# Controlled)

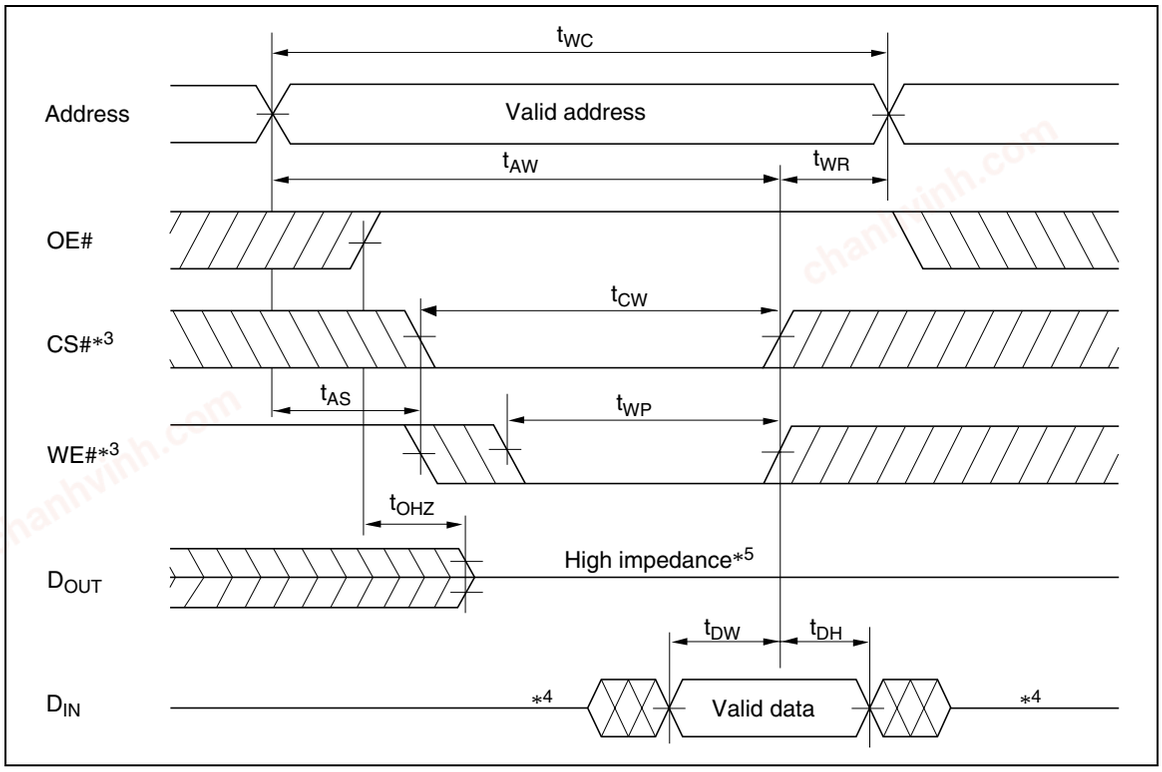

chanhvinh.com

Write Timing Waveform (2) (CS# Controlled)

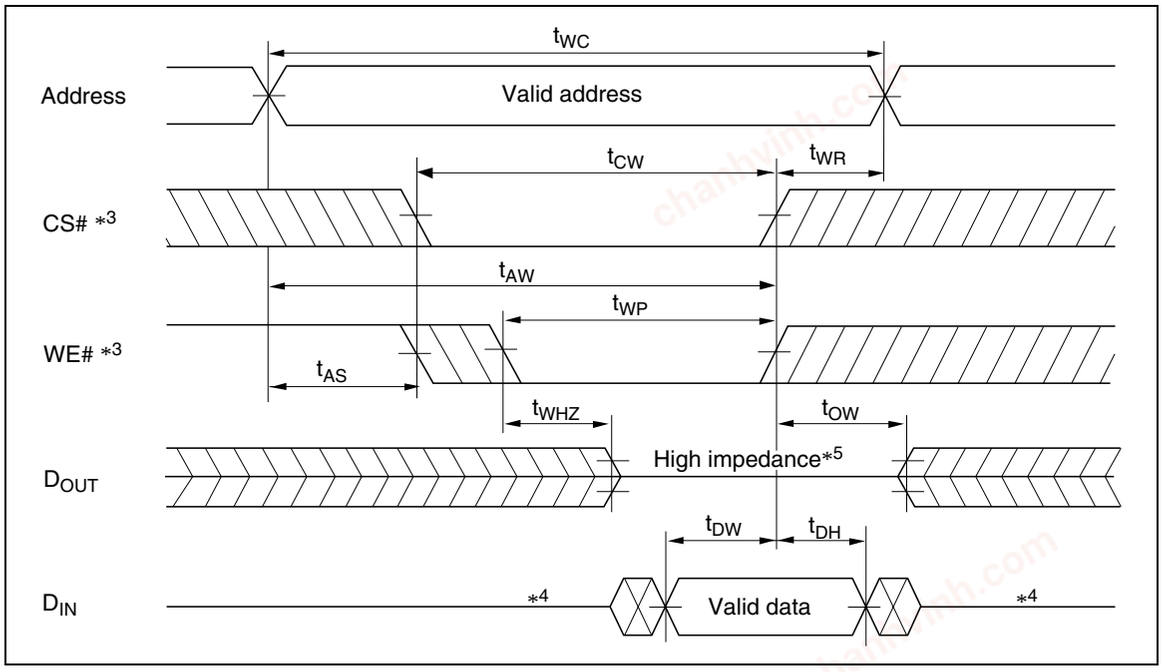

chanhvinh.com

Low V_{CC} Data Retention Characteristics

(Ta = 0 to +70°C)

This characteristics is guaranteed only for L-version.

Parameter	Symbol	Min	Max	Unit	Test conditions
V_{CC} for data retention	V_{DR}	2.0	—	V	$V_{CC} \geq CS\# \geq V_{CC} - 0.2$ V (1) 0 V ≤ V_{IN} ≤ 0.2 V or (2) $V_{CC} \geq V_{IN} \geq V_{CC} - 0.2$ V
Data retention current	I_{CCDR}	—	500	µA	V_{CC} = 3 V, $V_{CC} \geq CS\# \geq V_{CC} - 0.2$ V (1) 0 V ≤ V_{IN} ≤ 0.2 V or (2) $V_{CC} \geq V_{IN} \geq V_{CC} - 0.2$ V
Chip deselect to data retention time	t_{CDR}	0	—	ns	See retention waveform
Operation recovery time	t_R	5	—	ms	

Low V_{CC} Data Retention Timing Waveform

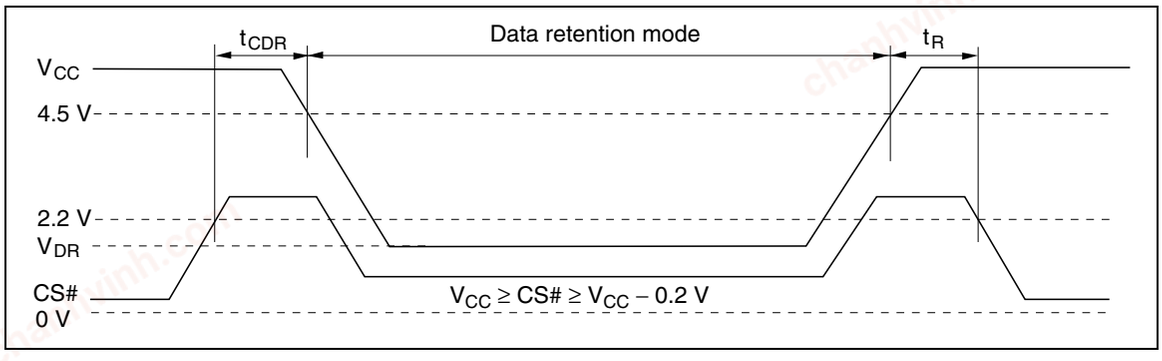

chanhvinh.com

Revision History R1RP0408D Series Data Sheet

Rev.	Date	Contents of Modification	
		Page	Description
0.01	Sep. 30, 2003	—	Initial issue
1.00	Mar.12.2004	—	Deletion of Preliminary
2.00	Dec.01.2008	—	Part Number 10ns Version Adding
		P1	Features Access time 10ns and operating current 140mA adding
		P2	Order Information Type No R1RP0408DGE-0PR Adding
			DC Characteristics Operating power supply current 10ns parameter adding
		P7	AC Characteristics Read ,Write parameter 10ns parameter adding
		P8/P9	

chanhvinh.com

Renesas Technology Corp. Sales Strategic Planning Div. Nippon Bldg., 2-6-2, Ohte-machi, Chiyoda-ku, Tokyo 100-0004, Japan

Notes:
1. This document is provided for reference purposes only so that Renesas customers may select the appropriate Renesas products for their use. Renesas neither makes warranties or representations with respect to the accuracy or completeness of the information contained in this document nor grants any license to any intellectual property rights or any other rights of Renesas or any third party with respect to the information in this document.
2. Renesas shall have no liability for damages or infringement of any intellectual property or other rights arising out of the use of any information in this document, including, but not limited to, product data, diagrams, charts, programs, algorithms, and application circuit examples.
3. You should not use the products or the technology described in this document for the purpose of military applications such as the development of weapons of mass destruction or for the purpose of any other military use. When exporting the products or technology described herein, you should follow the applicable export control laws and regulations, and procedures required by such laws and regulations.
4. All information included in this document such as product data, diagrams, charts, programs, algorithms, and application circuit examples, is current as of the date this document is issued. Such information, however, is subject to change without any prior notice. Before purchasing or using any Renesas products listed in this document, please confirm the latest product information with a Renesas sales office. Also, please pay regular and careful attention to additional and different information to be disclosed by Renesas such as that disclosed through our website. (http://www.renesas.com)
5. Renesas has used reasonable care in compiling the information included in this document, but Renesas assumes no liability whatsoever for any damages incurred as a result of errors or omissions in the information included in this document.
6. When using or otherwise relying on the information in this document, you should evaluate the information in light of the total system before deciding about the applicability of such information to the intended application. Renesas makes no representations, warranties or guaranties regarding the suitability of its products for any particular application and specifically disclaims any liability arising out of the application and use of the information in this document or Renesas products.
7. With the exception of products specified by Renesas as suitable for automobile applications, Renesas products are not designed, manufactured or tested for applications or otherwise in systems the failure or malfunction of which may cause a direct threat to human life or create a risk of human injury or which require especially high quality and reliability such as safety systems, or equipment or systems for transportation and traffic, healthcare, combustion control, aerospace and aeronautics, nuclear power, or undersea communication transmission. If you are considering the use of our products for such purposes, please contact a Renesas sales office beforehand. Renesas shall have no liability for damages arising out of the uses set forth above.
8. Notwithstanding the preceding paragraph, you should not use Renesas products for the purposes listed below:
   (1) artificial life support devices or systems
   (2) surgical implantations
   (3) healthcare intervention (e.g., excision, administration of medication, etc.)
   (4) any other purposes that pose a direct threat to human life
   Renesas shall have no liability for damages arising out of the uses set forth in the above and purchasers who elect to use Renesas products in any of the foregoing applications shall indemnify and hold harmless Renesas Technology Corp., its affiliated companies and their officers, directors, and employees against any and all damages arising out of such applications.
9. You should use the products described herein within the range specified by Renesas, especially with respect to the maximum rating, operating supply voltage range, movement power voltage range, heat radiation characteristics, installation and other product characteristics. Renesas shall have no liability for malfunctions or damages arising out of the use of Renesas products beyond such specified ranges.
10. Although Renesas endeavors to improve the quality and reliability of its products, IC products have specific characteristics such as the occurrence of failure at a certain rate and malfunctions under certain use conditions. Please be sure to implement safety measures to guard against the possibility of physical injury, and injury or damage caused by fire in the event of the failure of a Renesas product, such as safety design for hardware and software including but not limited to redundancy, fire control and malfunction prevention, appropriate treatment for aging degradation or any other applicable measures. Among others, since the evaluation of microcomputer software alone is very difficult, please evaluate the safety of the final products or system manufactured by you.
11. In case Renesas products listed in this document are detached from the products to which the Renesas products are attached or affixed, the risk of accident such as swallowing by infants and small children is very high. You should implement safety measures so that Renesas products may not be easily detached from your products. Renesas shall have no liability for damages arising out of such detachment.
12. This document may not be reproduced or duplicated, in any form, in whole or in part, without prior written approval from Renesas.
13. Please contact a Renesas sales office if you have any questions regarding the information contained in this document, Renesas semiconductor products, or if you have any other inquiries.

RENESAS SALES OFFICES

http://www.renesas.com

Refer to "**http://www.renesas.com/en/network**" for the latest and detailed information.

Renesas Technology America, Inc.
450 Holger Way, San Jose, CA 95134-1368, U.S.A
Tel: <1> (408) 382-7500, Fax: <1> (408) 382-7501

Renesas Technology Europe Limited
Dukes Meadow, Millboard Road, Bourne End, Buckinghamshire, SL8 5FH, U.K.
Tel: <44> (1628) 585-100, Fax: <44> (1628) 585-900

Renesas Technology (Shanghai) Co., Ltd.
Unit 204, 205, AZIACenter, No.1233 Lujiazui Ring Rd, Pudong District, Shanghai, China 200120
Tel: <86> (21) 5877-1818, Fax: <86> (21) 6887-7858/7898

Renesas Technology Hong Kong Ltd.
7th Floor, North Tower, World Finance Centre, Harbour City, Canton Road, Tsimshatsui, Kowloon, Hong Kong
Tel: <852> 2265-6688, Fax: <852> 2377-3473

Renesas Technology Taiwan Co., Ltd.
10th Floor, No.99, Fushing North Road, Taipei, Taiwan
Tel: <886> (2) 2715-2888, Fax: <886> (2) 3518-3399

Renesas Technology Singapore Pte. Ltd.
1 Harbour Front Avenue, #06-10, Keppel Bay Tower, Singapore 098632
Tel: <65> 6213-0200, Fax: <65> 6278-8001

Renesas Technology Korea Co., Ltd.
Kukje Center Bldg. 18th Fl., 191, 2-ka, Hangang-ro, Yongsan-ku, Seoul 140-702, Korea
Tel: <82> (2) 796-3115, Fax: <82> (2) 796-2145

Renesas Technology Malaysia Sdn. Bhd
Unit 906, Block B, Menara Amcorp, Amcorp Trade Centre, No.18, Jln Persiaran Barat, 46050 Petaling Jaya, Selangor Darul Ehsan, Malaysia
Tel: <603> 7955-9390, Fax: <603> 7955-9510

© 2008. Renesas Technology Corp., All rights reserved. Printed in Japan.

Colophon .7.2