chanhvinh.com

R1LV0108E Series

1Mb Advanced LPSRAM (128k word x 8bit)

R10DS0152EJ0100
Rev.1.00
2013.6.21

Description

The R1LV0108E Series is a family of low voltage 1-Mbit static RAMs organized as 131,072-word by 8-bit, fabricated by Renesas's high-performance 0.15um CMOS and TFT technologies. The R1LV0108E Series has realized higher density, higher performance and low power consumption. The R1LV0108E Series is suitable for memory applications where a simple interfacing, battery operating and battery backup are the important design objectives. It has been packaged in 32-pin SOP,32-pin TSOP and 32-pin sTSOP.

Features

- Single 2.7~3.6V power supply
- Small stand-by current: 0.6µA (3.0V, typical)
- No clocks, No refresh
- All inputs and outputs are TTL compatible.
- Easy memory expansion by CS1# and CS2
- Common Data I/O
- Three-state outputs: OR-tie Capability
- OE# prevents data contention on the I/O bus

chanhvinh.com

Ordering Information

Orderable Part Name	Access time	Temperature Range	Package	Shipping Container	Quantity
R1LV0108ESN-5SR#B*	55 ns	0 ~ +70°C	525-mil 32-pin plastic SOP PRSP0032DF-A (32P2S-A)	Tube	Max. 25pcs/Tube Max. 225pcs/Inner Bag Max. 900pcs/Inner Box
R1LV0108ESN-5SI#B*		-40 ~ +85°C			
R1LV0108ESN-7SR#B*	70 ns	0 ~ +70°C			
R1LV0108ESN-7SI#B*		-40 ~ +85°C			
R1LV0108ESN-5SR#S*	55 ns	0 ~ +70°C		Embossed tape	1000pcs/Reel
R1LV0108ESN-5SI#S*		-40 ~ +85°C			
R1LV0108ESN-7SR#S*	70 ns	0 ~ +70°C			
R1LV0108ESN-7SI#S*		-40 ~ +85°C			
R1LV0108ESA-5SR#B*	55 ns	0 ~ +70°C	8mm×13.4mm 32-pin plastic sTSOP (normal-bend type) PTSA0032KB-A (32P3K-B)	Tray	Max. 234pcs/Tray Max. 1872pcs/Inner Box
R1LV0108ESA-5SI#B*		-40 ~ +85°C			
R1LV0108ESA-7SR#B*	70 ns	0 ~ +70°C			
R1LV0108ESA-7SI#B*		-40 ~ +85°C			
R1LV0108ESA-5SR#S*	55 ns	0 ~ +70°C		Embossed tape	1000pcs/Reel
R1LV0108ESA-5SI#S*		-40 ~ +85°C			
R1LV0108ESA-7SR#S*	70 ns	0 ~ +70°C			
R1LV0108ESA-7SI#S*		-40 ~ +85°C			
R1LV0108ESF-5SR#B*	55 ns	0 ~ +70°C	8mm×20mm 32-pin plastic TSOP (normal-bend type) PTSA0032KA-A (32P3H-E)	Tray	Max. 156pcs/Tray Max. 1248pcs/Inner Box
R1LV0108ESF-5SI#B*		-40 ~ +85°C			
R1LV0108ESF-7SR#B*	70 ns	0 ~ +70°C			
R1LV0108ESF-7SI#B*		-40 ~ +85°C			
R1LV0108ESF-5SR#S*	55 ns	0 ~ +70°C		Embossed tape	1000pcs/Reel
R1LV0108ESF-5SI#S*		-40 ~ +85°C			
R1LV0108ESF-7SR#S*	70 ns	0 ~ +70°C			
R1LV0108ESF-7SI#S*		-40 ~ +85°C			

chanhvinh.com

Pin Arrangement

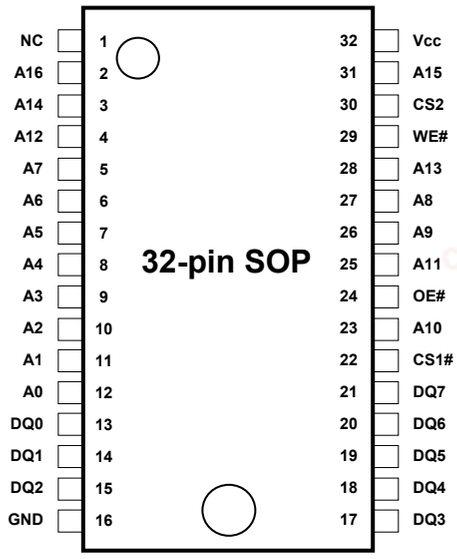

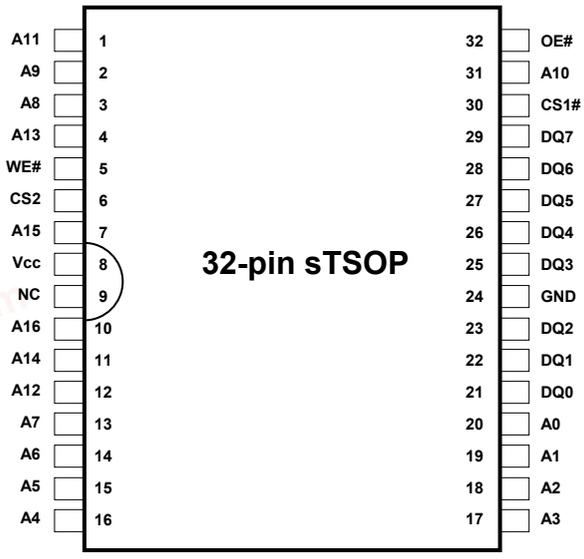

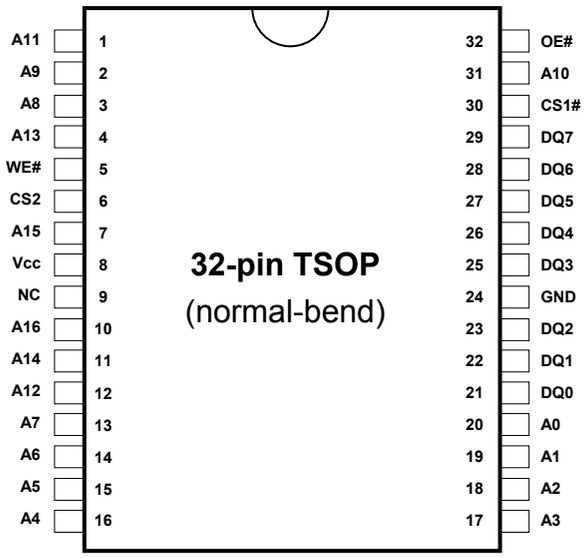

chanhvinh.com

Pin Description

Pin name	Function
Vcc	Power supply
Vss	Ground
A0 to A16	Address input
DQ0 to DQ7	Data input/output
CS1#	Chip select 1
CS2	Chip select 2
WE#	Write enable
OE#	Output enable
NC	Non connection

Block Diagram

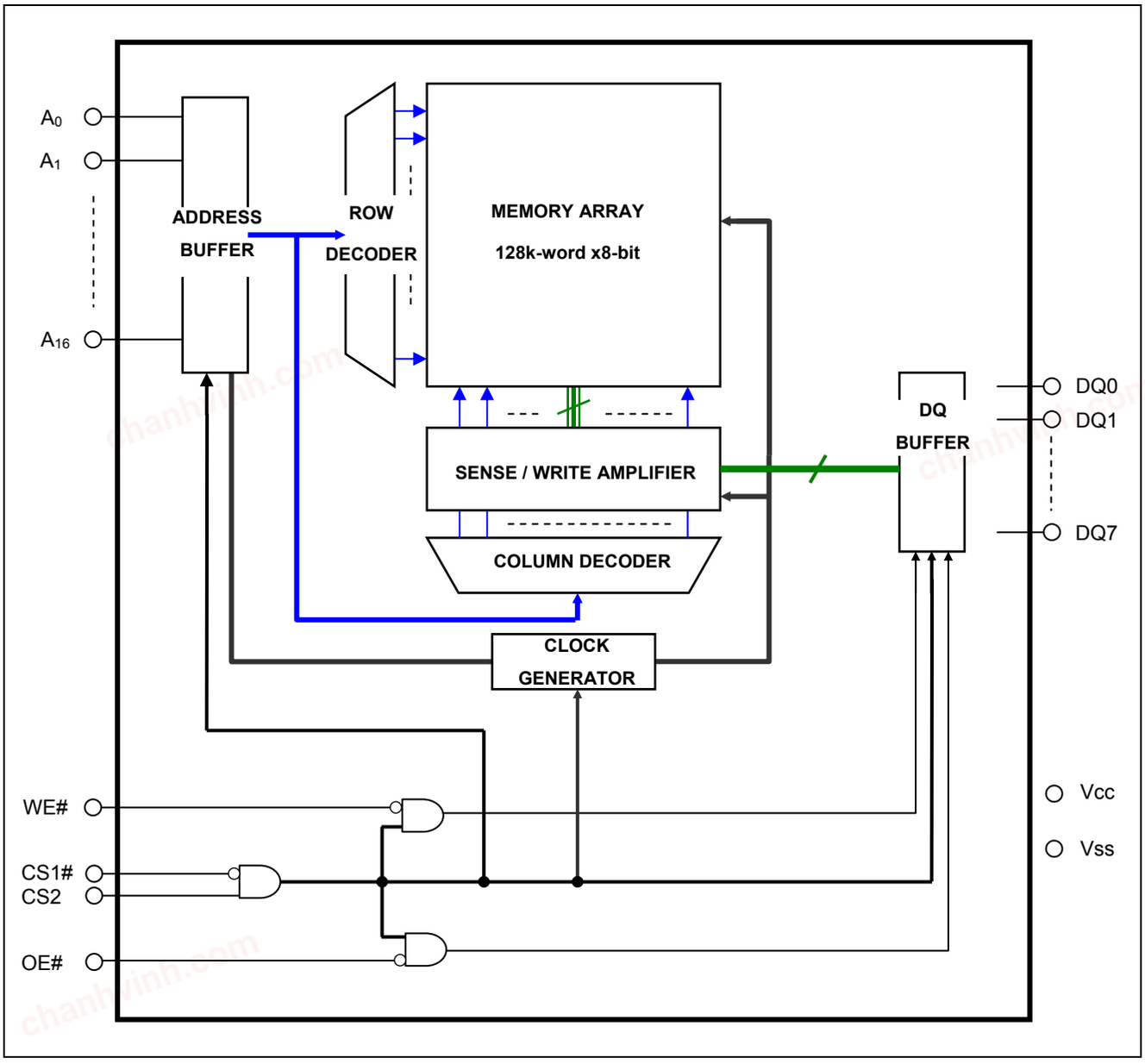

chanhvinh.com

Operation Table

CS1#	CS2	WE#	OE#	DQ0~7	Operation
X	L	X	X	High-Z	Stand-by
H	X	X	X	High-Z	Stand-by
L	H	L	X	Din	Write
L	H	H	L	Dout	Read
L	H	H	H	High-Z	Output disable

Note 1. H: V_{IH} L:V_{IL} X: V_{IH} or V_{IL}

Absolute Maximum

Parameter	Symbol	Value		unit
Power supply voltage relative to Vss	Vcc	-0.3 to +4.6		V
Terminal voltage on any pin relative to Vss	V_T	-0.3[*1] to Vcc+0.3[*2]		V
Power dissipation	P_T	0.7		W
Operation temperature	Topr[*3]	R Ver.	0 to +70	°C
		I Ver.	-40 to +85	
Storage temperature range	Tstg	-65 to 150		°C
Storage temperature range under bias	Tbias[*3]	R Ver.	0 to +70	°C
		I Ver.	-40 to +85	

Note 1. –3.0V for pulse ≤ 30ns (full width at half maximum)
2. Maximum voltage is +4.6V.
3. Ambient temperature range depends on R/I-version. Please see table on page 1.

chanhvinh.com

DC Operating Conditions

Parameter		Symbol	Min.	Typ.	Max.	Unit	Note
Supply voltage		Vcc	2.7	3.0	3.6	V	
		Vss	0	0	0	V	
Input high voltage		V_{IH}	2.0	-	Vcc+0.3	V	
Input low voltage		V_{IL}	-0.3	-	0.6	V	1
Ambient temperature range	R Ver.	Ta	0	-	+70	°C	2
	I Ver.		-40	-	+85	°C	2

Note 1. –3.0V for pulse ≤ 30ns (full width at half maximum)
2. Ambient temperature range depends on R/I-version. Please see table on page 1.

DC Characteristics

Parameter	Symbol	Min.	Typ.	Max.	Unit	Test conditions	
Input leakage current	$\lvert I_{LI} \rvert$	-	-	1	µA	Vin = Vss to Vcc	
Output leakage current	$\lvert I_{LO} \rvert$	-	-	1	µA	CS1# =V_{IH} or CS2 =V_{IL} or OE# =V_{IH}, VI/O =Vss to Vcc	
Average operating current	I_{CC1}	-	15	25	mA	Min. cycle, duty =100%, II/O = 0mA CS1# =V_{IL}, CS2 =V_{IH}, Others = V_{IH}/V_{IL}	
	I_{CC2}	-	2	5	mA	Cycle =1µs, duty =100%, II/O = 0mA CS1# ≤ 0.2V, CS2 ≥ Vcc-0.2V, V_{IH} ≥ Vcc-0.2V, V_{IL} ≤ 0.2V	
Standby current	I_{SB}	-	-	0.33	mA	"CS2 =V_{IL}" or "CS2 = V_{IH} and CS1# =V_{IH}", Others = Vss to Vcc	
Standby current	I_{SB1}	-	0.6*1	2	µA	~+25°C	Vin = Vss to Vcc (1) CS2 ≤ 0.2V or (2) CS1# ≥ Vcc-0.2V, CS2 ≥ Vcc-0.2V
		-	-	3	µA	~+40°C	
		-	-	8	µA	~+70°C	
		-	-	10	µA	~+85°C	
Output high voltage	V_{OH}	2.4	-	-	V	I_{OH} = -0.5mA	
	V_{OH2}	Vcc - 0.5	-	-	V	I_{OH} = -0.05mA	
Output low voltage	V_{OL}	-	-	0.4	V	I_{OL} = 2mA	

Note 1. Typical parameter indicates the value for the center of distribution at 3.0V (Ta= 25ºC), and not 100% tested.

Capacitance

(Vcc = 2.7V ~ 3.6V, f = 1MHz, Ta = 0 ~ +70°C / -40 ~ +85°C*2)

Parameter	Symbol	Min.	Typ.	Max.	Unit	Test conditions	Note
Input capacitance	C in	-	-	8	pF	Vin =0V	1
Input / output capacitance	$C_{I/O}$	-	-	10	pF	VI/O =0V	1

Note 1. This parameter is sampled and not 100% tested.
2. Ambient temperature range depends on R/I-version. Please see table on page 1.

chanhvinh.com

AC Characteristics

Test Conditions (Vcc = 2.7V ~ 3.6V, Ta = 0 ~ +70°C / -40 ~ +85°C[*1])

- Input pulse levels: VIL = 0.4V, VIH = 2.2V
- Input rise and fall time: 5ns
- Input and output timing reference level: 1.5V
- Output load: See figures (Including scope and jig)

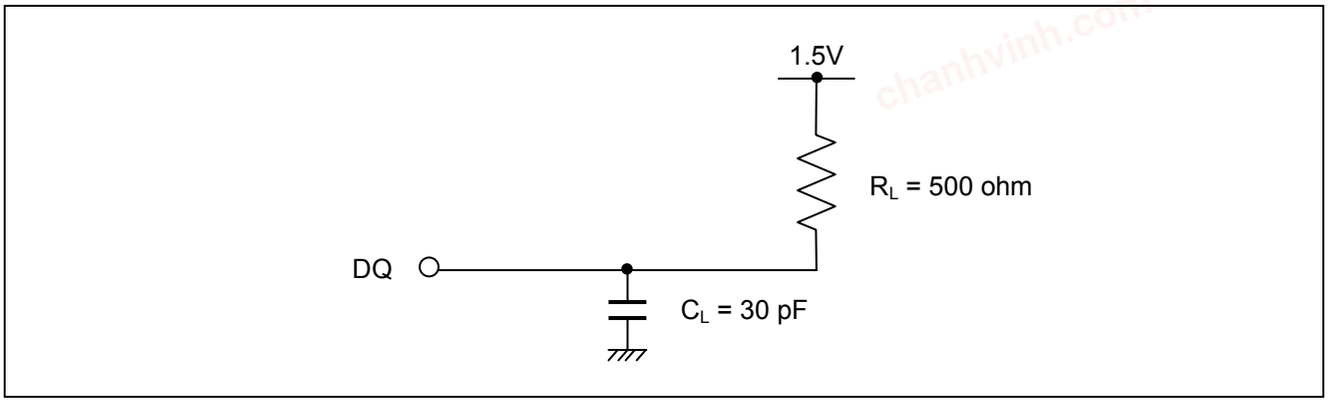

Note 1. Ambient temperature range depends on R/I-version. Please see table on page 1.

chanhvinh.com

Read Cycle

Parameter	Symbol	R1LV0108E**-5**		R1LV0108E**-7**		Unit	Note
		Min.	Max.	Min.	Max.		
Read cycle time	t_{RC}	55	-	70	-	ns	
Address access time	t_{AA}	-	55	-	70	ns	
Chip select access time	t_{ACS1}	-	55	-	70	ns	
	t_{ACS2}	-	55	-	70	ns	
Output enable to output valid	t_{OE}	-	30	-	35	ns	
Output hold from address change	t_{OH}	5	-	10	-	ns	
Chip select to output in low-Z	t_{CLZ1}	5	-	10	-	ns	2,3
	t_{CLZ2}	5	-	10	-	ns	2,3
Output enable to output in low-Z	t_{OLZ}	5	-	5	-	ns	2,3
Chip deselect to output in high-Z	t_{CHZ1}	0	20	0	25	ns	1,2,3
	t_{CHZ2}	0	20	0	25	ns	1,2,3
Output disable to output in high-Z	t_{OHZ}	0	20	0	25	ns	1,2,3

Write Cycle

Parameter	Symbol	R1LV0108E**-5**		R1LV0108E**-7**		Unit	Note
		Min.	Max.	Min.	Max.		
Write cycle time	t_{WC}	55	-	70	-	ns	
Address valid to end of write	t_{AW}	50	-	55	-	ns	
Chip select to end of write	t_{CW}	50	-	55	-	ns	5
Write pulse width	t_{WP}	45	-	50	-	ns	4
Address setup time	t_{AS}	0	-	0	-	ns	6
Write recovery time	t_{WR}	0	-	0	-	ns	7
Data to write time overlap	t_{DW}	25	-	30	-	ns	
Data hold from write time	t_{DH}	0	-	0	-	ns	
Output enable from end of write	t_{OW}	5	-	5	-	ns	2
Output disable to output in high-Z	t_{OHZ}	0	20	0	25	ns	1,2
Write to output in high-Z	t_{WHZ}	0	20	0	25	ns	1,2

Note
1. t_{CHZ}, t_{OHZ} and t_{WHZ} are defined as the time at which the outputs achieve the open circuit conditions and are not referred to output voltage levels.
2. This parameter is sampled and not 100% tested.
3. At any given temperature and voltage condition, t_{HZ} max is less than t_{LZ} min both for a given device and from device to device.
4. A write occurs during the overlap of a low CS1#, a high CS2, a low WE#.
   A write begins at the latest transition among CS1# going low, CS2 going high and WE# going low.
   A write ends at the earliest transition among CS1# going high, CS2 going low and WE# going high.
   t_{WP} is measured from the beginning of write to the end of write.
5. t_{CW} is measured from the later of CS1# going low or CS2 going high to end of write.
6. t_{AS} is measured the address valid to the beginning of write.
7. t_{WR} is measured from the earliest of CS1# or WE# going high or CS2 going low to the end of write cycle.
8. Don't apply inverted phase signal externally when DQ pin is output mode.

chanhvinh.com

Timing Waveforms

Read Cycle

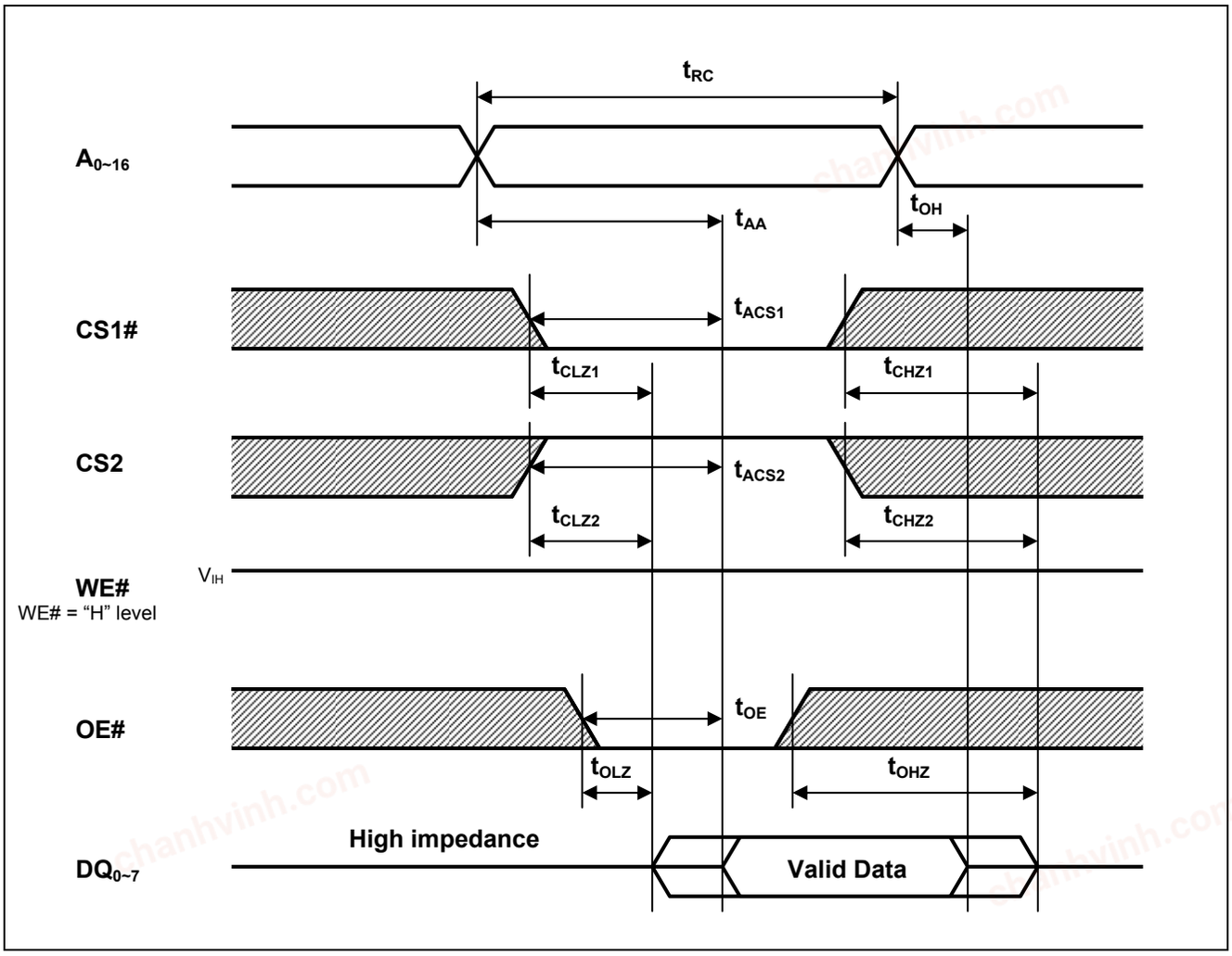

chanhvinh.com

Write Cycle (1) (WE# CLOCK)

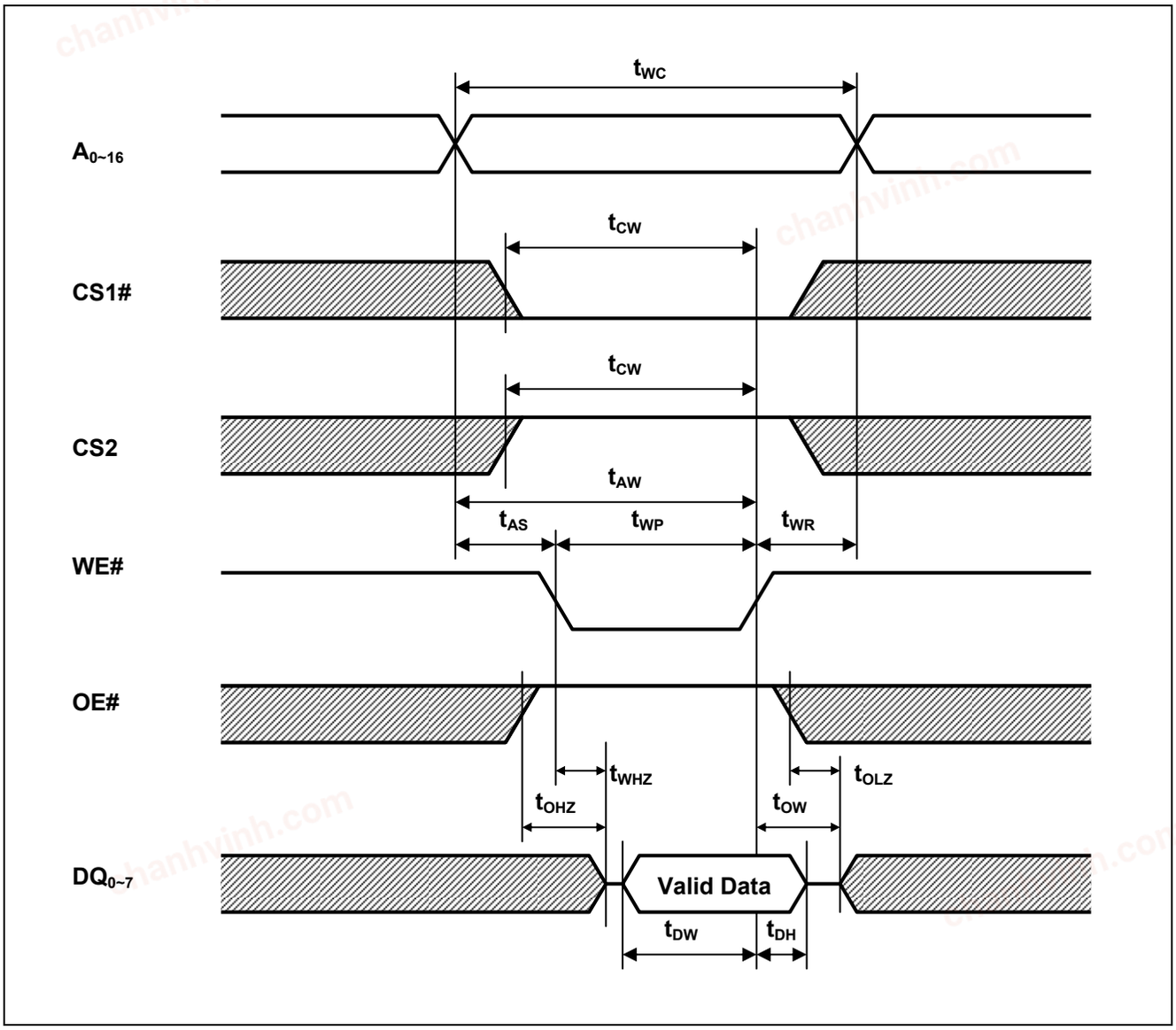

chanhvinh.com

Write Cycle (2) (CS1#, CS2 CLOCK)

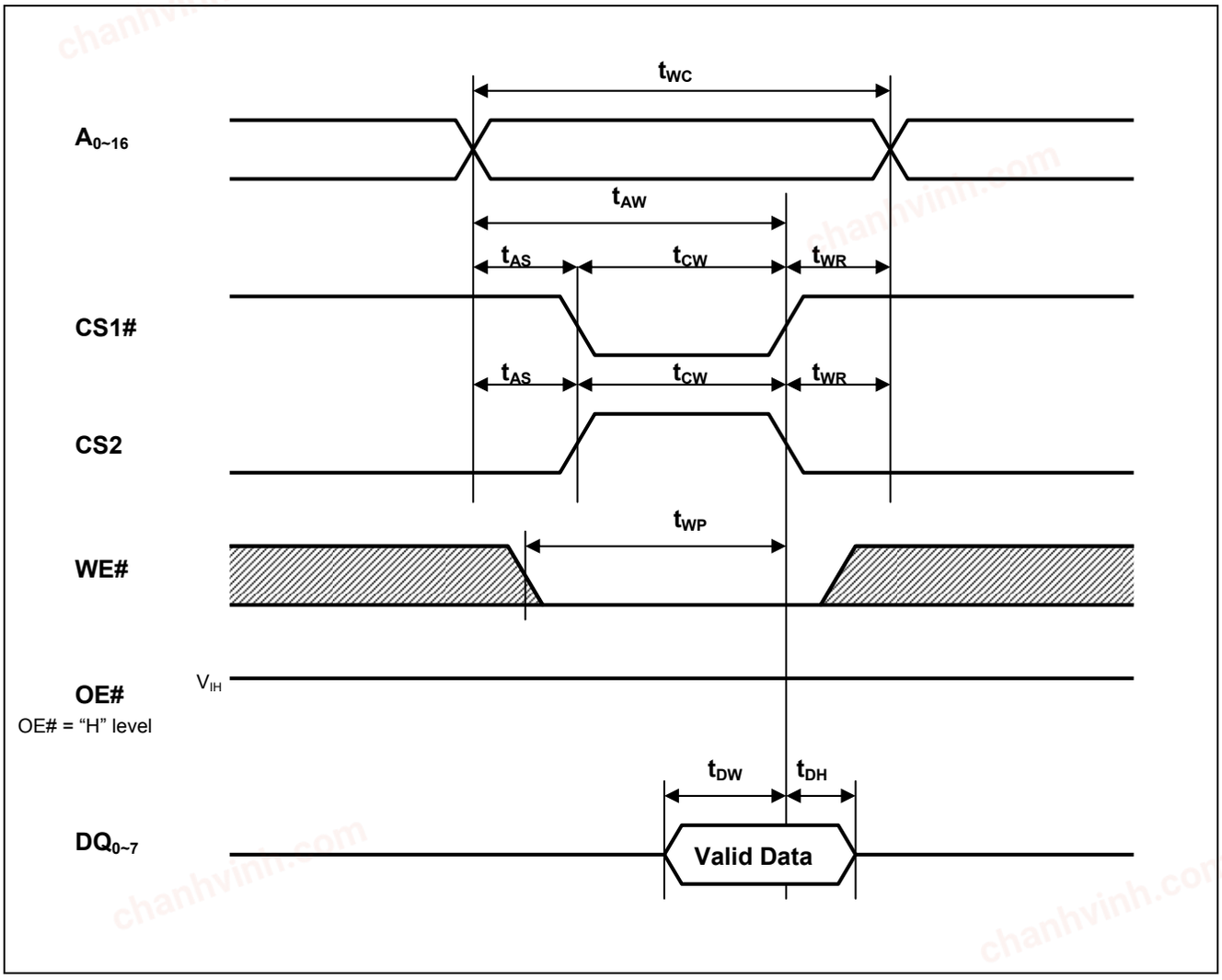

chanhvinh.com

Low Vcc Data Retention Characteristics

Parameter	Symbol	Min.	Typ.	Max.	Unit	Test conditions[*2]	
V_{CC} for data retention	V_{DR}	2.0	-	3.6	V	Vin ≥ 0V (1) 0V ≤ CS2 ≤ 0.2V or (2) CS1# ≥ Vcc-0.2V, CS2 ≥ Vcc-0.2V	
Data retention current	I_{CCDR}	-	0.6[*1]	2	µA	~+25°C	Vcc=3.0V, Vin ≥ 0V (1) 0V ≤ CS2 ≤ 0.2V or (2) CS1# ≥ Vcc-0.2V, CS2 ≥ Vcc-0.2V
		-	-	3	µA	~+40°C	
		-	-	8	µA	~+70°C	
		-	-	10	µA	~+85°C	
Chip deselect to data retention time	t_{CDR}	0	-	-	ns	See retention waveform.	
Operation recovery time	t_R	5	-	-	ms		

Note 1. Typical parameter indicates the value for the center of distribution at 3.0V (Ta= 25ºC), and not 100% tested.

2. CS2 controls address buffer, WE# buffer, CS1# buffer, OE# buffer and Din buffer. If CS2 controls data retention mode, Vin levels (address, WE#, CS1#, OE#, DQ) can be in the high impedance state.
If CS1# controls data retention mode, CS2 must be CS2 ≥ Vcc-0.2V or 0V ≤ CS2 ≤ 0.2V. The other input levels (address, WE# ,OE#, DQ) can be in the high impedance state.

Low Vcc Data Retention Timing Waveforms

(1) CS1# Controlled

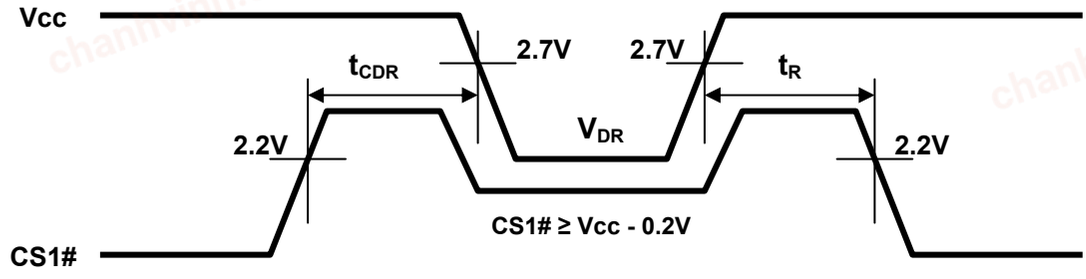

(2) CS2 Controlled

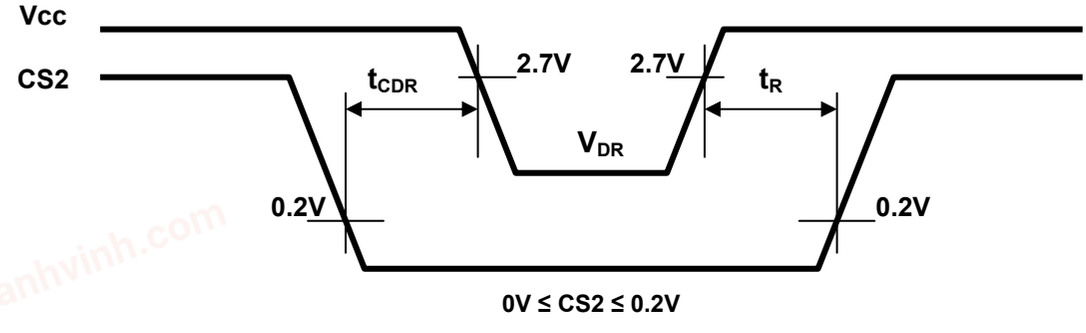

chanhvinh.com

Revision History	R1LV0108E Series Data Sheet

Rev.	Date	Description	
		Page	Summary
1.00	2013.6.21	-	First Edition issued

chanhvinh.com

All trademarks and registered trademarks are the property of their respective owners.

chanhvinh.com

Notice

1. Descriptions of circuits, software and other related information in this document are provided only to illustrate the operation of semiconductor products and application examples. You are fully responsible for the incorporation of these circuits, software, and information in the design of your equipment. Renesas Electronics assumes no responsibility for any losses incurred by you or third parties arising from the use of these circuits, software, or information.
2. Renesas Electronics has used reasonable care in preparing the information included in this document, but Renesas Electronics does not warrant that such information is error free. Renesas Electronics assumes no liability whatsoever for any damages incurred by you resulting from errors in or omissions from the information included herein.
3. Renesas Electronics does not assume any liability for infringement of patents, copyrights, or other intellectual property rights of third parties by or arising from the use of Renesas Electronics products or technical information described in this document. No license, express, implied or otherwise, is granted hereby under any patents, copyrights or other intellectual property rights of Renesas Electronics or others.
4. You should not alter, modify, copy, or otherwise misappropriate any Renesas Electronics product, whether in whole or in part. Renesas Electronics assumes no responsibility for any losses incurred by you or third parties arising from such alteration, modification, copy or otherwise misappropriation of Renesas Electronics product.
5. Renesas Electronics products are classified according to the following two quality grades: "Standard" and "High Quality". The recommended applications for each Renesas Electronics product depends on the product's quality grade, as indicated below.
   "Standard": Computers; office equipment; communications equipment; test and measurement equipment; audio and visual equipment; home electronic appliances; machine tools; personal electronic equipment; and industrial robots etc.
   "High Quality": Transportation equipment (automobiles, trains, ships, etc.); traffic control systems; anti-disaster systems; anti-crime systems; and safety equipment etc.
   Renesas Electronics products are neither intended nor authorized for use in products or systems that may pose a direct threat to human life or bodily injury (artificial life support devices or systems, surgical implantations etc.), or may cause serious property damages (nuclear reactor control systems, military equipment etc.). You must check the quality grade of each Renesas Electronics product before using it in a particular application. You may not use any Renesas Electronics product for any application for which it is not intended. Renesas Electronics shall not be in any way liable for any damages or losses incurred by you or third parties arising from the use of any Renesas Electronics product for which the product is not intended by Renesas Electronics.
6. You should use the Renesas Electronics products described in this document within the range specified by Renesas Electronics, especially with respect to the maximum rating, operating supply voltage range, movement power voltage range, heat radiation characteristics, installation and other product characteristics. Renesas Electronics shall have no liability for malfunctions or damages arising out of the use of Renesas Electronics products beyond such specified ranges.
7. Although Renesas Electronics endeavors to improve the quality and reliability of its products, semiconductor products have specific characteristics such as the occurrence of failure at a certain rate and malfunctions under certain use conditions. Further, Renesas Electronics products are not subject to radiation resistance design. Please be sure to implement safety measures to guard them against the possibility of physical injury, and injury or damage caused by fire in the event of the failure of a Renesas Electronics product, such as safety design for hardware and software including but not limited to redundancy, fire control and malfunction prevention, appropriate treatment for aging degradation or any other appropriate measures. Because the evaluation of microcomputer software alone is very difficult, please evaluate the safety of the final products or systems manufactured by you.
8. Please contact a Renesas Electronics sales office for details as to environmental matters such as the environmental compatibility of each Renesas Electronics product. Please use Renesas Electronics products in compliance with all applicable laws and regulations that regulate the inclusion or use of controlled substances, including without limitation, the EU RoHS Directive. Renesas Electronics assumes no liability for damages or losses occurring as a result of your noncompliance with applicable laws and regulations.
9. Renesas Electronics products and technology may not be used for or incorporated into any products or systems whose manufacture, use, or sale is prohibited under any applicable domestic or foreign laws or regulations. You should not use Renesas Electronics products or technology described in this document for any purpose relating to military applications or use by the military, including but not limited to the development of weapons of mass destruction. When exporting the Renesas Electronics products or technology described in this document, you should comply with the applicable export control laws and regulations and follow the procedures required by such laws and regulations.
10. It is the responsibility of the buyer or distributor of Renesas Electronics products, who distributes, disposes of, or otherwise places the product with a third party, to notify such third party in advance of the contents and conditions set forth in this document, Renesas Electronics assumes no responsibility for any losses incurred by you or third parties as a result of unauthorized use of Renesas Electronics products.
11. This document may not be reproduced or duplicated in any form, in whole or in part, without prior written consent of Renesas Electronics.
12. Please contact a Renesas Electronics sales office if you have any questions regarding the information contained in this document or Renesas Electronics products, or if you have any other inquiries.

(Note 1) "Renesas Electronics" as used in this document means Renesas Electronics Corporation and also includes its majority-owned subsidiaries.

(Note 2) "Renesas Electronics product(s)" means any product developed or manufactured by or for Renesas Electronics.

RENESAS

SALES OFFICES

Renesas Electronics Corporation

http://www.renesas.com

Refer to "http://www.renesas.com/" for the latest and detailed information.

Renesas Electronics America Inc.
2880 Scott Boulevard Santa Clara, CA 95050-2554, U.S.A.
Tel: +1-408-588-6000, Fax: +1-408-588-6130

Renesas Electronics Canada Limited
1101 Nicholson Road, Newmarket, Ontario L3Y 9C3, Canada
Tel: +1-905-898-5441, Fax: +1-905-898-3220

Renesas Electronics Europe Limited
Dukes Meadow, Millboard Road, Bourne End, Buckinghamshire, SL8 5FH, U.K
Tel: +44-1628-651-700, Fax: +44-1628-651-804

Renesas Electronics Europe GmbH
Arcadiastrasse 10, 40472 Düsseldorf, Germany
Tel: +49-211-65030, Fax: +49-211-6503-1327

Renesas Electronics (China) Co., Ltd.
7th Floor, Quantum Plaza, No.27 ZhiChunLu Haidian District, Beijing 100083, P.R.China
Tel: +86-10-8235-1155, Fax: +86-10-8235-7679

Renesas Electronics (Shanghai) Co., Ltd.
Unit 204, 205, AZIA Center, No.1233 Lujiazui Ring Rd., Pudong District, Shanghai 200120, China
Tel: +86-21-5877-1818, Fax: +86-21-6887-7858 / -7898

Renesas Electronics Hong Kong Limited
Unit 1601-1613, 16/F., Tower 2, Grand Century Place, 193 Prince Edward Road West, Mongkok, Kowloon, Hong Kong
Tel: +852-2886-9318, Fax: +852 2886-9022/9044

Renesas Electronics Taiwan Co., Ltd.
13F, No. 363, Fu Shing North Road, Taipei, Taiwan
Tel: +886-2-8175-9600, Fax: +886 2-8175-9670

Renesas Electronics Singapore Pte. Ltd.
80 Bendemeer Road, Unit #06-02 Hyflux Innovation Centre Singapore 339949
Tel: +65-6213-0200, Fax: +65-6213-0300

Renesas Electronics Malaysia Sdn.Bhd.
Unit 906, Block B, Menara Amcorp, Amcorp Trade Centre, No. 18, Jln Persiaran Barat, 46050 Petaling Jaya, Selangor Darul Ehsan, Malaysia
Tel: +60-3-7955-9390, Fax: +60-3-7955-9510

Renesas Electronics Korea Co., Ltd.
11F., Samik Lavied' or Bldg., 720-2 Yeoksam-Dong, Kangnam-Ku, Seoul 135-080, Korea
Tel: +82-2-558-3737, Fax: +82-2-558-5141

© 2013 Renesas Electronics Corporation. All rights reserved.
Colophon 2.2