chanhvinh.com

RENESAS

Data Sheet

PS2841-4A,PS2841-4B

R08DS0157EJ0101
Rev.1.01
Feb 25, 2020

WORLD'S SMALLEST CLASS, FOUR CHANNELS 12-PIN ULTRA SHRINK SOP PHOTOCOUPLER

DESCRIPTION

The PS2841-4A and PS2841-4B are optically coupled isolators containing GaAs light emitting diodes and NPN silicon phototransistors.
These products include four channels in a single package for high-density mounting applications.
The PS2841-4A and PS2841-4B are the world's smallest class of photocouplers and realize about 50% reduction in mounting area compared with the PS280x and PS281x Series.

FEATURES

- Ultra small and thin package
  (12-pin ultra shrink SOP, Pin pitch 0.8 mm, 4.4 (L) × 5.6 (W) × 2.5 (H))
- Common lead PS2841-4A: cathode, collector common
  PS2841-4B: anode, collector common
- High current transfer ratio (CTR = 200% TYP. @ I_F = 1mA)
- High isolation voltage (BV = 1 500 Vr.m.s.)
- Pb-Free product
- Ordering number of tape product:
  PS2841-4A-F3: 2 500 pcs/reel
  PS2841-4B-F3: 2 500 pcs/reel
- Safety standards
  - UL approved: UL1577, Single protecion

PIN CONNECTIONS
(Top View)

PS2841-4A

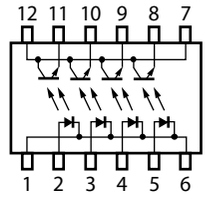

Channel	Anode	Cathode	Emitter	Collector
1 ch	2	1, 6 common	11	7, 12 common
2 ch	3	1, 6 common	10	7, 12 common
3 ch	4	1, 6 common	9	7, 12 common
4 ch	5	1, 6 common	8	7, 12 common

APPLICATIONS

- Programmable logic controllers (PLCs)
- Input and output for function automation
- Hybrid IC

PIN CONNECTIONS
(Top View)

PS2841-4B

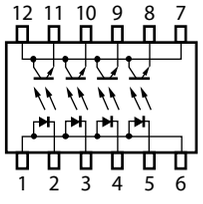

Channel	Anode	Cathode	Emitter	Collector
1 ch	1, 6 common	2	11	7, 12 common
2 ch	1, 6 common	3	10	7, 12 common
3 ch	1, 6 common	4	9	7, 12 common
4 ch	1, 6 common	5	8	7, 12 common

chanhvinh.com

PACKAGE DIMENSIONS (UNIT: mm)

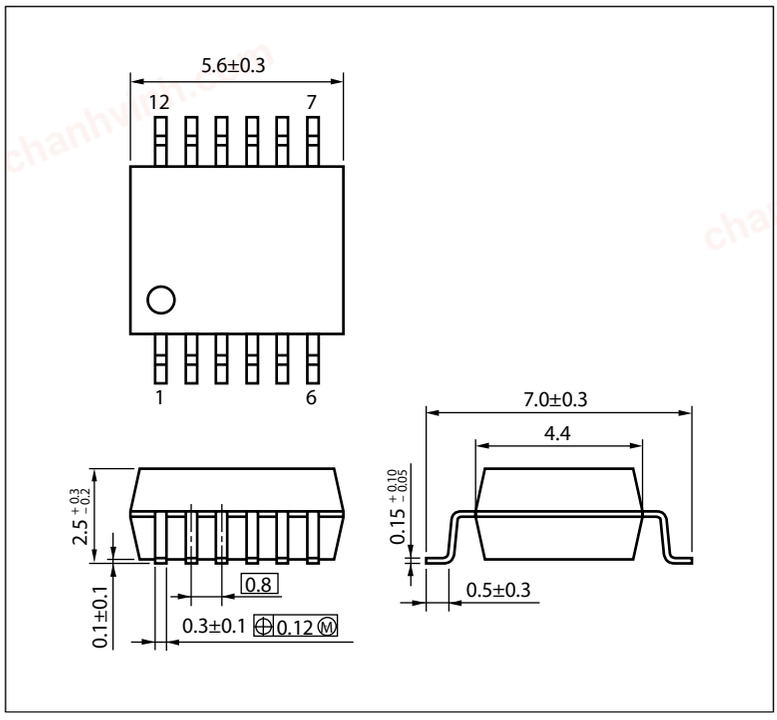

PHOTOCOUPLER CONSTRUCTION

Parameter	Unit (MIN.)
Air Distance	4.0 mm
Creepage Distance	4.0 mm
Isolation Thickness	0.4 mm

Weight (12-pin SSOP) : 0.14 g (typ.)

MARKING EXAMPLE

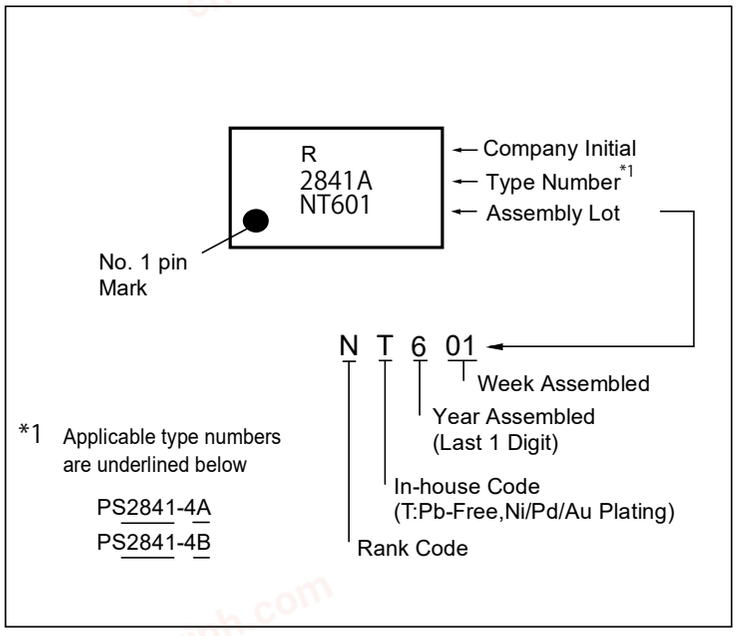

chanhvinh.com

ORDERING INFORMATION

Part Number	Order Number	Solder Plating Specification	Packing Style	Safety Standard Approval	Application Part Number *1
PS2841-4A	PS2841-4A-AX	Pb-Free	20 pcs (Tape 20 pcs cut)	Standard products (UL approved)	PS2841-4A
PS2841-4A-F3	PS2841-4A-F3-AX		Embossed Tape 2 500 pcs/reel		
PS2841-4B	PS2841-4B-AX		20 pcs (Tape 20 pcs cut)		PS2841-4B
PS2841-4B-F3	PS2841-4B-F3-AX		Embossed Tape 2 500 pcs/reel		

Note: *1. For the application of the Safety Standard, following part number should be used.

ABSOLUTE MAXIMUM RATINGS (T_A = 25°C, unless otherwise specified)

Parameter		Symbol	Ratings	Unit
Diode	Forward Current (DC)	I_F	20	mA/ch
	Reverse Voltage	V_R	6	V
	Power Dissipation Derating	ΔI_F /°C	0.2	mA /°C
	Peak Forward Current *1	I_{FP}	0.5	A/ch
Transistor	Collector to Emitter Voltage	V_{CEO}	70	V
	Emitter to Collector Voltage	V_{ECO}	5	V
	Collector Current	I_C	20	mA/ch
	Power Dissipation Derating	ΔP_C/°C	0.4	mW/°C
	Power Dissipation	P_C	40	mW/ch
Isolation Voltage *2		BV	1 500	Vr.m.s.
Operating Ambient Temperature		T_A	–40 to +100	°C
Storage Temperature		T_{stg}	–55 to +125	°C

Notes: *1. PW = 100 μs, Duty Cycle = 1%

*2. AC voltage for 1 minute at T_A = 25°C, RH = 60% between input and output.
Pins 1-6 shorted together, 7-12 shorted together.

chanhvinh.com

ELECTRICAL CHARACTERISTICS (T_A = 25°C)

Parameter		Symbol	Conditions	MIN.	TYP.	MAX.	Unit
Diode	Forward Voltage	V_F	I_F = 1 mA	0.9	1.1	1.2	V
	Reverse Current	I_R	V_R = 5 V			10	μA
	Terminal Capacitance	C_t	V = 0 V, f = 1 MHz		15		pF
Transistor	Collector to Emitter Current	I_{CEO}	I_F = 0 mA, V_{CE} = 24 V			100	nA
Coupled	Current Transfer Ratio (I_C/I_F)	CTR	I_F = 1 mA, V_{CE} = 0.4 V	100	200	400	%
	Optical Leakage Current *1 (1 to 2-ch, 2 to 3-ch, 3 to 4-ch)	I_L	I_F = 5 mA, V_{CE} = 24 V			100	nA
	Collector Saturation Voltage	$V_{CE (sat)}$	I_F = 1 mA, I_C = 0.2 mA		0.13	0.3	V
	Isolation Resistance	R_{I-O}	V_{I-O} = 1 kV_{DC}	10^{11}			Ω
	Isolation Capacitance	C_{I-O}	V = 0 V, f = 1 MHz		0.4		pF
	Turn-on Time *2	t_{on}	V_{CC} = 5 V, I_F = 1 mA, R_L = 5 kΩ		20		μs
	Turn-off Time *2	t_{off}			110		

Notes: *1. The optically induced leakage current is current which can be measured at transistor if LED = ”ON” and LED = ”OFF”.

LED of channel 1 is switched to ”ON”.

At Tr-output of channel 2 a voltage is applied and one can measure a current between emitter and collector.

This is leakage current (at I_F = 5 mA, V_{CEO} = 24 V).

Measurement circuits for optical leakage current

E.g. : In the case of 1 to 2-ch (PS2841-4A)

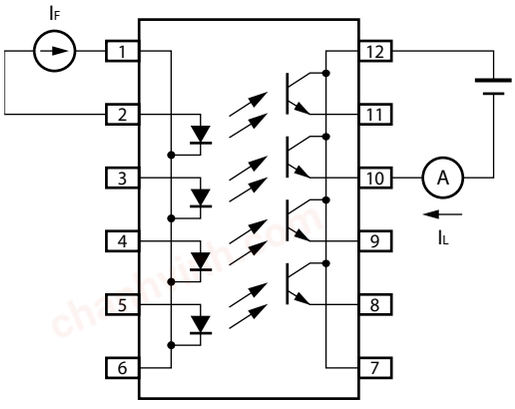

*2. Test circuit for switching time

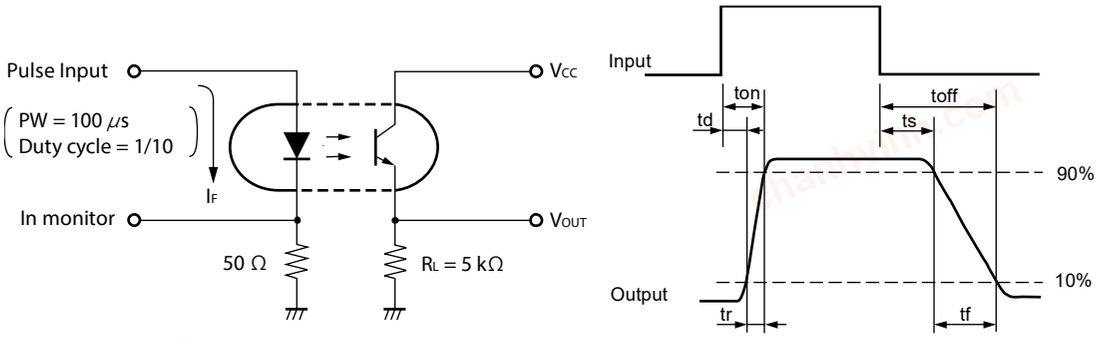

chanhvinh.com

TYPICAL CHARACTERISTICS (T_A = 25°C, unless otherwise specified)

MAXIMUM FORWARD CURRENT vs. AMBIENT TEMPERATURE

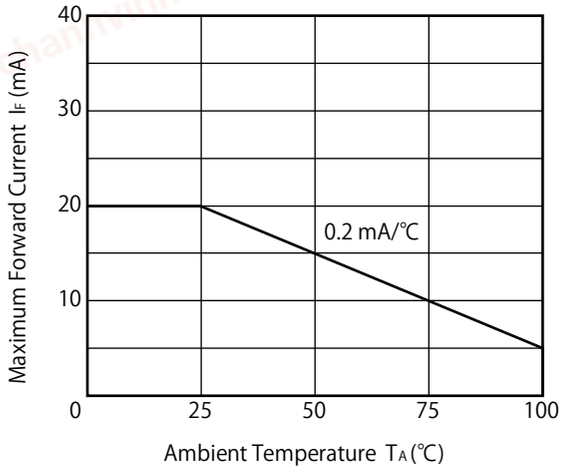

TRANSISTOR POWER DISSIPATION vs. AMBIENT TEMPERATURE

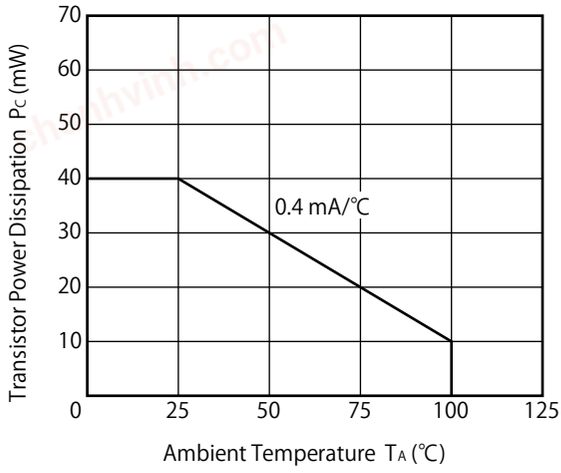

FORWARD CURRENT vs. FORWARD VOLTAGE

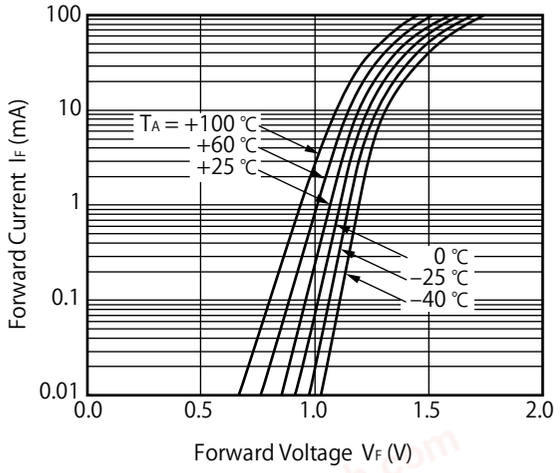

COLLECTOR CURRENT vs. COLLECTOR TO EMITTER VOLTAGE

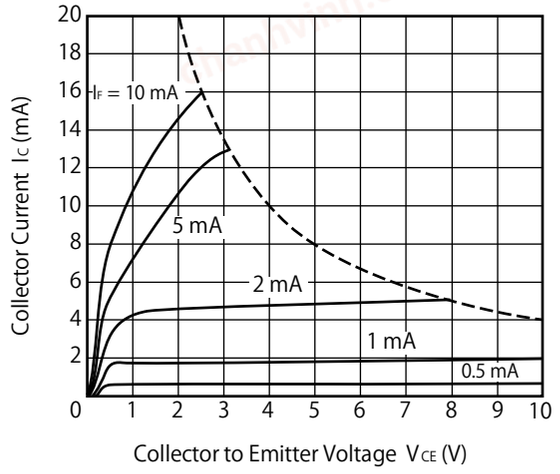

COLLECTOR TO EMITTER DARK CURRENT vs. AMBIENT TEMPERATURE

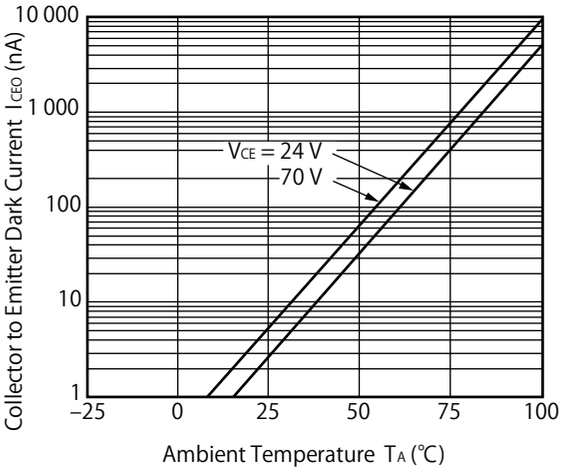

COLLECTOR CURRENT vs. COLLECTOR SATURATION VOLTAGE

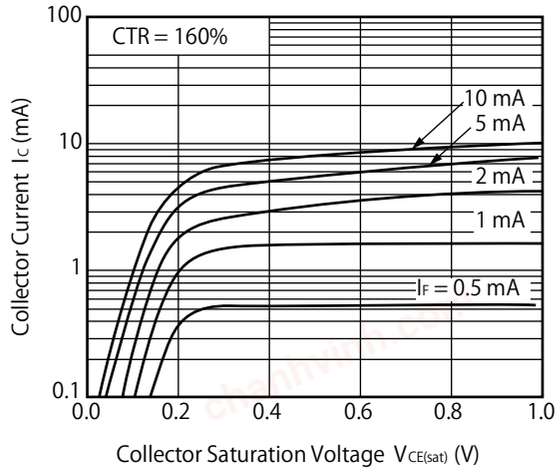

Remark The graphs indicate nominal characteristics.

chanhvinh.com

NORMALIZED CURRENT TRANSFER RATIO vs. AMBIENT TEMPERATURE

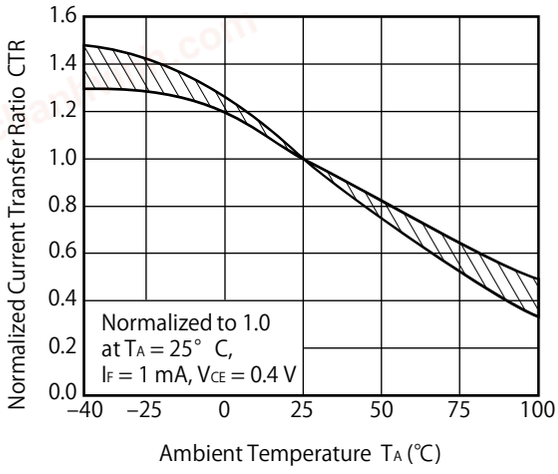

CURRENT TRANSFER RATIO vs. FORWARD CURRENT

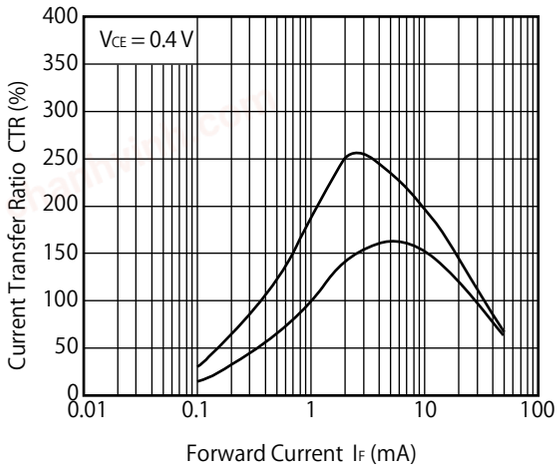

SWITCHING TIME vs. LOAD RESISTANCE

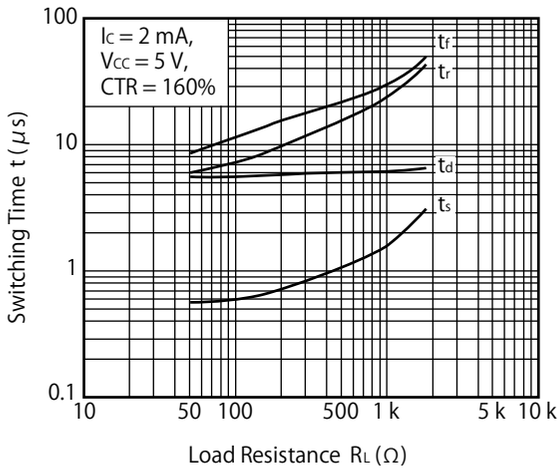

SWITCHING TIME vs. LOAD RESISTANCE

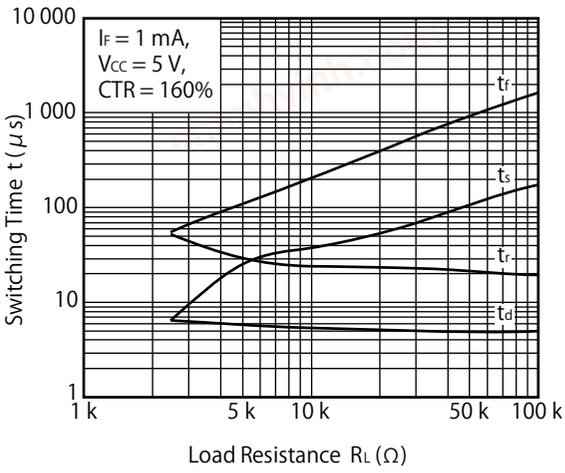

OPTICAL LEAKAGE CURRENT vs. FORWARD CURRENT

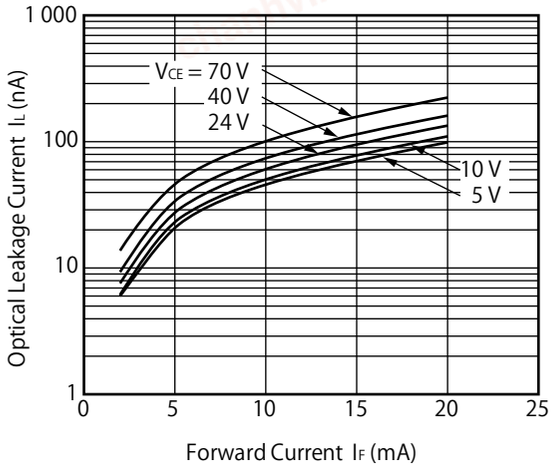

OPTICAL LEAKAGE CURRENT vs. AMBIENT TEMPERATURE

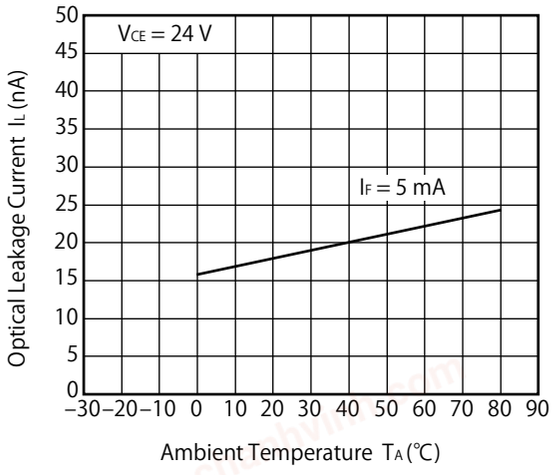

Remark The graphs indicate nominal characteristics.

chanhvinh.com

TAPING SPECIFICATIONS (UNIT: mm)

Tape Direction

PS2841-4A-F3
PS2841-4B-F3

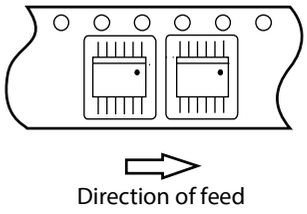

Direction of feed

Outline and Dimensions (Tape)

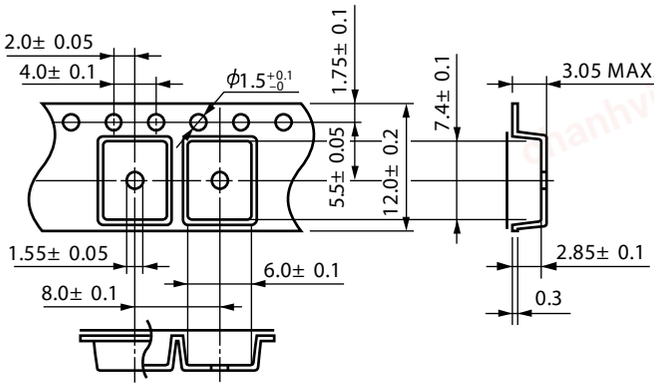

Outline and Dimensions (Reel)

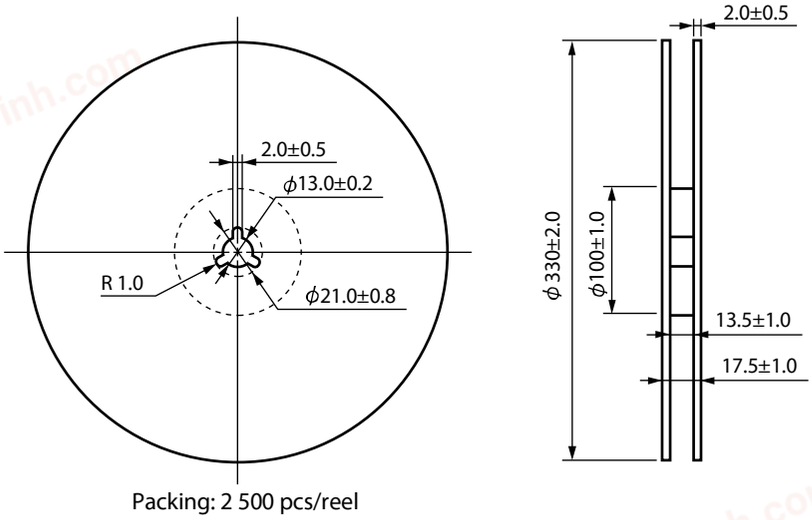

Packing: 2 500 pcs/reel

chanhvinh.com

RECOMMENDED MOUNT PAD DIMENSIONS (UNIT: mm)

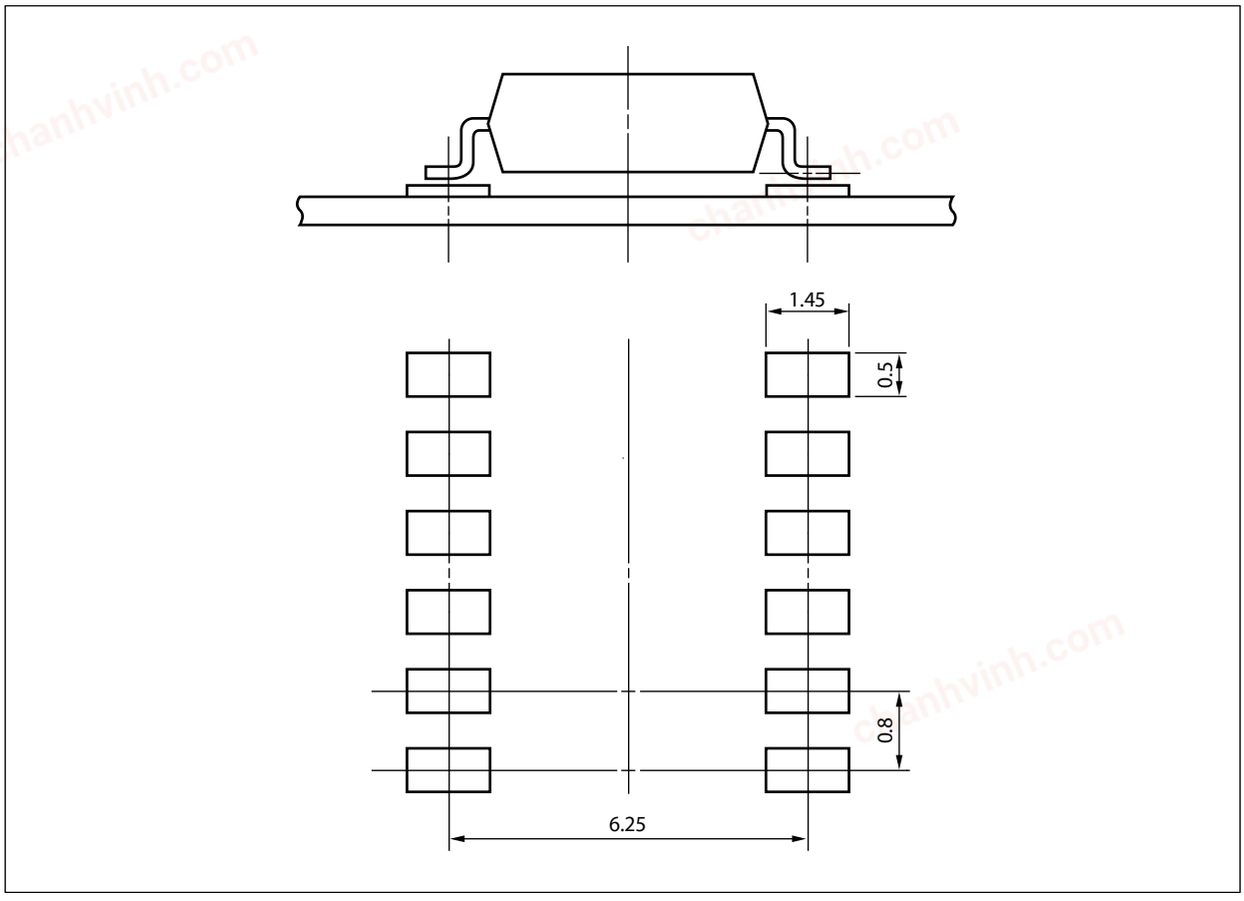

Remark All dimensions in this figure must be evaluated before use.

chanhvinh.com

NOTES ON HANDLING

1. Recommended soldering conditions

(1) Infrared reflow soldering

• Peak reflow temperature	260°C or below (package surface temperature)
• Time of peak reflow temperature	10 seconds or less
• Time of temperature higher than 220°C	60 seconds or less
• Time to preheat temperature from 120 to 180°C	120±30 s
• Number of reflows	Three
• Flux	Rosin flux containing small amount of chlorine (The flux with a maximum chlorine content of 0.2 Wt% is recommended.)

Recommended Temperature Profile of Infrared Reflow

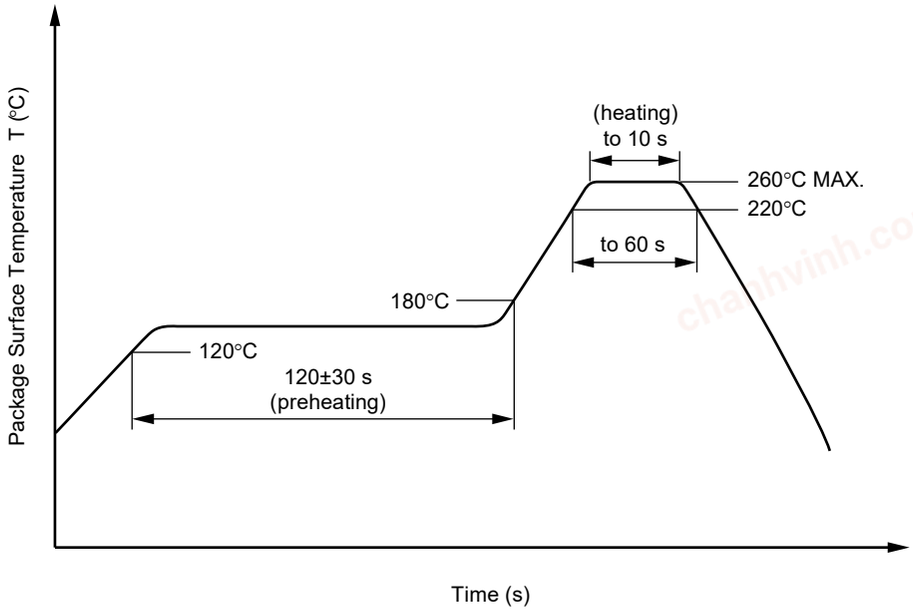

(2) Wave soldering

• Temperature	260°C or below (molten solder temperature)
• Time	10 seconds or less
• Preheating conditions	120°C or below (package surface temperature)
• Number of times	One (Allowed to be dipped in solder including plastic mold portion.)
• Flux	Rosin flux containing small amount of chlorine (The flux with a maximum chlorine content of 0.2 Wt% is recommended.)

(3) Soldering by Soldering Iron

• Peak Temperature (lead part temperature)	350°C or below
• Time (each pins)	3 seconds or less
• Flux	Rosin flux containing small amount of chlorine (The flux with a maximum chlorine content of 0.2 Wt% is recommended.)

(a) Soldering of leads should be made at the point 1.5 to 2.0 mm from the root of the lead

(b) Please be sure that the temperature of the package would not be heated over 100°C

(4) Cautions

• Flux Cleaning

Avoid cleaning with Freon based or halogen-based (chlorinated etc.) solvents.

• Do not use fixing agents or coatings containing halogen-based substances.

chanhvinh.com

2. Cautions regarding noise

Be aware that when voltage is applied suddenly between the photocoupler's input and output or between collector-emitters at startup, the output transistor may enter the on state, even if the voltage is within the absolute maximum ratings.

3. Measurement conditions of current transfer ratios (CTR), which differ according to photocoupler

Check the setting values before use, since the forward current conditions at CTR measurement differ according to product.

When using products other than at the specified forward current, the characteristics curves may differ from the standard curves due to CTR value variations or the like. Therefore, check the characteristics under the actual operating conditions and thoroughly take variations or the like into consideration before use.

USAGE CAUTIONS

1. Protect against static electricity when handling.
2. Avoid storage at a high temperature and high humidity.
3. Avoid cleaning with Freon based or halogen-based (chlorinated etc.) solvents.
4. Do not use fixing agents or coatings containing halogen-based substances.

chanhvinh.com

Caution GaAs Products	This product uses gallium arsenide (GaAs). GaAs vapor and powder are hazardous to human health if inhaled or ingested, so please observe the following points. • Follow related laws and ordinances when disposing of the product. If there are no applicable laws and/or ordinances, dispose of the product as recommended below. 1. Commission a disposal company able to (with a license to) collect, transport and dispose of materials that contain arsenic and other such industrial waste materials. 2. Exclude the product from general industrial waste and household garbage, and ensure that the product is controlled (as industrial waste subject to special control) up until final disposal. • Do not burn, destroy, cut, crush, or chemically dissolve the product. • Do not lick the product or in any way allow it to enter the mouth.

All trademarks and registered trademarks are the property of their respective owners.

chanhvinh.com

Notice

1. Descriptions of circuits, software and other related information in this document are provided only to illustrate the operation of semiconductor products and application examples. You are fully responsible for the incorporation or any other use of the circuits, software, and information in the design of your product or system. Renesas Electronics disclaims any and all liability for any losses and damages incurred by you or third parties arising from the use of these circuits, software, or information.
2. Renesas Electronics hereby expressly disclaims any warranties against and liability for infringement or any other claims involving patents, copyrights, or other intellectual property rights of third parties, by or arising from the use of Renesas Electronics products or technical information described in this document, including but not limited to, the product data, drawings, charts, programs, algorithms, and application examples.
3. No license, express, implied or otherwise, is granted hereby under any patents, copyrights or other intellectual property rights of Renesas Electronics or others.
4. You shall not alter, modify, copy, or reverse engineer any Renesas Electronics product, whether in whole or in part. Renesas Electronics disclaims any and all liability for any losses or damages incurred by you or third parties arising from such alteration, modification, copying or reverse engineering.
5. Renesas Electronics products are classified according to the following two quality grades: “Standard” and “High Quality”. The intended applications for each Renesas Electronics product depends on the product’s quality grade, as indicated below.

   "Standard": Computers; office equipment; communications equipment; test and measurement equipment; audio and visual equipment; home electronic appliances; machine tools; personal electronic equipment; industrial robots; etc.

   "High Quality": Transportation equipment (automobiles, trains, ships, etc.); traffic control (traffic lights); large-scale communication equipment; key financial terminal systems; safety control equipment; etc.

   Unless expressly designated as a high reliability product or a product for harsh environments in a Renesas Electronics data sheet or other Renesas Electronics document, Renesas Electronics products are not intended or authorized for use in products or systems that may pose a direct threat to human life or bodily injury (artificial life support devices or systems; surgical implantations; etc.), or may cause serious property damage (space system; undersea repeaters; nuclear power control systems; aircraft control systems; key plant systems; military equipment; etc.). Renesas Electronics disclaims any and all liability for any damages or losses incurred by you or any third parties arising from the use of any Renesas Electronics product that is inconsistent with any Renesas Electronics data sheet, user’s manual or other Renesas Electronics document.
6. When using Renesas Electronics products, refer to the latest product information (data sheets, user’s manuals, application notes, “General Notes for Handling and Using Semiconductor Devices” in the reliability handbook, etc.), and ensure that usage conditions are within the ranges specified by Renesas Electronics with respect to maximum ratings, operating power supply voltage range, heat dissipation characteristics, installation, etc. Renesas Electronics disclaims any and all liability for any malfunctions, failure or accident arising out of the use of Renesas Electronics products outside of such specified ranges.
7. Although Renesas Electronics endeavors to improve the quality and reliability of Renesas Electronics products, semiconductor products have specific characteristics, such as the occurrence of failure at a certain rate and malfunctions under certain use conditions. Unless designated as a high reliability product or a product for harsh environments in a Renesas Electronics data sheet or other Renesas Electronics document, Renesas Electronics products are not subject to radiation resistance design. You are responsible for implementing safety measures to guard against the possibility of bodily injury, injury or damage caused by fire, and/or danger to the public in the event of a failure or malfunction of Renesas Electronics products, such as safety design for hardware and software, including but not limited to redundancy, fire control and malfunction prevention, appropriate treatment for aging degradation or any other appropriate measures. Because the evaluation of microcomputer software alone is very difficult and impractical, you are responsible for evaluating the safety of the final products or systems manufactured by you.
8. Please contact a Renesas Electronics sales office for details as to environmental matters such as the environmental compatibility of each Renesas Electronics product. You are responsible for carefully and sufficiently investigating applicable laws and regulations that regulate the inclusion or use of controlled substances, including without limitation, the EU RoHS Directive, and using Renesas Electronics products in compliance with all these applicable laws and regulations. Renesas Electronics disclaims any and all liability for damages or losses occurring as a result of your noncompliance with applicable laws and regulations.
9. Renesas Electronics products and technologies shall not be used for or incorporated into any products or systems whose manufacture, use, or sale is prohibited under any applicable domestic or foreign laws or regulations. You shall comply with any applicable export control laws and regulations promulgated and administered by the governments of any countries asserting jurisdiction over the parties or transactions.
10. It is the responsibility of the buyer or distributor of Renesas Electronics products, or any other party who distributes, disposes of, or otherwise sells or transfers the product to a third party, to notify such third party in advance of the contents and conditions set forth in this document.
11. This document shall not be reprinted, reproduced or duplicated in any form, in whole or in part, without prior written consent of Renesas Electronics.
12. Please contact a Renesas Electronics sales office if you have any questions regarding the information contained in this document or Renesas Electronics products.

(Note 1) “Renesas Electronics” as used in this document means Renesas Electronics Corporation and also includes its directly or indirectly controlled subsidiaries.

(Note 2) “Renesas Electronics product(s)” means any product developed or manufactured by or for Renesas Electronics.

(Rev.4.0-1 November 2017)

RENESAS

SALES OFFICES

Renesas Electronics Corporation

http://www.renesas.com

Refer to "http://www.renesas.com/" for the latest and detailed information.

Renesas Electronics Corporation
TOYOSU FORESIA, 3-2-24 Toyosu, Koto-ku, Tokyo 135-0061, Japan

Renesas Electronics America Inc.
1001 Murphy Ranch Road, Milpitas, CA 95035, U.S.A.
Tel: +1-408-432-8888, Fax: +1-408-434-5351

Renesas Electronics Canada Limited
9251 Yonge Street, Suite 8309 Richmond Hill, Ontario Canada L4C 9T3
Tel: +1-905-237-2004

Renesas Electronics Europe GmbH
Arcadiastrasse 10, 40472 Düsseldorf, Germany
Tel: +49-211-6503-0, Fax: +49-211-6503-1327

Renesas Electronics (China) Co., Ltd.
Room 101-T01, Floor 1, Building 7, Yard No. 7, 8th Street, Shangdi, Haidian District, Beijing 100085, China
Tel: +86-10-8235-1155, Fax: +86-10-8235-7679

Renesas Electronics (Shanghai) Co., Ltd.
Unit 301, Tower A, Central Towers, 555 Langao Road, Putuo District, Shanghai 200333, China
Tel: +86-21-2226-0888, Fax: +86-21-2226-0999

Renesas Electronics Hong Kong Limited
Unit 1601-1611, 16/F., Tower 2, Grand Century Place, 193 Prince Edward Road West, Mongkok, Kowloon, Hong Kong
Tel: +852-2265-6688, Fax: +852 2886-9022

Renesas Electronics Taiwan Co., Ltd.
13F, No. 363, Fu Shing North Road, Taipei 10543, Taiwan
Tel: +886-2-8175-9600, Fax: +886 2-8175-9670

Renesas Electronics Singapore Pte. Ltd.
80 Bendemeer Road, Unit #06-02 Hyflux Innovation Centre, Singapore 339949
Tel: +65-6213-0200, Fax: +65-6213-0300

Renesas Electronics Malaysia Sdn.Bhd.
Unit No 3A-1 Level 3A Tower 8 UOA Business Park, No 1 Jalan Pengaturcara U1/51A, Seksyen U1, 40150 Shah Alam, Selangor, Malaysia
Tel: +60-3-5022-1288, Fax: +60-3-5022-1290

Renesas Electronics India Pvt. Ltd.
No.777C, 100 Feet Road, HAL 2nd Stage, Indiranagar, Bangalore 560 038, India
Tel: +91-80-67208700

Renesas Electronics Korea Co., Ltd.
17F, KAMCO Yangjae Tower, 262, Gangnam-daero, Gangnam-gu, Seoul, 06265 Korea
Tel: +82-2-558-3737, Fax: +82-2-558-5338

© 2019 Renesas Electronics Corporation. All rights reserved.

Colophon 8.0