chanhvinh.com

DATASHEET

ISL6420B

Advanced Single Synchronous Buck Pulse-Width Modulation (PWM) Controller

FN6901
Rev 1.00
Dec 4, 2009

The ISL6420B simplifies the implementation of a complete control and protection scheme for a high-performance DC/DC buck converter. It is designed to drive N-Channel MOSFETs in a synchronous rectified buck topology. The ISL6420B integrates control, output adjustment, monitoring and protection functions into a single package. Additionally, the IC features an external reference voltage tracking mode for externally referenced buck converter applications and DDR termination supplies, as well as a voltage margining mode for system testing in networking DC/DC converter applications.

The ISL6420B provides simple, single feedback loop, voltage mode control with fast transient response. The output voltage of the converter can be precisely regulated to as low as 0.6V.

The operating frequency is fully adjustable from 100kHz to 1.4MHz. High frequency operation offers cost and space savings.

The error amplifier features a 15MHz gain-bandwidth product and 6V/µs slew rate that enables high converter bandwidth for fast transient response. The PWM duty cycle ranges from 0% to 100% in transient conditions. Selecting the capacitor value from the ENSS pin to ground sets a fully adjustable PWM soft-start. Pulling the ENSS pin LOW disables the controller.

The ISL6420B monitors the output voltage and generates a PGOOD (power good) signal when soft-start sequence is complete and the output is within regulation. A built-in overvoltage protection circuit prevents the output voltage from going above typically 115% of the set point. Protection from overcurrent conditions is provided by monitoring the $r_{DS(ON)}$ of the upper MOSFET to inhibit the PWM operation appropriately. This approach simplifies the implementation and improves efficiency by eliminating the need for a current sensing resistor.

Features

- Operates From:
  - 4.5V to 5.5V Input
  - 5.5V to 28V Input
- 0.6V Internal Reference Voltage
  - ±2.0% Reference Accuracy
- Resistor-Selectable Switching Frequency
  - 100kHz to 1.4MHz
- Voltage Margining and External Reference Tracking Modes
- Output can Sink or Source Current
- Lossless, Programmable Overcurrent Protection
  - Uses Upper MOSFET's $r_{DS(ON)}$
- Programmable Soft-Start
- Drives N-Channel MOSFETs
- Simple Single-Loop Control Design
  - Voltage-Mode PWM Control
- Fast Transient Response
  - High-Bandwidth Error Amplifier
  - Full 0% to 100% Duty Cycle
- Extensive Circuit Protection Functions
  - PGOOD, Overvoltage, Overcurrent, Shutdown
- Diode Emulation during Startup for Pre-Biased Load Applications
- Offered in 20 Ld QFN and QSOP Packages
- QFN (4x4) Package
  - QFN compliant to JEDEC PUB95 MO-220 QFN -Quad Flat No Leads - Product Outline
  - QFN Near Chip Scale Package Footprint; Improves PCB Efficiency, Thinner in Profile
- Pb-Free (RoHS Compliant)

Applications

- Power Supplies for Microprocessors/ASICs
  - Embedded Controllers
  - DSP and Core Processors
  - DDR SDRAM Bus Termination
- Ethernet Routers and Switchers
- High-Power DC/DC Regulators
- Distributed DC/DC Power Architecture
- Personal Computer Peripherals
- Externally Referenced Buck Converters

chanhvinh.com

Ordering Information

PART NUMBER (Notes 2, 3)	PART MARKING	TEMP. RANGE (°C)	PACKAGE (Pb-Free)	PKG. DWG. #
ISL6420BIAZ	6420B IAZ	-40 to +85	20 Ld QSOP	M20.15
ISL6420BIAZ-TK (Note 1)	6420B IAZ	-40 to +85	20 Ld QSOP (Tape and Reel)	M20.15
ISL6420BIRZ	64 20BIRZ	-40 to +85	20 Ld 4x4 QFN	L20.4x4
ISL6420BIRZ-TK (Note 1)	64 20BIRZ	-40 to +85	20 Ld 4x4 QFN (Tape and Reel)	L20.4x4

NOTES:

1. Please refer to TB347 for details on reel specifications.
2. These Intersil Pb-free plastic packaged products employ special Pb-free material sets, molding compounds/die attach materials, and 100% matte tin plate plus anneal (e3 termination finish, which is RoHS compliant and compatible with both SnPb and Pb-free soldering operations). Intersil Pb-free products are MSL classified at Pb-free peak reflow temperatures that meet or exceed the Pb-free requirements of IPC/JEDEC J STD-020.
3. For Moisture Sensitivity Level (MSL), please see device information page for ISL6240B For more information on MSL please see techbrief TB363.

Pin Configurations

ISL6420B
(20 LD QFN)
TOP VIEW

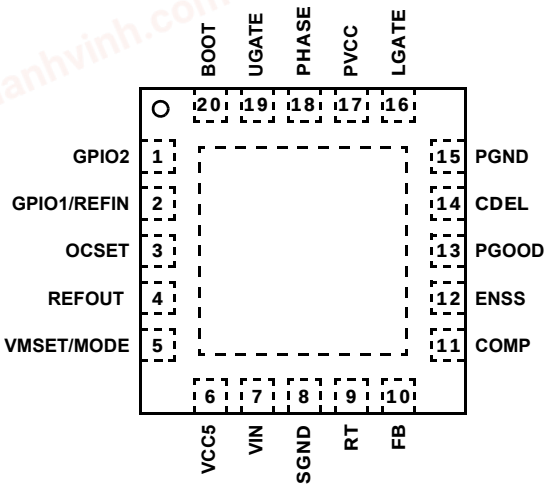

ISL6420B
(20 LD QSOP)
TOP VIEW

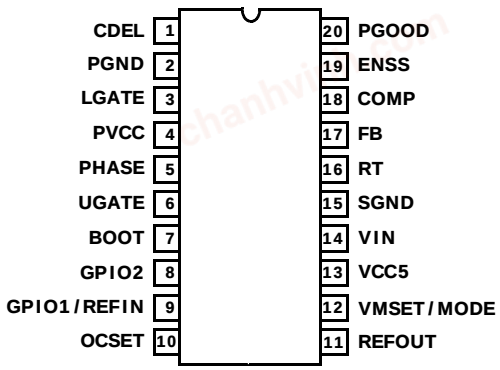

chanhvinh.com

Block Diagram

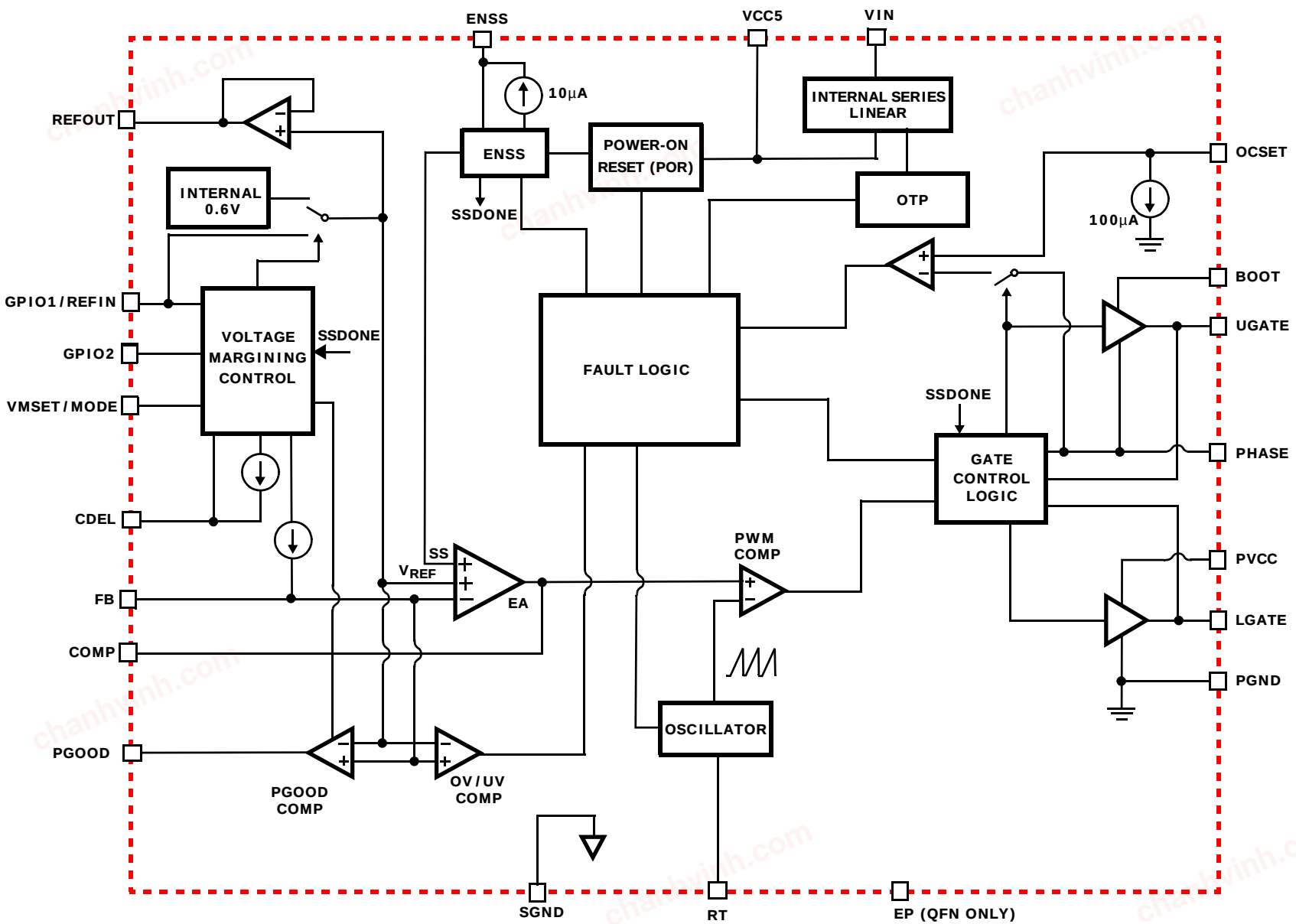

chanhvinh.com

Typical 5V Input DC/DC Application Schematic

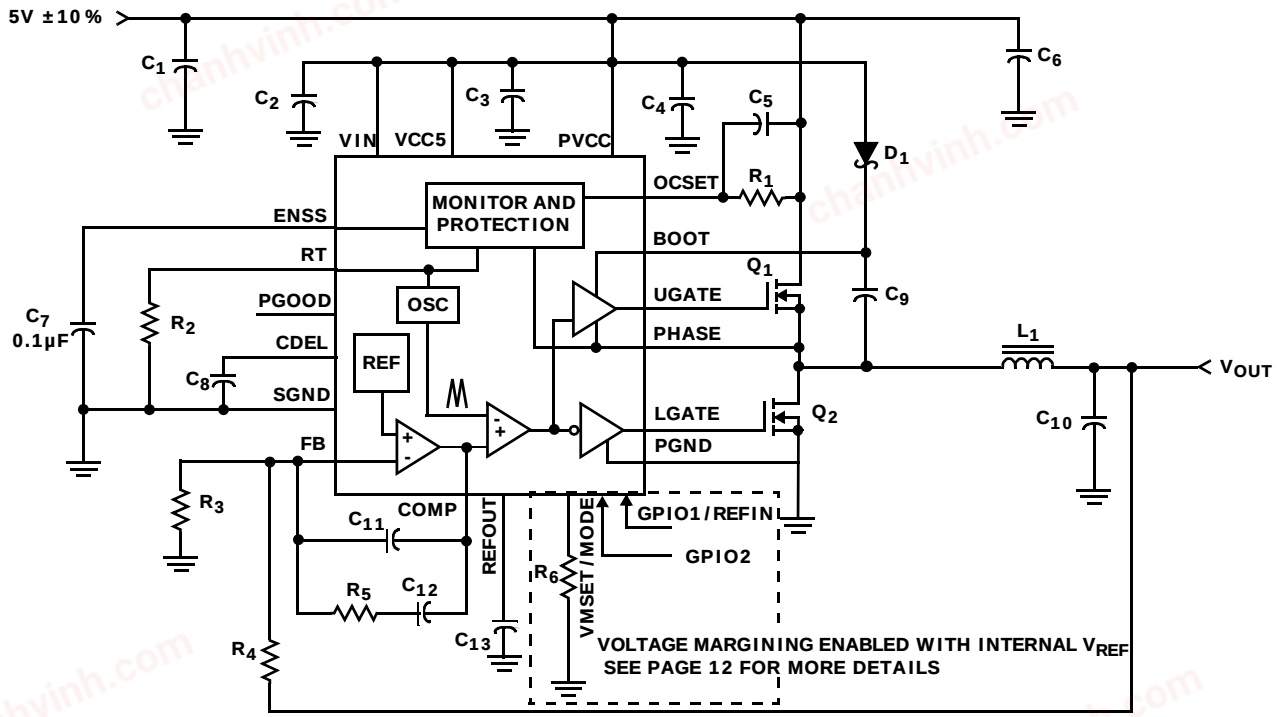

Typical 5.5V to 28V Input DC/DC Application Schematic

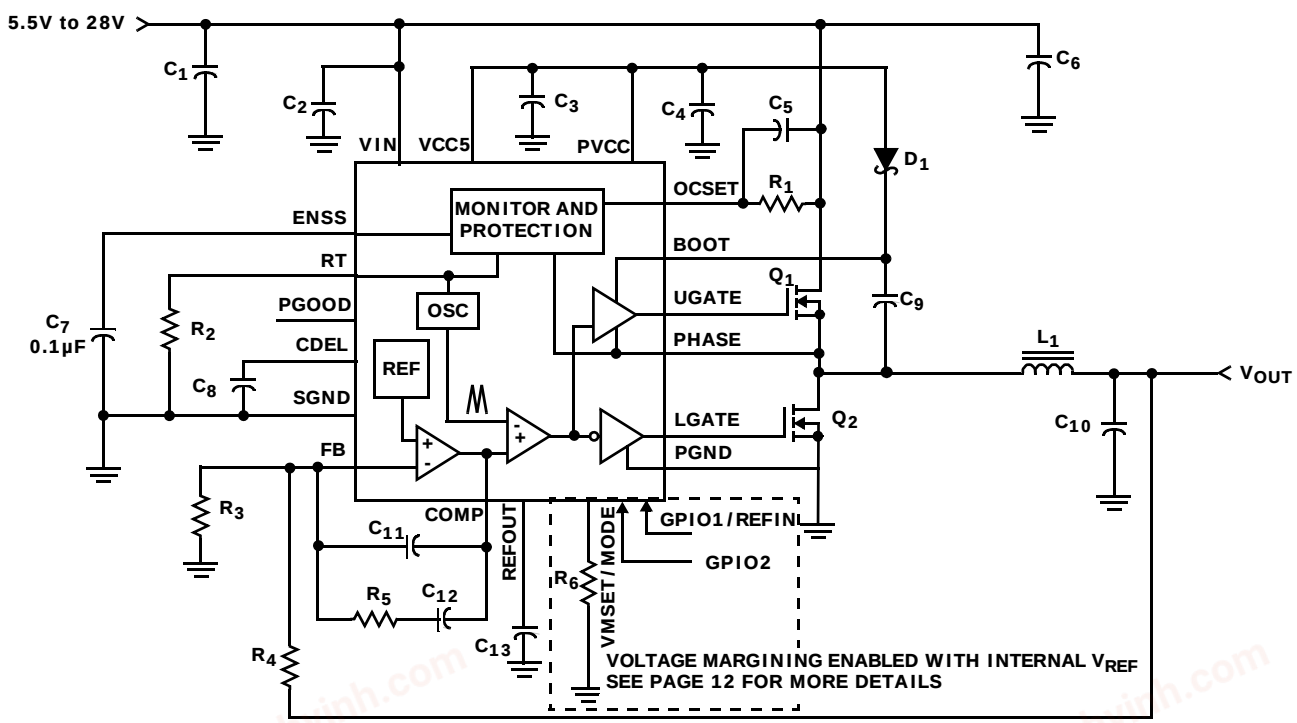

chanhvinh.com

Typical 5V Input DC/DC Application Schematic

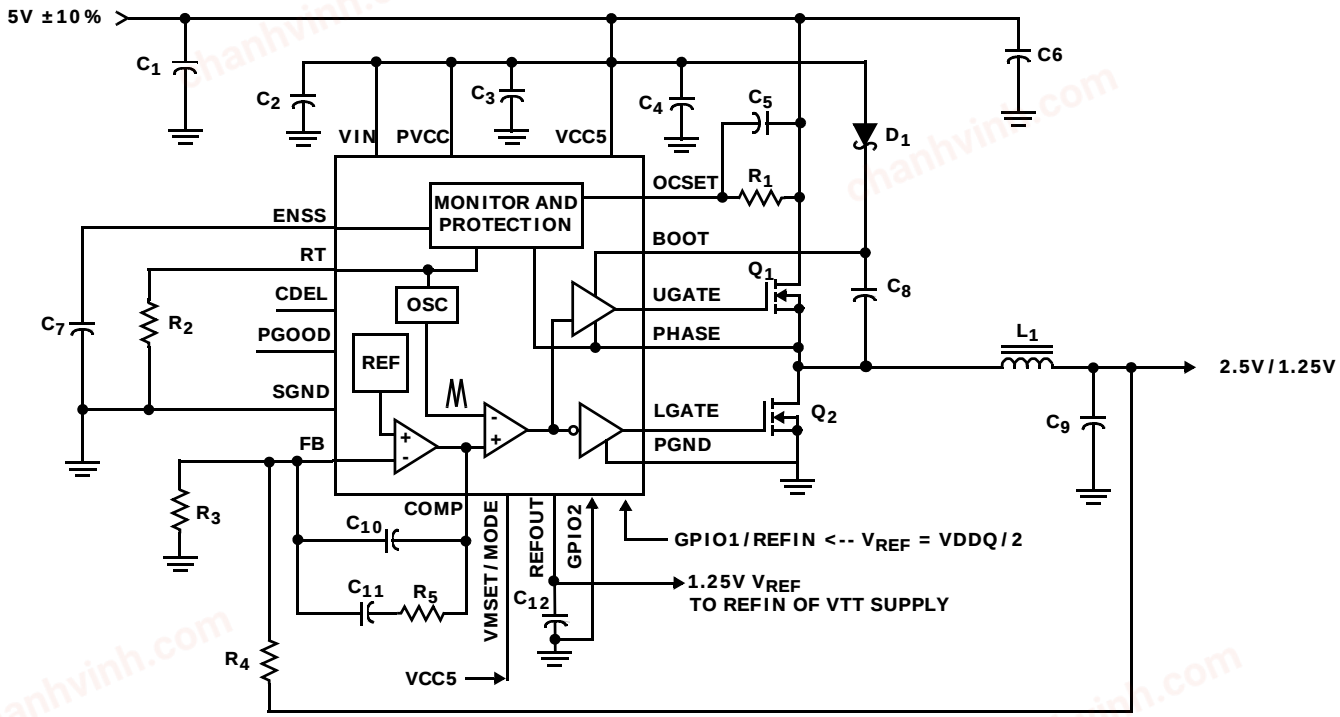

CONFIGURATION FOR DDR TERMINATION/EXTERNALLY REFERENCED TRACKING APPLICATIONS

Typical 5.5V to 28V Input DC/DC Application Schematic

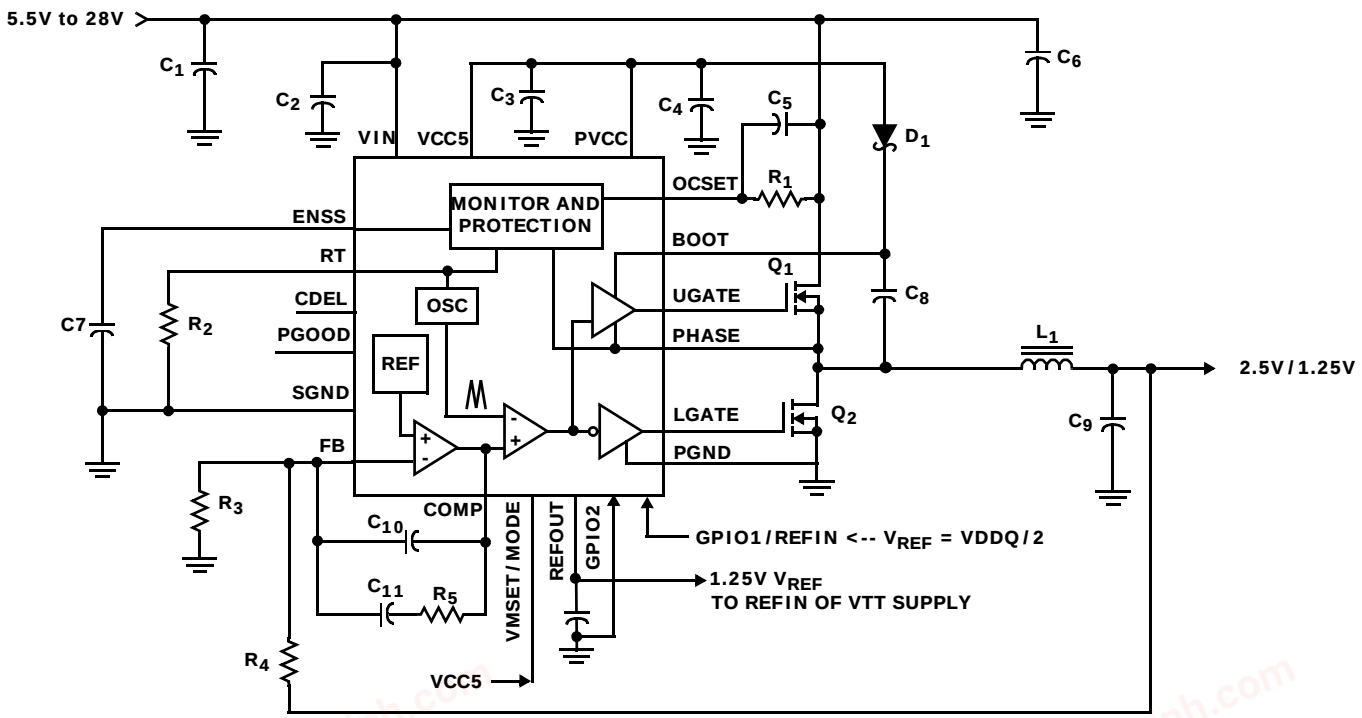

CONFIGURATION FOR DDR TERMINATION/EXTERNALLY REFERENCED TRACKING APPLICATIONS

chanhvinh.com

Typical 5V Input DC/DC Application Schematic

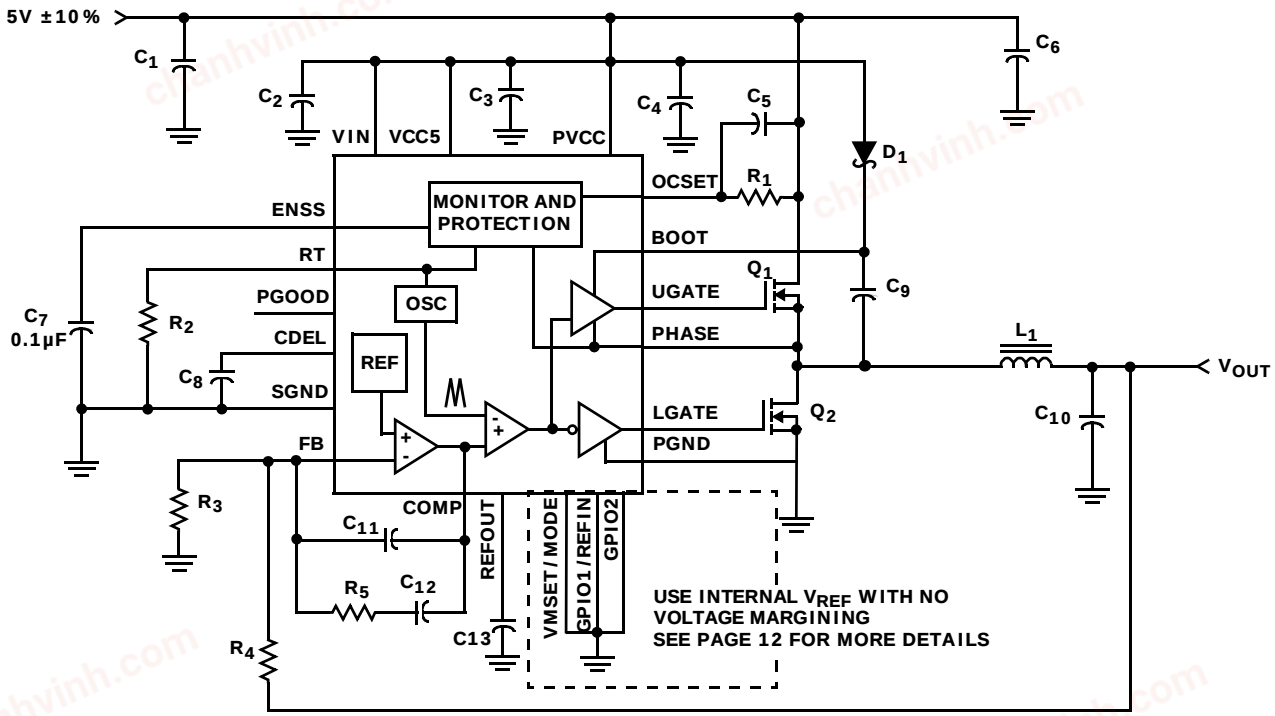

Typical 5.5V to 28V Input DC/DC Application Schematic

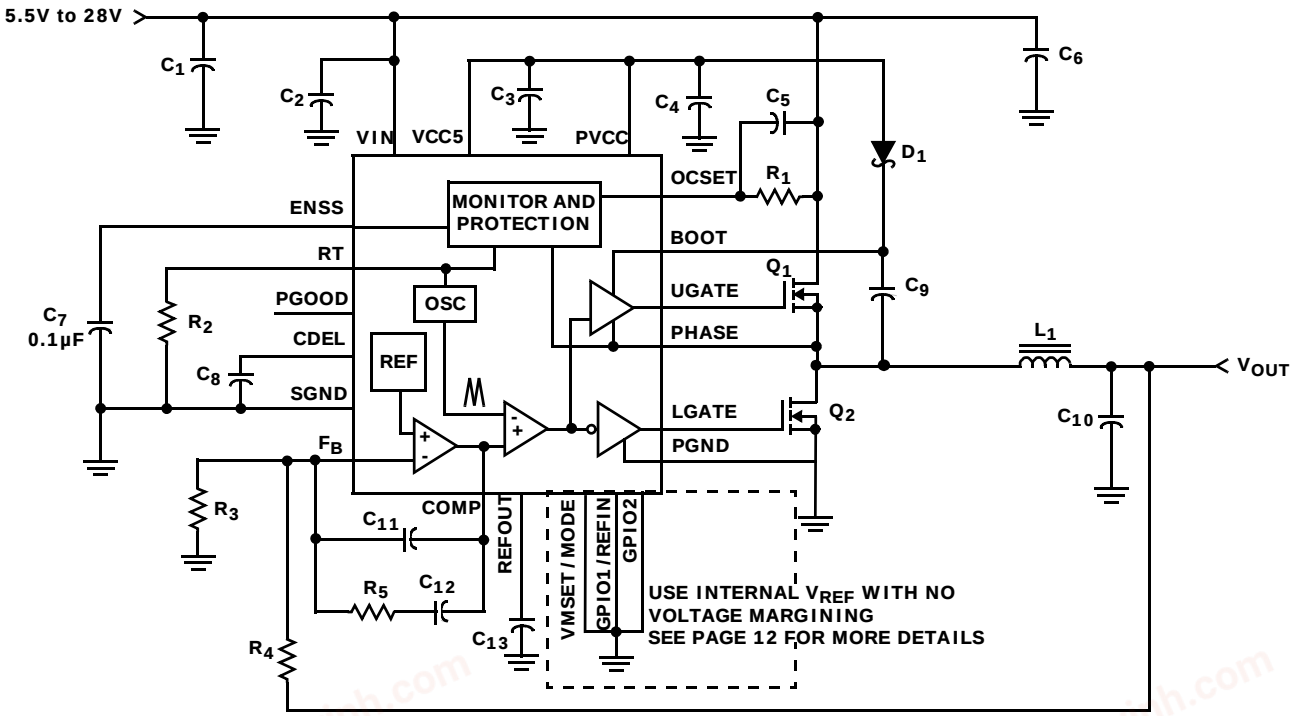

chanhvinh.com

Absolute Maximum Ratings (Note 4)

Bias Voltage, VIN . . . . . +30V
BOOT and U_{GATE} Pins . . . . . +36V

Thermal Information

Thermal Resistance (Typical)	θ_{JA} (°C/W)	θ_{JC} (°C/W)
QFN Package (Notes 5, 6)	47	8.5
QSOP Package (Note 5)	90	NA

Maximum Junction Temperature (Plastic Package) . . +150°C
Maximum Storage Temperature Range . . . -65°C to +150°C
Ambient Temperature Range . -40°C to +85°C (for "I" suffix)
Junction Temperature Range . . . . . -40°C to +125°C
Pb-Free Reflow Profile . . . . . .see link below
http://www.intersil.com/pbfree/Pb-FreeReflow.asp

CAUTION: Do not operate at or near the maximum ratings listed for extended periods of time. Exposure to such conditions may adversely impact product reliability and result in failures not covered by warranty.

NOTES:

4. All voltages are with respect to GND.
5. θ_{JA} is measured in free air with the component mounted on a high effective thermal conductivity test board with "direct attach" features. See Tech Brief TB379.
6. For θ_{JC}, the "case temp" location is the center of the exposed metal pad on the package underside.

Electrical Specifications

Operating Conditions: VIN = 12V, PVCC shorted with VCC5, T_A = +25°C. **Boldface limits apply over the operating temperature range, -40°C to +85°C.**

PARAMETER	SYMBOL	TEST CONDITIONS	MIN (Note 12)	TYP	MAX (Note 12)	UNITS
VIN SUPPLY						
Input Voltage Range			5.6	12	28	V
VIN SUPPLY CURRENT						
Shutdown Current (Note 7)		ENSS = GND	-	1.4	-	mA
Operating Current (Notes 7, 8)			-	2.0	3.0	mA
VCC5 SUPPLY (Notes 8, 9)						
Input Voltage Range		VIN = VCC5 for 5V configuration	4.5	5.0	5.5	V
Output Voltage		VIN = 5.6V to 28V, I_L = 3mA to 50mA	4.5	5.0	5.5	V
Maximum Output Current		VIN = 12V	50	-	-	mA
POWER-ON RESET						
Rising VCC5 Threshold		VIN connected to VCC5, 5V input operation	4.310	4.400	4.475	V
Falling VCC5 Threshold			4.090	4.100	4.250	V
UVLO Threshold Hysteresis			0.16	-	-	V
PWM CONVERTERS						
Maximum Duty Cycle		f_{SW} = 300kHz	90	96	-	%
Minimum Duty Cycle		f_{SW} = 300kHz	-	-	0	%
FB Pin Bias Current			-	80	-	nA
Undervoltage Protection	V_{UV}	Fraction of the set point; ~3µs noise filter	75	-	85	%
Overvoltage Protection	V_{OVP}	Fraction of the set point; ~1µs noise filter	112	-	120	%
OSCILLATOR						
Free Running Frequency		RT = VCC5, T_A = -40°C to +85°C	**270**	300	**330**	kHz
Total Variation		T_A = -40°C to +85°C, with frequency set by external resistor at RT	**-**	±10%	**-**	%
Frequency Range (Set by RT)		VIN = 12V	100	-	1400	kHz

chanhvinh.com

Electrical Specifications Operating Conditions: VIN = 12V, PVCC shorted with VCC5, T_A = +25°C. **Boldface limits apply over the operating temperature range, -40°C to +85°C. (Continued)**

PARAMETER	SYMBOL	TEST CONDITIONS	MIN (Note 12)	TYP	MAX (Note 12)	UNITS
Ramp Amplitude (Note 10)	ΔV_{OSC}		-	1.25	-	V_{P-P}
REFERENCE AND SOFT-START/ENABLE						
Internal Reference Voltage	V_{REF}		0.594	-	0.606	V
Soft-Start Current	I_{SS}		-	10	-	µA
Soft-Start Threshold	V_{SOFT}		1.0	-	-	V
Enable Low (Converter Disabled)			-	-	1.0	V
PWM CONTROLLER GATE DRIVERS						
Gate Drive Peak Current			-	0.7	-	A
Rise Time		Co = 1000pF	-	20	-	ns
Fall Time		Co = 1000pF	-	20	-	ns
Dead Time Between Drivers			-	20	-	ns
ERROR AMPLIFIER						
DC Gain (Note 10)			-	88	-	dB
Gain-Bandwidth Product (Note 10)	GBW		-	15	-	MHz
Slew Rate (Note 10)	SR		-	6	-	V/µs
COMP Souce/Sink Current (Note 10)				±0.4		mA
OVERCURRENT PROTECTION						
OCSET Current Source	I_{OCSET}	V_{OCSET} = 4.5V	80	100	120	µA
POWER-GOOD AND CONTROL FUNCTIONS						
Power-Good Lower Threshold	V_{PG-}	Fraction of the set point; ~3µs noise filter	-14	-10	-8	%
Power-Good Higher Threshold	V_{PG+}	Fraction of the set point; ~3µs noise filter	9	-	16	%
PGOOD Leakage Current	I_{PGLKG}	V_{PULLUP} = 5.0V (Note 11)	-	-	1	µA
PGOOD Voltage Low		I_{PGOOD} = 4mA	-	-	0.5	V
PGOOD Delay		CDEL = 0.1µF	-	125	-	ms
CDEL Current for PGOOD		CDEL threshold = 2.5V	-	2	-	µA
CDEL Threshold			-	2.5	-	V
EXTERNAL REFERENCE						
Min External Reference Input at GPIO1/REFIN		$V_{MSET/MODE}$ = H, C_{REFOUT} = 2.2µF	-	0.600	-	V
Max External Reference Input at GPIO1/REFIN		$V_{MSET/MODE}$ = H, C_{REFOUT} = 2.2µF	-	-	1.250	V
REFERENCE BUFFER						
Buffered Output Voltage - Internal Reference	V_{REFOUT}	I_{REFOUT} = 1mA, $V_{MSET/MODE}$ = High, C_{REFOUT} = 2.2µF, T_A = -40°C to +85°C	**0.583**	0.595	**0.607**	V
Buffered Output Voltage - Internal Reference	V_{REFOUT}	I_{REFOUT} = 20mA, $V_{MSET/MODE}$ = High, C_{REFOUT} = 2.2µF, T_A = -40°C to +85°C	**0.575**	0.587	**0.599**	V

chanhvinh.com

Electrical Specifications Operating Conditions: VIN = 12V, PVCC shorted with VCC5, T_A = +25°C. **Boldface limits apply over the operating temperature range, -40°C to +85°C. (Continued)**

PARAMETER	SYMBOL	TEST CONDITIONS	MIN (Note 12)	TYP	MAX (Note 12)	UNITS
Buffered Output Voltage - External Reference	V_{REFOUT}	V_{REFIN} = 1.25V, I_{REFOUT} = 1mA, VMSET2/MODE = High, C_{REFOUT} = 2.2µF	1.227	1.246	1.265	V
Buffered Output Voltage - External Reference	V_{REFOUT}	V_{REFIN} = 1.25V, I_{REFOUT} = 20mA, VMSET2/MODE = High, C_{REFOUT} = 2.2µF	1.219	1.238	1.257	V
Current Drive Capability		C_{REFOUT} = 2.2µF	20	-	-	mA
VOLTAGE MARGINING						
Voltage Margining Range (Note 10)			-10	-	+10	%
CDEL Current for Voltage Margining			-	100	-	µA
Slew Time		CDEL = 0.1µF, VMSET = 330kΩ	-	2.5	-	ms
ISET1 on FB Pin		VMSET = 330k, GPIO1 = L GPIO2 = H	-	7.48	-	µA
ISET2 on FB Pin		VMSET = 330k, GPIO1 = H GPIO2 = L	-	7.48	-	µA
THERMAL SHUTDOWN						
Shutdown Temperature (Note 10)			-	150	-	°C
Thermal Shutdown Hysteresis (Note 10)			-	20	-	°C

NOTES:

7. The operating supply current and shutdown current specifications for 5V input are the same as VIN supply current specifications, i.e., 5.6V to 28V input conditions. These should also be tested with part configured for 5V input configuration, i.e., VIN = VCC5 = PVCC = 5V.
8. This is the V_{CC} current consumed when the device is active but not switching. Does not include gate drive current.
9. When the input voltage is 5.6V to 28V at VIN pin, the VCC5 pin provides a 5V output capable of 50mA (max) total from the internal LDO. When the input voltage is 5V, VCC5 pin will be used as a 5V input, the internal LDO regulator is disabled and the VIN must be connected to the VCC5. In both cases the PVCC pin should always be connected to VCC5 pin (refer to “Pin Descriptions” on page 11 for more details).
10. Limits established by characterization and are not production tested.
11. It is recommended to use VCC5 as the pull-up source.
12. Parameters with MIN and/or MAX limits are 100% tested at +25°C, unless otherwise specified. Temperature limits established by characterization and are not production tested.

chanhvinh.com

Typical Performance Curves

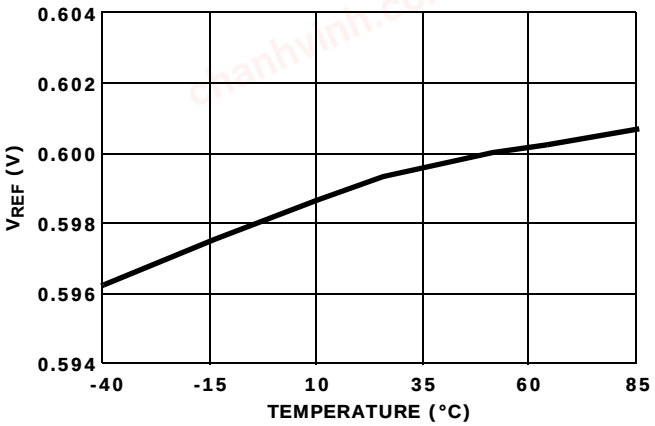

FIGURE 1. V_{REF} vs TEMPERATURE

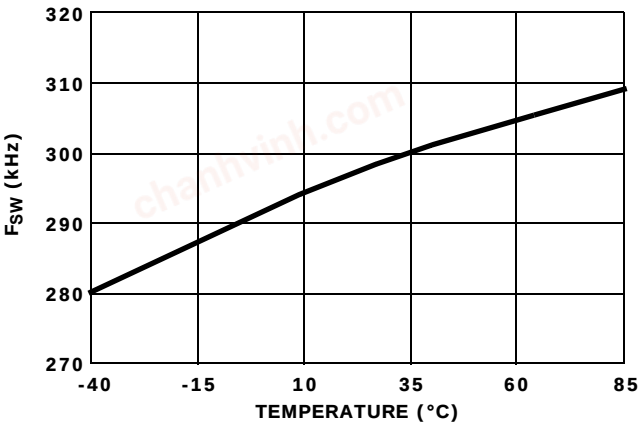

FIGURE 2. V_{SW} vs TEMPERATURE

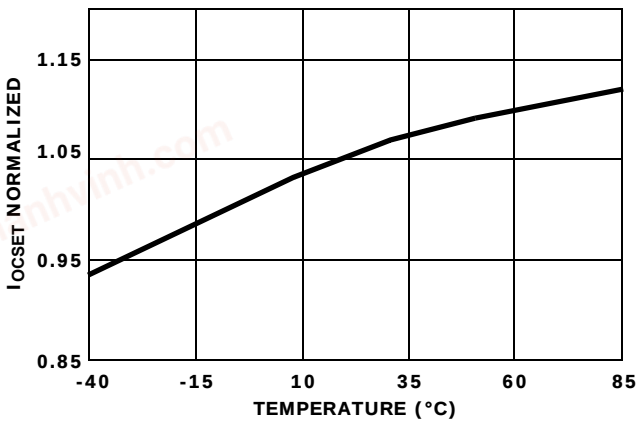

FIGURE 3. I_{OCSET} vs TEMPERATURE

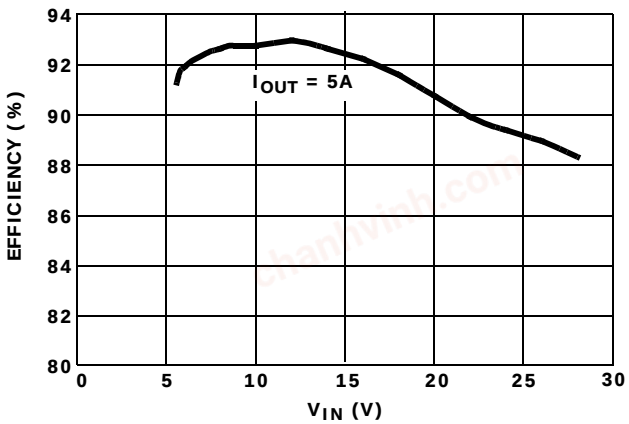

FIGURE 4. EFFICIENCY vs V_{IN}

+25°C, VIN = 28V, I_{IN} = 1.367, I_{OUT} = 10A

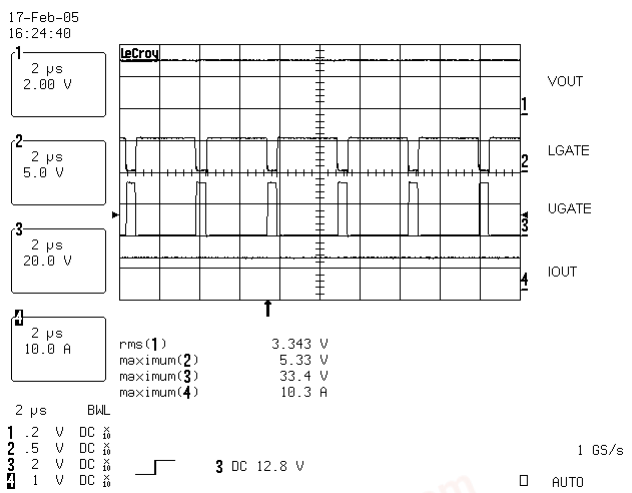

FIGURE 5.

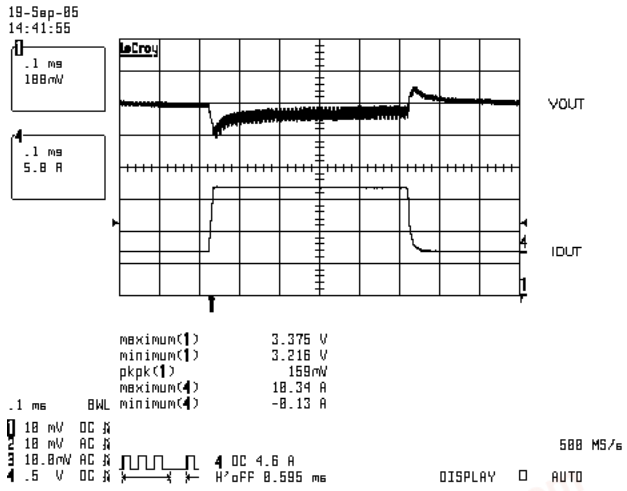

FIGURE 6.

chanhvinh.com

Typical Performance Curves (Continued)

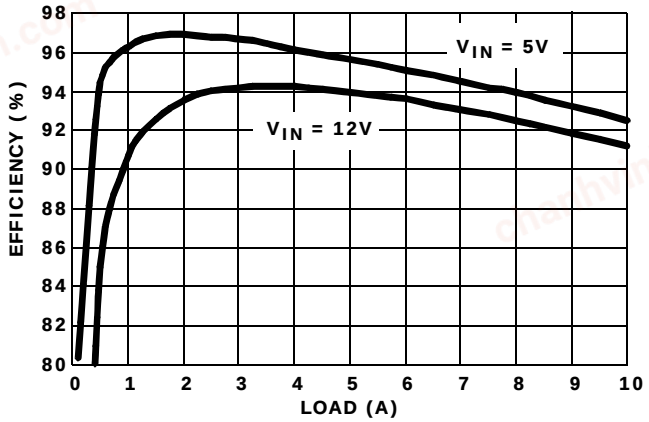

FIGURE 7. EFFICIENCY vs LOAD CURRENT (V_{OUT} = 3.3V)

Pin Descriptions

VIN

This pin powers the controller and must be decoupled to ground using a ceramic capacitor as close as possible to the VIN pin.

TABLE 1. INPUT SUPPLY CONFIGURATION

INPUT	PIN CONFIGURATION
5.5V to 28V	Connect the input to the VIN pin. The VCC5 pin will provide a 5V output from the internal LDO. Connect PVCC to VCC5.
5V ±10%	Connect the input to the VCC5 pin. Connect the PVCC and VIN pins to VCC5.

SGND

This pin provides the signal ground for the IC. Tie this pin to the ground plane through the lowest impedance connection.

LGATE

This pin provides the PWM-controlled gate drive for the lower MOSFET.

PHASE

This pin is the junction point of the output filter inductor, the upper MOSFET source and the lower MOSFET drain. This pin is used to monitor the voltage drop across the upper MOSFET for overcurrent protection. This pin also provides a return path for the upper gate drive.

UGATE

This pin provides the PWM-controlled gate drive for the upper MOSFET.

BOOT

This pin powers the upper MOSFET driver. Connect this pin to the junction of the bootstrap capacitor and the cathode of the bootstrap diode. The anode of the bootstrap diode is connected to the PVCC pin.

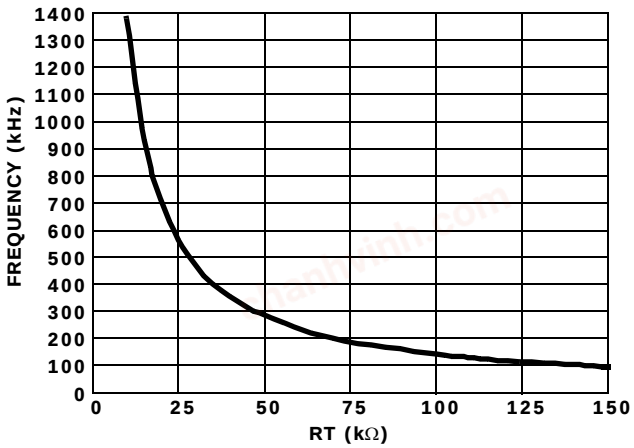

FIGURE 8. OSCILLATOR FREQUENCY vs RT

FB

This pin is connected to the feedback resistor divider and provides the voltage feedback signal for the controller. This pin sets the output voltage of the converter.

COMP

This pin is the error amplifier output pin. It is used as the compensation point for the PWM error amplifier.

PGOOD

This pin provides a power good status. It is an open collector output used to indicate the status of the output voltage.

RT

This is the oscillator frequency selection pin. Connecting this pin directly to VCC5 will select the oscillator free running frequency of 300kHz. By placing a resistor from this pin to GND, the oscillator frequency can be programmed from 100kHz to 1.4MHz. Figure 8 shows the oscillator frequency vs. the RT resistance.

chanhvinh.com

CDEL

The PGOOD signal can be delayed by a time proportional to a CDEL current of 2µA and the value of the capacitor connected between this pin and ground. A 0.1µF will typically provide 125ms delay. When in the Voltage Margining mode, the CDEL current is 100µA typical and provides the delay for the output voltage slew rate, 2.5ms typical for the 0.1µF capacitor.

PGND

This pin provides the power ground for the IC. Tie this pin to the ground plane through the lowest impedance connection.

PVCC

This pin is the power connection for the gate drivers. Connect this pin to the VCC5 pin.

VCC5

This pin is the output of the internal 5V LDO. Connect a minimum of 4.7µF ceramic decoupling capacitor as close to the IC as possible at this pin. Refer to Table 1.

ENSS

This pin provides enable/disable function and soft-start for the PWM output. The output drivers are turned off when this pin is held below 1V.

OCSET

Connect a resistor (R_{OCSET}) and a capacitor from this pin to the drain of the upper MOSFET. R_{OCSET}, an internal 100µA current source (I_{OCSET}), and the upper MOSFET on resistance $r_{DS(ON)}$ set the converter overcurrent (OC) trip point.

GPIO1/REFIN

This is a dual function pin. If VMSET/MODE is not connected to VCC5 then this pin serves as GPIO1. Refer to Table 3 for GPIO commands interpretation.

To use GPIO1/REFIN as input reference, connect VMSET/MODE to VCC5 and GPIO2 to SGND. Connect the desired reference voltage to the GPIO1/REFIN pin in the range of 0.6V to 1.25V.

Connect GPIO1/REFIN and VMSET/MODE pins to VCC5, GPIO2 to SGND, the IC operates with the internal reference and no voltage margining function.

REFOUT

It provides buffered reference output for REFIN. Connect 2.2µF decoupling capacitor to this pin.

VMSET/MODE

This pin is a dual function pin. Tie this pin to VCC5 to disable voltage margining. When not tied to VCC5, this pin serves as VMSET. Connect a resistor from this pin to ground to set delta for voltage margining.

If voltage margining and external reference tracking mode are not needed, VNSET/MODE, GPIO1/REFIN and GPIO2 all together can be tied directly to ground.

GPIO2

This is general purpose IO pin for voltage margining. Refer to Table 3.

Exposed Thermal Pad

This pad is electrically isolated. Connect this pad to the signal ground plane using at least five vias for a robust thermal conduction path.

TABLE 2. VOLTAGE MARGINING/DDR OR TRACKING SUPPLY PIN CONFIGURATION

FUNCTION/MODES	PIN CONFIGURATIONS			
	VMSET/MODE	REFOUT	GPIO1/REFIN	GPIO2
Enable Voltage Margining	Pin Connected to GND with resistor. It is used as VMSET.	Connect a 2.2µF capacitor for bypass of external reference.	Serves as a general purpose I/O. Refer to Table 3.	Serves as a general purpose I/O. Refer to Table 3.
No Voltage Margining. Normal operation with internal reference. Buffered V_{REFOUT} = 0.6V.	H	Connect a 2.2µF capacitor to GND.	H (Note 14)	L
No Voltage Margining. External reference. Buffered V_{REFOUT} = V_{REFIN}	H	Connect a 2.2µF capacitor to GND.	Connect to an external reference voltage source (0.6V to 1.25V)	L

NOTES:

13. The GPIO1/REFIN and GPIO2 pins cannot be left floating.

14. Ensure that GPIO1/REFIN is tied high prior to the logic change at VMSET/MODE.

chanhvinh.com

TABLE 3. VOLTAGE MARGINING CONTROLLED BY GPIO1 AND GPIO2

GPIO1	GPIO2	VOUT
L	L	No Change
L	H	+ΔVOUT
H	L	-ΔVOUT
H	H	Ignored

Functional Description

Initialization

The ISL6420B automatically initializes upon receipt of power. The Power-On Reset (POR) function monitors the internal bias voltage generated from LDO output (VCC5) and the ENSS pin. The POR function initiates the soft-start operation after the VCC5 exceeds the POR threshold. The POR function inhibits operation with the chip disabled (ENSS pin <1V).

The device can operate from an input supply voltage of 5.5V to 28V connected directly to the VIN pin using the internal 5V linear regulator to bias the chip and supply the gate drivers. For 5V ±10% applications, connect VIN to VCC5 to bypass the linear regulator.

Soft-Start/Enable

The ISL6420B soft-start function uses an internal current source and an external capacitor to reduce stresses and surge current during start-up.

When the output of the internal linear regulator reaches the POR threshold, the POR function initiates the soft-start sequence. An internal 10µA current source charges an external capacitor on the ENSS pin linearly from 0V to 3.3V.

When the ENSS pin voltage reaches 1V typically, the internal 0.6V reference begins to charge following the dv/dt of the ENSS voltage. As the soft-start pin charges from 1V to 1.6V, the reference voltage charges from 0V to 0.6V. Figure 9 shows a typical soft-start sequence.

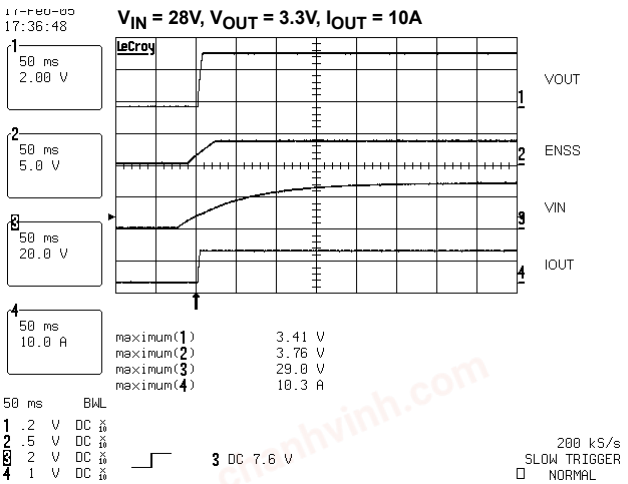

FIGURE 9. TYPICAL SOFT-START WAVEFORM

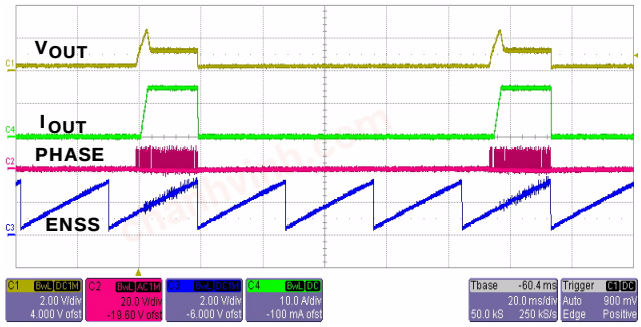

FIGURE 10. TYPICAL OVERCURRENT HICCUP MODE

Overcurrent Protection

The overcurrent function protects the converter from a shorted output by using the upper MOSFET's ON-resistance, $r_{DS(ON)}$ to monitor the current. This method enhances the converter's efficiency and reduces cost by eliminating a current sensing resistor.

The overcurrent function cycles the soft-start function in a hiccup mode to provide fault protection. A resistor connected to the drain of the upper FET and the OCSET pin programs the overcurrent trip level. The PHASE node voltage will be compared against the voltage on the OCSET pin, while the upper FET is on. A current (100µA typically) is pulled from the OCSET pin to establish the OCSET voltage. If PHASE is lower than OCSET while the upper FET is on then an overcurrent condition is detected for that clock cycle. The upper gate pulse is immediately terminated, and a counter is incremented. If an overcurrent condition is detected for 8 consecutive clock cycles, and the circuit is not in soft-start, the ISL6420B enters into the soft-start hiccup mode. During hiccup, the external capacitor on the ENSS pin is discharged. After the capacitor is discharged, it is released and a soft-start cycle is initiated. There are three dummy soft-start delay cycles to allow the MOSFETs to cool down, to keep the average power dissipation in hiccup mode at an acceptable level. At the fourth soft-start cycle, the output starts a normal soft-start cycle, and the output tries to ramp.

During soft-start, pulse termination current limiting is enabled, but the 8-cycle hiccup counter is held in reset until soft-start is completed. Figure 10 shows the overcurrent hiccup mode.

The overcurrent function will trip at a peak inductor current (I_{OC}) determined from Equation 1, where I_{OCSET} is the internal OCSET current source.

$$I_{OC} = \frac{I_{OCSET} \bullet R_{OCSET}}{r_{DS(ON)}} \quad \text{(EQ. 1)}$$

The OC trip point varies mainly due to the upper MOSFETs $r_{DS(ON)}$ variations. To avoid overcurrent tripping in the normal operating load range, find the R_{OCSET} resistor from Equation 1 with:

chanhvinh.com

1. The maximum $r_{DS(ON)}$ at the highest junction temperature.
2. Determine I_{OC} for $I_{OC} > I_{OUT(MAX)} + (\Delta I)/2$, where ΔI is the output inductor ripple current.

A small ceramic capacitor should be placed in parallel with R_{OCSET} to smooth the voltage across R_{OCSET} in the presence of switching noise on the input voltage.

Voltage Margining

The ISL6420B has a voltage margining mode that can be used for system testing. The voltage margining percentage is resistor selectable up to ±10%. The voltage margining mode can be enabled by connecting a margining set resistor from VMSET pin to ground and using the control pins GPIO1/2 to toggle between positive and negative margining (Refer to Table 3). With voltage margining enabled, the VMSET resistor to ground will set a current, which is switched to the FB pin. The current will be equal to 2.468V divided by the value of the external resistor tied to the VMSET pin. Use a resistor in the range of 150kΩ to 400kΩ for VMSET resistor.

$$I_{VM} = \frac{2.468V}{R_{VMSET}} \quad \text{(EQ. 2)}$$

$$\Delta V_{VM} = 2.468V \frac{R_{FB}}{R_{VMSET}} \quad \text{(EQ. 3)}$$

The power supply output increases when GPIO2 is HIGH and decreases when GPIO1 is HIGH. The amount that the output voltage of the power supply changes with voltage margining, will be equal to 2.468V x the ratio of the external feedback resistor and the external resistor tied to VMSET. Figure 11 shows the positive and negative margining for a 3.3V output, using a 20.5kΩ feedback resistor and using various VMSET resistor values.

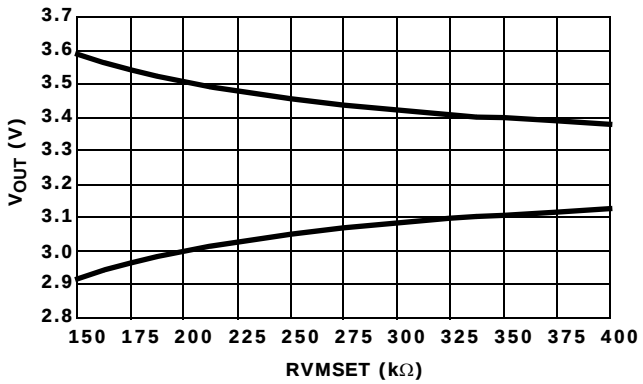

FIGURE 11. VOLTAGE MARGINING vs. VMSET RESISTANCE

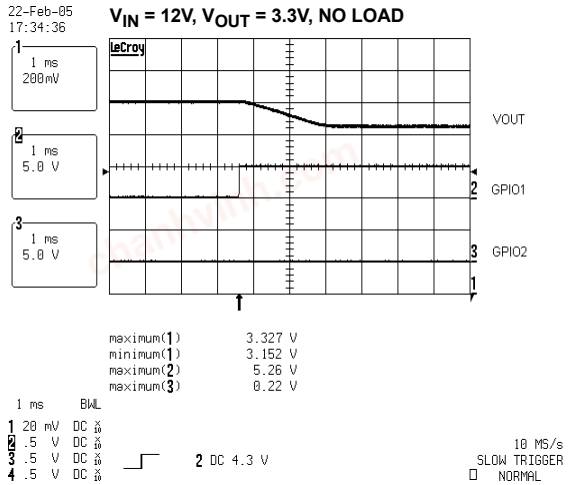

FIGURE 12A.

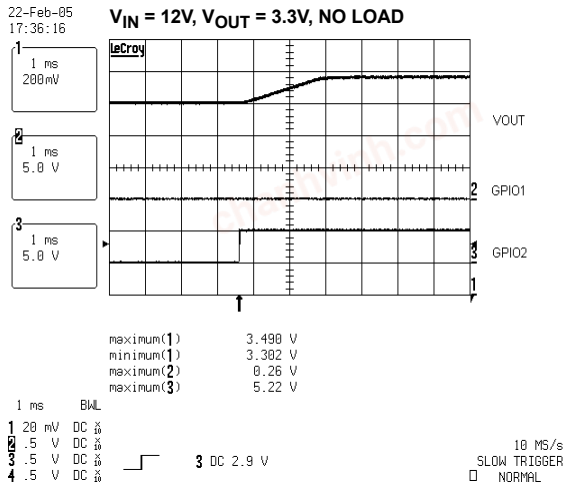

FIGURE 12B.

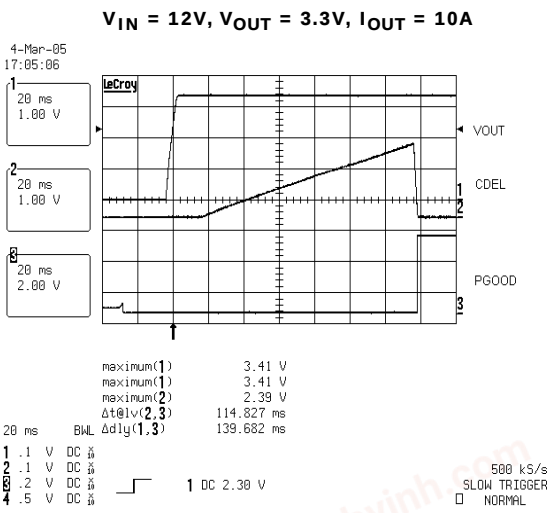

FIGURE 13. PGOOD DELAY

chanhvinh.com

The slew time of the current is set by an external capacitor on the CDEL pin, which is charged and discharged with a 100µA current source. The change in voltage on the capacitor is 2.5V. This same capacitor is used to set the PGOOD active delay after soft-start. When PGOOD is low, the internal PGOOD circuitry uses the capacitor and when PGOOD is high, the voltage margining circuit uses the capacitor. The slew time for voltage margining can be in the range of 300µs to 2ms.

External Reference / DDR Supply

The voltage margining can be disabled by connecting the VMSET/MODE to VCC5. In this mode, the chip can be configured to work with an external reference input and provide a buffered reference output.

If VMSET/MODE pin and the GPIO1/REFIN pin are both tied to VCC5, then the internal 0.6V reference is used as the error amplifier non-inverting input. The buffered reference output on REFOUT will be 0.6V ±0.01V, capable of sourcing 20mA and sinking up to 50µA current with a 2.2µF capacitor connected to the REFOUT pin.

If the VMSET/MODE pin is tied to high but GPIO1/REFIN is connected to an external voltage source between 0.6V to 1.25V, then this external voltage is used as the reference voltage at the positive input of the error amplifier. The buffered reference output on REFOUT will be Vrefin ±0.01V, capable of sourcing 20mA and sinking up to 50µA current with a 2.2µF capacitor on the REFOUT pin.

Power-Good

The PGOOD pin can be used to monitor the status of the output voltage. PGOOD will be true (open drain) when the FB pin is within ±10% of the reference and the ENSS pin has completed its soft-start ramp.

Additionally, a capacitor on the CDEL pin will set a delay for the PGOOD signal. After the ENSS pin completes its soft-start ramp, a 2µA current begins charging the CDEL capacitor to 2.5V. The capacitor will be quickly discharged before PGOOD goes high. The programmable delay can be used to sequence multiple converters or as a LOW-true reset signal.

If the voltage on the FB pin exceeds ±10% of the reference, then PGOOD will go low after 1µs of noise filtering.

Over-Temperature Protection

The IC is protected against over-temperature conditions. When the junction temperature exceeds +150°C, the PWM shuts off. Normal operation is resumed when the junction temperature is cooled down to +130°C.

Shutdown

When ENSS pin is below 1V, the regulator is disabled with the PWM output drivers tri-stated. When disabled, the IC power will be reduced.

Undervoltage

If the voltage on the FB pin is less than 15% of the reference voltage for 8 consecutive PWM cycles, then the circuit enters into soft-start hiccup mode. This mode is identical to the overcurrent hiccup mode.

Overvoltage Protection

If the voltage on the FB pin exceeds the reference voltage by 15%, the lower gate driver is turned on continuously to discharge the output voltage. If the overvoltage condition continues for 32 consecutive PWM cycles, then the chip is turned off with the gate drivers tri-stated. The voltage on the FB pin will fall and reach the 15% undervoltage threshold. After 8 clock cycles, the chip will enter soft-start hiccup mode. This mode is identical to the overcurrent hiccup mode.

Gate Control Logic

The gate control logic translates generated PWM control signals into the MOSFET gate drive signals providing necessary amplification, level shifting and shoot-through protection. Also, it has functions that help optimize the IC performance over a wide range of operational conditions.

Since MOSFET switching time can vary dramatically from type to type and with the input voltage, the gate control logic provides adaptive dead time by monitoring the gate-to-source voltages of both upper and lower MOSFETs. The lower MOSFET is not turned on until the gate-to-source voltage of the upper MOSFET has decreased to less than approximately 1V. Similarly, the upper MOSFET is not turned on until the gate-to-source voltage of the lower MOSFET has decreased to less than approximately 1V. This allows a wide variety of upper and lower MOSFETs to be used without a concern for simultaneous conduction, or shoot-through.

Start-up into Pre-Biased Load

The ISL6420B is designed to power-up into a pre-biased load. This is achieved by transitioning from Diode Emulation mode to a Forced Continuous Conduction mode during start-up. The lower gate turns ON for a short period of time and the voltage on the phase pin is sensed. When this goes negative the lower gate is turned OFF and remains OFF till the next cycle. As a result, the inductor current will not go negative during soft-start and thus will not discharge the pre-biased load. The waveform for this condition is shown in Figure 14.

chanhvinh.com

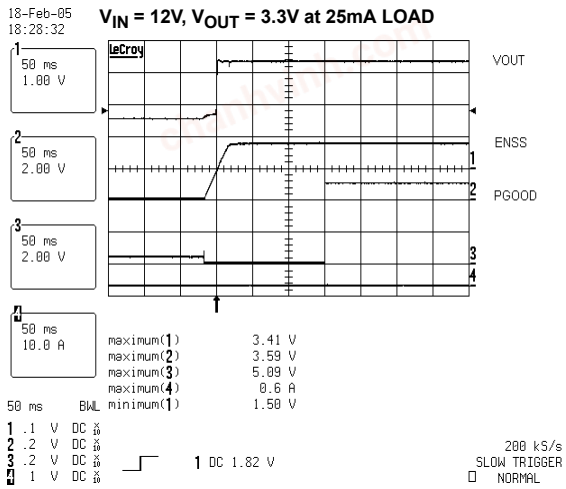

FIGURE 14. PREBIASED OUTPUT AT 25mA LOAD

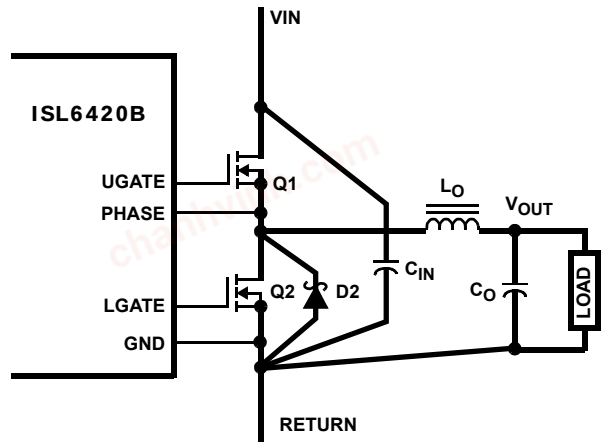

FIGURE 15. PRINTED CIRCUIT BOARD POWER AND GROUND PLANES OR ISLANDS

Application Guidelines

Layout Considerations

As in any high frequency switching converter, layout is very important. Switching current from one power device to another can generate voltage transients across the impedances of the interconnecting bond wires and circuit traces. These interconnecting impedances should be minimized by using wide, short printed circuit traces. The critical components should be located as close together as possible using ground plane construction or single point grounding.

Figure 15 shows the critical power components of the converter. To minimize the voltage overshoot the interconnecting wires indicated by heavy lines should be part of ground or power plane in a printed circuit board. The components shown in Figure 15 should be located as close together as possible. Please note that the capacitors C_{IN} and C_O each represent numerous physical capacitors. Locate the ISL6420B within 3 inches of the MOSFETs, Q_1 and Q_2. The circuit traces for the MOSFETs' gate and source connections from the ISL6420B must be sized to handle up to 1A peak current.

Figure 16 shows the circuit traces that require additional layout consideration. Use single point and ground plane construction for the circuits shown. Minimize any leakage current paths on the SS PIN and locate the capacitor, C_{SS} close to the SS pin because the internal current source is only 10µA. Provide local V_{CC} decoupling between VCC and GND pins. Locate the capacitor, C_{BOOT} as close as practical to the BOOT and PHASE pins.

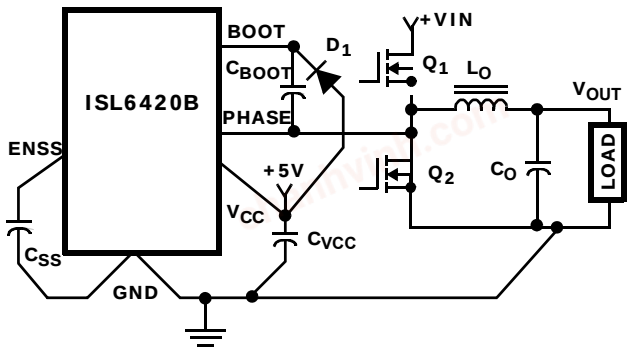

FIGURE 16. PRINTED CIRCUIT BOARD SMALL SIGNAL LAYOUT GUIDELINES

Feedback Compensation

Figure 17 highlights the voltage-mode control loop for a synchronous-rectified buck converter. The output voltage (V_{OUT}) is regulated to the Reference voltage level. The error amplifier (Error Amp) output ($V_{E/A}$) is compared with the oscillator (OSC) triangular wave to provide a pulse-width modulated (PWM) wave with an amplitude of VIN at the PHASE node. The PWM wave is smoothed by the output filter (L_O and C_O).

The modulator transfer function is the small-signal transfer function of $V_{OUT}/V_{E/A}$. This function is dominated by a DC Gain and the output filter (L_O and C_O), with a double pole break frequency at F_{LC} and a zero at F_{ESR}. The DC Gain of the modulator is simply the input voltage (VIN) divided by the peak-to-peak oscillator voltage ΔV_{OSC}.

chanhvinh.com

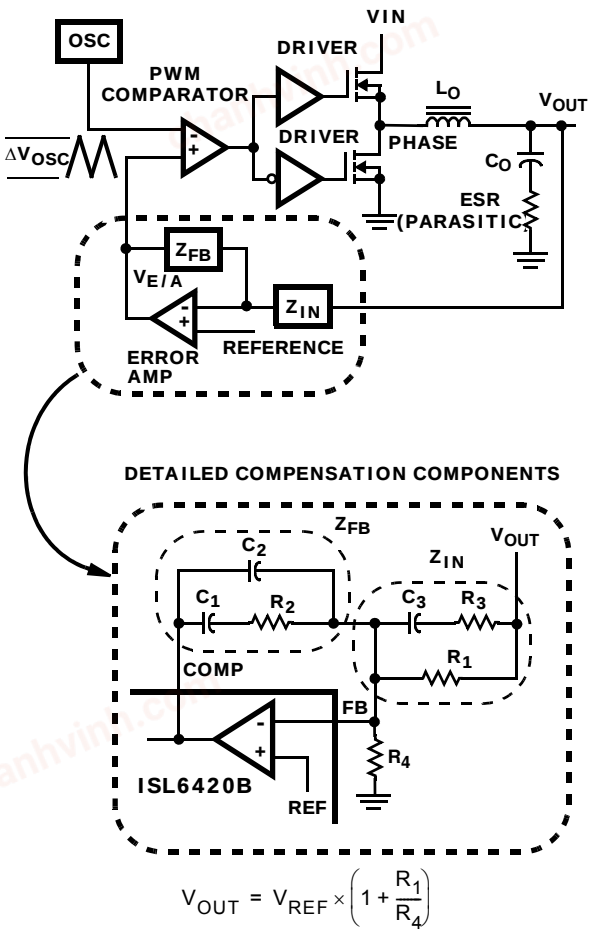

FIGURE 17. VOLTAGE - MODE BUCK CONVERTER COMPENSATION DESIGN

Modulator Break Frequency Equations

$$F_{LC} = \frac{1}{2\pi \bullet \sqrt{L_O \bullet C_O}} \quad \text{(EQ. 4)}$$

$$F_{ESR} = \frac{1}{2\pi \bullet (ESR \bullet C_O)} \quad \text{(EQ. 5)}$$

The compensation network consists of the error amplifier (internal to the ISL6420B) and the impedance networks Z_{IN} and Z_{FB}. The goal of the compensation network is to provide a closed loop transfer function with the highest 0dB crossing frequency (f_{0dB}) and adequate phase margin. Phase margin is the difference between the closed loop phase at f_{0dB} and 180°. The following equations relate the compensation network's poles, zeros and gain to the components (R_1, R_2, R_3, C_1, C_2, and C_3) in Figure 17. Use the following guidelines for locating the poles and zeros of the compensation network.

Compensation Break Frequency Equations

$$F_{Z1} = \frac{1}{2\pi \bullet R2 \bullet C1} \quad \text{(EQ. 6)}$$

$$F_{P1} = \frac{1}{2\pi \bullet R2 \bullet \left(\frac{C1 \bullet C2}{C1 + C2}\right)} \quad \text{(EQ. 7)}$$

$$F_{Z2} = \frac{1}{2\pi \bullet (R1 + R3) \bullet C3} \quad \text{(EQ. 8)}$$

$$F_{P2} = \frac{1}{2\pi \bullet R3 \bullet C3} \quad \text{(EQ. 9)}$$

1. Pick Gain (R2/R1) for desired converter bandwidth
2. Place 1ST Zero Below Filter's Double Pole (~75% F_{LC})
3. Place 2ND Zero at Filter's Double Pole
4. Place 1ST Pole at the ESR Zero
5. Place 2ND Pole at Half the Switching Frequency
6. Check Gain against Error Amplifier's Open-Loop Gain
7. Estimate Phase Margin - Repeat if Necessary

Figure 18 shows an asymptotic plot of the DC/DC converter's gain vs. frequency. The actual Modulator Gain has a high gain peak due to the high Q factor of the output filter and is not shown in Figure 18. Using the previously mentioned guidelines should give a Compensation Gain similar to the curve plotted. The open loop error amplifier gain bounds the compensation gain. Check the compensation gain at F_{P2} with the capabilities of the error amplifier. The Loop Gain is constructed on the log-log graph of Figure 18 by adding the Modulator Gain (in dB) to the Compensation Gain (in dB). This is equivalent to multiplying the modulator transfer function to the compensation transfer function and plotting the gain.

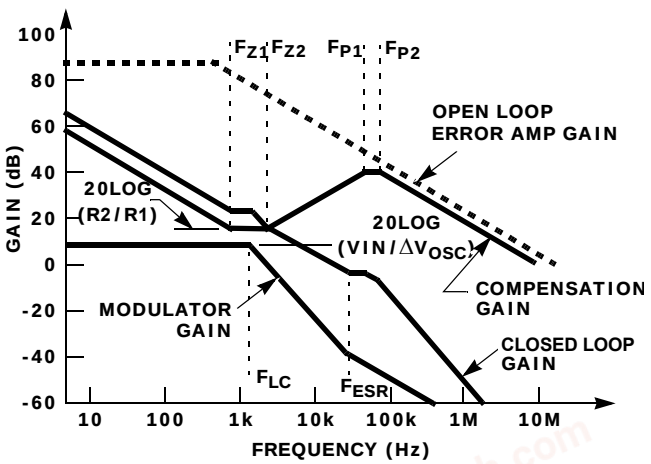

FIGURE 18. ASYMPTOTIC BODE PLOT OF CONVERTER GAIN

chanhvinh.com

The compensation gain uses external impedance networks Z_{FB} and Z_{IN} to provide a stable, high bandwidth (BW) overall loop. A stable control loop has a gain crossing with -20dB/decade slope and a phase margin greater than 45°. Include worst case component variations when determining phase margin.

Component Selection Guidelines

Output Capacitor Selection

An output capacitor is required to filter the output and supply the load transient current. The filtering requirements are a function of the switching frequency and the ripple current. The load transient requirements are a function of the slew rate (di/dt) and the magnitude of the transient load current. These requirements are generally met with a mix of capacitors and careful layout.

Modern microprocessors produce transient load rates above 1A/ns. High frequency capacitors initially supply the transient and slow the current load rate seen by the bulk capacitors. The bulk filter capacitor values are generally determined by the ESR (effective series resistance) and voltage rating requirements rather than actual capacitance requirements.

High frequency decoupling capacitors should be placed as close to the power pins of the load as physically possible. Be careful not to add inductance in the circuit board wiring that could cancel the usefulness of these low inductance components. Consult with the manufacturer of the load on specific decoupling requirements. For example, Intel recommends that the high frequency decoupling for the Pentium Pro be composed of at least forty (40) 1.0µF ceramic capacitors in the 1206 surface-mount package.

Use only specialized low-ESR capacitors intended for switching-regulator applications for the bulk capacitors. The bulk capacitor's ESR will determine the output ripple voltage and the initial voltage drop after a high slew-rate transient. An aluminum electrolytic capacitor's ESR value is related to the case size with lower ESR available in larger case sizes. However, the equivalent series inductance (ESL) of these capacitors increases with case size and can reduce the usefulness of the capacitor to high slew-rate transient loading. Unfortunately, ESL is not a specified parameter. Work with your capacitor supplier and measure the capacitor's impedance with frequency to select a suitable component. In most cases, multiple electrolytic capacitors of small case size perform better than a single large case capacitor.

Output Inductor Selection

The output inductor is selected to meet the output voltage ripple requirements and minimize the converter's response time to the load transients. The inductor value determines the converter's ripple current and the ripple voltage is a function of the ripple current and the output capacitors ESR. The ripple voltage and current are approximated by Equations 10 and 11:

$$\Delta I_L = \frac{V_{IN} - V_{OUT}}{Fs \times L} \cdot \frac{V_{OUT}}{V_{IN}} \quad \text{(EQ. 10)}$$

$$\Delta V_{OUT} = \Delta I_L \cdot ESR \quad \text{(EQ. 11)}$$

Increasing the value of inductance reduces the ripple current and voltage. However, larger inductance values reduce the converter's response time to a load transient.

One of the parameters limiting the converter's response to a load transient is the time required to change the inductor current. Given a sufficiently fast control loop design, the ISL6420B will provide either 0% or 100% duty cycle in response to a load transient. The response time is the time required to slew the inductor current from an initial current value to the transient current level. During this interval the difference between the inductor current and the transient current level must be supplied by the output capacitor. Minimizing the response time can minimize the output capacitance required.

The response time to a transient is different for the application of load and the removal of load. Equations 12 and 13 give the approximate response time interval for application and removal of a transient load:

$$t_{RISE} = \frac{L_O \times I_{TRAN}}{V_{IN} - V_{OUT}} \quad \text{(EQ. 12)}$$

$$t_{FALL} = \frac{L_O \times I_{TRAN}}{V_{OUT}} \quad \text{(EQ. 13)}$$

where: I_{TRAN} is the transient load current step, t_{RISE} is the response time to the application of load, and t_{FALL} is the response time to the removal of load. With a +5V input source, the worst case response time can be either at the application or removal of load and dependent upon the output voltage setting. Be sure to check both of these equations at the minimum and maximum output levels for the worst case response time.

Input Capacitor Selection

Use a mix of input bypass capacitors to control the voltage overshoot across the MOSFETs. Use small ceramic capacitors for high frequency decoupling and bulk capacitors to supply the current needed each time Q_1 turns on. Place the small ceramic capacitors physically close to the MOSFETs and between the drain of Q_1 and the source of Q_2.

The important parameters for the bulk input capacitor are the voltage rating and the RMS current rating. For reliable operation, select the bulk capacitor with voltage and current ratings above the maximum input voltage and largest RMS current required by the circuit. The capacitor voltage rating should be at least 1.25 x greater than the maximum input voltage and a voltage rating of 1.5 x is a conservative guideline. The RMS current rating requirement for the input capacitor of a buck regulator is approximately 1/2 the DC load current. Equation 14

chanhvinh.com

shows a more specific formula for determining the input ripple:

$$I_{RMS} = I_{MAX} \cdot \sqrt{(D - D^2)} \quad \text{(EQ. 14)}$$

For a through hole design, several electrolytic capacitors (Panasonic HFQ series or Nichicon PL series or Sanyo MV-GX or equivalent) may be needed. For surface mount designs, solid tantalum capacitors can be used, but caution must be exercised with regard to the capacitor surge current rating. These capacitors must be capable of handling the surge-current at power-up. The TPS series available from AVX, and the 593D series from Sprague are both surge current tested.

MOSFET Selection / Considerations

The ISL6420B requires 2 N-Channel power MOSFETs. These should be selected based upon $r_{DS(ON)}$, gate supply requirements, and thermal management requirements.

In high-current applications, the MOSFET power dissipation, package selection and heatsink are the dominant design factors. The power dissipation includes two loss components; conduction loss and switching loss. The conduction losses are the largest component of power dissipation for both the upper and the lower MOSFETs. These losses are distributed between the two MOSFETs according to duty factor (see Equations 15 and 16). Only the upper MOSFET has switching losses, since the Schottky rectifier clamps the switching node before the synchronous rectifier turns on.

$$P_{UFET} = I_O^2 \cdot r_{DS(ON)} \cdot D + \frac{1}{2} I_O \cdot V_{IN} \cdot t_{sw} \cdot f_{sw} \quad \text{(EQ. 15)}$$

$$P_{LFET} = I_O^2 \cdot r_{DS(ON)} \cdot (1 - D) \quad \text{(EQ. 16)}$$

Where D is the duty cycle = Vo/VIN, t_{SW} is the switching interval, and f_{SW} is the switching frequency.

These equations assume linear voltage-current transitions and do not adequately model power loss due the reverse recovery of the lower MOSFET's body diode. The gate-charge losses are dissipated by the ISL6420B and don't heat the MOSFETs. However, large gate-charge increases the switching interval, t_{SW} which increases the upper MOSFET switching losses. Ensure that both MOSFETs are within their maximum junction temperature at high ambient temperature by calculating the temperature rise according to package thermal-resistance specifications. A separate heatsink may be necessary depending upon MOSFET power, package type, ambient temperature and air flow.

Schottky Selection

Rectifier D_2 is a clamp that catches the negative inductor swing during the dead time between turning off the lower MOSFET and turning on the upper MOSFET. The diode must be a Schottky type to prevent the parasitic MOSFET body diode from conducting. It is acceptable to omit the diode and let the body diode of the lower MOSFET clamp the negative inductor swing, but efficiency will drop one or two percent as a result. The diode's rated reverse breakdown voltage must be greater than the maximum input voltage.

© Copyright Intersil Americas LLC 2009. All Rights Reserved.
All trademarks and registered trademarks are the property of their respective owners.

For additional products, see www.intersil.com/en/products.html

Intersil products are manufactured, assembled and tested utilizing ISO9001 quality systems as noted in the quality certifications found at www.intersil.com/en/support/qualandreliability.html

Intersil products are sold by description only. Intersil may modify the circuit design and/or specifications of products at any time without notice, provided that such modification does not, in Intersil's sole judgment, affect the form, fit or function of the product. Accordingly, the reader is cautioned to verify that datasheets are current before placing orders. Information furnished by Intersil is believed to be accurate and reliable. However, no responsibility is assumed by Intersil or its subsidiaries for its use; nor for any infringements of patents or other rights of third parties which may result from its use. No license is granted by implication or otherwise under any patent or patent rights of Intersil or its subsidiaries.

For information regarding Intersil Corporation and its products, see www.intersil.com

chanhvinh.com

Package Outline Drawing

L20.4x4

20 LEAD QUAD FLAT NO-LEAD PLASTIC PACKAGE
Rev 1, 11/06

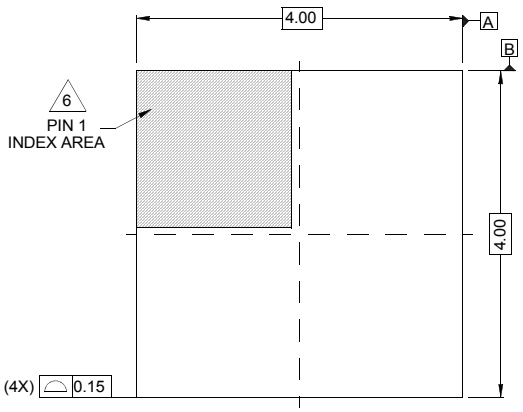

TOP VIEW

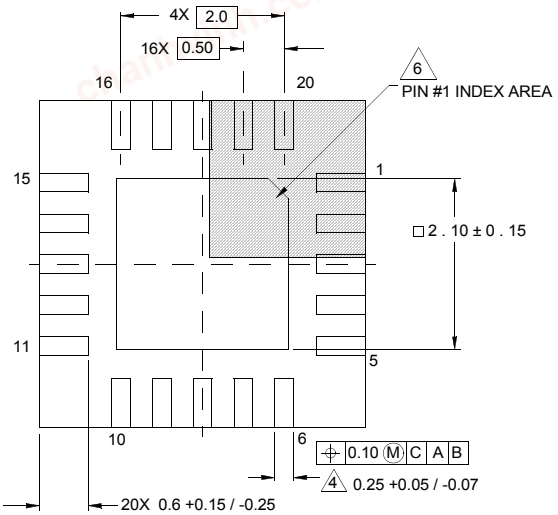

BOTTOM VIEW

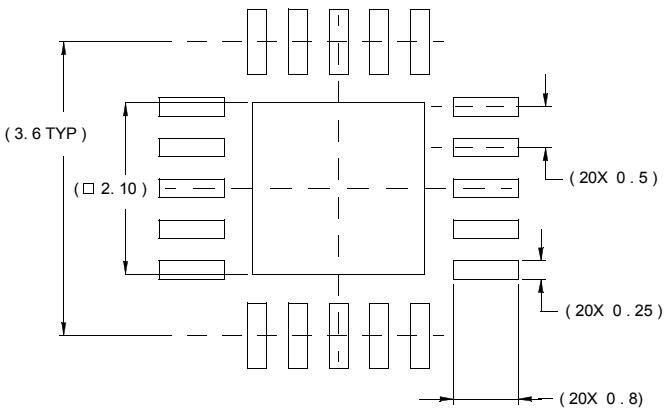

TYPICAL RECOMMENDED LAND PATTERN

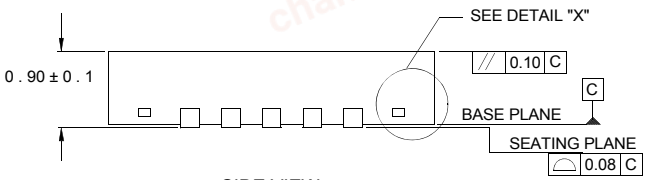

SIDE VIEW

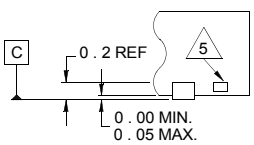

DETAIL "X"

NOTES:

1. Dimensions are in millimeters.
   Dimensions in ( ) for Reference Only.
2. Dimensioning and tolerancing conform to AMSE Y14.5m-1994.
3. Unless otherwise specified, tolerance : Decimal ± 0.05
4. Dimension b applies to the metallized terminal and is measured between 0.15mm and 0.30mm from the terminal tip.
5. Tiebar shown (if present) is a non-functional feature.
6. The configuration of the pin #1 identifier is optional, but must be located within the zone indicated. The pin #1 indentifier may be either a mold or mark feature.

chanhvinh.com

Shrink Small Outline Plastic Packages (SSOP)
Quarter Size Outline Plastic Packages (QSOP)

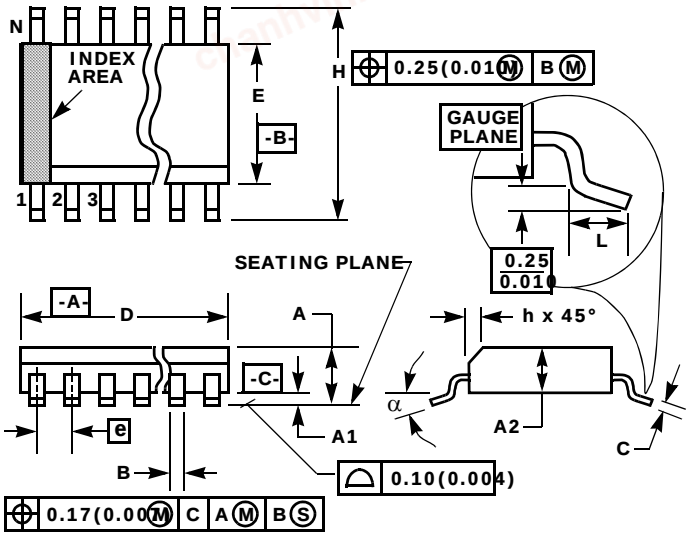

NOTES:

1. Symbols are defined in the "MO Series Symbol List" in Section 2.2 of Publication Number 95.
2. Dimensioning and tolerancing per ANSI Y14.5M-1982.
3. Dimension "D" does not include mold flash, protrusions or gate burrs. Mold flash, protrusion and gate burrs shall not exceed 0.15mm (0.006 inch) per side.
4. Dimension "E" does not include interlead flash or protrusions. Interlead flash and protrusions shall not exceed 0.25mm (0.010 inch) per side.
5. The chamfer on the body is optional. If it is not present, a visual index feature must be located within the cross-hatched area.
6. "L" is the length of terminal for soldering to a substrate.
7. "N" is the number of terminal positions.
8. Terminal numbers are shown for reference only.
9. Dimension "B" does not include dambar protrusion. Allowable dambar protrusion shall be 0.10mm (0.004 inch) total in excess of "B" dimension at maximum material condition.
10. Controlling dimension: INCHES. Converted millimeter dimensions are not necessarily exact.

M20.15

20 LEAD SHRINK SMALL OUTLINE PLASTIC PACKAGE (0.150" WIDE BODY)

SYMBOL	INCHES		MILLIMETERS		NOTES
	MIN	MAX	MIN	MAX	
A	0.053	0.069	1.35	1.75	-
A1	0.004	0.010	0.10	0.25	-
A2	-	0.061	-	1.54	-
B	0.008	0.012	0.20	0.30	9
C	0.007	0.010	0.18	0.25	-
D	0.337	0.344	8.56	8.74	3
E	0.150	0.157	3.81	3.98	4
e	0.025 BSC		0.635 BSC		-
H	0.228	0.244	5.80	6.19	-
h	0.0099	0.0196	0.26	0.49	5
L	0.016	0.050	0.41	1.27	6
N	20		20		7
α	0°	8°	0°	8°	-

Rev. 1 6/04