chanhvinh.com



# ISL28006

Micropower, Rail to Rail Input Current Sense Amplifier with Voltage Output

The ISL28006 is a micropower, unidirectional high-side and low-side current sense amplifier featuring a proprietary rail-to-rail input current sensing amplifier. The ISL28006 is ideal for high-side current sense applications where the sense voltage is usually much higher than the amplifier supply voltage. The device can be used to sense voltages as high as 28V when operating from a supply voltage as low as 2.7V. The micropower ISL28006 consumes only 50µA of supply current when operating from a 2.7V to 28V supply.

The ISL28006 features a common-mode input voltage range from 0V to 28V. The proprietary architecture extends the input voltage sensing range down to 0V, making it an excellent choice for low-side ground sensing applications. The benefit of this architecture is that a high degree of total output accuracy is maintained over the entire 0V to 28V common mode input voltage range.

The ISL28006 is available in fixed (100V/V, 50V/V, 20V/V and Adjustable) gains in the space saving 5 Ld SOT-23 package and the 6 Ld SOT-23 package for the adjustable gain part. The parts operate over the extended temperature range from -40°C to +125°C.

## Features

- Low Power Consumption: 50µA, Typ
- Supply Range: 2.7V to 28V
- Wide Common Mode Input: 0V to 28V
- Gain Versions
  - ISL28006-100: 100V/V
  - ISL28006-50: 50V/V
  - ISL28006-20: 20V/V
  - ISL28006-ADJ: ADJ (Min Gain = 20V/V)
- Operating Temperature Range: -40°C to +125°C
- Packages: 5 Ld SOT-23, 6 Ld SOT-23

## Applications

- Power Management/Monitors
- Power Distribution and Safety
- DC/DC, AC/DC Converters
- Battery Management/Charging
- Automotive Power Distribution

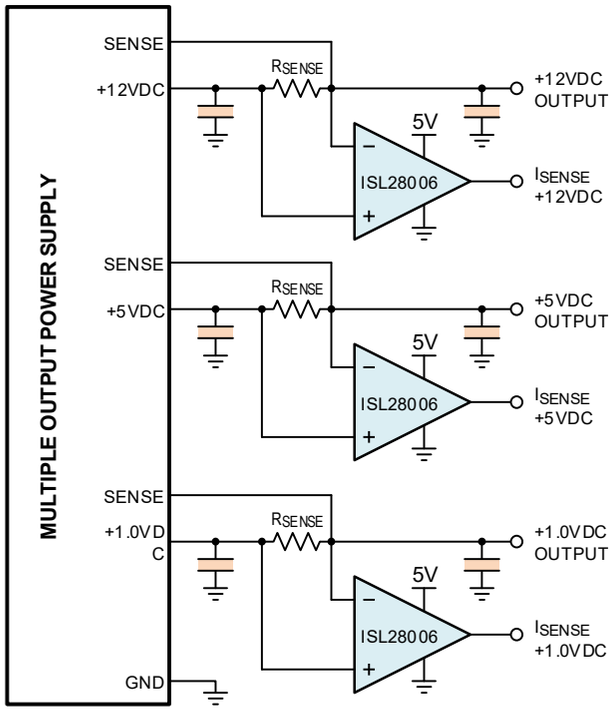


**Figure 1. Typical Application**

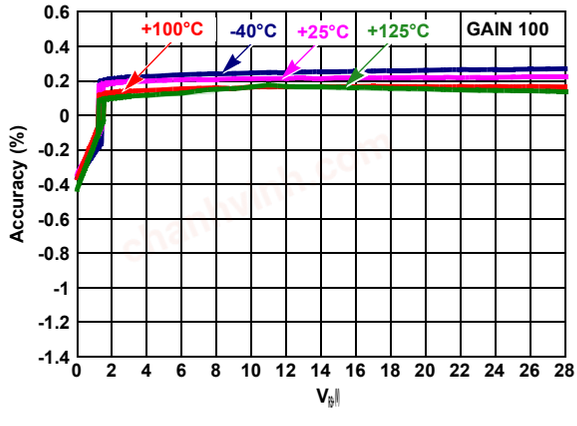


**Figure 2. Gain Accuracy vs $V_{RS+}$ = 0V to 28V**


© 2009-2022 Renesas Electronics

chanhvinh.com



# Contents


**1. Overview . . . 3**
1.1 Block Diagram . . . 3
**2. Pin Information . . . 4**
2.1 Pin Assignments . . . 4
2.2 Pin Descriptions . . . 4
**3. Specifications . . . 5**
3.1 Absolute Maximum Ratings . . . 5
3.2 ESD Ratings . . . 5
3.3 Recommended Operating Conditions . . . 5
3.4 Thermal Specifications . . . 5
3.5 Electrical Specifications . . . 6
**4. Typical Performance Graphs . . . 9**
4.1 Test Circuits and Wavefomrs . . . 21
**5. Applications Information . . . 22**
5.1 Functional Description . . . 22
5.2 Hysteretic Comparator . . . 24
5.3 Typical Application Circuit . . . 24
5.4 Error Sources . . . 25
**6. Layout Guidelines . . . 25**
6.1 The Kelvin Connected Sense Resistor . . . 25
6.2 Overall Accuracy (VOA %) . . . 26
6.3 Power Dissipation . . . 26
**7. Package Outline Drawings . . . 27**
**8. Ordering Information . . . 29**
**9. Revision History . . . 29**

chanhvinh.com



# 1. Overview

## 1.1 Block Diagram

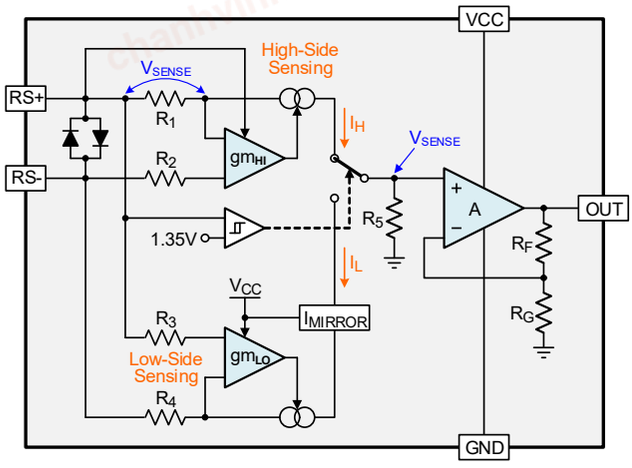


Fixed Gain Parts

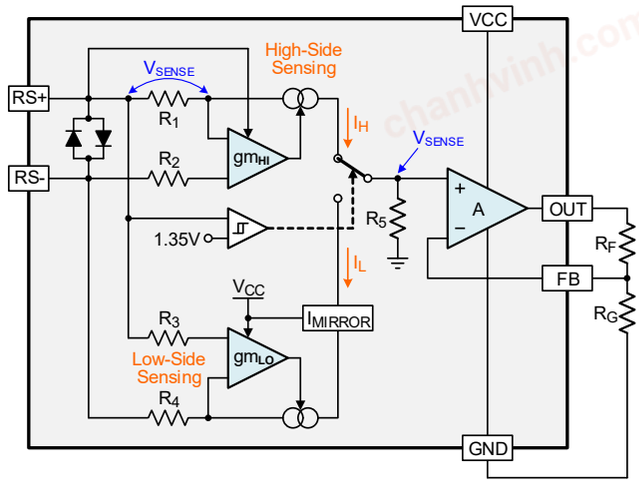


Adjustable Gain Part

chanhvinh.com



# 2. Pin Information

## 2.1 Pin Assignments

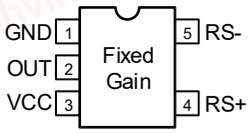


(5 ld SOT-23)
Top View

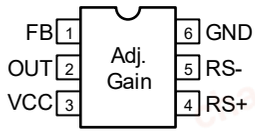


(6 ld sot-23)
Top View

## 2.2 Pin Descriptions

| ISL28006-100, 50, 20 (5 LD SOT-23) | ISL28006-ADJ (6 LD SOT-23) | Pin Name | Description |
|---|---|---|---|
| 1 | 6 | GND | Power Ground |
| | 1 | FB | Input Pin for External Resistors |
| 2 | 2 | OUT | Amplifier Output |
| 3 | 3 | $V_{CC}$ | Positive Power Supply |
| 4 | 4 | $R_{S+}$ | Sense Voltage Non-inverting Input |
| 5 | 5 | $R_{S-}$ | Sense Voltage Inverting Input |

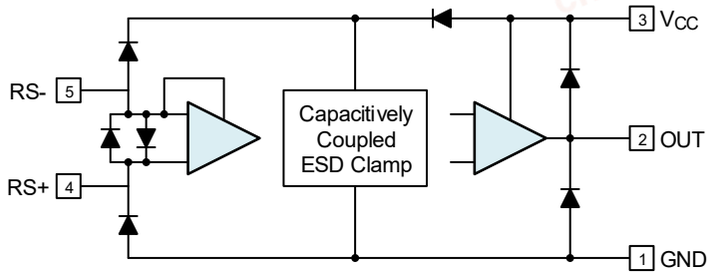


5 Ld

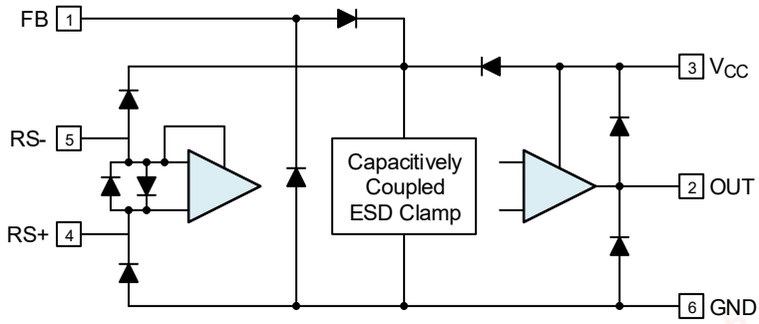


6 Ld

chanhvinh.com



# 3. Specifications

## 3.1 Absolute Maximum Ratings

**CAUTION:** Do not operate at or near the maximum ratings listed for extended periods of time. Exposure to such conditions can adversely impact product reliability and result in failures not covered by warranty.

| Parameter | Minimum | Maximum | Unit |
|---|---|---|---|
| Max Supply Voltage | | 28 | V |
| Max Differential Input Current | | 20 | mA |
| Max Differential Input Voltage | | ±0.5 | V |
| Max Input Voltage (RS+, RS-, FB) | GND - 0.5 | 30 | V |
| Max Input Current for Input Voltage <GND - 0.5V | | ±20 | mA |
| Output Short-Circuit Duration | | Indefinite | |

## 3.2 ESD Ratings

| ESD Model/Test | Rating | Unit |
|---|---|---|
| Human Body Model (Tested per JESD22-A114F) | 4 | kV |
| Charged Device Model (Tested per JESD22-C101D) | 1.5 | kV |
| Machine Model (Tested per EIA/JESD22-A115-A) | 200 | V |
| Di-Electrically Isolated PR40 Process | Latch-up free | |

## 3.3 Recommended Operating Conditions

| Parameter | Minimum | Maximum | Unit |
|---|---|---|---|
| Ambient Temperature | -40 | +125 | °C |

## 3.4 Thermal Specifications

| Thermal Resistance (Typical) | $\theta_{JA}$ (°C/W)[1] | $\theta_{JC}$ (°C/W)[2] |
|---|---|---|
| 5 Ld SOT-23 Package | 190 | 90 |
| 6 Ld SOT-23 Package | 180 | 90 |

1. $\theta_{JA}$ is measured with the component mounted on a high-effective thermal conductivity test board in free air. See TB379 for details.
2. For $\theta_{JC}$, the case temperature location is taken at the package top center.

| Parameter | Minimum | Maximum | Unit |
|---|---|---|---|
| Maximum Junction Temperature | | +150 | °C |
| Maximum Storage Temperature Range | -65 | +150 | °C |
| Pb-Free Reflow Profile | see TB493 | | |

chanhvinh.com



## 3.5 Electrical Specifications

$V_{CC}$ = 12V, $V_{RS+}$ = 0V to 28V, $V_{SENSE}$ = 0V, $R_{LOAD}$ = 1MΩ, $T_A$ = +25°C unless otherwise specified. **Boldface limits apply acros the operating temperature range, -40°C to +125°C. Temperature data established by characterization**.

| Parameter | Symbol | Conditions | Min[1] | Typ | Max[1] | Unit |
|---|---|---|---|---|---|---|
| Input Offset Voltage[2][3]<br>Gain = 100 | $V_{OS}$ | $V_{CC}$ = $V_{RS}$+ = 12V,<br>$V_{SENSE}$ = 20mV to 100mV | -250 | 60 | 250 | µV |
| | | | **-300** | | **300** | µV |
| | | $V_{CC}$ = 12V, $V_{RS}$+ = 0.2V,<br>$V_{SENSE}$ = 20mV to 100mV | -2.5 | -1.2 | 2.5 | mV |
| | | | **-2.8** | | **2.8** | mV |
| Input Offset Voltage[2][3]<br>Gain = 50, Gain = 20 | | $V_{CC}$ = $V_{RS}$+ = 12V,<br>$V_{SENSE}$ = 20mV to 100mV | -300 | 60 | 300 | µV |
| | | | **-450** | | **450** | µV |
| | | $V_{CC}$ = 12V, $V_{RS}$+ = 0.2V,<br>$V_{SENSE}$ = 20mV to 100mV | -2.8 | -1.2 | 2.8 | mV |
| | | | **-3.2** | | **3.2** | mV |
| Input Offset Voltage[2][3]<br>Adjustable, Gain = 21<br>$R_f$ = 100kΩ, $R_g$ = 5kΩ | | $V_{CC}$ = $V_{RS}$+ = 12V,<br>$V_{SENSE}$ = 20mV to 100mV | -300 | 60 | 300 | µV |
| | | | **-450** | | **450** | µV |
| | | $V_{CC}$ = 12V, $V_{RS}$+ = 0.2V,<br>$V_{SENSE}$ = 20mV to 100mV | -3.1 | -1.2 | 3.1 | mV |
| | | | **-3.4** | | **3.4** | mV |
| Leakage Current | $I_{RS}$+, $I_{RS}$ - | $V_{CC}$ = 0V, $V_{RS+}$ = 28V | | 0.041 | 1.2 | µA |
| | | | | | 1.5 | µA |
| + Input Bias Current<br>Gain = 100 | $I_{RS}$+ | $V_{RS}$+ = 2V, $V_{SENSE}$ = 5mV | | 4.7 | 6 | µA |
| | | | | | 7 | µA |
| | | $V_{RS}$+ = 0V, $V_{SENSE}$ = 5mV | -500 | -432 | | nA |
| | | | **-600** | | | nA |
| + Input Bias Current<br>Gain = 50, Gain = 20 | | $V_{RS}$+ = 2V, $V_{SENSE}$ = 5mV | | 4.7 | 6 | µA |
| | | | | | 8 | µA |
| | | $V_{RS}$+ = 0V, $V_{SENSE}$ = 5mV | -700 | -432 | | nA |
| | | | **-840** | | | nA |
| + Input Bias Current<br>ADJ Gain = 101<br>$R_f$ = 100kΩ, $R_g$ = 1kΩ | | $V_{RS}$+ = 2V, $V_{SENSE}$ = 5mV | | 4.7 | 6 | µA |
| | | | | | 7 | µA |
| | | $V_{RS}$+ = 0V, $V_{SENSE}$ = 5mV | -500 | -432 | | nA |
| | | | **-600** | | | nA |
| - Input Bias Current<br>G = 100, 50, 20, ADJ | $I_{RS}$ - | $V_{RS}$+ = 2V, $V_{SENSE}$ = 5mV | | 5 | 50 | nA |
| | | | | | **75** | nA |
| | | $V_{RS}$+ = 0V, $V_{SENSE}$ = 5mV | -125 | -45 | | nA |
| | | | **-130** | | | nA |
| Common Mode Rejection Ratio | CMRR | $V_{RS}$+ = 2V to 28V | 105 | 115 | | dB |
| Power Supply Rejection Ratio | PSRR | $V_{CC}$ = 2.7V to 28V, $V_{RS}$+ = 2V | 90 | 105 | | dB |
| Full-scale Sense Voltage | $V_{FS}$ | $V_{CC}$ = 28V, $V_{RS}$+ = 0.2V, 12V | 200 | | | mV |

chanhvinh.com



$V_{CC}$ = 12V, $V_{RS+}$ = 0V to 28V, $V_{SENSE}$ = 0V, $R_{LOAD}$ = 1MΩ, $T_A$ = +25°C unless otherwise specified. **Boldface limits apply acros the operating temperature range, -40°C to +125°C. Temperature data established by characterization**. (Cont.)

| Parameter | Symbol | Conditions | Min[1] | Typ | Max[1] | Unit |
|---|---|---|---|---|---|---|
| Gain [2] | G | ISL28006-100 | | 100 | | V/V |
| | | ISL28006-50 | | 50 | | V/V |
| | | ISL28006-20 | | 20 | | V/V |
| | | ISL28006-ADJ | 20 | | | V/V |
| Gain Accuracy [4]<br>Gain = 100 | $G_A$ | $V_{CC}$ = $V_{RS}$+ = 12V,<br>$V_{SENSE}$ = 20mV to 100mV | -0.2 | | 0.7 | % |
| | | | **-1** | | **1** | % |
| | | $V_{CC}$ = 12V, $V_{RS}$+ = 0.1V,<br>$V_{SENSE}$ = 20mV to 100mV | | -0.25 | | % |
| Gain Accuracy[4]<br>Gain = 50, Gain = 20 | | $V_{CC}$ = $V_{RS}$+ = 12V,<br>$V_{SENSE}$ = 20mV to 100mV | -0.35 | | 0.7 | % |
| | | | **-1** | | **1** | % |
| | | $V_{CC}$ = 12V, $V_{RS}$+ = 0.1V,<br>$V_{SENSE}$ = 20mV to 100mV | -2.2 | -0.33 | 2.2 | % |
| | | | **-2.3** | | **2.3** | % |
| Gain Accuracy [4]<br>ADJ Gain = 21<br>$R_f$ = 100kΩ, $R_g$ = 5kΩ | | $V_{CC}$ = $V_{RS}$+ = 12V,<br>$V_{SENSE}$ = 20mV to 100mV | -0.65 | | 1 | % |
| | | | **-1** | | **1.05** | % |
| | | $V_{CC}$ = 12V, $V_{RS}$+ = 0.1V,<br>$V_{SENSE}$ = 20mV to 100mV | -2.2 | -0.33 | 2.2 | % |
| | | | **-2.3** | | **2.3** | |
| Total Output Accuracy[5]<br>Gain = 100 | $V_{OA}$ | $V_{CC}$ = $V_{RS}$+ = 12V, $V_{SENSE}$ = 100mV | -0.7 | | 0.7 | % |
| | | | **-0.9** | | **0.9** | % |
| | | $V_{CC}$ = 12V, $V_{RS}$+ = 0.1V, $V_{SENSE}$ = 100mV | | -1.25 | | % |
| Total Output Accuracy[5]<br>Gain = 50, Gain = 20 | | $V_{CC}$ = $V_{RS}$+ = 12V, $V_{SENSE}$ = 100mV | -0.7 | | 0.7 | % |
| | | | **-0.9** | | **0.9** | % |
| | | $V_{CC}$ = 12V, $V_{RS}$+ = 0.1V, $V_{SENSE}$ = 100mV | -4.7 | -1.41 | 1.8 | % |
| | | | **-5.2** | | **2.3** | % |
| Total Output Accuracy[5]<br>ADJ Gain = 21<br>$R_f$ = 100kΩ, $R_g$ = 5kΩ | | $V_{CC}$ = $V_{RS}$+ = 12V, $V_{SENSE}$ = 100mV | -0.7 | | 1.05 | % |
| | | | **-0.9** | | **1.2** | % |
| | | $V_{CC}$ = 12V, $V_{RS}$+ = 0.1V, $V_{SENSE}$ = 100mV | -4.7 | -1.41 | 1.8 | % |
| | | | **-5.2** | | **2.3** | % |
| Output Voltage Swing, High<br>$V_{CC}$ - $V_{OUT}$ | $V_{OH}$ | $I_O$ = -500µA, $V_{CC}$ = 2.7V, $V_{SENSE}$ = 100mV,<br>$V_{RS}$+ = 2V | | 39 | 50 | mV |
| Output Voltage Swing, Low<br>$V_{OUT}$ | $V_{OL}$ | $I_O$ = 500µA, $V_{CC}$ = 2.7V, $V_{SENSE}$ = 0V, $V_{RS}$+ = 2V | | 30 | 50 | mV |
| Output Resistance | $R_{OUT}$ | $V_{CC}$ = $V_{RS}$+ = 12V, $V_{SENSE}$ = 100mV,<br>$I_{OUT}$ = 10µA to 1mA | | 6.5 | | Ω |
| Short-Circuit Sourcing Current | $I_{SC+}$ | $V_{CC}$ = $V_{RS}$+ = 5V, $R_L$ = 10Ω | | 4.8 | | mA |
| Short-Circuit Sinking Current | $I_{SC-}$ | $V_{CC}$ = $V_{RS}$+ = 5V, $R_L$ = 10Ω | | 8.7 | | mA |

chanhvinh.com



$V_{CC}$ = 12V, $V_{RS+}$ = 0V to 28V, $V_{SENSE}$ = 0V, $R_{LOAD}$ = 1MΩ, $T_A$ = +25°C unless otherwise specified. **Boldface limits apply acros the operating temperature range, -40°C to +125°C. Temperature data established by characterization**. (Cont.)

| Parameter | Symbol | Conditions | Min[1] | Typ | Max[1] | Unit |
|---|---|---|---|---|---|---|
| Gain = 100 Supply Current | $I_{CC}$ | $V_{RS}$+ > 2V, $V_{SENSE}$ = 5mV | | 50 | 59 | µA |
| | | | | | **62** | µA |
| Gain = 50, 20 Supply Current | | $V_{RS}$+ > 2V, $V_{SENSE}$ = 5mV | | 50 | 62 | µA |
| | | | | | **63** | µA |
| ADJ Gain = 21 Supply Current $R_f$ = 100kΩ, $R_g$ = 5kΩ | | $V_{RS}$+ > 2V, $V_{SENSE}$ = 5mV | | 50 | 62 | µA |
| | | | | | **63** | µA |
| Supply Voltage | $V_{CC}$ | Guaranteed by PSRR | **2.7** | | **28** | V |
| Gain = 100 Slew Rate | SR | Pulse on $R_{S+}$ pin, $V_{OUT}$ = $8V_{P-P}$ (Figure 75) | 0.58 | 0.76 | | V/µs |
| Gain = 50 Slew Rate | | Pulse on $R_{S+}$ pin, $V_{OUT}$ = $8V_{P-P}$ (Figure 75) | 0.58 | 0.67 | | V/µs |
| Gain = 20 Slew Rate | | Pulse on $R_{S+}$ pin, $V_{OUT}$ = $3.5V_{P-P}$ (Figure 75) | 0.50 | 0.67 | | V/µs |
| ADJ Gain = 21 Slew Rate $R_f$ = 100kΩ, $R_g$ = 5kΩ | | Pulse on $R_{S+}$ pin, $V_{OUT}$ = $3.5V_{P-P}$ (Figure 75) | 0.50 | 0.67 | | V/µs |
| Gain = 100 -3dB Bandwidth | $BW_{-3dB}$ | $V_{RS}$+ = 12V, 0.1V, $V_{SENSE}$ = 100mV | | 110 | | kHz |
| Gain = 50 -3dB Bandwidth | | $V_{RS}$+ = 12V, 0.1V, $V_{SENSE}$ = 100mV | | 160 | | kHz |
| Gain = 20 -3dB Bandwidth | | $V_{RS}$+ = 12V, 0.1V, $V_{SENSE}$ = 100mV | | 180 | | kHz |
| ADJ, Gain = 101 (Figure 65) -3dB Bandwidth | | $V_{RS}$+ = 12V, 0.1V, $V_{SENSE}$ = 100mV, $R_f$ = 100kΩ, $R_g$ = 1kΩ | | 40 | | kHz |
| ADJ, Gain = 51 (Figure 65) -3dB Bandwidth | | $V_{RS}$+ = 12V, $V_{SENSE}$ = 100mV, $R_f$ = 100kΩ, $R_g$ = 2kΩ | | 78 | | kHz |
| | | $V_{RS}$+ = 0.1V, $V_{SENSE}$ = 100mV, $R_f$ = 100kΩ, $R_g$ = 2kΩ | | 122 | | kHz |
| ADJ, Gain = 21 (Figure 65) -3dB Bandwidth | | $V_{RS}$+ = 12V, $V_{SENSE}$ = 100mV, $R_f$ = 100kΩ, $R_g$ = 5kΩ | | 131 | | kHz |
| | | $V_{RS}$+ = 0.1V, $V_{SENSE}$ = 100mV, $R_f$ = 100kΩ, $R_g$ = 5kΩ | | 237 | | kHz |
| Output Settling Time to 1% of Final Value | $t_S$ | $V_{CC}$ = $V_{RS}$+ = 12V, $V_{OUT}$ = 10V step, $V_{SENSE}$ > 7mV | | 15 | | µs |
| | | $V_{CC}$ = $V_{RS}$+ = 0.2V, $V_{OUT}$ = 10V step, $V_{SENSE}$ > 7mV | | 20 | | µs |
| Capacitive-Load Stability | | No sustained oscillations | | 300 | | pF |
| Power-Up Time to 1% of Final Value | $t_{S\ Power-up}$ | $V_{CC}$ = $V_{RS}$+ = 12V, $V_{SENSE}$ = 100mV | | 15 | | µs |
| | | $V_{CC}$ = 12V, $V_{RS}$+ = 0.2V, $V_{SENSE}$ = 100mV | | 50 | | µs |
| Saturation Recovery Time | | $V_{CC}$ = $V_{RS}$+ = 12V, $V_{SENSE}$ = 100mV, overdrive | | 10 | | µs |

1. Compliance to datasheet limits is assured by one or more methods: production test, characterization and/or design.
2. Definition of terms:

- $V_{SENSE}A$ = $V_{SENSE}$ at 100mV
- $V_{SENSE}B$ = $V_{SENSE}$ at 20mV
- $V_{OUT}A$ = $V_{OUT}$ at $V_{SENSE}A$ = 100mV
- $V_{OUT}B$ = $V_{OUT}$ at $V_{SENSE}B$ = 20mV
- $G = GAIN = \left(\frac{V_{OUT}A - V_{OUT}B}{V_{SENSE}A - V_{SENSE}B}\right)$

chanhvinh.com



3. $V_{OS}$ is extrapolated from the gain measurement. $V_{OS} = V_{SENSE}A - \frac{V_{OUT}A}{G}$

4. % Gain Accuracy = $G_A = \left(\frac{G_{MEASURED} - G_{EXPECTED}}{G_{EXPECTED}}\right) \times 100$

5. Output Accuracy % VOA = $\left(\frac{VOUT_{MEASURED} - VOUT_{EXPECTED}}{VOUT_{EXPECTED}}\right) \times 10($, where $V_{OUT} = V_{SENSE}$ X GAIN and $V_{SENSE}$ = 100mV

# 4. Typical Performance Graphs

$V_{CC}$ = 12V, $R_L$ = 1MΩ, unless otherwise specified.

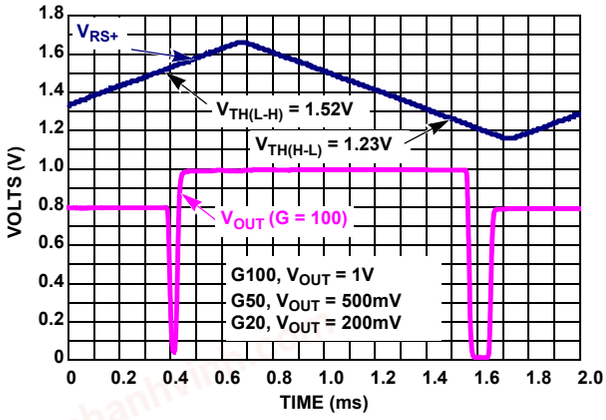


Figure 3. High-Side and Low-Side Threshold Voltage $V_{RS+(L-H)}$ and $V_{RS+(H-L)}$, $V_{SENSE}$ = 10mV

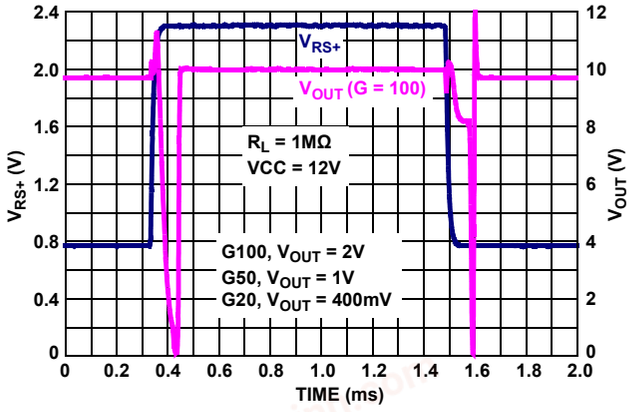


Figure 4. $V_{OUT}$ vs $V_{RS+}$, $V_{SENSE}$ = 20mV Transient Response

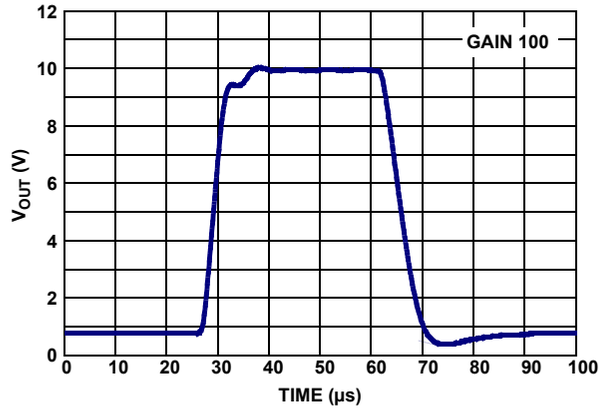


Figure 5. Large Signal Transient Response $V_{RS+}$ = 0.2V, $V_{SENSE}$ = 100mV

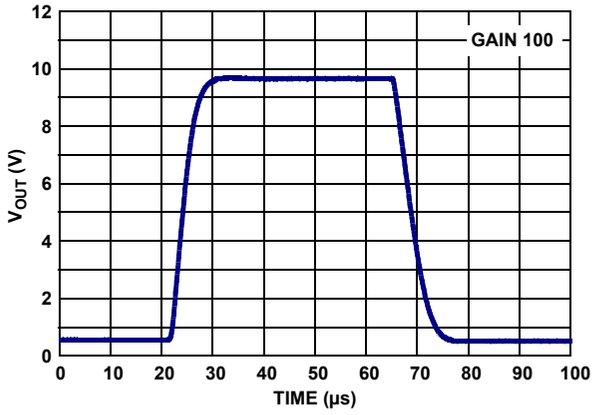


Figure 6. Large Signal Transient Response $V_{RS+}$ = 12V, $V_{SENSE}$ = 100mV

chanhvinh.com



$V_{CC}$ = 12V, $R_L$ = 1MΩ, unless otherwise specified. (Cont.)

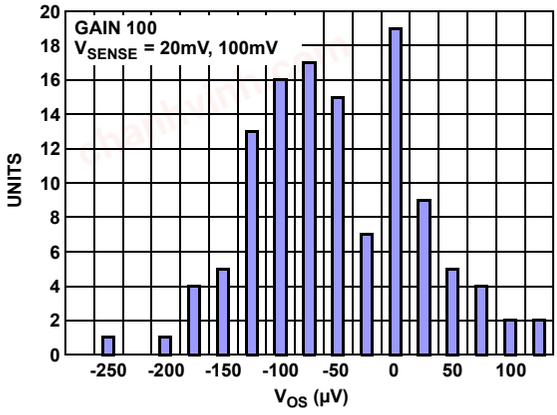


Figure 7. $V_{OS}$ (µV) Distribution at +25°C, $V_{RS+}$ = 12V, Quantity: 100

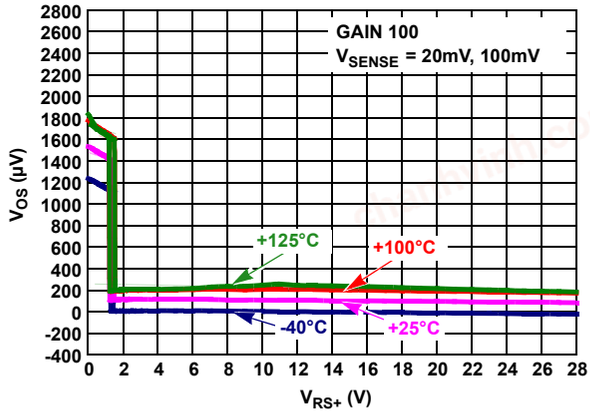


Figure 8. $V_{OS}$ vs $V_{RS+}$

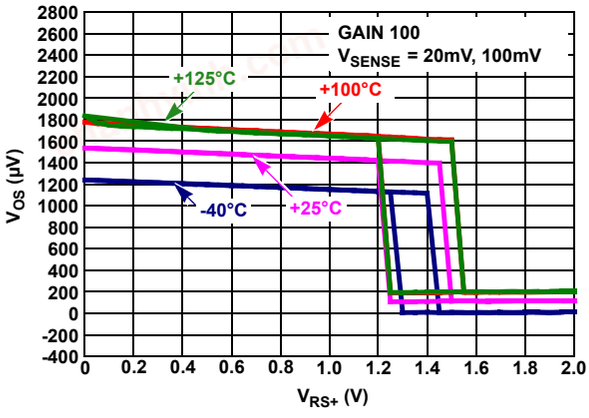


Figure 9. $V_{OS}$ vs $V_{RS+}$

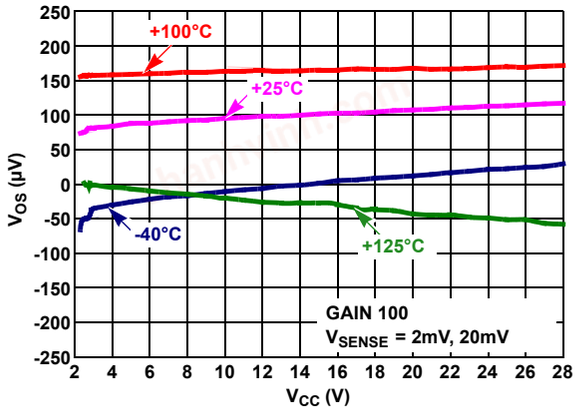


Figure 10. $V_{OS}$ vs $V_{CC}$, $V_{RS+}$= 12V

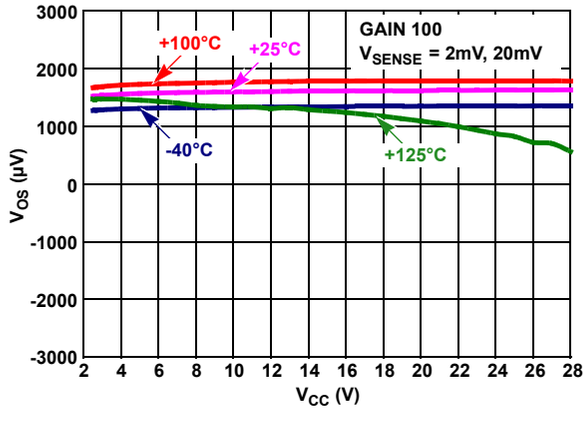


Figure 11. $V_{OS}$ vs $V_{CC}$, $V_{RS+}$ = 0.1V

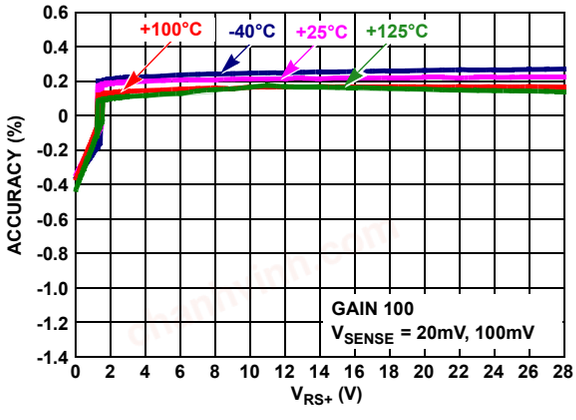


Figure 12. Gain Accuracy vs $V_{RS+}$ = 0V to 28V

chanhvinh.com



$V_{CC}$ = 12V, $R_L$ = 1MΩ, unless otherwise specified. (Cont.)

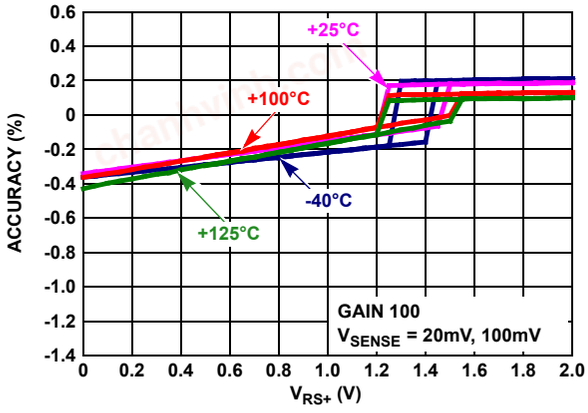


Figure 13. GAIN Accuracy vs $V_{RS+}$ = 0V to 2V

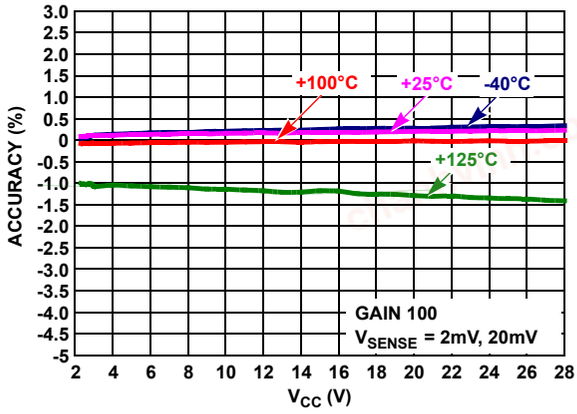


Figure 14. Gain Accuracy vs $V_{CC}$, $V_{RS+}$ = 12V

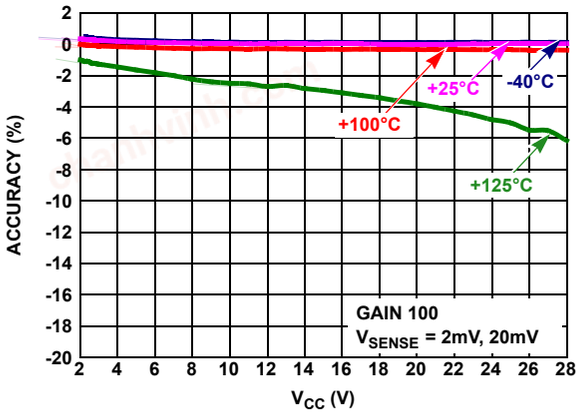


Figure 15. Gain Accuracy vs $V_{CC}$, $V_{RS+}$ = 0.1V

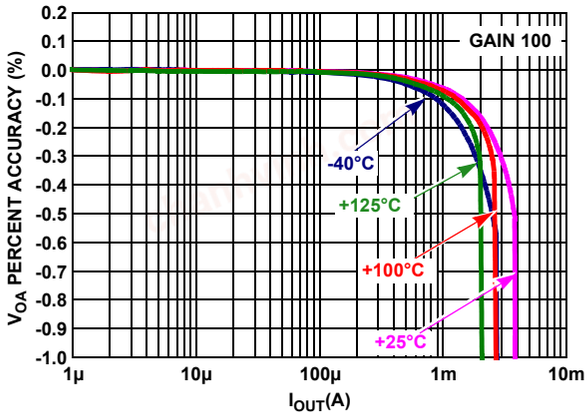


Figure 16. Normalized $V_{OA}$ vs $I_{OUT}$

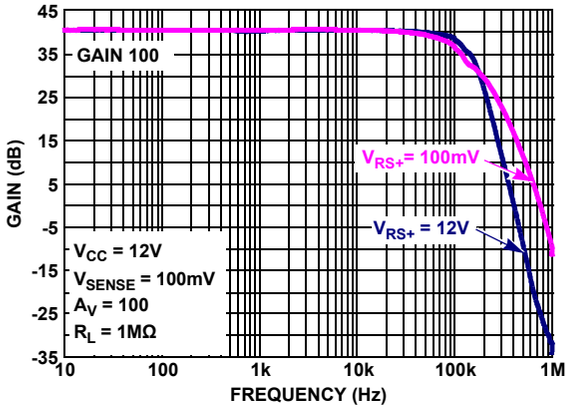


Figure 17. Gain vs Frequency $V_{RS+}$ = 100mV/12V, $V_{SENSE}$ = 100mV, $V_{OUT}$ = 50$mV_{P-P}$

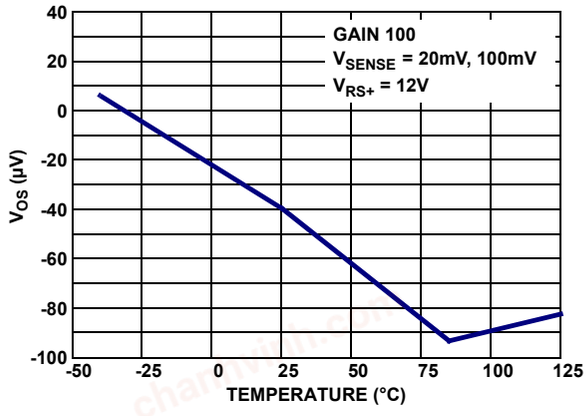


Figure 18. $V_{OS}$ (µV) vs Temperature

chanhvinh.com



$V_{CC}$ = 12V, $R_L$ = 1MΩ, unless otherwise specified. (Cont.)

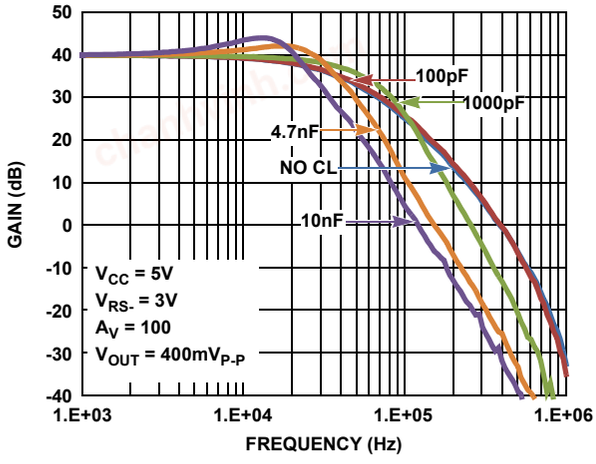


Figure 19. Capacitive Load Drive Gain vs Frequency

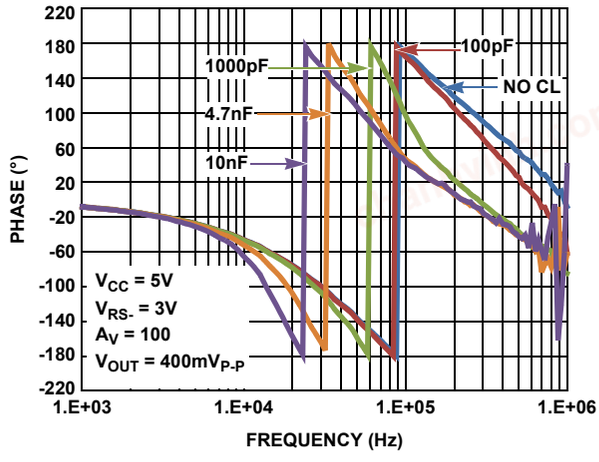


Figure 20. Capacitive Load Drive Phase vs Frequency

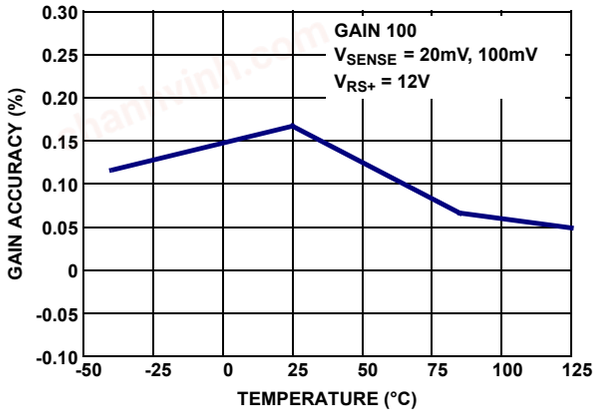


Figure 21. Gain Accuracy (%) vs Temperature

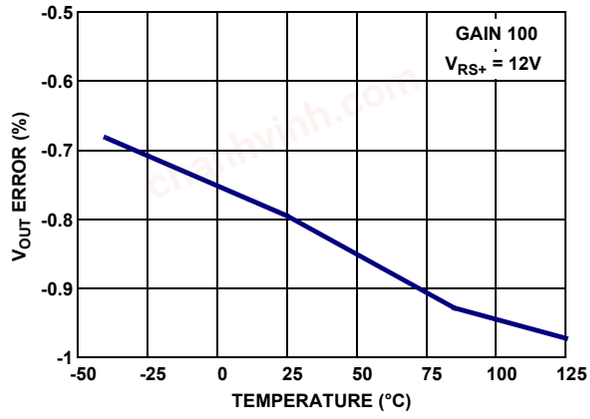


Figure 22. $V_{OUT}$ Error (%) vs Temperature

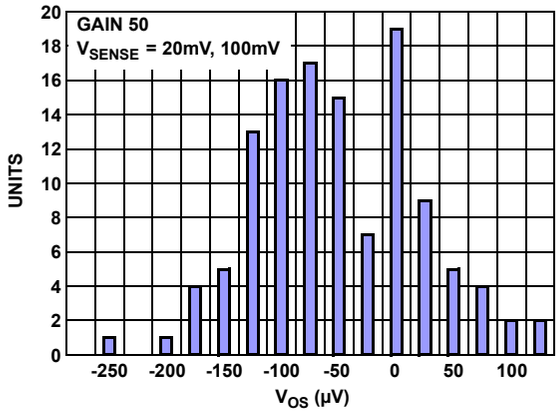


Figure 23. $V_{OS}$ (µV) DISTRIBUTION AT +25°C, $V_{RS+}$ = 12V, QUANTITY: 100

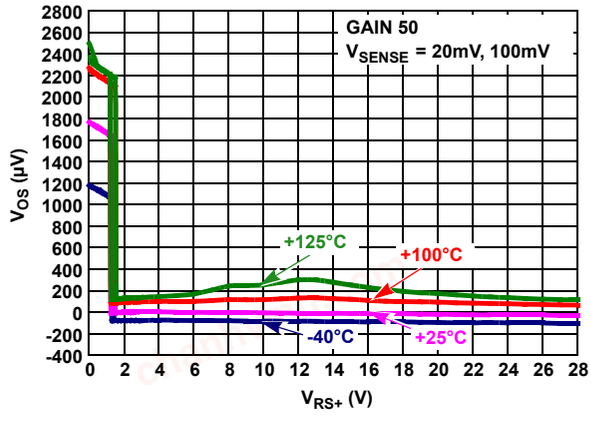


Figure 24. $V_{OS}$ vs $V_{RS+}$

chanhvinh.com



$V_{CC}$ = 12V, $R_L$ = 1MΩ, unless otherwise specified. (Cont.)

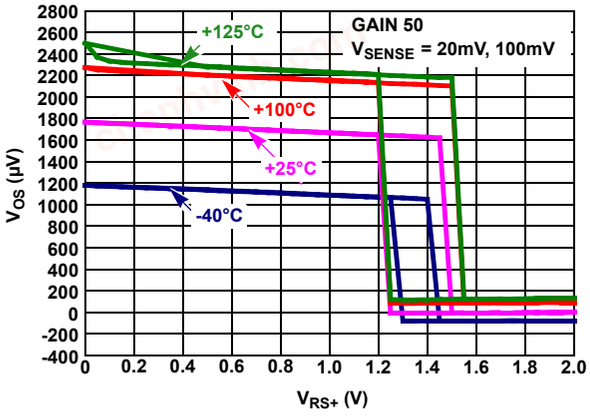


Figure 25. $V_{OS}$ vs $V_{RS+}$

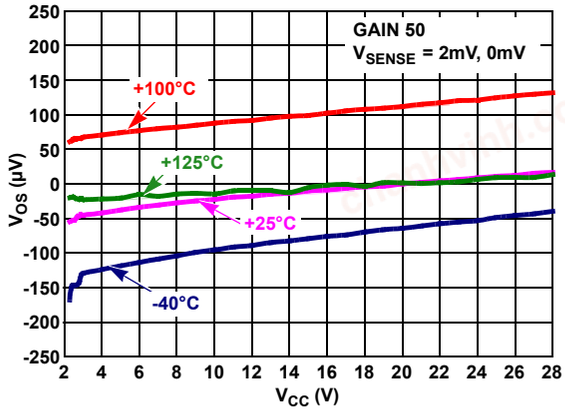


Figure 26. $V_{OS}$ vs $V_{CC}$, $V_{RS+}$ = 12V

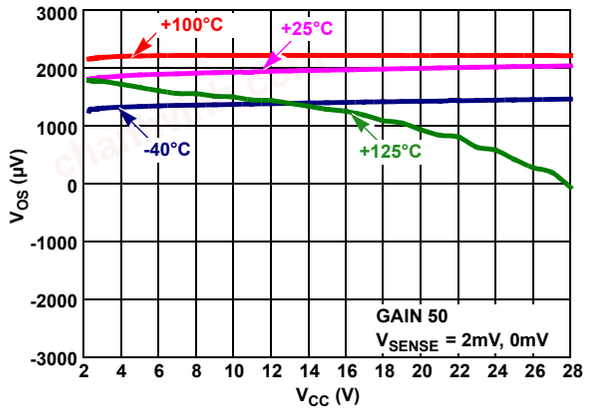


Figure 27. $V_{OS}$ vs $V_{CC}$, $V_{RS+}$ = $V_{RS+}$ = 0.1V

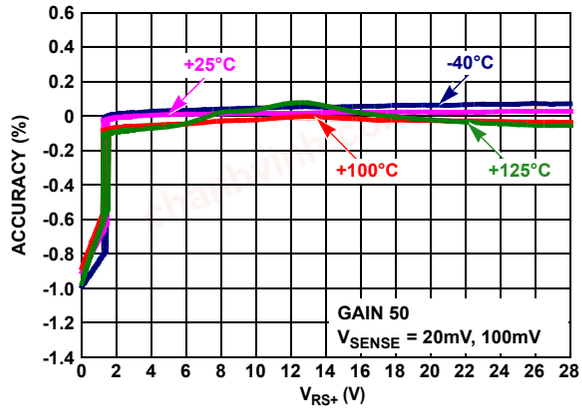


Figure 28. Gain Accuracy vs $V_{RS+}$ = 0V to 28V

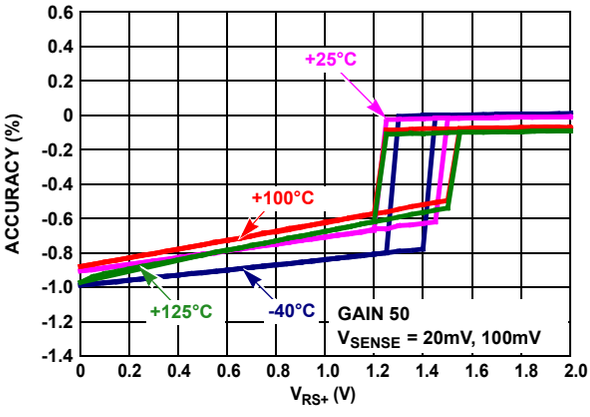


Figure 29. Gain Accuracy vs $V_{RS+}$ = 0V to 2V

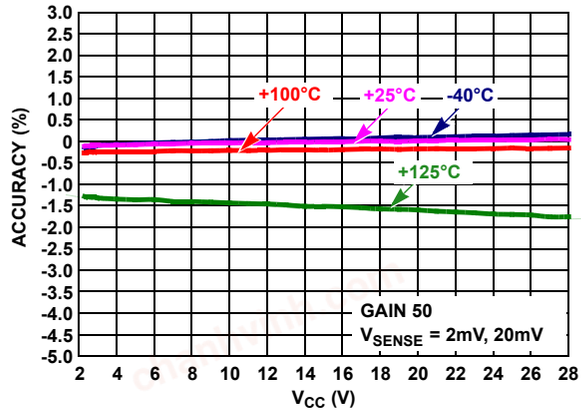


Figure 30. Gain Accuracy vs $V_{CC}$, High-Side

chanhvinh.com



$V_{CC}$ = 12V, $R_L$ = 1MΩ, unless otherwise specified. (Cont.)

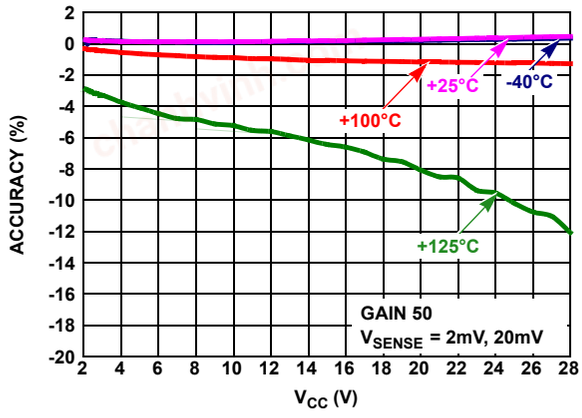


Figure 31. Gain Accuracy vs $V_{CC}$, Low-Side

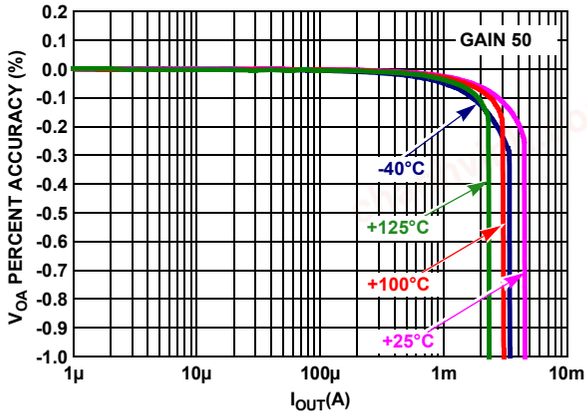


Figure 32. Normalized $V_{OA}$ vs $I_{OUT}$

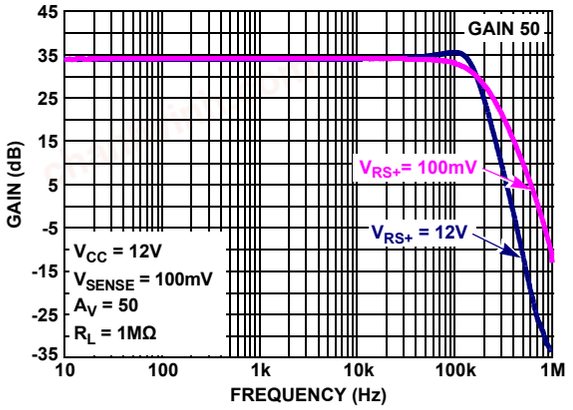


Figure 33. Gain vs Frequency $V_{RS+}$ = 100mV/12V, $V_{SENSE}$ = 100mV, $V_{OUT}$ = 50$mV_{P-P}$

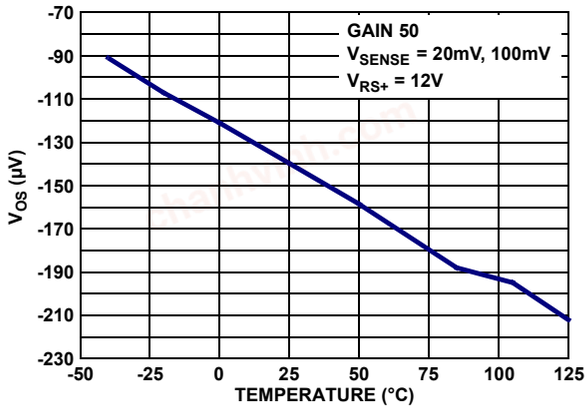


Figure 34. $V_{OS}$ (µV) vs Temperature

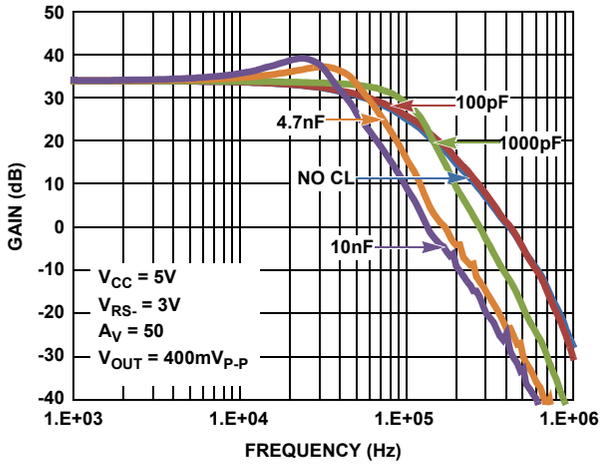


Figure 35. Capacitive Load Drive Gain vs Frequency

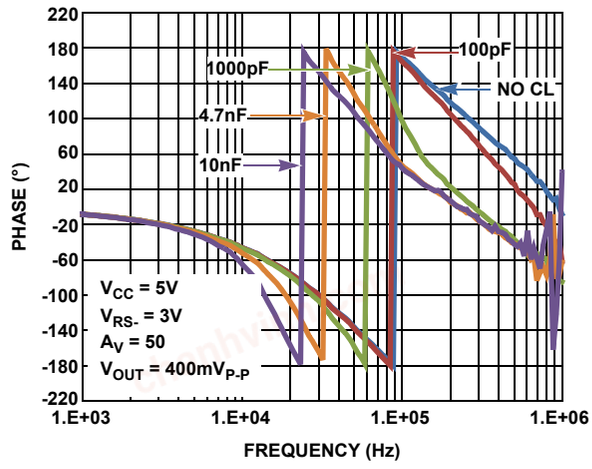


Figure 36. Capacitive Load Drive Phase vs Frequency

chanhvinh.com



$V_{CC}$ = 12V, $R_L$ = 1MΩ, unless otherwise specified. (Cont.)

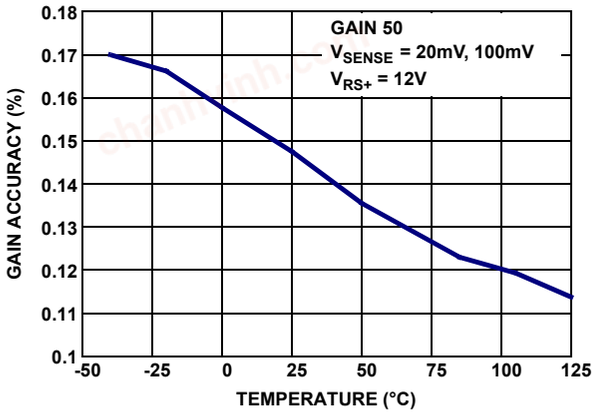


Figure 37. Gain Accuracy (%) vs Temperature

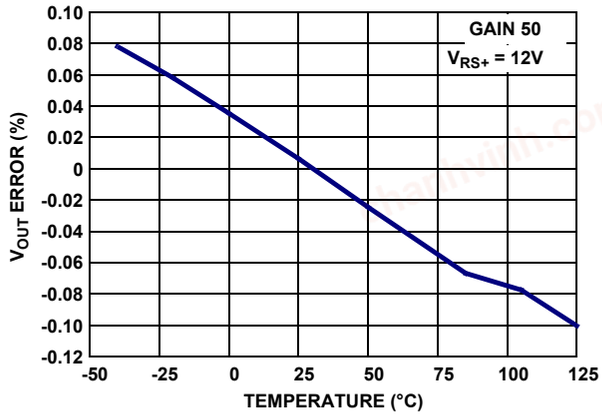


Figure 38. $V_{OUT}$ Error (%) vs Temperature

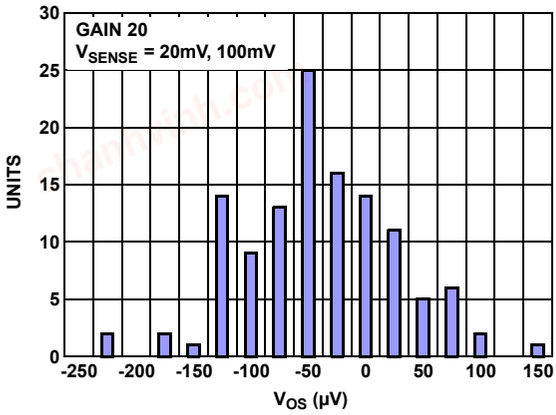


Figure 39. $V_{OS}$ (µV) Distribution at +25°C, $V_{RS+}$ = 12V, Quantity: 100

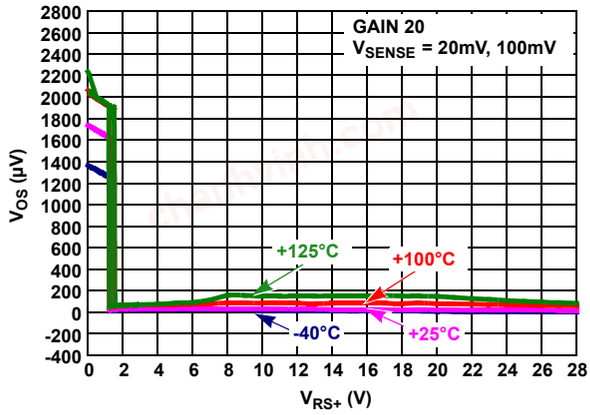


Figure 40. $V_{OS}$ vs $V_{RS+}$

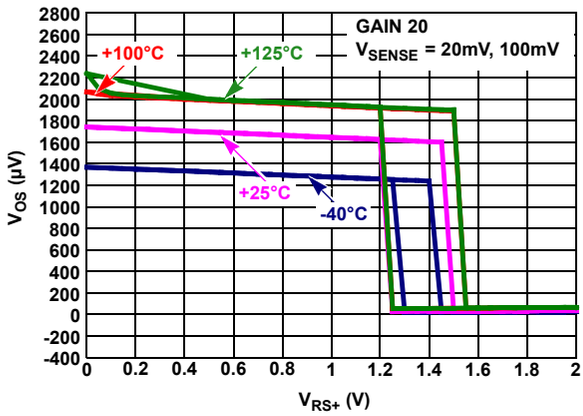


Figure 41. $V_{OS}$ vs $V_{RS+}$

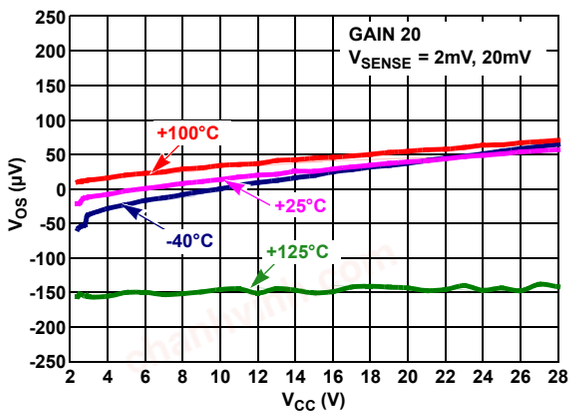


Figure 42. $V_{OS}$ vs $V_{CC}$, $V_{RS+}$ = 12V

chanhvinh.com



$V_{CC}$ = 12V, $R_L$ = 1MΩ, unless otherwise specified. (Cont.)

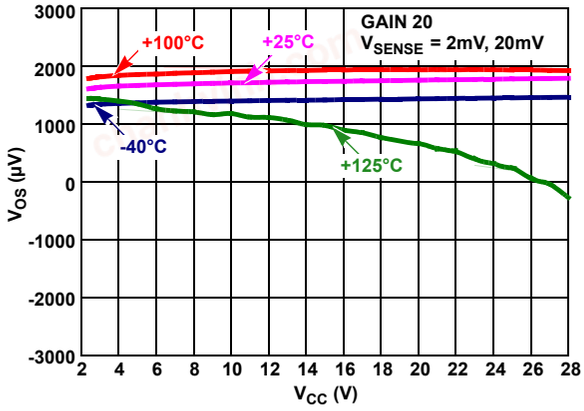


Figure 43. $V_{OS}$ vs $V_{CC}$, $V_{RS+}$ = 0.1V

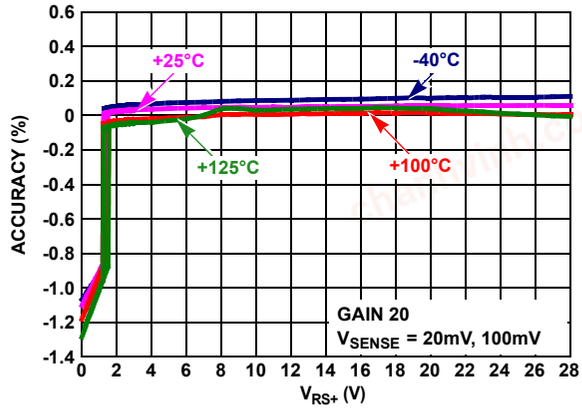


Figure 44. Gain Accuracy vs $V_{RS+}$ = 0V to 28V

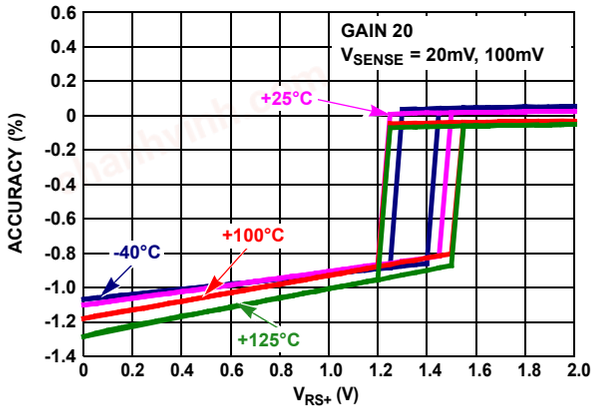


Figure 45. Gain Accuracy vs $V_{RS+}$ = 0V to 2V

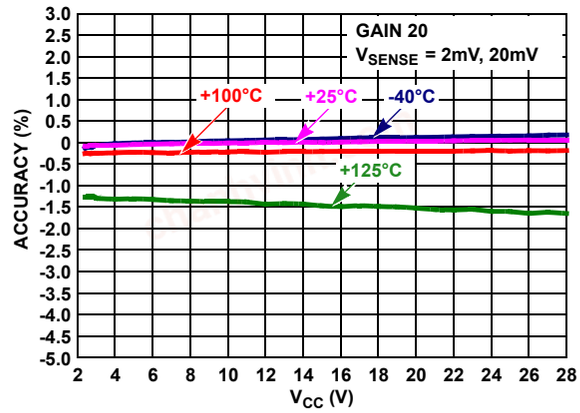


Figure 46. Gain Accuracy vs $V_{CC}$, High-Side

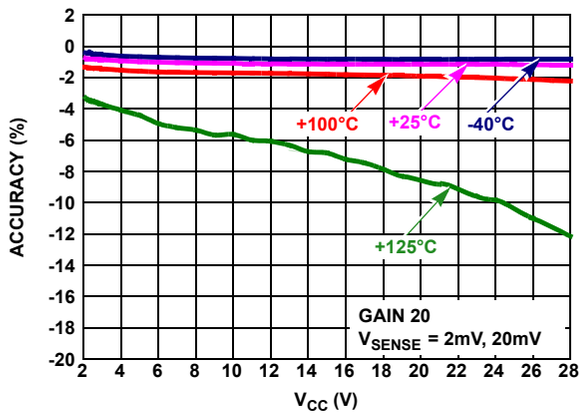


Figure 47. Gain Accuracy vs $V_{CC}$, Low-Side

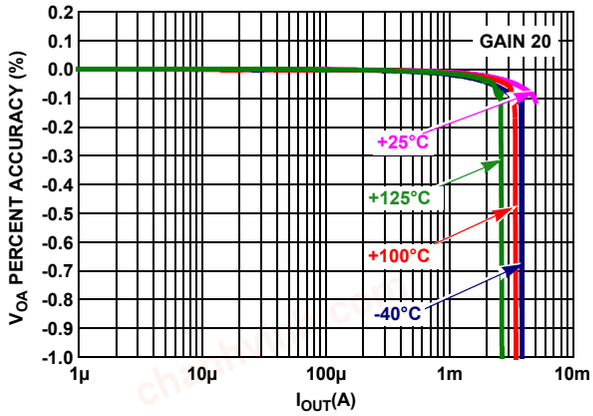


Figure 48. Normalized $V_{OA}$ vs $I_{OUT}$

chanhvinh.com



$V_{CC}$ = 12V, $R_L$ = 1MΩ, unless otherwise specified. (Cont.)

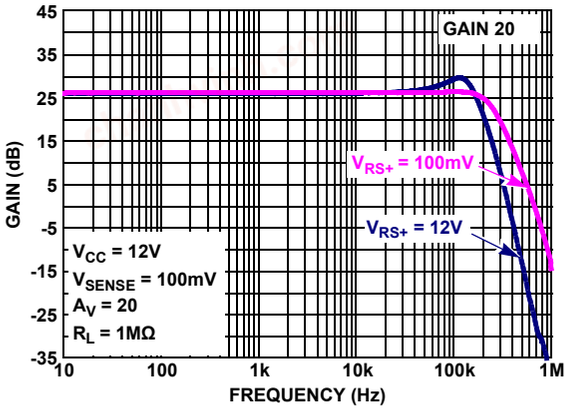


Figure 49. Gain vs Frequency $V_{RS+}$ = 100mV/12V, $V_{SENSE}$ = 100mV, $V_{OUT}$ = 50m$V_{P-P}$

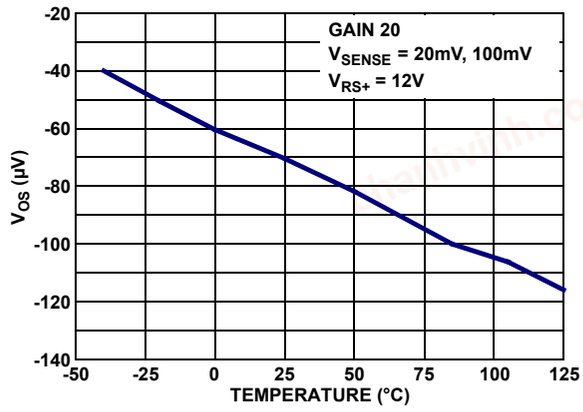


Figure 50. $V_{OS}$ (µV) vs Temperature

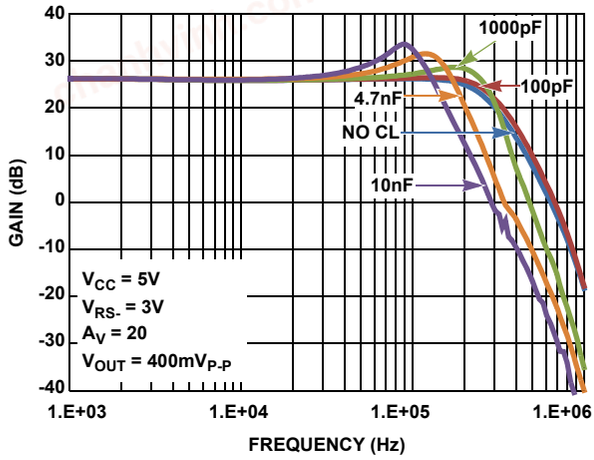


Figure 51. Capacitive Load Drive Gain vs Frequency

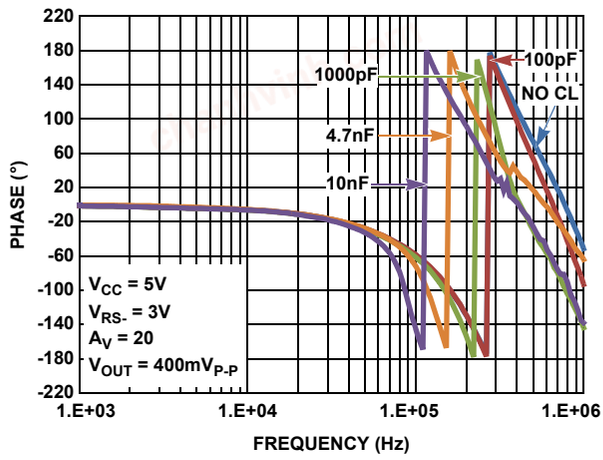


Figure 52. Capacitive Load Drive Phase vs Frequency

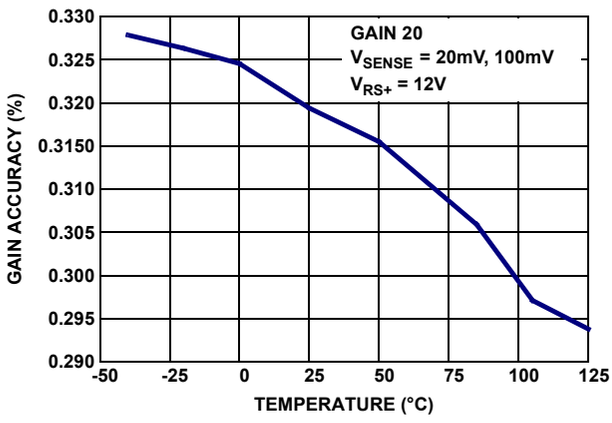


Figure 53. Gain Accuracy (%) vs Temperature

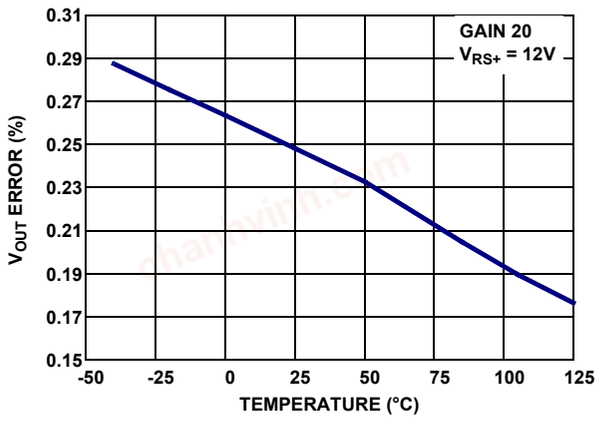


Figure 54. $V_{OUT}$ Error (%) vs Temperature

chanhvinh.com



$V_{CC}$ = 12V, $R_L$ = 1MΩ, unless otherwise specified. (Cont.)

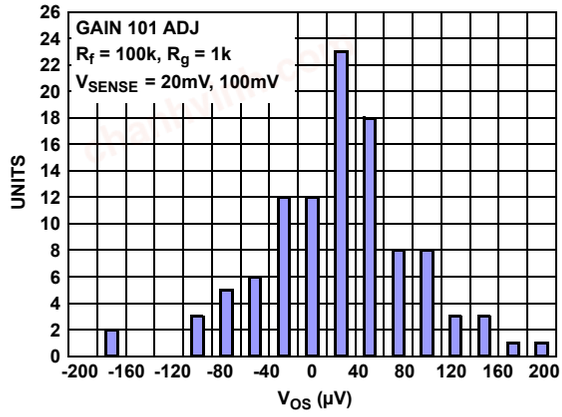


Figure 55. $V_{OS}$ (µV) Distribution at +25°C, $V_{RS+}$ = 12V, Quantity: 100

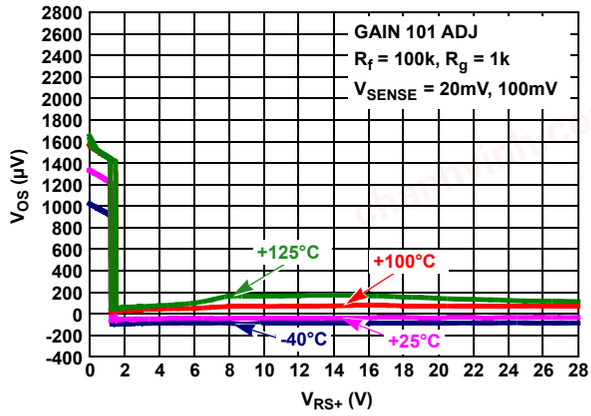


Figure 56. $V_{OS}$ vs $V_{RS+}$

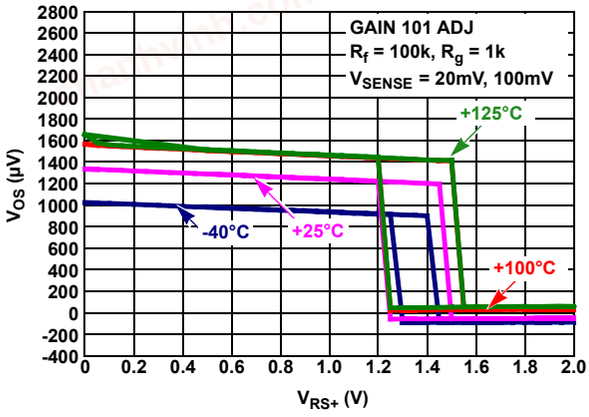


Figure 57. $V_{OS}$ vs $V_{RS+}$

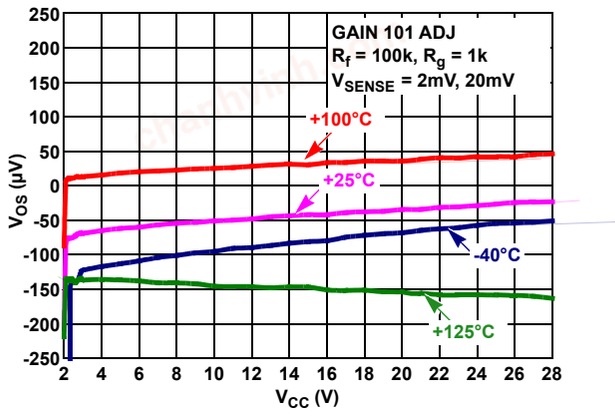


Figure 58. $V_{OS}$ vs $V_{CC}$, High-Side

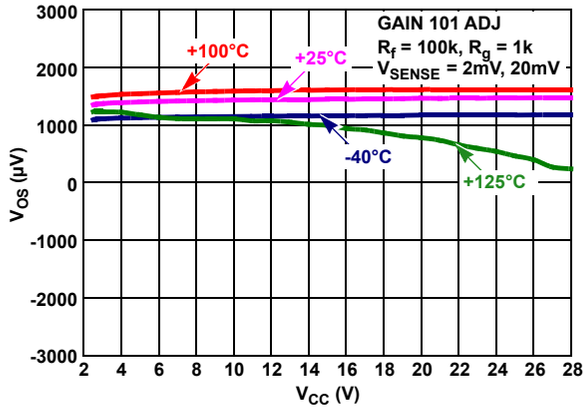


Figure 59. $V_{OS}$ vs $V_{CC}$, Low-Side

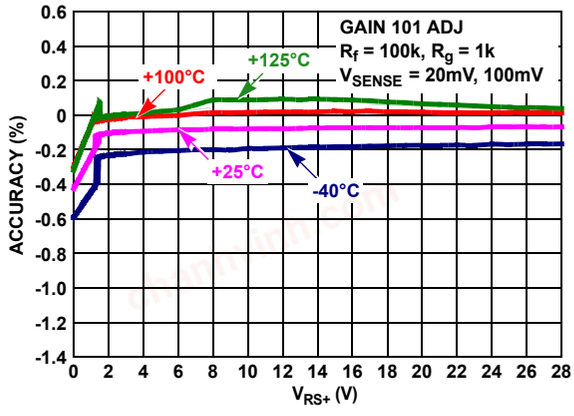


Figure 60. Gain Accuracy vs $V_{RS+}$ = 0V to 28V

chanhvinh.com



$V_{CC}$ = 12V, $R_L$ = 1MΩ, unless otherwise specified. (Cont.)

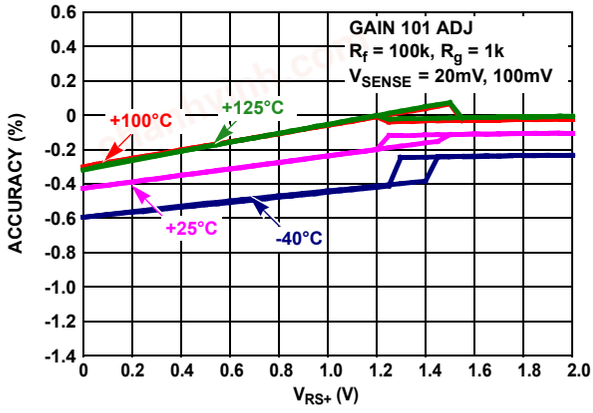


Figure 61. Gain Accuracy vs $V_{RS+}$ = 0V to 2V

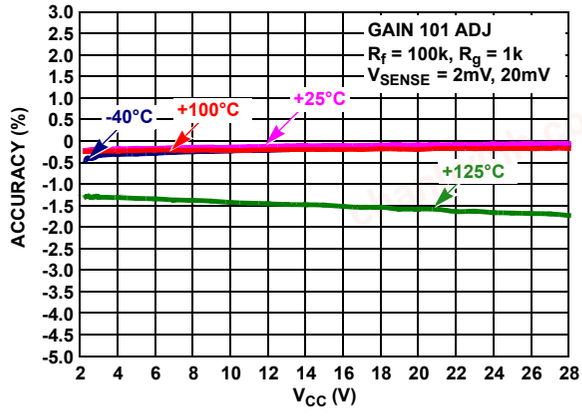


Figure 62. Gain Accuracy vs $V_{CC}$, $V_{RS+}$ = 12V

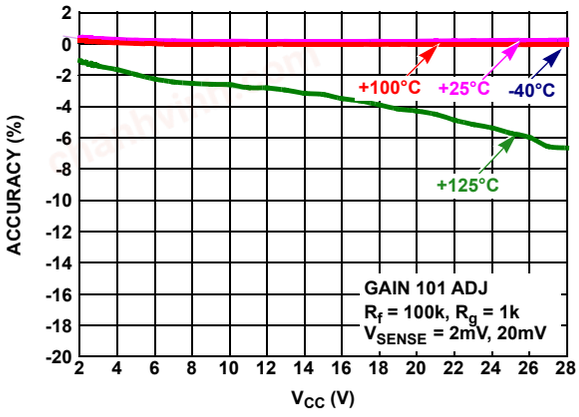


Figure 63. Gain Accuracy vs $V_{CC}$, $V_{RS+}$ = 0.1V

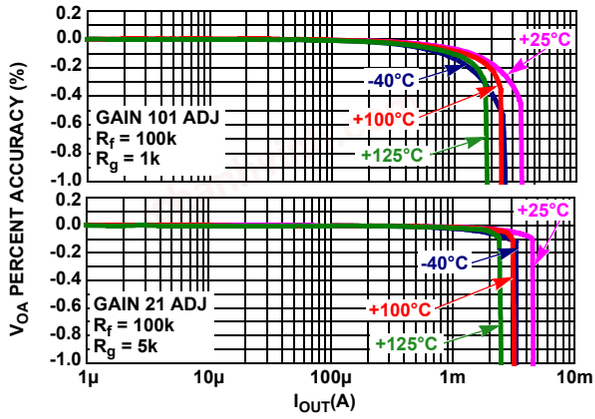


Figure 64. Normalized $V_{OA}$ vs $I_{OUT}$

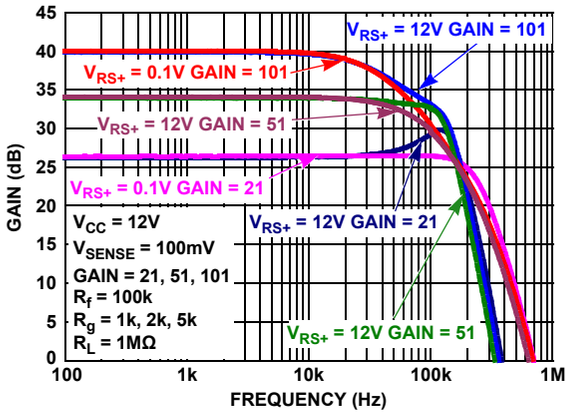


Figure 65. Gain vs Frequency $V_{RS+}$ = 100mV/12V, $V_{SENSE}$ = 100mV, $V_{OUT}$ = 50$mV_{P-P}$

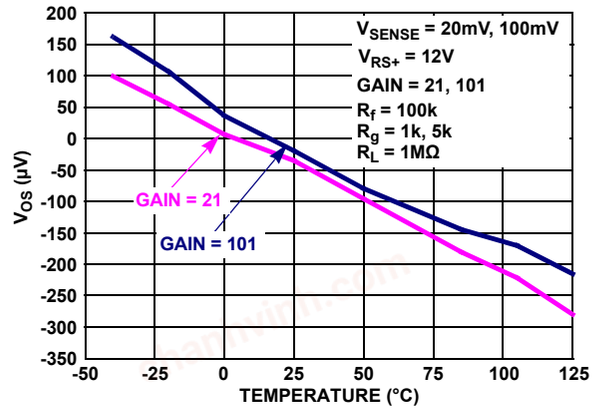


Figure 66. $V_{OS}$ (µV) vs Temperature

chanhvinh.com



$V_{CC}$ = 12V, $R_L$ = 1MΩ, unless otherwise specified. (Cont.)

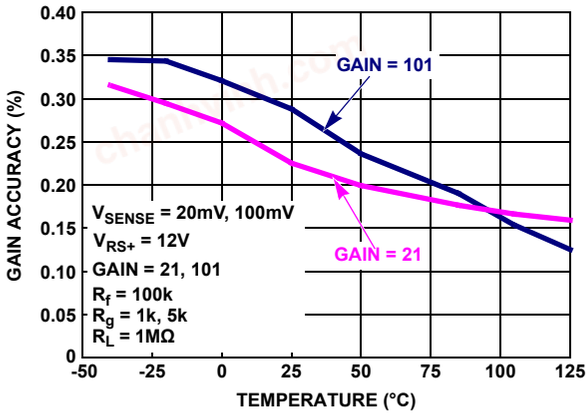


Figure 67. Gain Accuracy (%) vs Temperature

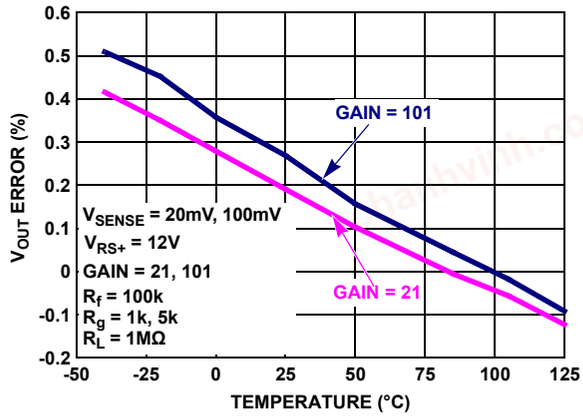


Figure 68. $V_{OUT}$ Error (%) vs Temperature

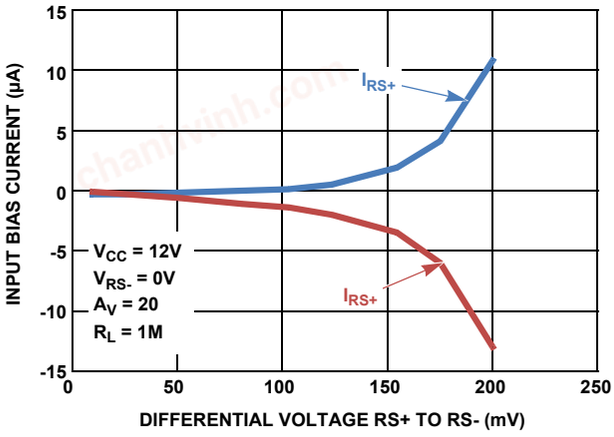


Figure 69. Low-Side Current Sensing Input Bias Currents

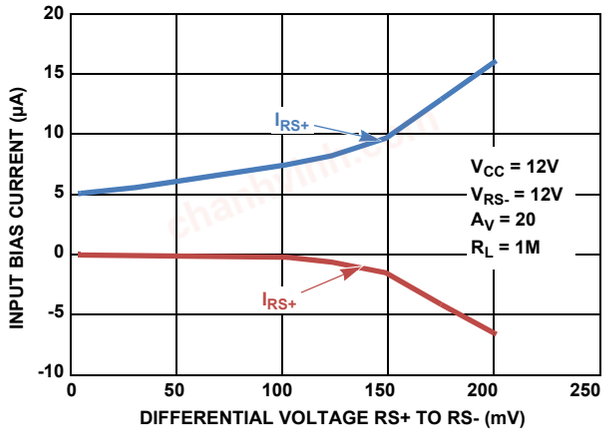


Figure 70. High-Side Current Sensing Input Bias Currents

chanhvinh.com



## 4.1 Test Circuits and Wavefomrs

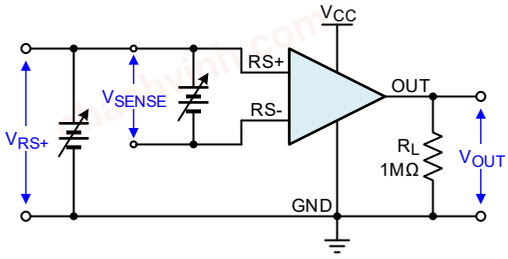


Figure 71. $I_{CC}$, $V_{OS}$, $V_{OA}$, CMRR, PSRR, Gain Accuracy

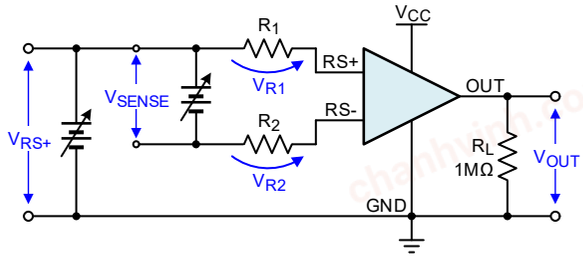


Figure 72. Input Bias Current, Leakage Current

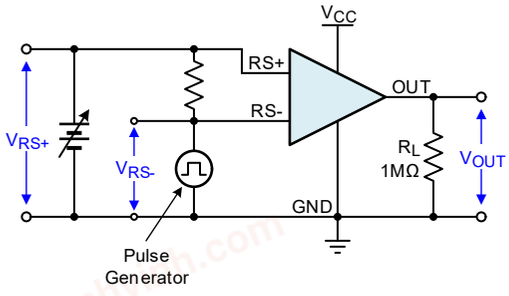


Figure 73. $t_S$, Saturation Recovery Time

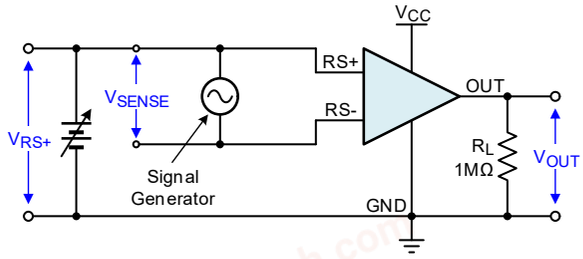


Figure 74. Gain vs Frequency

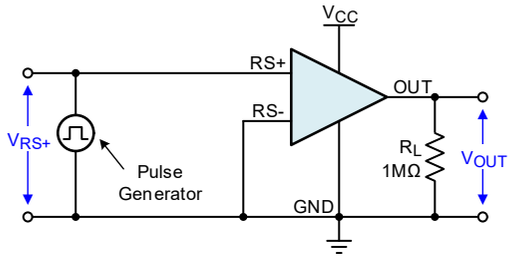


Figure 75. Slew Rate

chanhvinh.com



# 5. Applications Information

## 5.1 Functional Description

The ISL28006-20, ISL28006-50 and ISL28006-100 are single supply, unidirectional current sense amplifiers with fixed gains of 20V/V, 50V/V and 100V/V respectively. The ISL28006-ADJ is single supply, unidirectional current sense amplifier with an adjustable gain using external resistors (see Figure 79). The ISL28006-ADJ is stable for gains of 20 and higher.

The ISL28006 is a 2-stage amplifier. Figure 76 shows the active circuitry for high-side current sense applications where the sense voltage is between 1.35V to 28V. Figure 77 shows the active circuitry for ground sense applications where the sense voltage is between 0V to 1.35V.

The first stage is a bi-level trans-conductance amp and level translator. The gm stage converts the low voltage drop ($V_{SENSE}$) sensed across an external milli-ohm sense resistor, to a current (at gm = 21.3µA/V). The trans-conductance amplifier forces a current through $R_1$ resulting to a voltage drop across $R_1$ that is equal to the sense voltage ($V_{SENSE}$). The current through $R_1$ is mirrored across $R_5$ creating a ground-referenced voltage at the input of the second amplifier equal to $V_{SENSE}$.

The second stage is responsible for the overall gain and frequency response performance of the device. The fixed gains (20, 50, 100) are set with internal resistors $R_f$ and $R_g$. The variable gain (ADJ) has an additional FB pin and uses external gain resistors to set the gain of the output. For the fixed gain amps the only external component needed is a current sense resistor (typically 0.001Ω to 0.01Ω, 1W to 2W).

The transfer function for the fixed gain parts is given in Equation 1.

**(EQ. 1)** $$V_{OUT} = GAIN \times (I_S R_S + V_{OS})$$

The transfer function for the adjustable gain part is given in Equation 2 where $I_S R_S$ is the product of the load current and the sense resistor and is equal to $V_{SENSE}$.

**(EQ. 2)** $$V_{OUT} = \left(1 + \frac{R_F}{R_G}\right)(I_S R_S + V_{OS})$$

When the sensed input voltage is >1.35V, the $gm_{HI}$ amplifier path is selected and the input gm stage derives its ~2.86µA supply current from the input source through the RS+ terminal. When the sense voltage at $R_S$+ drops below the 1.35V threshold, the $gm_{LO}$ amplifier is enabled for Low Side current sensing. The $gm_{LO}$ input bias current reverses, flowing out of the RS- pin. Since the $gm_{LO}$ amplifier is sensing voltage around ground, it cannot source current to R5. A current mirror referenced off $V_{CC}$ supplies the current to the second stage for generating a ground referenced output voltage. See Figure 69 and Figure 70 for typical input bias currents for high-side and low-side current sensing.

chanhvinh.com



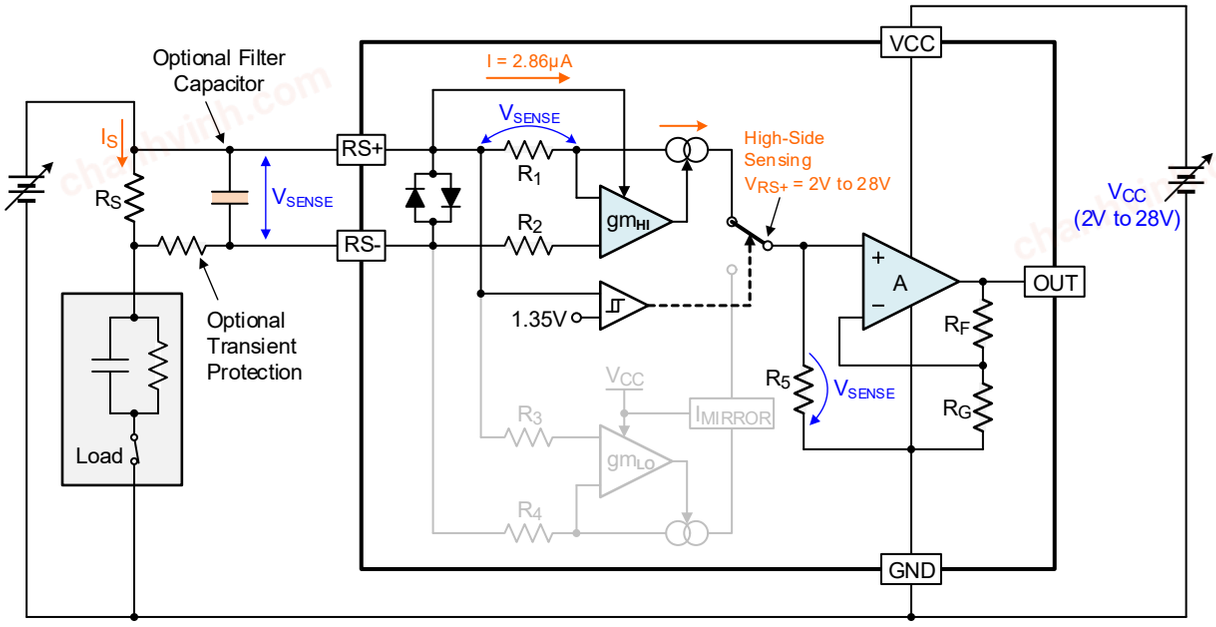


**Figure 76. High-Side Current Detection**

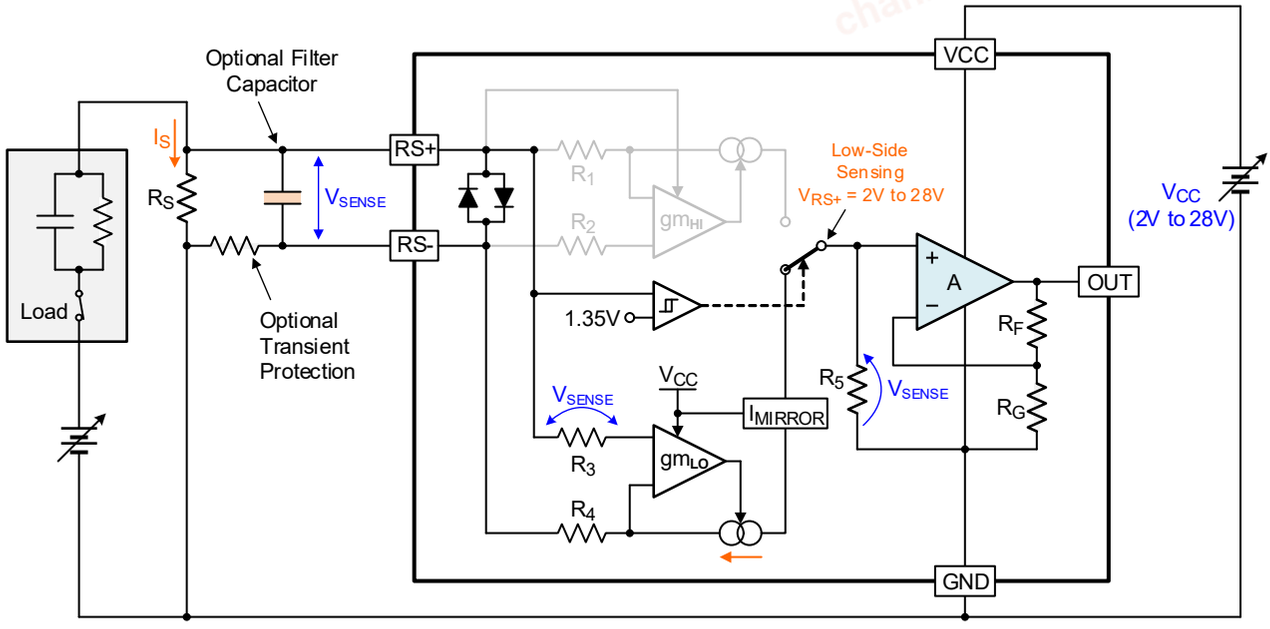


**Figure 77. Low-Side Current Detection**

chanhvinh.com



## 5.2 Hysteretic Comparator

The input trans-conductance amps are under control of a hysteretic comparator operating from the incoming source voltage on the $R_{S+}$ pin (Figure 78). The comparator monitors the voltage on $R_{S+}$ and switches the sense amplifier from the low-side gm amp to the high-side gm amplifier whenever the input voltage at $R_{S+}$ increases above the 1.35V threshold. Conversely, a decreasing voltage on the $R_{S+}$ pin, causes the hysteric comparator to switch from the high-side gm amp to the low-side gm amp as the voltage decreases below 1.35V. It is that low-side sense gm amplifier that gives the ISL28006 the proprietary ability to sense current all the way to 0V. Negative voltages on the $R_{S+}$ or $R_{S-}$ are beyond the sensing voltage range of this amplifier.

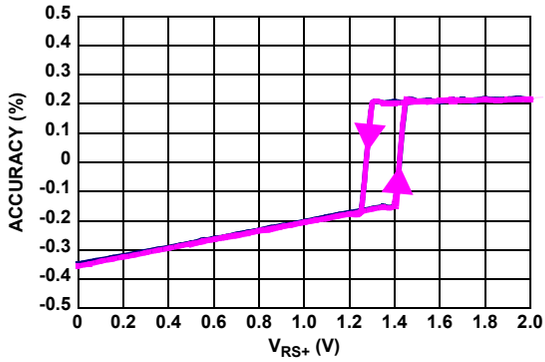


**Figure 78. Gain Accuracy vs $V_{RS+}$ = 0V to 2V**

## 5.3 Typical Application Circuit

Figure 79 shows the basic application circuit and optional protection components for switched-load applications. For applications where the load and the power source is permanently connected, only an external sense resistor is needed. For applications where fast transients are caused by hot plugging the source or load, external protection components may be needed. The external current limiting resistor ($R_P$) in Figure 79 may be required to limit the peak current through the internal ESD diodes to <20mA. This condition can occur in applications that experience high levels of in-rush current causing high peak voltages that can damage the internal ESD diodes. An $R_P$ resistor value of 100Ω provides protection for a 2V transient with the maximum of 20mA flowing through the input while adding only an additional 13µV (worse case over-temperature) of $V_{OS}$. See Equation 3:

**(EQ. 3)** $$((R_P \times I_{RS-}) = (100\Omega \times 130nA) = 13\mu V)$$

Switching applications can generate voltage spikes that can overdrive the amplifier input and drive the output of the amplifier into the rails, resulting in a long overload recover time. Capacitors $C_M$ and $C_D$ filter the common mode and differential voltage spikes.

chanhvinh.com



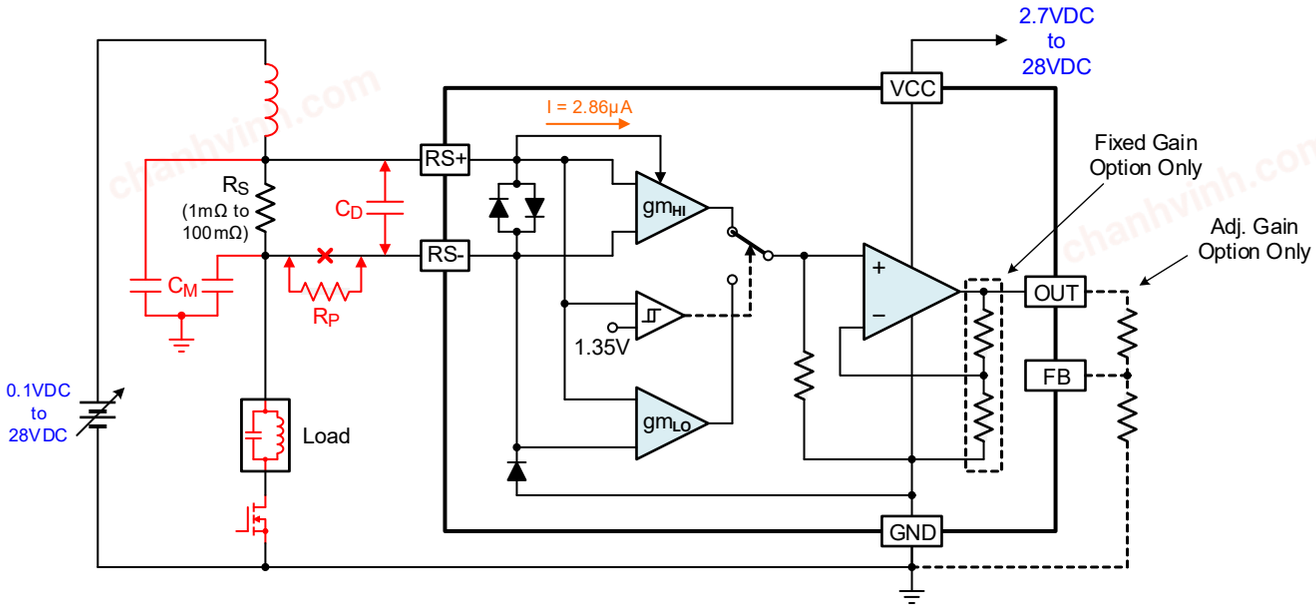


**Figure 79. Typical Application Circuit**

## 5.4 Error Sources

There are 3 dominant error sources: gain error, input offset voltage error and Kelvin voltage error (see Figure 80). The gain error is dominated by the internal resistance matching tolerances. The remaining errors appear as sense voltage errors at the input to the amplifier. They are $V_{OS}$ of the amplifier and Kelvin voltage errors. If the transient protection resistor is added, an additional $V_{OS}$ error can result from the IxR voltage due to input bias current. The limiting resistor should only be added to the $R_{S-}$ input, due to the high-side gm amplifier ($gm_{HI}$) sinking several micro amps of current through the $R_{S+}$ pin.

# 6. Layout Guidelines

## 6.1 The Kelvin Connected Sense Resistor

The source of Kelvin voltage errors is illustrated in Figure 80. The resistance of 1/2 Oz copper is ~1mΩ per square with a TC of ~3900ppm/°C (0.39%/°C). When you compare this unwanted parasitic resistance with the total 1mΩ to 10mΩ resistance of the sense resistor, it is easy to see why the sense connection must be chosen very carefully. For example, consider a maximum current of 20A through a 0.005Ω sense resistor, generating a $V_{SENSE}$ = 0.1 and a full scale output voltage of 10V (G = 100). Two side contacts of only 0.25 square per contact puts the $V_{SENSE}$ input about 0.5 x 1mΩ away from the resistor end capacitor. If only 10A the 20A total current flows through the kelvin path to the resistor, you get an error voltage of 10mV (10A x 0.5sq x 0.001Ω/sq. = 10mV) added to the 100mV sense voltage for a sense voltage error of 10% (0.110V-0.1)/0.1V) x 100.

chanhvinh.com



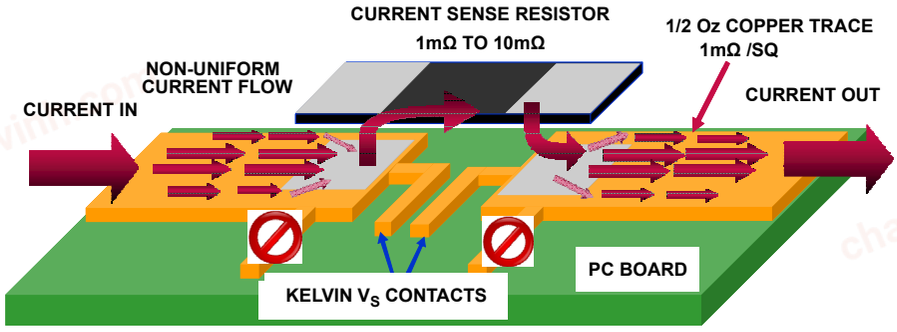


**Figure 80. PC Board Current Sense Kelvin Connection**

## 6.2 Overall Accuracy ($V_{OA}$ %)

$V_{OA}$ is defined as the total output accuracy Referred-to-Output (RTO). The output accuracy contains all offset and gain errors, at a single output voltage. Use Equation 4 to calculate the % total output accuracy where $V_{OUT}$ Actual = $V_{SENSE}$ x GAIN.

**(EQ. 4)** $$V_{OA} = 100 \times \left( \frac{V_{OUT}\text{actual} - V_{OUT}\text{expected}}{V_{OUT}\text{expected}} \right)$$

Example: Gain = 100, for 100mV $V_{SENSE}$ input we measure 10.1V. The overall accuracy ($V_{OA}$) is 1% as shown in Equation 5.

**(EQ. 5)** $$V_{OA} = 100 \times \left( \frac{10.1 - 10}{10} \right) = 1\%$$

## 6.3 Power Dissipation

It is possible to exceed the +150°C maximum junction temperatures under certain load and power supply conditions. It is therefore important to calculate the maximum junction temperature ($T_{JMAX}$) for all applications to determine if power supply voltages, load conditions, or package type need to be modified to remain in the safe operating area. These parameters are related using Equation 6:

**(EQ. 6)** $$T_{JMAX} = T_{MAX} + \theta_{JA} x PD_{MAXTOTAL}$$

where:

- $P_{DMAXTOTAL}$ is the sum of the maximum power dissipation of each amplifier in the package ($PD_{MAX}$)
- $PD_{MAX}$ for each amplifier can be calculated using Equation 7:

**(EQ. 7)** $$PD_{MAX} = V_S \times I_{qMAX} + (V_S - V_{OUTMAX}) \times \frac{V_{OUTMAX}}{R_L}$$

where:

- $T_{MAX}$ = Maximum ambient temperature
- $\theta_{JA}$ = Thermal resistance of the package
- $PD_{MAX}$ = Maximum power dissipation of 1 amplifier
- $V_{CC}$ = Total supply voltage
- $I_{qMAX}$ = Maximum quiescent supply current of 1 amplifier
- $V_{OUTMAX}$ = Maximum output voltage swing of the application
- $R_L$ = Load resistance

chanhvinh.com



# 7. Package Outline Drawings

For the most recent package outline drawing, see P5.064A.

P5.064A
5 Lead Small Outline Transistor Plastic Package
Rev 0, 2/10

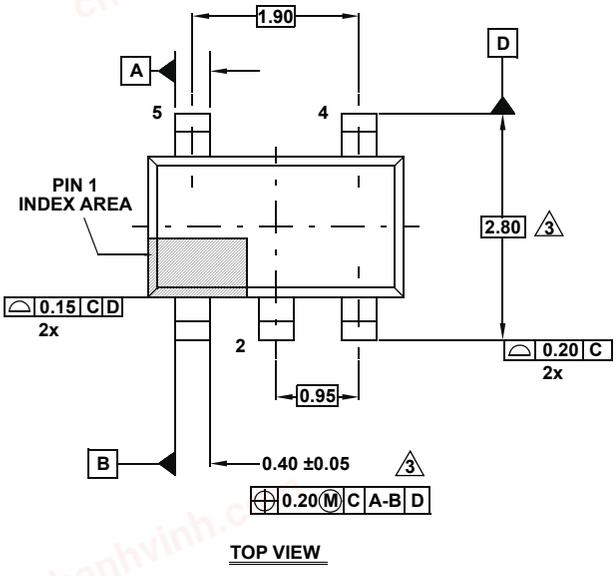


TOP VIEW

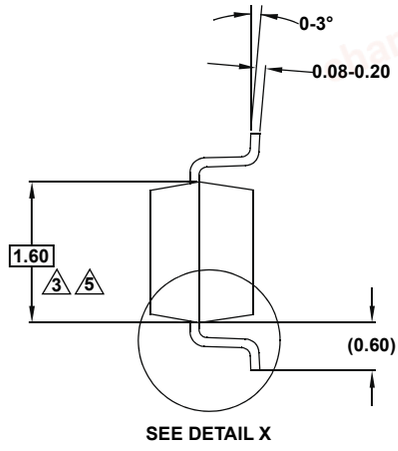


SEE DETAIL X

END VIEW

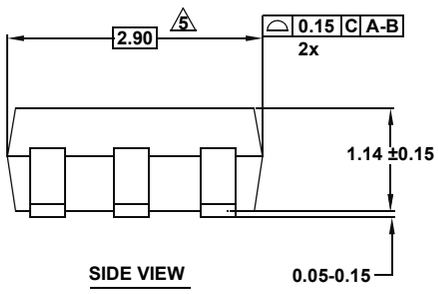


SIDE VIEW

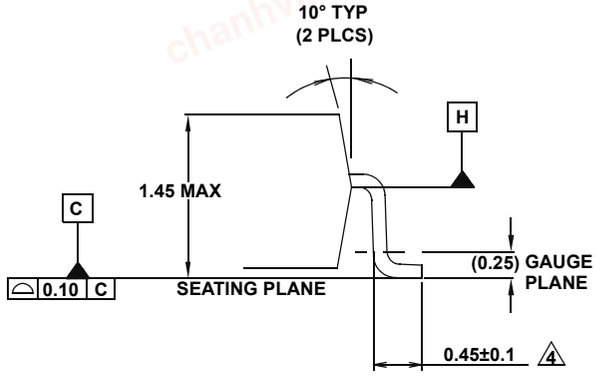


DETAIL "X"

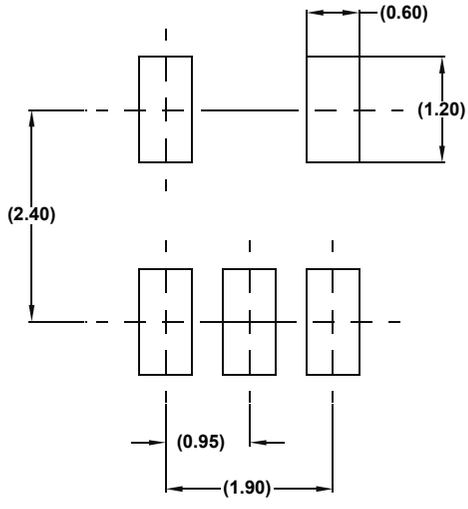


TYPICAL RECOMMENDED LAND PATTERN

NOTES:

1. Dimensions are in millimeters.
   Dimensions in ( ) for Reference Only.
2. Dimensioning and tolerancing conform to ASME Y14.5M-1994.
3. Dimension is exclusive of mold flash, protrusions or gate burrs.
4. Foot length is measured at reference to guage plane.
5. This dimension is measured at Datum “H”.
6. Package conforms to JEDEC MO-178AA.

chanhvinh.com



For the most recent package outline drawing, see P6.064.

P6.064
6 Lead Small Outline Transistor Plastic Package
Rev 4, 2/10

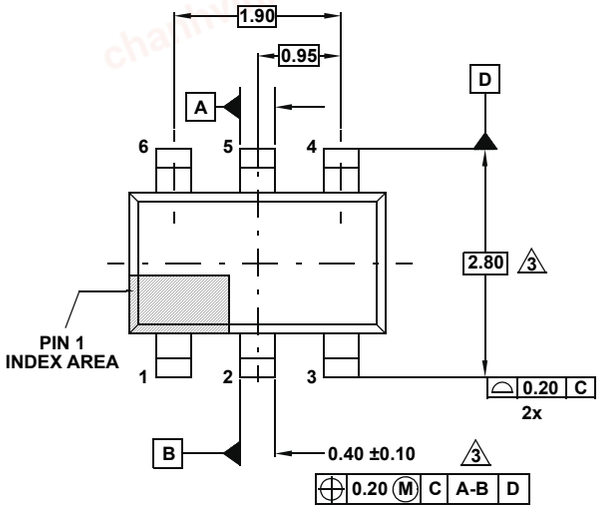


TOP VIEW

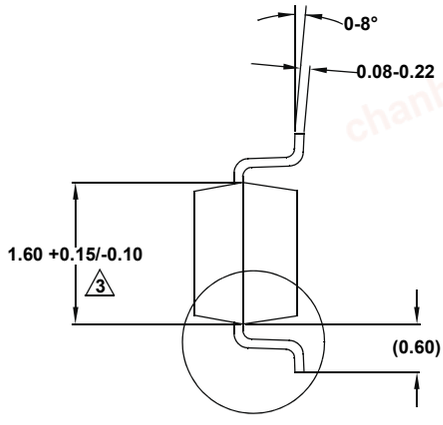


SEE DETAIL X

END VIEW

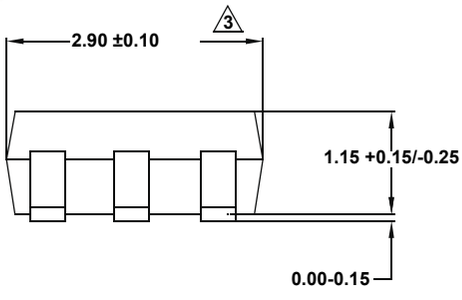


SIDE VIEW

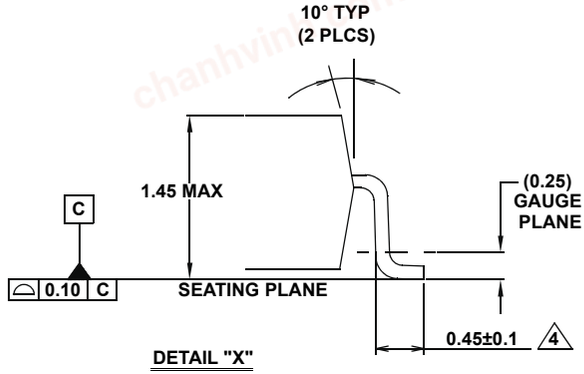


DETAIL "X"

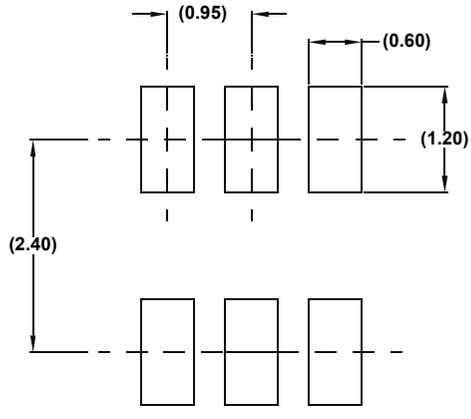


TYPICAL RECOMMENDED LAND PATTERN

NOTES:

1. Dimensions are in millimeters.
   Dimensions in ( ) for Reference Only.
2. Dimensioning and tolerancing conform to ASME Y14.5M-1994.
3. Dimension is exclusive of mold flash, protrusions or gate burrs.
4. Foot length is measured at reference to guage plane.
5. Package conforms to JEDEC MO-178AB.

chanhvinh.com



# 8. Ordering Information

| Part Number[1][2] | Gain | Part Marking[3] | Package Description (RoHS Compliant) | Pkg. Dwg. # | Carrier Type[4] | Temp. Range |
|---|---|---|---|---|---|---|
| ISL28006FH100Z-T7 | 100V/V | BDJA | 5 Ld SOT-23 | P5.064A | Reel, 3k | -40 to +125°C |
| ISL28006FH100Z-T7A | | | | | Reel, 250 | |
| ISL28006FH50Z-T7 | 50V/V | BDHA | | | Reel, 3k | |
| ISL28006FH50Z-T7A | | | | | Reel, 250 | |
| ISL28006FH20Z-T7 | 20V/V | BDGA | | | Reel, 3k | |
| ISL28006FH20Z-T7A | | | | | Reel, 250 | |
| ISL28006FHADJZ-T7 | ADJ | BDFA | 6 Ld SOT-23 | P6.064 | Reel, 3k | |
| ISL28006FHADJZ-T7A | | | | | Reel, 250 | |
| ISL28006FH-100EVAL1Z | 100V/V Evaluation Board | | | | | |
| ISL28006FH-50EVAL1Z | 50V/V Evaluation Board | | | | | |
| ISL28006FH-20EVAL1Z | 20V/V Evaluation Board | | | | | |
| ISL28006FH-ADJEVAL1Z | Adjustable Evaluation Board | | | | | |

1. These Pb-free plastic packaged products employ special Pb-free material sets, molding compounds/die attach materials, and 100% matte tin plate plus anneal (e3 termination finish, which is RoHS compliant and compatible with both SnPb and Pb-free soldering operations). Pb-free products are MSL classified at Pb-free peak reflow temperatures that meet or exceed the Pb-free requirements of IPC/JEDEC J-STD-020.
2. For Moisture Sensitivity Level (MSL), see the ISL28006 product page. For more information about MSL, see TB363.
3. The part marking is located on the bottom of the part.
4. See TB347 for details about reel specifications.

# 9. Revision History

| Revision | Date | Description |
|---|---|---|
| 7.01 | Mar 3, 2022 | Corrected the Output Resistance units from W back to ohms on page 7. |
| 7.00 | Feb 10, 2022 | Applied New Template.<br>Removed Related Literature and About Intersil sections.<br>Updated the Ordering Information table format.<br>Updated Figures 1, block diagram, Pin assignment diagram, and the figure in the pin description table.<br>Updated Figure 71 through Figure 75, and Figure 79. |
| 6.00 | Nov 22, 2013 | Added eight new Typical Performance Curves<br>1. Av=100 Capacitive Load Drive Gain vs Freq<br>2. Av=100 Capacitive Load Drive Phase vs Freq<br>3. Av=50 Capacitive Load Drive Gain vs Freq<br>4. Av=50 Capacitive Load Drive Phase vs Freq<br>5. Av=20 Capacitive Load Drive Gain vs Freq<br>6. Av=20 Capacitive Load Drive Phase vs Freq<br>7. High Side Operation Input Bias Currents<br>8. Low Side Operation Input Bias Currents<br>Under Electrical Specifications Table:<br>Changed parameter from Is to Icc to clarify supply current<br>Ordering information table: Changed Note 4 location in the table. |

chanhvinh.com



| Revision | Date | Description |
|---|---|---|
| 5.00 | Apr 12, 2011 | Converted to new template<br>Page 1 - Changed headings for “Typical Application” and “Gain Accuracy vs VRS+ = 0V to 28V” to Figure titles (Figures 1 and 2).<br>Page 1 - Updated Intersil Trademark statement at bottom of page 1 per directive from Legal.<br>Page 7 - Updated over temp note in Min Max column of spec tables from "Parameters with MIN and/or MAX limits are 100% tested at +25°C, unless otherwise specified. Temperature limits established by characterization and are not production tested." to new standard "Compliance to datasheet limits is assured by one or more methods: production test, characterization and/or design."<br>Page 19 - Figure 69, Low side current detection schematic: Moved the LOAD from the ground side of the power side circuit to the high side. |
| 4.00 | Sep 2, 2010 | Added -T7A tape and reel options to Ordering Information Table for all packages. |
| 3.00 | May 12, 2010 | Added Note 4 to Part Marking Column in Ordering Information table.<br>Corrected hyperlinks in Notes 1 and 3 in Ordering Information table.<br>Removed “Coming Soon” from evaluation boards in the Ordering Information table.<br>Added “Related Literature” on page 1<br>Updated Package Drawing Number in the Ordering Information table for the 20V, 50V and 100V options from MDP0038 to P50.64A.<br>Revised package outline drawing from MDP0038 to P5.064A on page 24. MDP0038 package contained 2 packages for both the 5 and 6 Ld SOT-23. MDP0038 was obsoleted and the packages were separated and made into 2 separate package outline drawings; P5.064A and P6.064A. Changes to the 5 Ld SOT-23 were to move dimensions from table onto drawing, add land pattern and add JEDEC reference number. |
| 2.00 | Mar 10, 2010 | Releasing adjustable gain option.<br>Added adjustable block diagram (Page 2), Added adjustable gain limits to electrical spec table, added Figures 47 through 60, Added +85°C curves to Figures 6 thru 14, 20 thru 28, 34 thru 42, and Figures 48 thru 56. Modified Figure 70. |
| 1.00 | Feb 4, 2010 | -Page 1:<br>Edited last sentence of paragraph 2.<br>Moved order of GAIN listings from 20, 50, 100 to 100, 50, 20 in the 3rd paragraph.<br>Under Features ....removed "Low Input Offset Voltage 250µV, max"<br>Under Features .... moved order of parts listing from 20, 50, 100 (from top to bottom) to 100, 50, 20.<br>-Page 3: Removed coming soon on ISL28006FH50Z and ISL28006FH20Z and changes the order or listing them to 100, 50, 20.<br>-Page 5: VOA test. Under conditions column ...deleted 20mV to. It now reads ... Vsense = 100mV<br>SR test. Under conditions column ..deleted what was there. It now reads ... Pulse on RS+pin, See Figure 51<br>-Page 6: ts test. Removed Gain = 100 and Gain = 100V/V in both description and conditions columns respectively.<br>-Page 9: Added VRS+= 12V to Figures 16, 17, 18.<br>-Page 11: Added VRS+= 12V to Figures 30, 31, 32.<br>-Page 13 & 14: Added VRS+= 12V to Figures 44, 45, 46.<br>-Page 14 Added Figure 51 and adjusted figure numbers to account for the added figure.<br>-Figs 8, 26, and 40 change "HIGH SIDE" to "VRS = 12V", where RS is subscript.<br>-Figs 9, 27, and 41 change "LOW SIDE" to "VRS = 0.1V", where RS is subscript. |
| 0.00 | Dec 14, 2009 | Initial Release |

chanhvinh.com

## IMPORTANT NOTICE AND DISCLAIMER

RENESAS ELECTRONICS CORPORATION AND ITS SUBSIDIARIES (“RENESAS”) PROVIDES TECHNICAL SPECIFICATIONS AND RELIABILITY DATA (INCLUDING DATASHEETS), DESIGN RESOURCES (INCLUDING REFERENCE DESIGNS), APPLICATION OR OTHER DESIGN ADVICE, WEB TOOLS, SAFETY INFORMATION, AND OTHER RESOURCES “AS IS” AND WITH ALL FAULTS, AND DISCLAIMS ALL WARRANTIES, EXPRESS OR IMPLIED, INCLUDING, WITHOUT LIMITATION, ANY IMPLIED WARRANTIES OF MERCHANTABILITY, FITNESS FOR A PARTICULAR PURPOSE, OR NON-INFRINGEMENT OF THIRD PARTY INTELLECTUAL PROPERTY RIGHTS.

These resources are intended for developers skilled in the art designing with Renesas products. You are solely responsible for (1) selecting the appropriate products for your application, (2) designing, validating, and testing your application, and (3) ensuring your application meets applicable standards, and any other safety, security, or other requirements. These resources are subject to change without notice. Renesas grants you permission to use these resources only for development of an application that uses Renesas products. Other reproduction or use of these resources is strictly prohibited. No license is granted to any other Renesas intellectual property or to any third party intellectual property. Renesas disclaims responsibility for, and you will fully indemnify Renesas and its representatives against, any claims, damages, costs, losses, or liabilities arising out of your use of these resources. Renesas' products are provided only subject to Renesas' Terms and Conditions of Sale or other applicable terms agreed to in writing. No use of any Renesas resources expands or otherwise alters any applicable warranties or warranty disclaimers for these products.

(Rev.1.0 Mar 2020)


### Corporate Headquarters

TOYOSU FORESIA, 3-2-24 Toyosu,
Koto-ku, Tokyo 135-0061, Japan
www.renesas.com


### Contact Information

For further information on a product, technology, the most up-to-date version of a document, or your nearest sales office, please visit:
www.renesas.com/contact/

### Trademarks

Renesas and the Renesas logo are trademarks of Renesas Electronics Corporation. All trademarks and registered trademarks are the property of their respective owners.