chanhvinh.com

ISL21080

300nA NanoPower Voltage References

FN6934
Rev.7.00
Sep 28, 2018

The ISL21080 analog voltage references feature low supply voltage operation at ultra-low 310nA typical, 1.5µA maximum operating current. Additionally, the ISL21080 family features ensured initial accuracy as low as ±0.2% and 50ppm/°C temperature coefficient.

These references are ideal for general purpose portable applications to extend battery life at lower cost. The ISL21080 is provided in the industry standard 3 Ld SOT-23 pinout.

The ISL21080 output voltages can be used as precision voltage sources for voltage monitors, control loops, standby voltages for low power states for DSP, FPGA, Datapath Controllers, microcontrollers, and other core voltages: 0.9V, 1.024V, 1.25V, 1.5V, 2.048V, 2.5V, 3.0V, 3.3V, 4.096V, and 5.0V.

Special Note: Post-assembly X-ray inspection may lead to permanent changes in device output voltage and should be minimized or avoided. For further information, see "Applications Information" on page 15 and AN1533, "X-Ray Effects on Intersil FGA References".

Applications

- Energy harvesting applications
- Wireless sensor network applications
- Low power voltage sources for controllers, FPGA, ASICs, or logic devices
- Battery management/monitoring
- Low power standby voltages
- Portable Instrumentation
- Consumer/medical electronics
- Wearable electronics
- Lower cost industrial and instrumentation
- Power regulation circuits
- Control loops and compensation networks
- LED/diode supply

Features

- Reference output voltage 0.900V, 1.024V, 1.250V, 1.500V, 2.048V, 2.500V, 3.000V, 3.300V, 4.096V, 5.000V
- Initial accuracy:
  - ISL21080-09 and -10 . . . . . ±0.7%
  - ISL21080-12 . . . . . ±0.6%
  - ISL21080-15 . . . . . ±0.5%
  - ISL21080-20 and -25 . . . . . ±0.3%
  - ISL21080-30, -33, -41, and -50 . . . . . ±0.2%
- Input voltage range:
  - ISL21080-09 . . . . . 2.0V to 5.5V
  - ISL21080-10, -12, -15, -20 and -25. . . . . 2.7V to 5.5V
  - ISL21080-30 . . . . . 3.2V to 5.5V
  - ISL21080-33 . . . . . 3.5V to 5.5V
  - ISL21080-41. . . . . 4.5V to 8.0V
  - ISL21080-50 . . . . . 5.5V to 8.0V
- Output voltage noise . . . . . $30\mu V_{P-P}$ (0.1Hz to 10Hz)
- Supply current . . . . . 1.5µA (max)
- Tempco . . . . . 50ppm/°C
- Output current capability . . . . . ±7mA
- Operating temperature range. . . . . -40°C to +85°C
- Package . . . . . 3 Ld SOT-23
- Pb-Free (RoHS compliant)

Related Literature

For a full list of related documents, visit our website:

- ISL21080 family product page

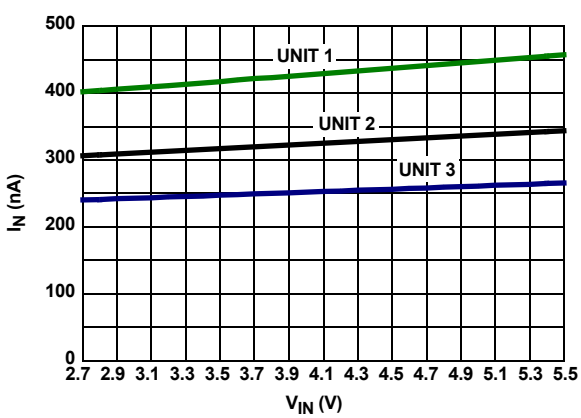

FIGURE 1. I_{IN} vs V_{IN}, THREE UNITS

chanhvinh.com

Pin Configuration

3 LD SOT-23
TOP VIEW

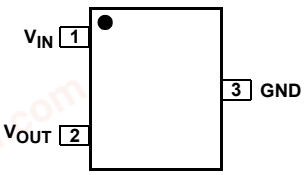

Pin Descriptions

PIN NUMBER	PIN NAME	DESCRIPTION
1	V_{IN}	Input Voltage Connection
2	V_{OUT}	Voltage Reference Output
3	GND	Ground Connection

Ordering Information

PART NUMBER (Notes 2, 3)	PART MARKING (Note 4)	V_{OUT} OPTION (V)	GRADE (%)	TEMP. RANGE (°C)	TAPE AND REEL (UNITS) (Note 1)	PACKAGE (RoHS Compliant)	PKG. DWG. #
ISL21080DIH309Z-TK	BCLA	0.9	±0.7	-40 to +85	1k	3 Ld SOT-23	P3.064A
ISL21080DIH310Z-TK	BCMA	1.024	±0.7	-40 to +85	1k	3 Ld SOT-23	P3.064A
ISL21080DIH312Z-TK	BCNA	1.25	±0.6	-40 to +85	1k	3 Ld SOT-23	P3.064A
ISL21080CIH315Z-TK	BCDA	1.5	±0.5	-40 to +85	1k	3 Ld SOT-23	P3.064A
ISL21080CIH315Z-T7A	BCDA	1.5	±0.5	-40 to +85	250	3 Ld SOT-23	P3.064A
ISL21080CIH320Z-TK	BCPA	2.048	±0.3	-40 to +85	1k	3 Ld SOT-23	P3.064A
ISL21080CIH325Z-TK	BCRA	2.5	±0.3	-40 to +85	1k	3 Ld SOT-23	P3.064A
ISL21080CIH330Z-TK	BCSA	3.0	±0.2	-40 to +85	1k	3 Ld SOT-23	P3.064A
ISL21080CIH333Z-TK	BCTA	3.3	±0.2	-40 to +85	1k	3 Ld SOT-23	P3.064A
ISL21080CIH341Z-TK	BCVA	4.096	±0.2	-40 to +85	1k	3 Ld SOT-23	P3.064A
ISL21080CIH350Z-TK	BCWA	5.0	±0.2	-40 to +85	1k	3 Ld SOT-23	P3.064A
ISL2108009EV1Z	ISL21080DIH309Z Evaluation Board						
ISL2108010EV1Z	ISL21080DIH310Z Evaluation Board						
ISL2108012EV1Z	ISL21080DIH312Z Evaluation Board						
ISL2108015EV1Z	ISL21080DIH315Z Evaluation Board						
ISL2108020EV1Z	ISL21080DIH320Z Evaluation Board						
ISL2108025EV1Z	ISL21080DIH325Z Evaluation Board						
ISL2108030EV1Z	ISL21080DIH330Z Evaluation Board						
ISL2108033EV1Z	ISL21080DIH333Z Evaluation Board						
ISL2108040EV1Z	ISL21080DIH341Z Evaluation Board						
ISL2108050EV1Z	ISL21080DIH350Z Evaluation Board						

NOTES:

1. Refer to TB347 for details about reel specifications.
2. These Pb-free plastic packaged products employ special Pb-free material sets, molding compounds/die attach materials, and 100% matte tin plate plus anneal (e3 termination finish, which is RoHS compliant and compatible with both SnPb and Pb-free soldering operations). Pb-free products are MSL classified at Pb-free peak reflow temperatures that meet or exceed the Pb-free requirements of IPC/JEDEC J STD-020.
3. For Moisture Sensitivity Level (MSL), refer to the ISL21080DIH309, ISL21080DIH310, ISL21080DIH312, ISL21080CIH315, ISL21080CIH320, ISL21080CIH325, ISL21080CIH330, ISL21080CIH333, ISL21080CIH341, and ISL21080CIH350 product information pages. For more information about MSL, see TB363.
4. The part marking is located on the bottom of the part.

chanhvinh.com

Absolute Maximum Ratings

Max Voltage
- V_{IN} to GND ..... -0.5V to +6.5V
- V_{IN} to GND (ISL21080-41 and 50 only) ..... -0.5V to +10V
- V_{OUT} to GND (10s) ..... -0.5V to V_{OUT} +1V
- V_{OUT} to GND (10s)
  - ISL21080-41 and 50 only ..... -0.5V to +5.1V

ESD Ratings
- Human Body Model (Tested to JESD22-A114) 5kV
- Machine Model (Tested to JESD22-A115) 500V
- Charged Device Model (Tested to JESD22-C101) 2kV

Latch-Up (Tested per JESD-78B; Class 2, Level A) 100mA

Thermal Information

Thermal Resistance (Typical)	θ_{JA} (°C/W)	θ_{JC} (°C/W)
3 Lead SOT-23 (Notes 6, 7)	275	110

Maximum Junction Temperature ..... +107°C
Continuous Power Dissipation (T_A = +85°C) 99mW
Storage Temperature Range ..... -65°C to +150°C
Pb-Free Reflow Profile ..... see TB493

Recommended Operating Conditions

Temperature ..... -40°C to +85°C
Supply Voltage ..... 2.7V to 5.5V

Environmental Operating Conditions

X-Ray Exposure (Note 5) 10mRem

CAUTION: Do not operate at or near the maximum ratings listed for extended periods of time. Exposure to such conditions may adversely impact product reliability and result in failures not covered by warranty.

NOTES:

5. Measured with no filtering, distance of 10" from source, intensity set to 55kV and 70µA current, 30s duration. Other exposure levels should be analyzed for Output Voltage drift effects. See "Applications Information" on page 15.
6. θ_{JA} is measured with the component mounted on a high-effective thermal conductivity test board in free air. See TB379 for details.
7. For θ_{JC}, the "case temp" location is taken at the package top center.

Electrical Specifications (ISL21080-09, V_{OUT} = 0.9V)

V_{IN} = 3.0V, T_A = -40°C to +85°C, I_{OUT} = 0, unless otherwise specified. **Boldface limits apply over the operating temperature range, -40°C to +85°C.**

PARAMETER	SYMBOL	CONDITIONS	MIN (Note 13)	TYP	MAX (Note 13)	UNIT
Output Voltage	V_{OUT}			0.9		V
V_{OUT} Accuracy at T_A = +25°C (Notes 8, 9)	V_{OA}		-0.7		+0.7	%
Output Voltage Temperature Coefficient (Note 10)	TC V_{OUT}				50	ppm/°C
Input Voltage Range	V_{IN}		**2.0**		**5.5**	V
Supply Current	I_{IN}			0.35	**1.5**	µA
Line Regulation	$\Delta V_{OUT}/\Delta V_{IN}$	2V ≤ V_{IN} ≤ 5.5V		30	**350**	µV/V
Load Regulation	$\Delta V_{OUT}/\Delta I_{OUT}$	Sourcing: 0mA ≤ I_{OUT} ≤ 10mA		6	**100**	µV/mA
		Sinking: -10mA ≤ I_{OUT} ≤ 0mA		23	**350**	µV/mA
Short-Circuit Current	I_{SC}	T_A = +25°C, V_{OUT} tied to GND		30		mA
Turn-On Settling Time	t_R	V_{OUT} = ±0.1% with no load		1		ms
Ripple Rejection		f = 120Hz		-40		dB
Output Voltage Noise	e_N	0.1Hz ≤ f ≤ 10Hz		40		μV_{P-P}
Broadband Voltage Noise	V_N	10Hz ≤ f ≤ 1kHz		10		μV_{RMS}
Noise Density		f = 1kHz		1.1		$\mu V/\sqrt{Hz}$
Thermal Hysteresis (Note 11)	$\Delta V_{OUT}/\Delta T_A$	ΔT_A = +125°C		100		ppm
Long Term Stability (Note 12)	$\Delta V_{OUT}/\Delta t$	T_A = +25°C		60		ppm

chanhvinh.com

Electrical Specifications (ISL21080-10, V_{OUT} = 1.024V)

V_{IN} = 3.0V, T_A = -40°C to +85°C, I_{OUT} = 0, unless otherwise specified. **Boldface limits apply over the operating temperature range, -40°C to +85°C.**

PARAMETER	SYMBOL	CONDITIONS	MIN (Note 13)	TYP	MAX (Note 13)	UNIT
Output Voltage	V_{OUT}			1.024		V
V_{OUT} Accuracy at T_A = +25°C (Notes 8, 9)	V_{OA}		-0.7		+0.7	%
Output Voltage Temperature Coefficient (Note 10)	TC V_{OUT}				50	ppm/°C
Input Voltage Range	V_{IN}		**2.7**		**5.5**	V
Supply Current	I_{IN}			0.31	**1.5**	µA
Line Regulation	$\Delta V_{OUT}/\Delta V_{IN}$	2.7V ≤ V_{IN} ≤ 5.5V		80	**350**	µV/V
Load Regulation	$\Delta V_{OUT}/\Delta I_{OUT}$	Sourcing: 0mA ≤ I_{OUT} ≤ 7mA		25	**100**	µV/mA
		Sinking: -7mA ≤ I_{OUT} ≤ 0mA		50	**350**	µV/mA
Short-Circuit Current	I_{SC}	T_A = +25°C, V_{OUT} tied to GND		50		mA
Turn-On Settling Time	t_R	V_{OUT} = ±0.1% with no load		4		ms
Ripple Rejection		f = 120Hz		-40		dB
Output Voltage Noise	e_N	0.1Hz ≤ f ≤ 10Hz		30		μV_{P-P}
Broadband Voltage Noise	V_N	10Hz ≤ f ≤ 1kHz		52		μV_{RMS}
Noise Density		f = 1kHz		2.2		$\mu V/\sqrt{Hz}$
Thermal Hysteresis (Note 11)	$\Delta V_{OUT}/\Delta T_A$	ΔT_A = +165°C		100		ppm
Long Term Stability (Note 12)	$\Delta V_{OUT}/\Delta t$	T_A = +25°C		50		ppm

Electrical Specifications (ISL21080-12, V_{OUT} = 1.25V)

V_{IN} = 3.0V, T_A = -40°C to +85°C, I_{OUT} = 0, unless otherwise specified. **Boldface limits apply over the operating temperature range, -40°C to +85°C.**

PARAMETER	SYMBOL	CONDITIONS	MIN (Note 13)	TYP	MAX (Note 13)	UNIT
Output Voltage	V_{OUT}			1.25		V
V_{OUT} Accuracy at T_A = +25°C (Notes 8, 9)	V_{OA}		-0.6		+0.6	%
Output Voltage Temperature Coefficient (Note 10)	TC V_{OUT}				50	ppm/°C
Input Voltage Range	V_{IN}		**2.7**		**5.5**	V
Supply Current	I_{IN}			0.31	**1.5**	µA
Line Regulation	$\Delta V_{OUT}/\Delta V_{IN}$	2.7V ≤ V_{IN} ≤ 5.5V		80	**350**	µV/V
Load Regulation	$\Delta V_{OUT}/\Delta I_{OUT}$	Sourcing: 0mA ≤ I_{OUT} ≤ 7mA		25	**100**	µV/mA
		Sinking: -7mA ≤ I_{OUT} ≤ 0mA		50	**350**	µV/mA
Short-Circuit Current	I_{SC}	T_A = +25°C, V_{OUT} tied to GND		50		mA
Turn-On Settling Time	t_R	V_{OUT} = ±0.1% with no load		4		ms
Ripple Rejection		f = 120Hz		-40		dB
Output Voltage Noise	e_N	0.1Hz ≤ f ≤ 10Hz		30		μV_{P-P}
Broadband Voltage Noise	V_N	10Hz ≤ f ≤ 1kHz		52		μV_{RMS}
Noise Density		f = 1kHz		1.1		$\mu V/\sqrt{Hz}$
Thermal Hysteresis (Note 11)	$\Delta V_{OUT}/\Delta T_A$	ΔT_A = +165°C		100		ppm
Long Term Stability (Note 12)	$\Delta V_{OUT}/\Delta t$	T_A = +25°C		50		ppm

chanhvinh.com

Electrical Specifications (ISL21080-15, V_{OUT} = 1.5V)

V_{IN} = 3.0V, T_A = -40°C to +85°C, I_{OUT} = 0, unless otherwise specified. **Boldface limits apply over the operating temperature range, -40°C to +85°C.**

PARAMETER	SYMBOL	CONDITIONS	MIN (Note 13)	TYP	MAX (Note 13)	UNIT
Output Voltage	V_{OUT}			1.5		V
V_{OUT} Accuracy at T_A = +25°C (Notes 8, 9)	V_{OA}		-0.5		+0.5	%
Output Voltage Temperature Coefficient (Note 10)	TC V_{OUT}				**50**	ppm/°C
Input Voltage Range	V_{IN}		**2.7**		**5.5**	V
Supply Current	I_{IN}			0.31	**1.5**	µA
Line Regulation	$\Delta V_{OUT}/\Delta V_{IN}$	2.7V ≤ V_{IN} ≤ 5.5V		80	**350**	µV/V
Load Regulation	$\Delta V_{OUT}/\Delta I_{OUT}$	Sourcing: 0mA ≤ I_{OUT} ≤ 7mA		10	**100**	µV/mA
		Sinking: -7mA ≤ I_{OUT} ≤ 0mA		50	**350**	µV/mA
Short-Circuit Current	I_{SC}	T_A = +25°C, V_{OUT} tied to GND		50		mA
Turn-On Settling Time	t_R	V_{OUT} = ±0.1% with no load		4		ms
Ripple Rejection		f = 120Hz		-40		dB
Output Voltage Noise	e_N	0.1Hz ≤ f ≤ 10Hz		30		μV_{P-P}
Broadband Voltage Noise	V_N	10Hz ≤ f ≤ 1kHz		52		μV_{RMS}
Noise Density		f = 1kHz		1.1		$\mu V/\sqrt{Hz}$
Thermal Hysteresis (Note 11)	$\Delta V_{OUT}/\Delta T_A$	ΔT_A = +165°C		100		ppm
Long Term Stability (Note 12)	$\Delta V_{OUT}/\Delta t$	T_A = +25°C		50		ppm

Electrical Specifications (ISL21080-20, V_{OUT} = 2.048V)

V_{IN} = 3.0V, T_A = -40°C to +85°C, I_{OUT} = 0, unless otherwise specified. **Boldface limits apply over the operating temperature range, -40°C to +85°C.**

PARAMETER	SYMBOL	CONDITIONS	MIN (Note 13)	TYP	MAX (Note 13)	UNIT
Output Voltage	V_{OUT}			2.048		V
V_{OUT} Accuracy at T_A = +25°C (Notes 8, 9)	V_{OA}		-0.3		+0.3	%
Output Voltage Temperature Coefficient (Note 10)	TC V_{OUT}				**50**	ppm/°C
Input Voltage Range	V_{IN}		**2.7**		**5.5**	V
Supply Current	I_{IN}			0.31	**1.5**	µA
Line Regulation	$\Delta V_{OUT}/\Delta V_{IN}$	2.7V ≤ V_{IN} ≤ 5.5V		80	**350**	µV/V
Load Regulation	$\Delta V_{OUT}/\Delta I_{OUT}$	Sourcing: 0mA ≤ I_{OUT} ≤ 7mA		25	**100**	µV/mA
		Sinking: -7mA ≤ I_{OUT} ≤ 0mA		50	**350**	µV/mA
Short-Circuit Current	I_{SC}	T_A = +25°C, V_{OUT} tied to GND		50		mA
Turn-On Settling Time	t_R	V_{OUT} = ±0.1% with no load		4		ms
Ripple Rejection		f = 120Hz		-40		dB
Output Voltage Noise	e_N	0.1Hz ≤ f ≤ 10Hz		30		μV_{P-P}
Broadband Voltage Noise	V_N	10Hz ≤ f ≤ 1kHz		52		μV_{RMS}
Noise Density		f = 1kHz		1.1		$\mu V/\sqrt{Hz}$
Thermal Hysteresis (Note 11)	$\Delta V_{OUT}/\Delta T_A$	ΔT_A = +165°C		100		ppm
Long Term Stability (Note 12)	$\Delta V_{OUT}/\Delta t$	T_A = +25°C		50		ppm

chanhvinh.com

Electrical Specifications (ISL21080-25, V_{OUT} = 2.5V)

V_{IN} = 3.0V, T_A = -40°C to +85°C, I_{OUT} = 0, unless otherwise specified. **Boldface limits apply over the operating temperature range, -40°C to +85°C.**

PARAMETER	SYMBOL	CONDITIONS	MIN (Note 13)	TYP	MAX (Note 13)	UNIT
Output Voltage	V_{OUT}			2.5		V
V_{OUT} Accuracy at T_A = +25°C (Notes 8, 9)	V_{OA}		-0.3		+0.3	%
Output Voltage Temperature Coefficient (Note 10)	TC V_{OUT}				50	ppm/°C
Input Voltage Range	V_{IN}		**2.7**		**5.5**	V
Supply Current	I_{IN}			0.31	**1.5**	µA
Line Regulation	$\Delta V_{OUT}/\Delta V_{IN}$	2.7V ≤ V_{IN} ≤ 5.5V		80	**350**	µV/V
Load Regulation	$\Delta V_{OUT}/\Delta I_{OUT}$	Sourcing: 0mA ≤ I_{OUT} ≤ 7mA		25	**100**	µV/mA
		Sinking: -7mA ≤ I_{OUT} ≤ 0mA		50	**350**	µV/mA
Short-Circuit Current	I_{SC}	T_A = +25°C, V_{OUT} tied to GND		50		mA
Turn-On Settling Time	t_R	V_{OUT} = ±0.1% with no load		4		ms
Ripple Rejection		f = 120Hz		-40		dB
Output Voltage Noise	e_N	0.1Hz ≤ f ≤ 10Hz		30		μV_{P-P}
Broadband Voltage Noise	V_N	10Hz ≤ f ≤ 1kHz		52		μV_{RMS}
Noise Density		f = 1kHz		1.1		$\mu V/\sqrt{Hz}$
Thermal Hysteresis (Note 11)	$\Delta V_{OUT}/\Delta T_A$	ΔT_A = +165°C		100		ppm
Long Term Stability (Note 12)	$\Delta V_{OUT}/\Delta t$	T_A = +25°C		50		ppm

Electrical Specifications (ISL21080-30, V_{OUT} = 3.0V)

V_{IN} = 5.0V, T_A = -40°C to +85°C, I_{OUT} = 0, unless otherwise specified. **Boldface limits apply over the operating temperature range, -40°C to +85°C.**

PARAMETER	SYMBOL	CONDITIONS	MIN (Note 13)	TYP	MAX (Note 13)	UNIT
Output Voltage	V_{OUT}			3.0		V
V_{OUT} Accuracy at T_A = +25°C (Notes 8, 9)	V_{OA}		-0.2		+0.2	%
Output Voltage Temperature Coefficient (Note 10)	TC V_{OUT}				**50**	ppm/°C
Input Voltage Range	V_{IN}		**3.2**		**5.5**	V
Supply Current	I_{IN}			0.31	**1.5**	µA
Line Regulation	$\Delta V_{OUT}/\Delta V_{IN}$	3.2V ≤ V_{IN} ≤ 5.5V		80	**350**	µV/V
Load Regulation	$\Delta V_{OUT}/\Delta I_{OUT}$	Sourcing: 0mA ≤ I_{OUT} ≤ 7mA		25	**100**	µV/mA
		Sinking: -7mA ≤ I_{OUT} ≤ 0mA		50	**350**	µV/mA
Short-Circuit Current	I_{SC}	T_A = +25°C, V_{OUT} tied to GND		50		mA
Turn-On Settling Time	t_R	V_{OUT} = ±0.1% with no load		4		ms
Ripple Rejection		f = 120Hz		-40		dB
Output Voltage Noise	e_N	0.1Hz ≤ f ≤ 10Hz		30		μV_{P-P}
Broadband Voltage Noise	V_N	10Hz ≤ f ≤ 1kHz		52		μV_{RMS}
Noise Density		f = 1kHz		1.1		$\mu V/\sqrt{Hz}$
Thermal Hysteresis (Note 11)	$\Delta V_{OUT}/\Delta T_A$	ΔT_A = +165°C		100		ppm
Long Term Stability (Note 12)	$\Delta V_{OUT}/\Delta t$	T_A = +25°C		50		ppm

chanhvinh.com

Electrical Specifications (ISL21080-33, V_{OUT} = 3.3V)

V_{IN} = 5.0V, T_A = -40°C to +85°C, I_{OUT} = 0, unless otherwise specified. **Boldface limits apply over the operating temperature range, -40°C to +85°C.**

PARAMETER	SYMBOL	CONDITIONS	MIN (Note 13)	TYP	MAX (Note 13)	UNIT
Output Voltage	V_{OUT}			3.3		V
V_{OUT} Accuracy at T_A = +25°C (Notes 8, 9)	V_{OA}		-0.2		+0.2	%
Output Voltage Temperature Coefficient (Note 10)	TC V_{OUT}				50	ppm/°C
Input Voltage Range	V_{IN}		**3.5**		**5.5**	V
Supply Current	I_{IN}			0.31	**1.5**	µA
Line Regulation	$\Delta V_{OUT}/\Delta V_{IN}$	3.5 V ≤ V_{IN} ≤ 5.5V		80	**350**	µV/V
Load Regulation	$\Delta V_{OUT}/\Delta I_{OUT}$	Sourcing: 0mA ≤ I_{OUT} ≤ 10mA		25	**100**	µV/mA
		Sinking: -10mA ≤ I_{OUT} ≤ 0mA		50	**350**	µV/mA
Short-Circuit Current	I_{SC}	T_A = +25°C, V_{OUT} tied to GND		50		mA
Turn-On Settling Time	t_R	V_{OUT} = ±0.1% with no load		4		ms
Ripple Rejection		f = 120Hz		-40		dB
Output Voltage Noise	e_N	0.1Hz ≤ f ≤ 10Hz		30		μV_{P-P}
Broadband Voltage Noise	V_N	10Hz ≤ f ≤ 1kHz		52		μV_{RMS}
Noise Density		f = 1kHz		1.1		$\mu V/\sqrt{Hz}$
Thermal Hysteresis (Note 11)	$\Delta V_{OUT}/\Delta T_A$	ΔT_A = +165°C		100		ppm
Long Term Stability (Note 12)	$\Delta V_{OUT}/\Delta t$	T_A = +25°C		50		ppm

Electrical Specifications (ISL21080-41 V_{OUT} = 4.096V)

V_{IN} = 5.0V, T_A = -40°C to +85°C, I_{OUT} = 0, unless otherwise specified. **Boldface limits apply over the operating temperature range, -40°C to +85°C.**

PARAMETER	SYMBOL	CONDITIONS	MIN (Note 13)	TYP	MAX (Note 13)	UNIT
Output Voltage	V_{OUT}			4.096		V
V_{OUT} Accuracy at T_A = +25°C (Notes 8, 9)	V_{OA}		-0.2		+0.2	%
Output Voltage Temperature Coefficient (Note 10)	TC V_{OUT}				**50**	ppm/°C
Input Voltage Range	V_{IN}		**4.5**		**8.0**	V
Supply Current	I_{IN}			0.5	**1.5**	µA
Line Regulation	$\Delta V_{OUT}/\Delta V_{IN}$	4.5 V ≤ V_{IN} ≤ 8.0V		80	**350**	µV/V
Load Regulation	$\Delta V_{OUT}/\Delta I_{OUT}$	Sourcing: 0mA ≤ I_{OUT} ≤ 10mA		10	**100**	µV/mA
		Sinking: -10mA ≤ I_{OUT} ≤ 0mA		20	**350**	µV/mA
Short-Circuit Current	I_{SC}	T_A = +25°C, V_{OUT} tied to GND		80		mA
Turn-On Settling Time	t_R	V_{OUT} = ±0.1% with no load		4		ms
Ripple Rejection		f = 120Hz		-40		dB
Output Voltage Noise	e_N	0.1Hz ≤ f ≤ 10Hz		30		μV_{P-P}
Broadband Voltage Noise	V_N	10Hz ≤ f ≤ 1kHz		52		μV_{RMS}
Noise Density		f = 1kHz		1.1		$\mu V/\sqrt{Hz}$
Thermal Hysteresis (Note 11)	$\Delta V_{OUT}/\Delta T_A$	ΔT_A = +165°C		100		ppm
Long Term Stability (Note 12)	$\Delta V_{OUT}/\Delta t$	T_A = +25°C		50		ppm

chanhvinh.com

Electrical Specifications (ISL21080-50 V_{OUT} = 5.0V)

V_{IN} = 6.5V, T_A = -40°C to +85°C, I_{OUT} = 0, unless otherwise specified. **Boldface limits apply over the operating temperature range, -40°C to +85°C.**

PARAMETER	SYMBOL	CONDITIONS	MIN (Note 13)	TYP	MAX (Note 13)	UNIT
Output Voltage	V_{OUT}			5.0		V
V_{OUT} Accuracy at T_A = +25°C (Notes 8, 9)	V_{OA}		-0.2		+0.2	%
Output Voltage Temperature Coefficient (Note 10)	TC V_{OUT}				**50**	ppm/°C
Input Voltage Range	V_{IN}		**5.5**		**8.0**	V
Supply Current	I_{IN}			0.5	**1.5**	µA
Line Regulation	$\Delta V_{OUT}/\Delta V_{IN}$	5.5 V ≤ V_{IN} ≤ 8.0V		80	**350**	µV/V
Load Regulation	$\Delta V_{OUT}/\Delta I_{OUT}$	Sourcing: 0mA ≤ I_{OUT} ≤ 10mA		10	**100**	µV/mA
		Sinking: -10mA ≤ I_{OUT} ≤ 0mA		20	**350**	µV/mA
Short-Circuit Current	I_{SC}	T_A = +25°C, V_{OUT} tied to GND		80		mA
Turn-On Settling Time	t_R	V_{OUT} = ±0.1% with no load		4		ms
Ripple Rejection		f = 120Hz		-40		dB
Output Voltage Noise	e_N	0.1Hz ≤ f ≤ 10Hz		30		μV_{P-P}
Broadband Voltage Noise	V_N	10Hz ≤ f ≤ 1kHz		52		μV_{RMS}
Noise Density		f = 1kHz		1.1		$\mu V/\sqrt{Hz}$
Thermal Hysteresis (Note 11)	$\Delta V_{OUT}/\Delta T_A$	ΔT_A = +165°C		100		ppm
Long Term Stability (Note 12)	$\Delta V_{OUT}/\Delta t$	T_A = +25°C		50		ppm

NOTES:

8. Post-reflow drift for the ISL21080 devices ranges from 100µV to 1.0mV based on experimental results with devices on FR4 double sided boards. The design engineer must take this into account when considering the reference voltage after assembly.
9. Post-assembly X-ray inspection may also lead to permanent changes in device output voltage and should be minimized or avoided. Initial accuracy can change 10mV or more under extreme radiation. Most inspection equipment does not affect the FGA reference voltage, but if X-ray inspection is required, it is advisable to monitor the reference output voltage to verify excessive shift has not occurred.
10. Over the specified temperature range. Temperature coefficient is measured by the box method whereby the change in V_{OUT} is divided by the temperature range; in this case, -40°C to +85°C = +125°C.
11. Thermal Hysteresis is the change of V_{OUT} measured at T_A = +25°C after temperature cycling over a specified range, ΔT_A. V_{OUT} is read initially at T_A = +25°C for the device under test. The device is temperature cycled and a second V_{OUT} measurement is taken at +25°C. The difference between the initial V_{OUT} reading and the second V_{OUT} reading is then expressed in ppm. For ΔT_A = +125°C, the device under test is cycled from +25°C to +85°C to -40°C to +25°C.
12. Long term drift is logarithmic in nature and diminishes over time. Drift after the first 1000 hours is approximately $10ppm/\sqrt{1khrs}$.
13. Parameters with MIN and/or MAX limits are 100% tested at +25°C, unless otherwise specified. Temperature limits established by characterization and are not production tested.

chanhvinh.com

Typical Performance Characteristics Curves V_{OUT} = 0.9V

V_{IN} = 3.0V, I_{OUT} = 0mA, T_A = +25°C unless otherwise specified.

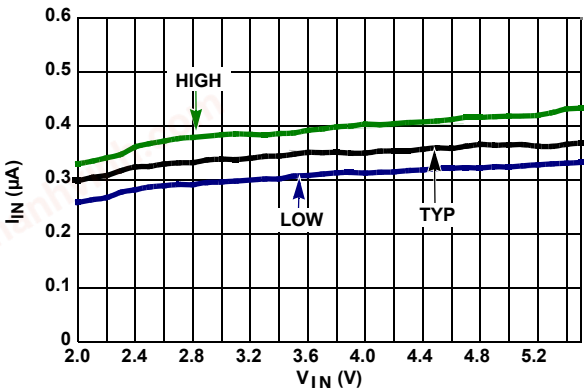

FIGURE 2. I_{IN} vs V_{IN}, THREE UNITS

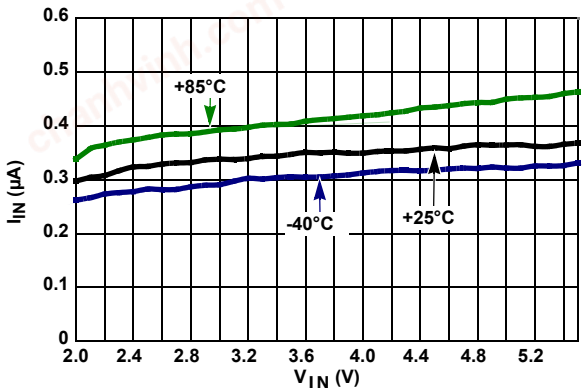

FIGURE 3. I_{IN} vs V_{IN} OVER-TEMPERATURE

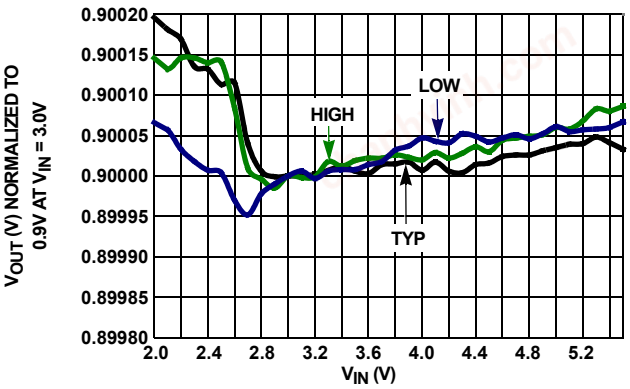

FIGURE 4. LINE REGULATION, THREE UNITS

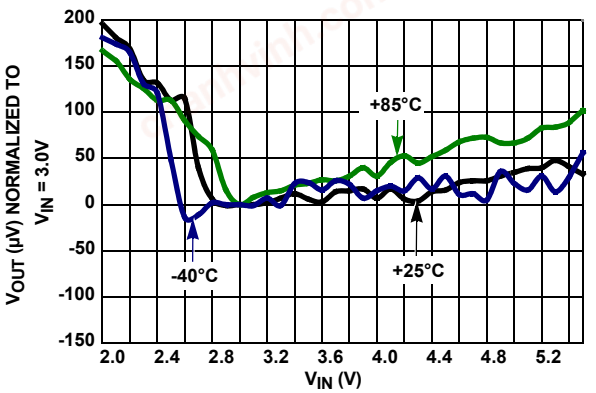

FIGURE 5. LINE REGULATION OVER-TEMPERATURE

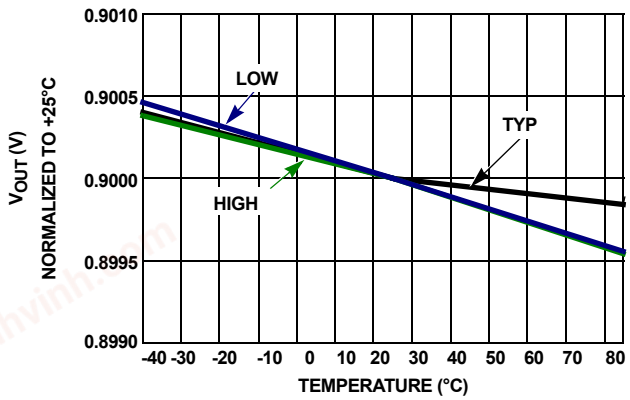

FIGURE 6. V_{OUT} vs TEMPERATURE NORMALIZED to +25°C

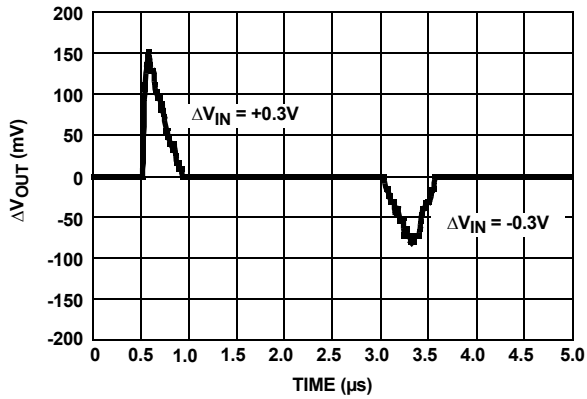

FIGURE 7. LINE TRANSIENT RESPONSE, WITH CAPACITIVE LOAD

chanhvinh.com

Typical Performance Characteristics Curves V_{OUT} = 0.9V

V_{IN} = 3.0V, I_{OUT} = 0mA, T_A = +25°C unless otherwise specified. **(Continued)**

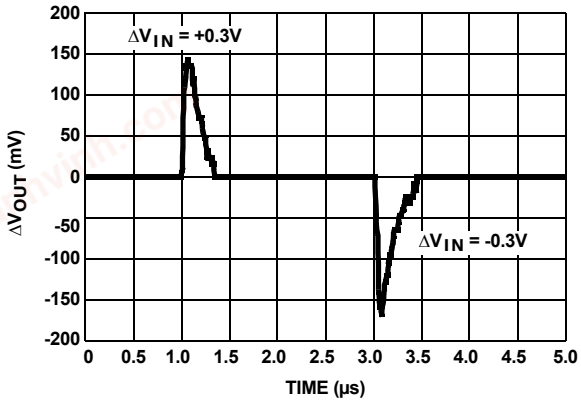

FIGURE 8. LINE TRANSIENT RESPONSE

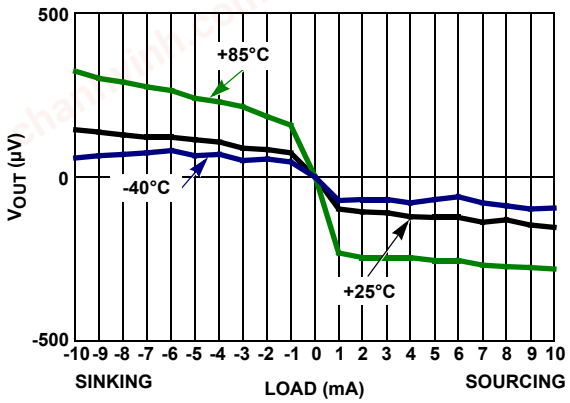

FIGURE 9. LOAD REGULATION OVER-TEMPERATURE

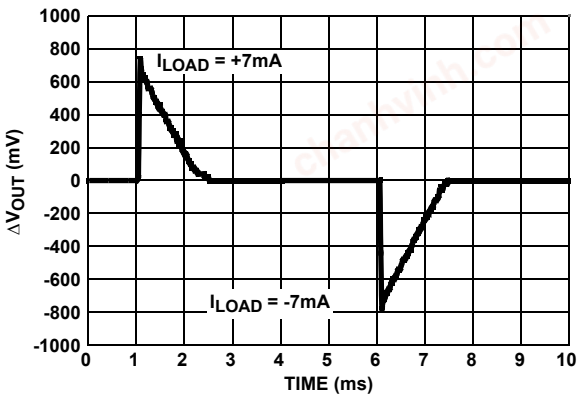

FIGURE 10. LOAD TRANSIENT RESPONSE

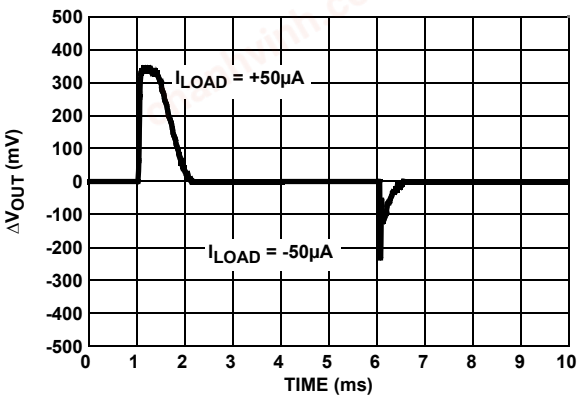

FIGURE 11. LOAD TRANSIENT RESPONSE

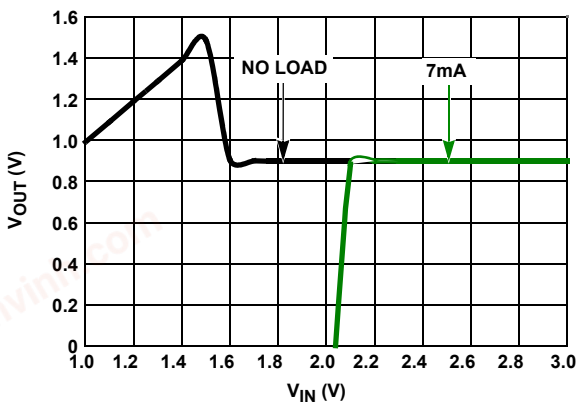

FIGURE 12. DROPOUT

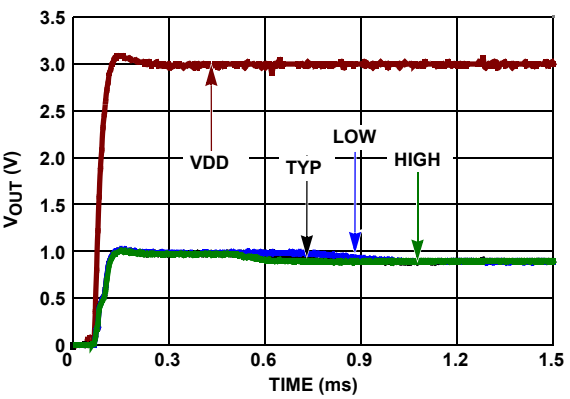

FIGURE 13. TURN-ON TIME

chanhvinh.com

Typical Performance Characteristics Curves V_{OUT} = 1.5V V_{IN} = 3.0V, I_{OUT} = 0mA, T_A = +25°C unless otherwise specified.

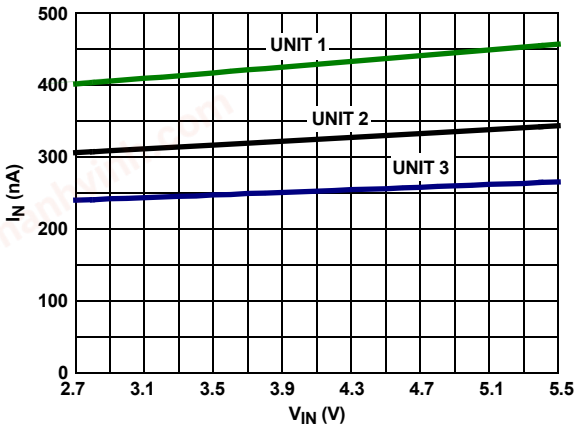

FIGURE 14. I_{IN} vs V_{IN}, THREE UNITS

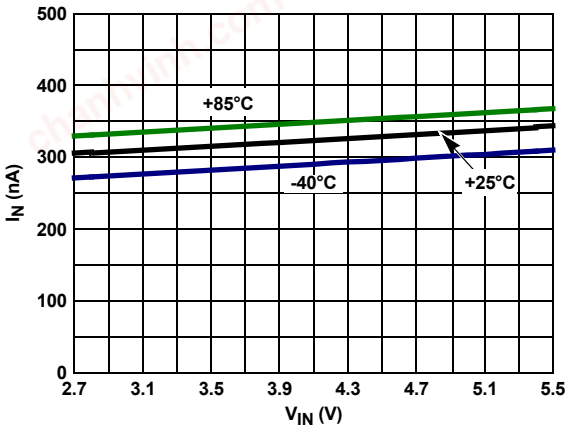

FIGURE 15. I_{IN} vs V_{IN} OVER-TEMPERATURE

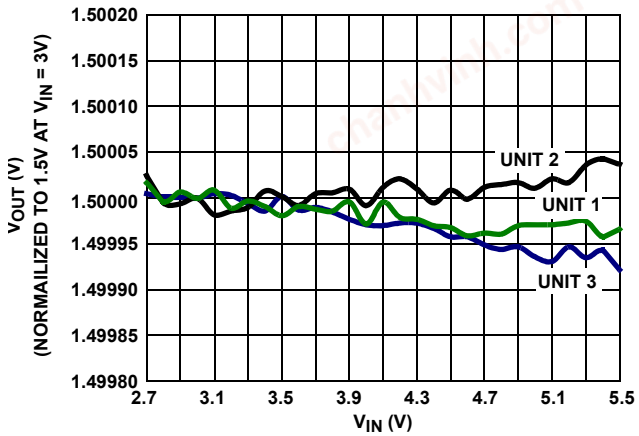

FIGURE 16. LINE REGULATION, THREE UNITS

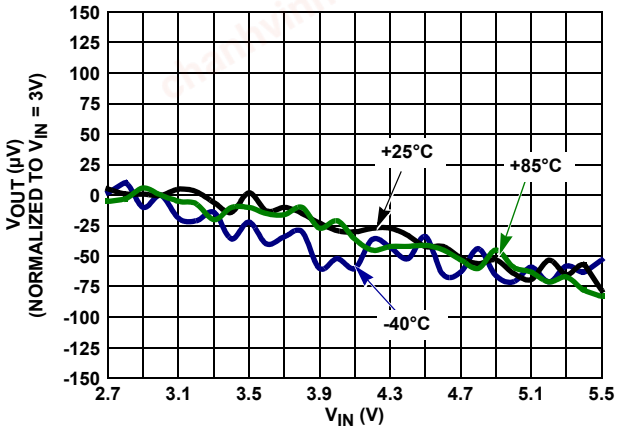

FIGURE 17. LINE REGULATION OVER-TEMPERATURE

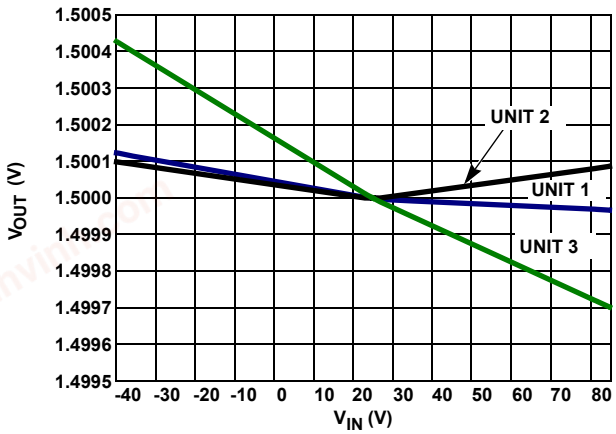

FIGURE 18. V_{OUT} vs TEMPERATURE NORMALIZED to +25°C

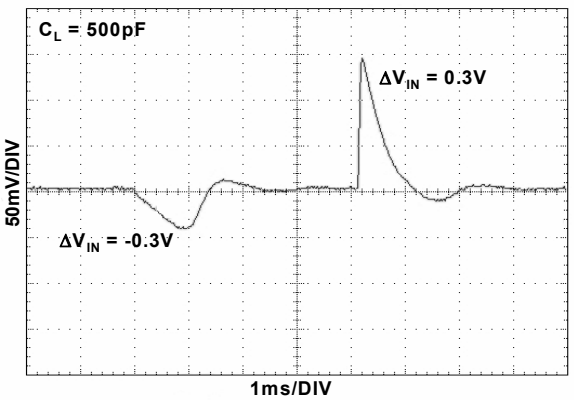

FIGURE 19. LINE TRANSIENT RESPONSE, WITH CAPACITIVE LOAD

chanhvinh.com

Typical Performance Characteristics Curves V_{OUT} = 1.5V V_{IN} = 3.0V, I_{OUT} = 0mA, T_A = +25°C unless otherwise specified. **(Continued)**

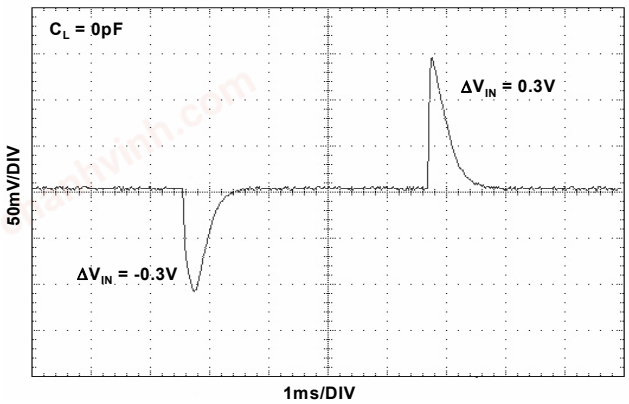

FIGURE 20. LINE TRANSIENT RESPONSE

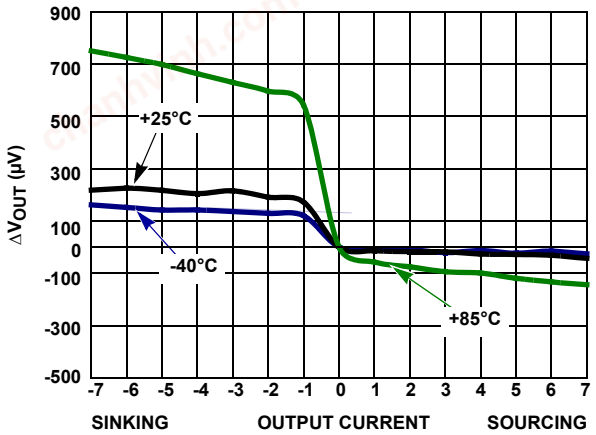

FIGURE 21. LOAD REGULATION OVER-TEMPERATURE

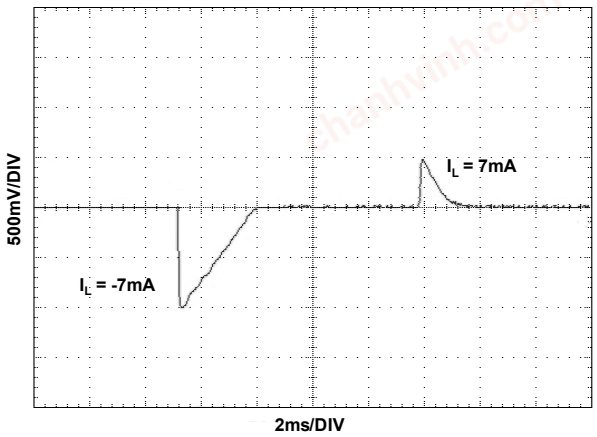

FIGURE 22. LOAD TRANSIENT RESPONSE

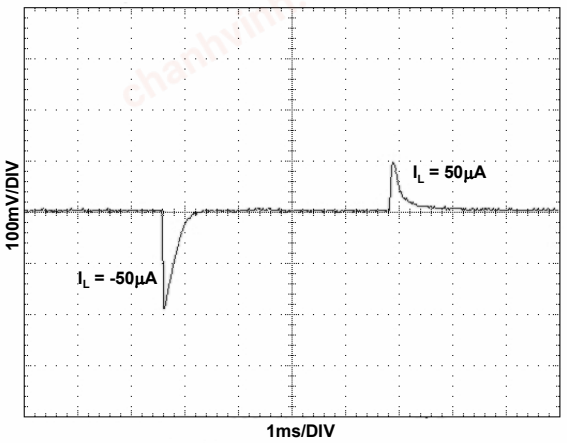

FIGURE 23. LOAD TRANSIENT RESPONSE

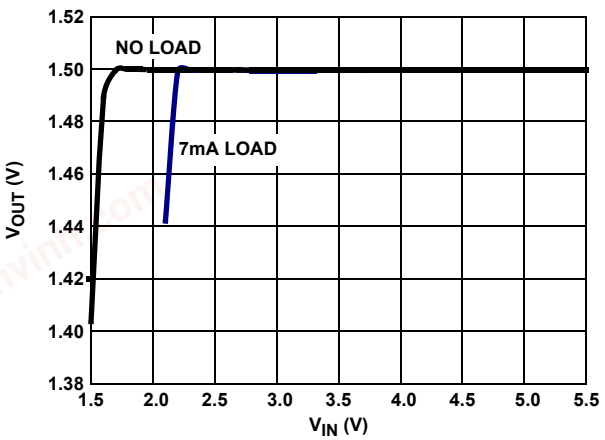

FIGURE 24. DROPOUT

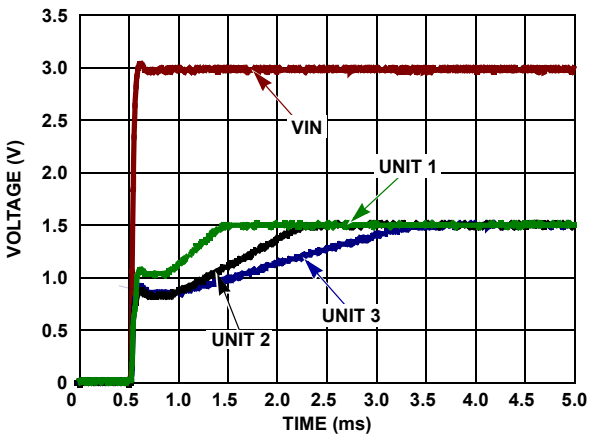

FIGURE 25. TURN-ON TIME

chanhvinh.com

Typical Performance Characteristics Curves V_{OUT} = 1.5V V_{IN} = 3.0V, I_{OUT} = 0mA, T_A = +25°C unless otherwise specified. **(Continued)**

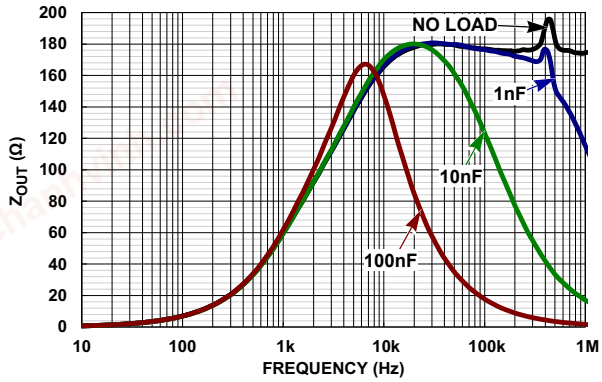

FIGURE 26. Z_{OUT} vs FREQUENCY, I_{OUT} = 2mA

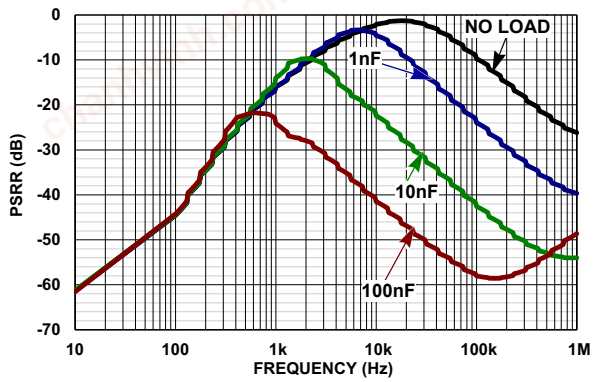

FIGURE 27. PSRR vs FREQUENCY

Typical Performance Characteristics Curves T_A = +25°C unless otherwise specified.

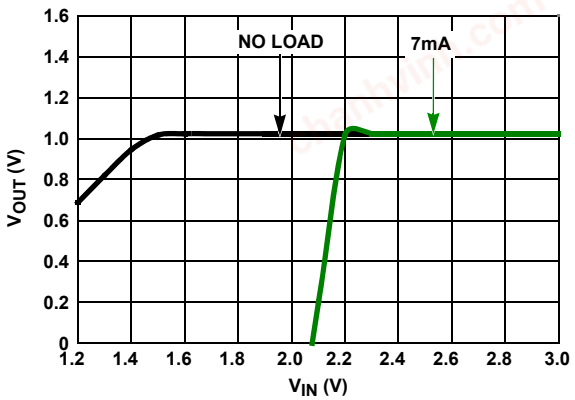

FIGURE 28. DROPOUT, ISL21080-10

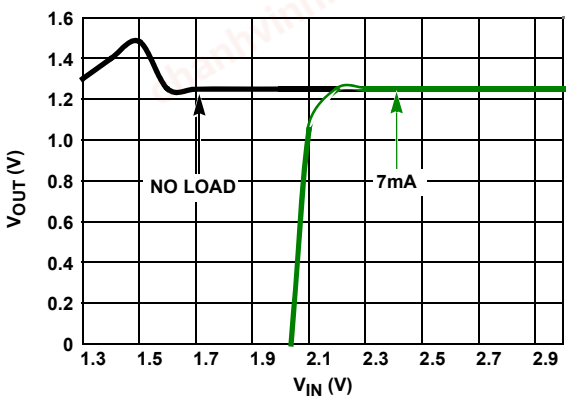

FIGURE 29. DROPOUT, ISL21080-12

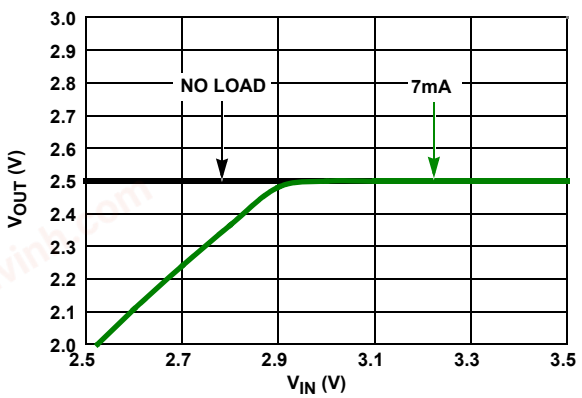

FIGURE 30. DROPOUT, ISL21080-25

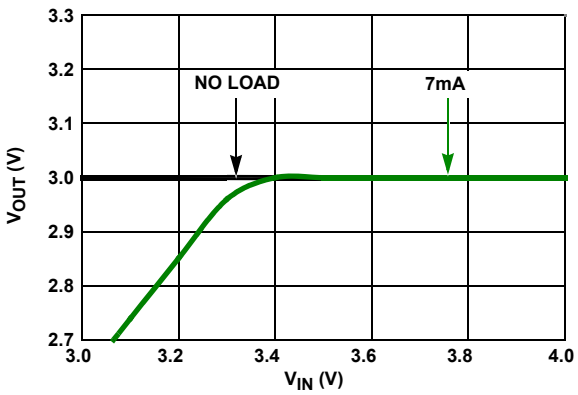

FIGURE 31. DROPOUT, ISL21080-30

chanhvinh.com

Typical Performance Characteristics Curves

T_A = +25°C unless otherwise specified. **(Continued)**

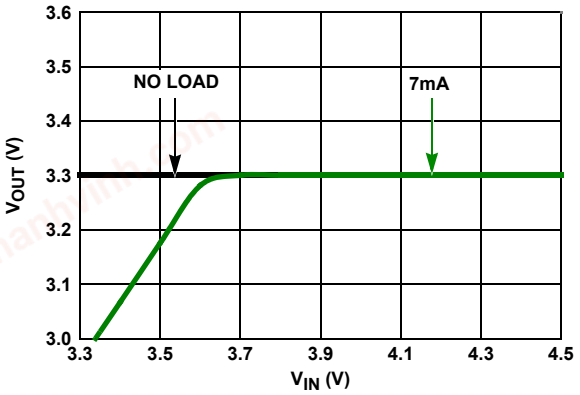

FIGURE 32. DROPOUT, ISL21080-33

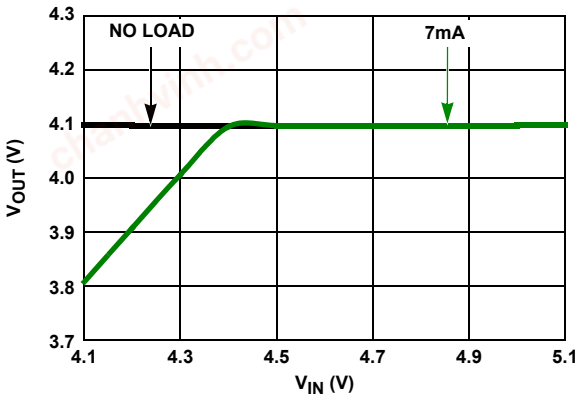

FIGURE 33. DROPOUT, ISL21080-41

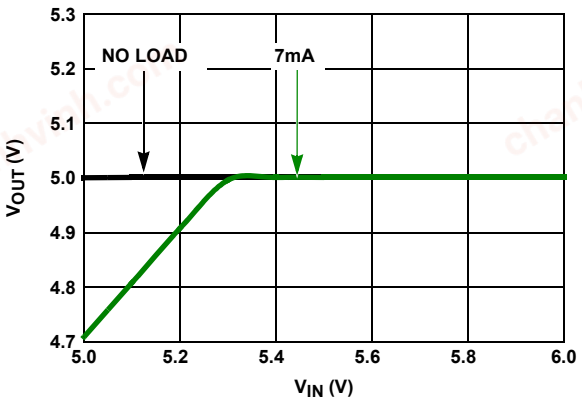

FIGURE 34. DROPOUT, ISL21080-50

High Current Application

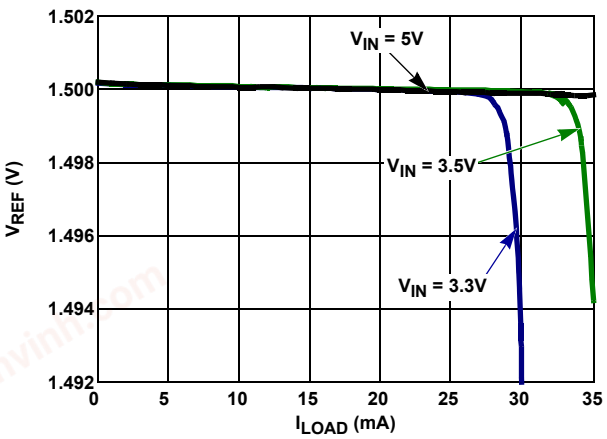

FIGURE 35. DIFFERENT V_{IN} AT ROOM TEMPERATURE

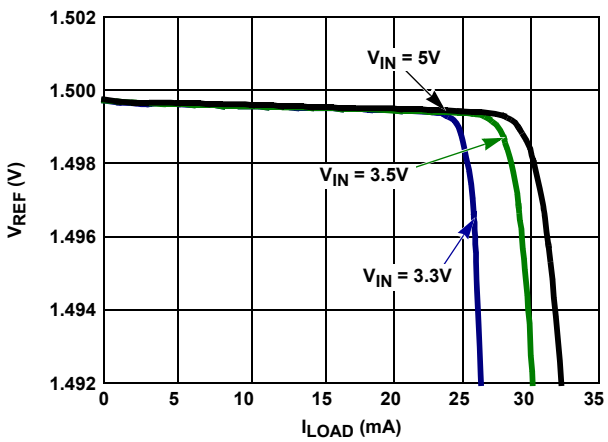

FIGURE 36. DIFFERENT V_{IN} AT HIGH TEMPERATURE (+85°C)

chanhvinh.com

Applications Information

FGA Technology

The ISL21080 series of voltage references use floating gate technology to create references with very low drift and supply current. Essentially, the charge stored on a floating gate cell is set precisely in manufacturing. The reference voltage output itself is a buffered version of the floating gate voltage. The resulting reference device has excellent characteristics which are unique in the industry: very low temperature drift, high initial accuracy, and almost zero supply current. The reference voltage itself is not limited by voltage bandgaps or Zener settings, so a wide range of reference voltages can be programmed (standard voltage settings are provided, but customer-specific voltages are available).

The process used for these reference devices is a floating gate CMOS process, and the amplifier circuitry uses CMOS transistors for amplifier and output transistor circuitry. While providing excellent accuracy, there are limitations in output noise level and load regulation due to the MOS device characteristics. These limitations are addressed with circuit techniques discussed in other sections.

Board Assembly Considerations

FGA references provide high accuracy and low temperature drift but some PCB assembly precautions are necessary. Normal Output voltage shifts of 100µV to 1mV can be expected with Pb-free reflow profiles or wave solder on multi-layer FR4 PC boards. Avoid excessive heat or extended exposure to high reflow or wave solder temperatures. This may reduce device initial accuracy.

Post-assembly X-ray inspection may also lead to permanent changes in device output voltage and should be minimized or avoided. If X-ray inspection is required, it is advisable to monitor the reference output voltage to verify excessive shift has not occurred. If large amounts of shift are observed, it is best to add an X-ray shield consisting of thin zinc (300µm) sheeting to allow clear imaging, yet block X-ray energy that affects the FGA reference.

Special Applications Considerations

In addition to post-assembly examination, other X-ray sources may affect the FGA reference long term accuracy. Airport screening machines contain X-rays and has a cumulative effect on the voltage reference output accuracy. Carry-on luggage screening uses low level X-rays and is not a major source of output voltage shift; however, if a product is expected to pass through that type of screening over 100 times, it may need to consider shielding with copper or aluminum. Checked luggage X-rays are higher intensity and can cause output voltage shift in much fewer passes, thus devices expected to go through those machines should definitely consider shielding. Note that just two layers of 1/2 ounce copper planes reduce the received dose by over 90%. The leadframe for the device which is on the bottom also provides similar shielding.

If a device is expected to pass through luggage X-ray machines numerous times, it is advised to mount a 2-layer (minimum) PCB on the top, and along with a ground plane underneath will effectively shield it from 50 to 100 passes through the machine. Because these machines vary in X-ray dose delivered, it is difficult to produce an accurate maximum pass recommendation.

Nanopower Operation

Reference devices achieve their highest accuracy when powered up continuously, and after initial stabilization has taken place. This drift can be eliminated by leaving the power on continuously.

The ISL21080 is the first high precision voltage reference with ultra low power consumption that makes it possible to leave power on continuously in battery operated circuits. The ISL21080 consumes extremely low supply current due to the proprietary FGA technology. Supply current at room temperature is typically 350nA, which is 1 to 2 orders of magnitude lower than competitive devices. Application circuits using battery power benefit greatly from having an accurate, stable reference, which essentially presents no load to the battery.

In particular, battery powered data converter circuits that would normally require the entire circuit to be disabled when not in use can remain powered up between conversions as shown in Figure 37. Data acquisition circuits providing 12 bits to 24 bits of accuracy can operate with the reference device continuously biased with no power penalty, providing the highest accuracy and lowest possible long term drift.

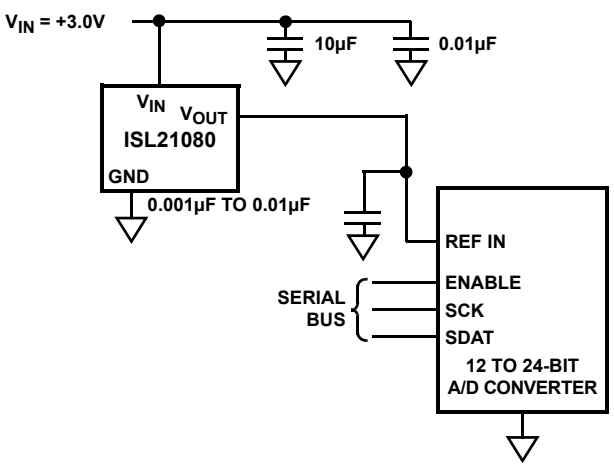

FIGURE 37. REFERENCE INPUT FOR ADC CONVERTER

Other reference devices consuming higher supply currents need to be disabled in between conversions to conserve battery capacity. Absolute accuracy suffers as the device is biased and requires time to settle to its final value, or, may not actually settle to a final value as power on time may be short. Table 1 shows an example of battery life in years for ISL21080 in various power on conditions with 1.5µA maximum current consumption.

TABLE 1. EXAMPLE OF BATTERY LIFE IN YEARS FOR ISL21080 IN VARIOUS POWER ON CONDITIONS WITH 1.5µA MAX CURRENT

BATTERY RATING (mAH)	CONTINUOUS	50% DUTY CYCLE	10% DUTY CYCLE
40	3	6	30*
225	16.3*	32.6*	163*

NOTE: *Typical Li-ion battery has a shelf life of up to 10 years.

chanhvinh.com

ISL21080 Used as a Low Cost Precision Current Source

Using an N-JET and an ISL21080 Nanopower voltage reference, a precision, low cost, high impedance current source can be created. The precision of the current source is largely dependent on the tempco and accuracy of the reference. The current setting resistor contributes less than 20% of the error.

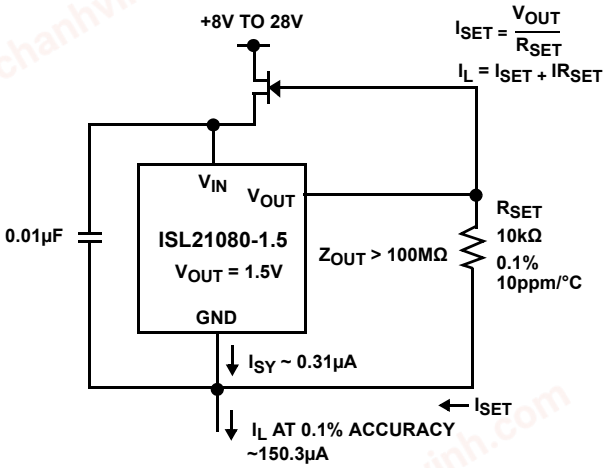

FIGURE 38. ISL21080 USED AS A LOW COST PRECISION CURRENT SOURCE

Output Impedance vs Load Current

The normal operation of the ISL21080 is to "source current" at a specific reference voltage. This part is not suitable for applications resulting in the output having to simultaneously source and sink load currents, as it is a nano-powered part. This can occur if the voltage reference is used in a bi-directional filter resulting in output currents having to both source and sink. In an event where such currents are applied, at every zero crossing, the part becomes unstable and generates voltage spikes as shown in Figure 39 (blue trace). The output impedance due to these voltage spikes is much larger (Figure 40) than if the voltage reference is only sourcing (Figure 41) or only sinking (Figure 42). Notice in Figure 41 and Figure 42, there is a direct correlation between the output impedance vs load current.

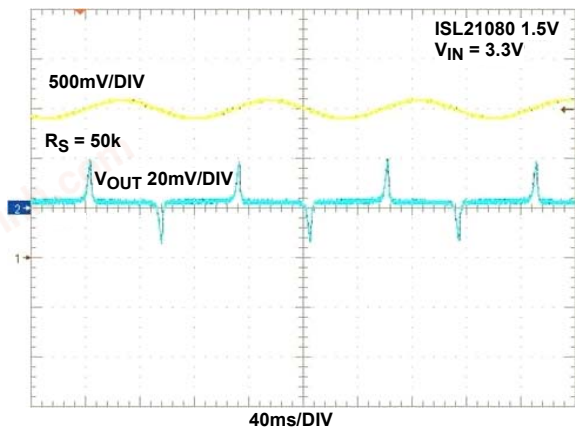

FIGURE 39. OUTPUT VOLTAGE SPIKES CAUSED BY SOURCING AND SINKING OUTPUT LOAD CURRENTS AT ZERO CROSSING

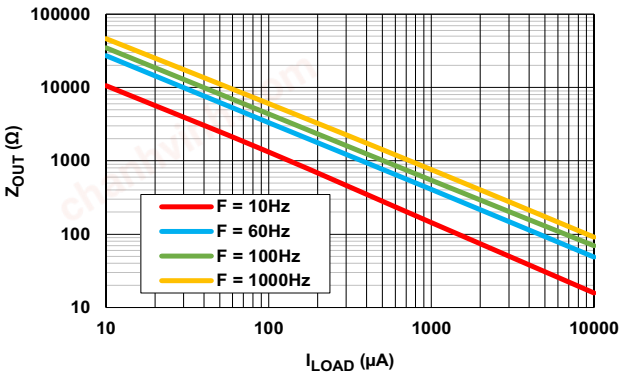

FIGURE 40. ZOUT VS LOAD (SOURCING AND SINKING) CURRENT, NO LOAD CAPACITANCE

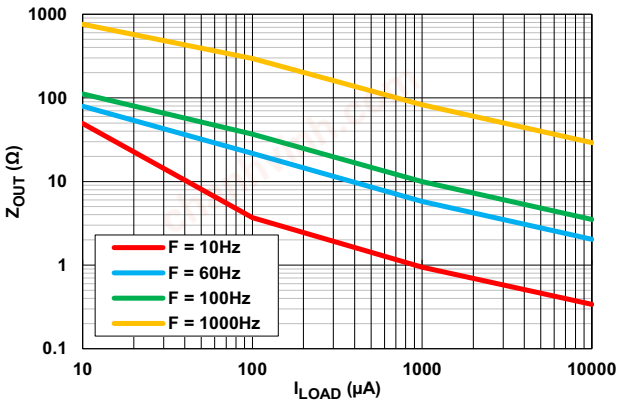

FIGURE 41. ZOUT VS LOAD (SOURCING) CURRENT, NO LOAD CAPACITANCE

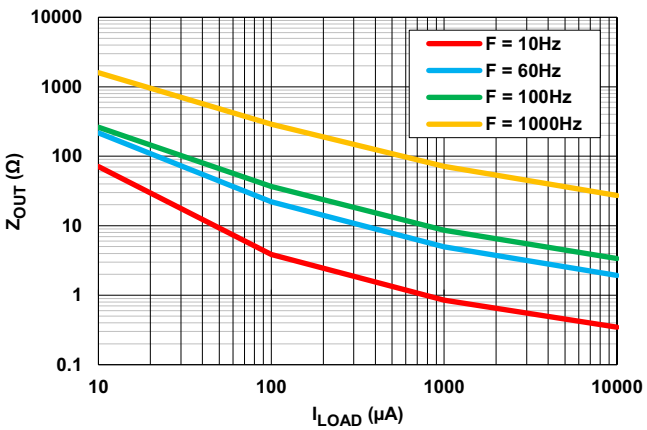

FIGURE 42. ZOUT VS LOAD (SINKING) CURRENT, NO LOAD CAPACITANCE

chanhvinh.com

Board Mounting Considerations

For applications requiring the highest accuracy, board mounting location should be reviewed. Placing the device in areas subject to slight twisting can reduce the accuracy of the reference voltage due to die stresses. It is normally best to place the device near the edge of a board, or the shortest side, as the axis of bending is most limited at that location. Obviously, mounting the device on flexprint or extremely thin PC material will likewise cause loss of reference accuracy.

Noise Performance and Reduction

The output noise voltage in a 0.1Hz to 10Hz bandwidth is typically $30\mu V_{P-P}$. Noise in the 10kHz to 1MHz bandwidth is approximately $400\mu V_{P-P}$ with no capacitance on the output, as shown in Figure 43. These noise measurements are made with a 2 decade bandpass filter made of a 1-pole high-pass filter with a corner frequency at 1/10 of the center frequency and 1-pole low-pass filter with a corner frequency at 10 times the center frequency. Figure 43 also shows the noise in the 10kHz to 1MHz band can be reduced to about $50\mu V_{P-P}$ using a 0.001µF capacitor on the output. Noise in the 1kHz to 100kHz band can be further reduced using a 0.1µF capacitor on the output, but noise in the 1Hz to 100Hz band increases due to instability of the very low power amplifier with a 0.1µF capacitance load. For load capacitances above 0.001µF, the noise reduction network shown in Figure 44 is recommended. This network reduces noise significantly over the full bandwidth. As shown in Figure 43, noise is reduced to less than $40\mu V_{P-P}$ from 1Hz to 1MHz using this network with a 0.01µF capacitor and a 2kΩ resistor in series with a 10µF capacitor.

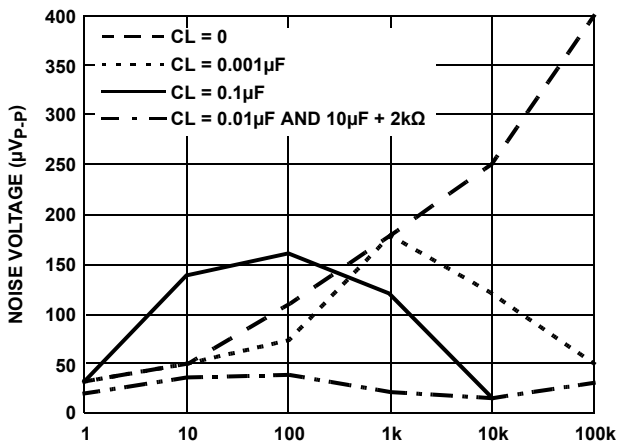

FIGURE 43. NOISE REDUCTION

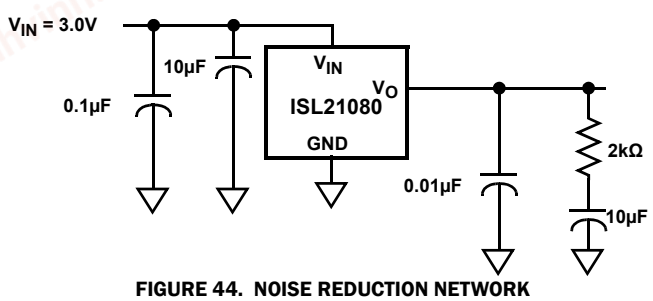

FIGURE 44. NOISE REDUCTION NETWORK

Turn-On Time

The ISL21080 devices have ultra-low supply current and thus, the time to bias-up internal circuitry to final values is longer than with higher power references. Normal turn-on time is typically 4ms. Because devices can vary in supply current down to >300nA, turn-on time can last up to about 12ms. Care should be taken in system design to include this delay before measurements or conversions are started.

Temperature Coefficient

The limits stated for temperature coefficient (tempco) are governed by the method of measurement. The overwhelming standard for specifying the temperature drift of a reference is to measure the reference voltage at two temperatures, take the total variation, (V_{HIGH} - V_{LOW}), and divide by the temperature extremes of measurement (T_{HIGH} – T_{LOW}). The result is divided by the nominal reference voltage (at T = +25°C) and multiplied by 10^6 to yield ppm/°C. This is the “Box” method for specifying temperature coefficient.

chanhvinh.com

Typical Application Circuits

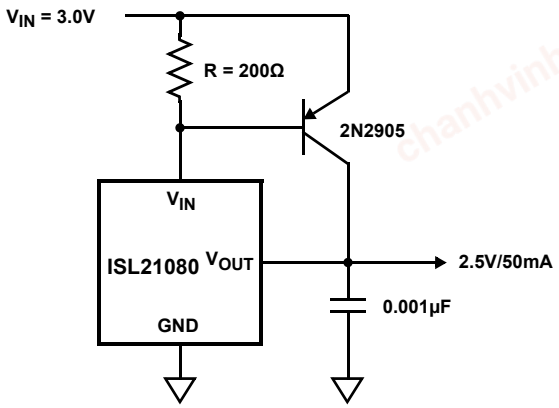

FIGURE 45. PRECISION 2.5V 50mA REFERENCE

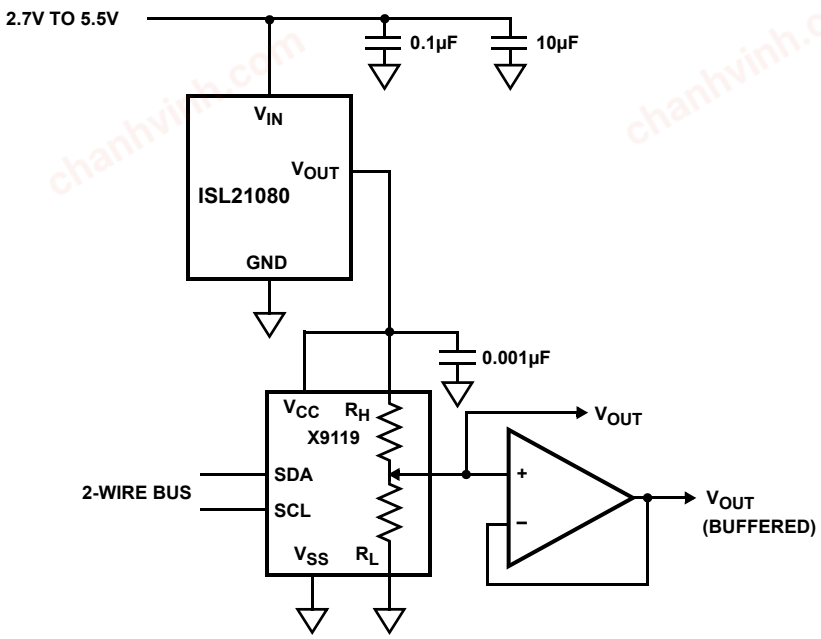

FIGURE 46. 2.5V FULL SCALE LOW-DRIFT 10-BIT ADJUSTABLE VOLTAGE SOURCE

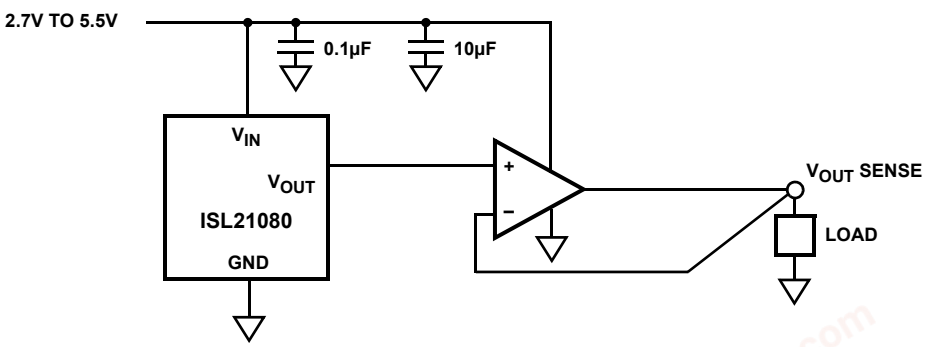

FIGURE 47. KELVIN SENSED LOAD

chanhvinh.com

Revision History

The revision history provided is for informational purposes only and is believed to be accurate, but not warranted. Please visit our website to make sure you have the latest revision.

DATE	REVISION	CHANGE
Sep 28, 2018	FN6934.7	Added evaluation board part numbers to Ordering Information table. Updated Figure 26, "Z_{OUT} vs FREQUENCY, I_{OUT} = 2mA," on page 13 (the lower frequency responses were changed for Output impedance with Iout = 2mA). Updated Figure 27 (minor grid lines were added). Added "Output Impedance vs Load Current" on page 16.
Mar 26, 2018	FN6934.6	Updated Related Literature section. Updated Ordering Information table by adding -T7A part, tape and reel quantity column, and updating package drawing number. Updated Note 5 by fixing the induced error caused from importing new formatting. Changed 70mA to 70µA. Removed About Intersil section. Replaced POD P3.064 with POD P3.064A.
Jun 23, 2014	FN6934.5	Converted to New Template Updated POD with following changes: In Detail A, changed lead width dimension from 0.13+/-0.05 to 0.085-0.19 Changed dimension of foot of lead from 0.31+/-0.10 to 0.38+/-0.10 In Land Pattern, added 0.4 Rad Typ dimension In Side View, changed height of package from 0.91+/-0.03 to 0.95+/-0.07
May, 12, 2010	FN6934.4	Changed Theta JA in the "Thermal Information" on page 3 from 170 to 275. Added Theta JC and applicable note.

chanhvinh.com

Revision History

The revision history provided is for informational purposes only and is believed to be accurate, but not warranted. Please visit our website to make sure you have the latest revision. **(Continued)**

DATE	REVISION	CHANGE
Apr 29, 2010	FN6934.3	Incorrect Thermal information, needs to be re-evaluated and added at a later date when the final data is available. Removed Theta JC and applicable note from "Thermal Information" on page 3.
Apr 14, 2010		Corrected y axis label on Figure 9 from "V_{OUT} (V)" to "V_{OUT} (µV)"
Apr 6, 2010		Source/sink for 0.9V option changed from 7mA to 10mA Line regulation condition for 0.9V changed from 2.7V to 2V Line regulation typical for 0.9V option changed from 10 to 30µV/V ΔT_A in Thermal Hysterisis conditions of 0.9V option changed from 165°C to 125°C Moved "Board Assembly Considerations" and "Special Applications Considerations" to page 15. Deleted "Handling and Board Mounting" section since "Board Assembly Considerations" on page 15 contains same discussion. Added "Special Note: Post-assembly X-ray inspection may lead to permanent changes in device output voltage and should be minimized or avoided." to "ISL21080" on page 1 Figures 2 and 3 revised to show line regulation and Iin down to 2V. Figures 4 and 5 revised to show Vin down to 2V. Added "Initial accuracy can change 10mV or more under extreme radiation." to Note 9 on page 8.
Apr 1, 2010		1. page 3: Change Vin Min from 2.7 to 2.0 2. page 3: Change Iin Typ from 0.31 to 0.35 3. page 3: Change Line Reg Typ from 80 to 10 4. page 3: Change Load Reg Condition from 7mA to 10mA and -7mA to -10mA 5. page 3: Change Load Reg Typ for Source from 25 to 6 and Sink from 50 to 23. 6. page 3: Change Isc Typ from 50 to 30 7. page 3: Change tR from 4 to 1 8. Change Ripple Rejection typ for all options from -30 to -40 9. page 3: Change eN typ from 30 to 40V 10. page 3: Change VN typ from 50 to 10V 11. page 3: Change Noise Density typ from 1.1 to 2.2 12. page 3: Change Long Term Stability from 50 to 60 13. Added Figure 2 to 13 on page 9 to page 10 for 0.9V curves. 14. Added Figure 28 to 34 on page 13 to page 14 for other options Dropout curve. 15. page 1: Change Input Voltage Range for 0.9V option from TBD to 2V to 5.5V 16. Added latch up to "Absolute Maximum Ratings" on page 3 17. Added Junction Temperature to "Thermal Information" on page 3 18. Added JEDEC standards used at the time of testing for "ESD Ratings" on page 3 19. HBM in "Absolute Maximum Ratings" on page 3 changed from 5.5kV to 5kV 20. Added Theta JC and applicable note.
Mar 25, 2010		Throughout- Converted to new format. Changes made as follows: Moved "Pin Configuration" and "Pin Descriptions" to page 2 Added "Related Literature" to page 1 Added key selling feature graphic Figure 1 to page 1 Added "Boldface limits apply..." note to common conditions of Electrical Specifications tables on page 3 through page 8. Bolded applicable specs. Added Note 13 to MIN MAX columns of all Electrical Specifications tables. Added ""Environmental Operating Conditions" to page 3 and added Note 5 Added "The process used for these reference devices is a floating gate CMOS process, and the amplifier circuitry uses CMOS transistors for amplifier and output transistor circuitry. While providing excellent accuracy, there are limitations in output noise level and load regulation due to the MOS device characteristics. These limitations are addressed with circuit techniques discussed in other sections." on page 15

chanhvinh.com

Revision History

The revision history provided is for informational purposes only and is believed to be accurate, but not warranted. Please visit our website to make sure you have the latest revision. **(Continued)**

DATE	REVISION	CHANGE
Oct 14, 2009	FN6934.2	1. Removed “Coming Soon” on page 1 and 2 for -10, -20, -41, and -50 options. 2. Page 1. Moved “ISL21080-505.5V to 8.0V" from bullet to sub-bullet. 3. Update package outline drawing P3.064 to most recent revision. Updates to package were to add land pattern and move dimensions from table onto drawing (no change to package dimensions)
Sep 04, 2009	FN6934.1	**Converted to new Intersil template.** Added Revision History and Products Information. Updated Ordering Information to match Intrepid, numbered all notes and added Moisture Sensitivity Note with links. Moved Pin Descriptions to page 1 to follow pinout **Changed** in Features Section **From:** Reference Output Voltage1.25V, 1.5V, 2.500V, 3.300V **To:** Reference Output Voltage 0.900V, 1.024V, 1.250V, 1.500V, 2.048V, 2.500V, 3.000V, 3.300V, 4.096V, 5.000V **From:** Initial Accuracy: 1.5V±0.5% **To:** Initial Accuracy: ISL21080-09 and -10±0.7% ISL21080-12 ±0.6% ISL21080-15±0.5% ISL21080-20 and -25±0.3% ISL21080-30, -33, -41, and -50±0.2% **FROM:** Input Voltage Range ISL21080-12 (Coming Soon)2.7V to 5.5V ISL21080-152.7V to 5.5V ISL21080-25 (Coming Soon)2.7V to 5.5V ISL21080-33 (Coming Soon)3.5V to 5.5V **TO:** Input Voltage Range: ISL21080-09, -10, -12, -15, -20, and -252.7V to 5.5V ISL21080-09, -10, and 20 (Coming Soon) ISL21080-303.2V to 5.5V ISL21080-333.5V to 5.5V ISL21080-41 (Coming Soon)4.5V to 8.0V **Added:** ISL21080-50 (Coming Soon)5.5V to 8.0V Output Voltage Noise 30µVP-P (0.1Hz to 10Hz) **Updated** Electrical Spec Tables by Tables with Voltage References 9, 10, 12, 20, 25, 30, 33 and 41. **Added** to Abs Max Ratings: VIN to GND (ISL21080-41 and 50 only-0.5V to +10V VOUT to GND (10s) (ISL21080-41 and 50 only-0.5V to +5.1V **Changed** Tja in Thermal information from “202.70” to **“170”** to match ASYD in Intrepid **Added** Note: Post-assembly X-ray inspection may also lead to permanent changes in device output voltage and should be minimized or avoided. Most inspection equipment will not affect the FGA reference voltage, but if X-ray inspection is required, it is advisable to monitor the reference output voltage to verify excessive shift has not occurred. **Added** Special Applications Considerations Section on page 12.
Jul 28, 2009	FN6934.0	Initial Release.

chanhvinh.com

Package Outline Drawing

P3.064A

3 LEAD SMALL OUTLINE TRANSISTOR PLASTIC PACKAGE (SOT23-3)

Rev 0, 7/14

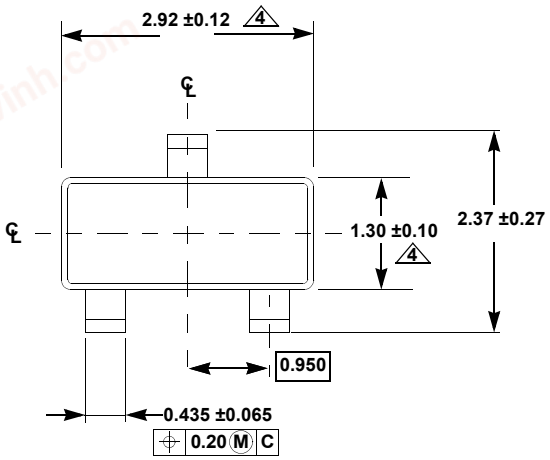

TOP VIEW

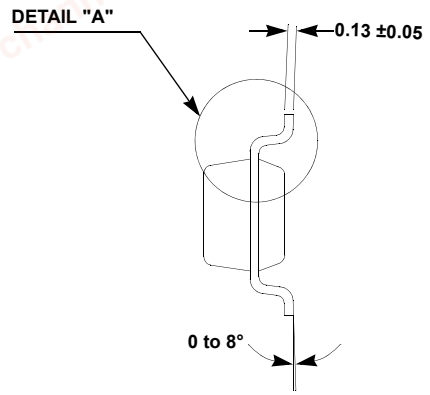

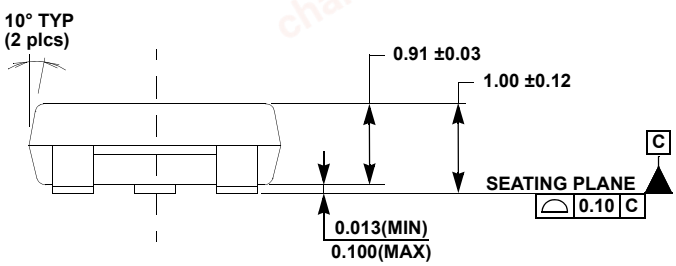

SIDE VIEW

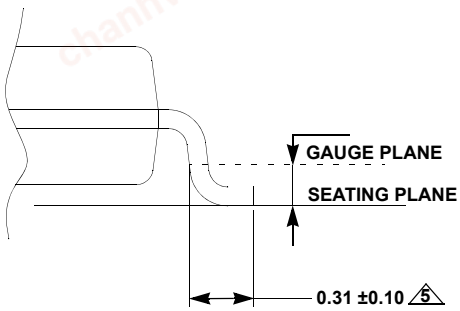

DETAIL "A"

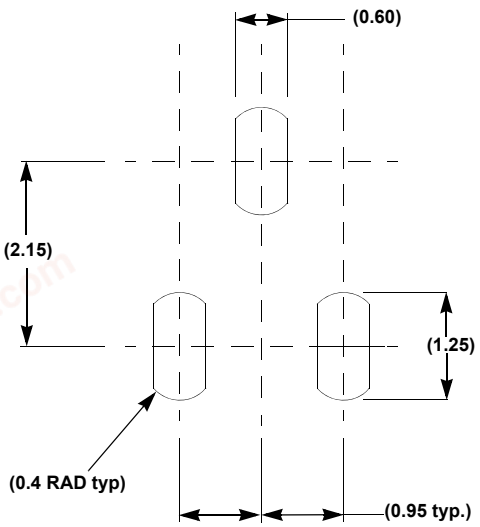

TYPICAL RECOMMENDED LAND PATTERN

NOTES:

1. Dimensions are in millimeters.
   Dimensions in ( ) for Reference Only.
2. Dimensioning and tolerancing conform to ASME Y14.5M-1994.
3. Reference JEDEC TO-236.
4. Dimension does not include interlead flash or protrusions.
   Interlead flash or protrusions shall not exceed 0.25mm per side.
5. Footlength is measured at reference to gauge plane.

chanhvinh.com

Notice

1. Descriptions of circuits, software and other related information in this document are provided only to illustrate the operation of semiconductor products and application examples. You are fully responsible for the incorporation or any other use of the circuits, software, and information in the design of your product or system. Renesas Electronics disclaims any and all liability for any losses and damages incurred by you or third parties arising from the use of these circuits, software, or information.
2. Renesas Electronics hereby expressly disclaims any warranties against and liability for infringement or any other claims involving patents, copyrights, or other intellectual property rights of third parties, by or arising from the use of Renesas Electronics products or technical information described in this document, including but not limited to, the product data, drawings, charts, programs, algorithms, and application examples.
3. No license, express, implied or otherwise, is granted hereby under any patents, copyrights or other intellectual property rights of Renesas Electronics or others.
4. You shall not alter, modify, copy, or reverse engineer any Renesas Electronics product, whether in whole or in part. Renesas Electronics disclaims any and all liability for any losses or damages incurred by you or third parties arising from such alteration, modification, copying or reverse engineering.
5. Renesas Electronics products are classified according to the following two quality grades: “Standard” and “High Quality”. The intended applications for each Renesas Electronics product depends on the product’s quality grade, as indicated below.

   "Standard": Computers; office equipment; communications equipment; test and measurement equipment; audio and visual equipment; home electronic appliances; machine tools; personal electronic equipment; industrial robots; etc.

   "High Quality": Transportation equipment (automobiles, trains, ships, etc.); traffic control (traffic lights); large-scale communication equipment; key financial terminal systems; safety control equipment; etc.

   Unless expressly designated as a high reliability product or a product for harsh environments in a Renesas Electronics data sheet or other Renesas Electronics document, Renesas Electronics products are not intended or authorized for use in products or systems that may pose a direct threat to human life or bodily injury (artificial life support devices or systems; surgical implantations; etc.), or may cause serious property damage (space system; undersea repeaters; nuclear power control systems; aircraft control systems; key plant systems; military equipment; etc.). Renesas Electronics disclaims any and all liability for any damages or losses incurred by you or any third parties arising from the use of any Renesas Electronics product that is inconsistent with any Renesas Electronics data sheet, user’s manual or other Renesas Electronics document.
6. When using Renesas Electronics products, refer to the latest product information (data sheets, user’s manuals, application notes, “General Notes for Handling and Using Semiconductor Devices” in the reliability handbook, etc.), and ensure that usage conditions are within the ranges specified by Renesas Electronics with respect to maximum ratings, operating power supply voltage range, heat dissipation characteristics, installation, etc. Renesas Electronics disclaims any and all liability for any malfunctions, failure or accident arising out of the use of Renesas Electronics products outside of such specified ranges.
7. Although Renesas Electronics endeavors to improve the quality and reliability of Renesas Electronics products, semiconductor products have specific characteristics, such as the occurrence of failure at a certain rate and malfunctions under certain use conditions. Unless designated as a high reliability product or a product for harsh environments in a Renesas Electronics data sheet or other Renesas Electronics document, Renesas Electronics products are not subject to radiation resistance design. You are responsible for implementing safety measures to guard against the possibility of bodily injury, injury or damage caused by fire, and/or danger to the public in the event of a failure or malfunction of Renesas Electronics products, such as safety design for hardware and software, including but not limited to redundancy, fire control and malfunction prevention, appropriate treatment for aging degradation or any other appropriate measures. Because the evaluation of microcomputer software alone is very difficult and impractical, you are responsible for evaluating the safety of the final products or systems manufactured by you.
8. Please contact a Renesas Electronics sales office for details as to environmental matters such as the environmental compatibility of each Renesas Electronics product. You are responsible for carefully and sufficiently investigating applicable laws and regulations that regulate the inclusion or use of controlled substances, including without limitation, the EU RoHS Directive, and using Renesas Electronics products in compliance with all these applicable laws and regulations. Renesas Electronics disclaims any and all liability for damages or losses occurring as a result of your noncompliance with applicable laws and regulations.
9. Renesas Electronics products and technologies shall not be used for or incorporated into any products or systems whose manufacture, use, or sale is prohibited under any applicable domestic or foreign laws or regulations. You shall comply with any applicable export control laws and regulations promulgated and administered by the governments of any countries asserting jurisdiction over the parties or transactions.
10. It is the responsibility of the buyer or distributor of Renesas Electronics products, or any other party who distributes, disposes of, or otherwise sells or transfers the product to a third party, to notify such third party in advance of the contents and conditions set forth in this document.
11. This document shall not be reprinted, reproduced or duplicated in any form, in whole or in part, without prior written consent of Renesas Electronics.
12. Please contact a Renesas Electronics sales office if you have any questions regarding the information contained in this document or Renesas Electronics products.

(Note 1) “Renesas Electronics” as used in this document means Renesas Electronics Corporation and also includes its directly or indirectly controlled subsidiaries.

(Note 2) “Renesas Electronics product(s)” means any product developed or manufactured by or for Renesas Electronics.

(Rev.4.0-1 November 2017)

RENESAS

SALES OFFICES

Renesas Electronics Corporation

http://www.renesas.com

Refer to "http://www.renesas.com/" for the latest and detailed information.

Renesas Electronics Corporation
TOYOSU FORESIA, 3-2-24 Toyosu, Koto-ku, Tokyo 135-0061, Japan

Renesas Electronics America Inc.
1001 Murphy Ranch Road, Milpitas, CA 95035, U.S.A.
Tel: +1-408-432-8888, Fax: +1-408-434-5351

Renesas Electronics Canada Limited
9251 Yonge Street, Suite 8309 Richmond Hill, Ontario Canada L4C 9T3
Tel: +1-905-237-2004

Renesas Electronics Europe Limited
Dukes Meadow, Millboard Road, Bourne End, Buckinghamshire, SL8 5FH, U.K
Tel: +44-1628-651-700

Renesas Electronics Europe GmbH
Arcadiastrasse 10, 40472 Düsseldorf, Germany
Tel: +49-211-6503-0, Fax: +49-211-6503-1327

Renesas Electronics (China) Co., Ltd.
Room 1709 Quantum Plaza, No.27 ZhichunLu, Haidian District, Beijing, 100191 P. R. China
Tel: +86-10-8235-1155, Fax: +86-10-8235-7679

Renesas Electronics (Shanghai) Co., Ltd.
Unit 301, Tower A, Central Towers, 555 Langao Road, Putuo District, Shanghai, 200333 P. R. China
Tel: +86-21-2226-0888, Fax: +86-21-2226-0999

Renesas Electronics Hong Kong Limited
Unit 1601-1611, 16/F., Tower 2, Grand Century Place, 193 Prince Edward Road West, Mongkok, Kowloon, Hong Kong
Tel: +852-2265-6688, Fax: +852 2886-9022

Renesas Electronics Taiwan Co., Ltd.
13F, No. 363, Fu Shing North Road, Taipei 10543, Taiwan
Tel: +886-2-8175-9600, Fax: +886 2-8175-9670

Renesas Electronics Singapore Pte. Ltd.
80 Bendemeer Road, Unit #06-02 Hyflux Innovation Centre, Singapore 339949
Tel: +65-6213-0200, Fax: +65-6213-0300

Renesas Electronics Malaysia Sdn.Bhd.
Unit 1207, Block B, Menara Amcorp, Amcorp Trade Centre, No. 18, Jln Persiaran Barat, 46050 Petaling Jaya, Selangor Darul Ehsan, Malaysia
Tel: +60-3-7955-9390, Fax: +60-3-7955-9510

Renesas Electronics India Pvt. Ltd.
No.777C, 100 Feet Road, HAL 2nd Stage, Indiranagar, Bangalore 560 038, India
Tel: +91-80-67208700, Fax: +91-80-67208777

Renesas Electronics Korea Co., Ltd.
17F, KAMCO Yangjae Tower, 262, Gangnam-daero, Gangnam-gu, Seoul, 06265 Korea
Tel: +82-2-558-3737, Fax: +82-2-558-5338

© 2018 Renesas Electronics Corporation. All rights reserved.

Colophon 7.2