chanhvinh.com

Datasheet

ICL3237E

±15kV ESD Protected, 10nA Supply-Current, +3V to +5.5V, 250k/1Mbps, RS-232 Transmitters/Receivers

The ICL3237E contains 3.0V to 5.5V powered RS-232 transmitters/receivers that meet EIA/TIA-232 and V.28/V.24 specifications, even at V_{CC} = 3.0V. It provides ±15kV ESD protection (IEC61000-4-2 Air Gap and Human Body Model) on transmitter outputs and receiver inputs (RS-232 pins). Targeted applications are cell phones, PDAs, Palmtops, and notebook and laptop computers where the low operational power and even lower standby power consumption is critical. Efficient on-chip charge pumps coupled with the manual powerdown function reduce the standby supply current to a 10nA trickle. Small footprint packaging and the use of small, low value capacitors ensure board space savings. Data rates greater than 1Mbps (MBAUD = V_{CC}) are ensured at worst case load conditions. The ICL3237E is fully compatible with 3.3V only systems, mixed 3.3V and 5.0V systems, and 5.0V only systems.

The ICL3237E is a 5 driver, 3 receiver device that also includes a noninverting always-active receiver for “wake-up” capability.

Table 1 summarizes the features of the ICL3237E. Application Note AN9863 summarizes the features of each device comprising the ICL32xx RS-232 3V family.

Related Literature

For a full list of related documents, visit our website:

- ICL3237E device page

Features

- Pb-free (RoHS compliant)
- ESD protection for RS-232 I/O pins to ±15kV (IEC61000)
- Pin compatible replacement for MAX3237E
- Pin selectable, ensured data rate: 250kbps/1Mbps
- Meets EIA/TIA-232 and V.28/V.24 specifications at 3V
- RS-232 compatible with V_{CC} = 2.7V
- Latch-up free
- On-chip voltage converters require only four external capacitors
- Manual powerdown feature
- Flow through pinout
- Rx and Tx hysteresis for improved noise immunity
- Rx active in powerdown; separate Rx Enable pin
- Guaranteed minimum slew rate: 6V/µs or 24V/µs
- Wide power supply range: Single +3V to +5.5V
- Low supply current in powerdown state: 10nA

Applications

- Any system requiring RS-232 communication ports
  - Battery powered, hand-held, and portable equipment
  - Laptop computers, notebooks, and Palmtops
  - Modems, printers and other peripherals
  - Data cradles and cables
  - Cellular/mobile phones

Table 1. Summary of Features

Part Number	No. of Tx.	No. of Rx.	No. of Monitor Rx. (R_{OUTB})	Data Rate (kbps) (Note 1)	Rx. Enable Function?	Ready Output?	Manual Powerdown?	Automatic Powerdown Function?
ICL3237E	5	3	1	250/1000	Yes	No	Yes	No

Note:
1. Data rate is selectable with the MBAUD pin.

chanhvinh.com

Contents

1. Overview . . . 3
1.1 Typical Operating Circuit . . . 3
1.2 Ordering Information . . . 4
1.3 Pinout . . . 4
1.4 Pin Descriptions . . . 4

2. Specifications . . . 6
2.1 Absolute Maximum Ratings . . . 6
2.2 Thermal Information . . . 6
2.3 Recommended Operating Conditions . . . 6
2.4 Electrical Specifications . . . 6

3. Typical Performance Curves . . . 9

4. Detailed Description . . . 11
4.1 Charge Pump . . . 11
4.1.1 Charge Pump Abs Max Ratings . . . 11
4.2 Transmitters . . . 12
4.3 Receivers . . . 12
4.4 Operation Down to 2.7V . . . 13
4.5 Powerdown Functionality . . . 13
4.5.1 Software Controlled (Manual) Powerdown . . . 13
4.6 Capacitor Selection . . . 13
4.7 Receiver ENABLE Control . . . 14
4.8 MegaBaud Selection . . . 15
4.9 Power Supply Decoupling . . . 15
4.10 Transmitter Outputs when Exiting Powerdown . . . 15
4.11 High Data Rates . . . 16
4.12 Interconnection with 3V and 5V Logic . . . 16

5. ±15kV ESD Protection . . . 17
5.1 Human Body Model (HBM) Testing . . . 17
5.2 IEC61000-4-2 Testing . . . 17
5.3 Air-Gap Discharge Test Method . . . 17
5.4 Contact Discharge Test Method . . . 17

6. Die Characteristics . . . 18

7. Revision History . . . 19

8. Package Outline Drawing . . . 20

chanhvinh.com

1. Overview

1.1 Typical Operating Circuit

ICL3237E

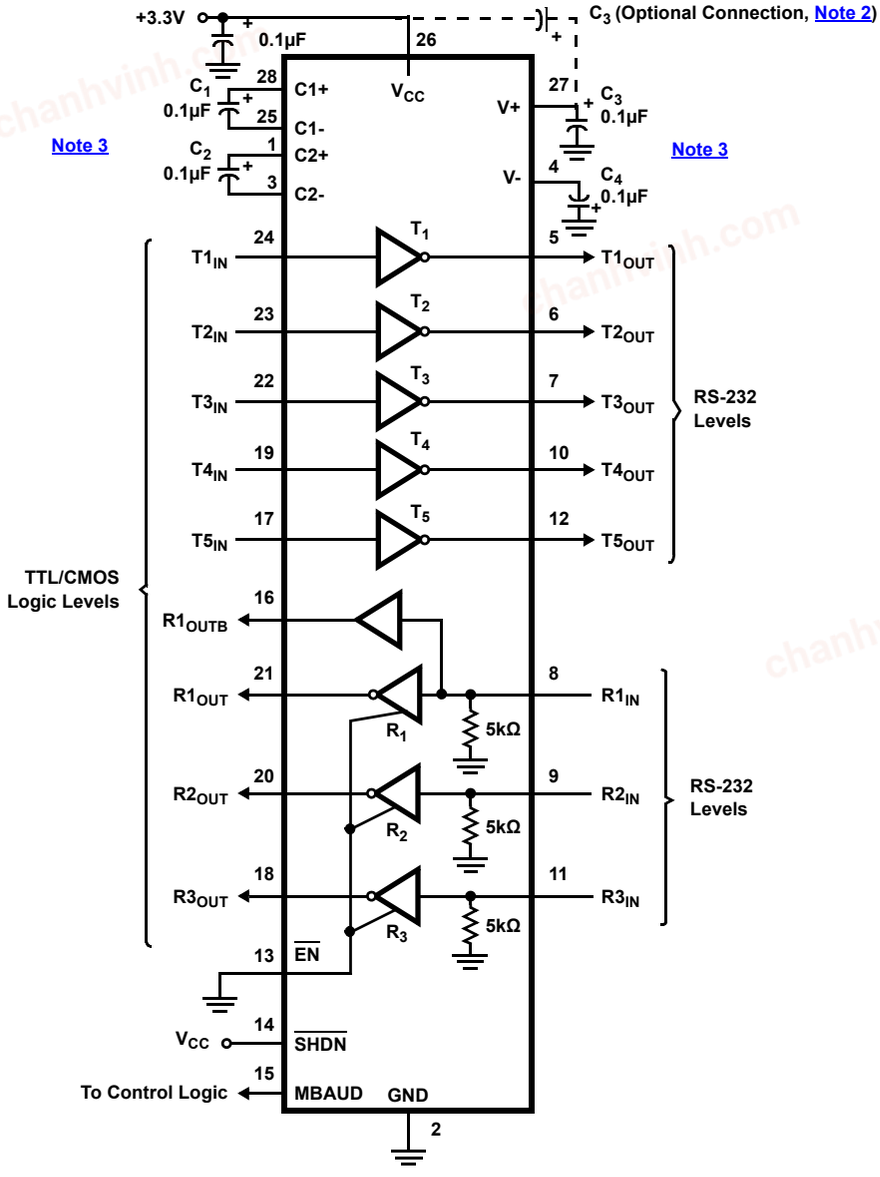

Notes:

2. The negative terminal of C_3 can be connected to either V_{CC} or GND.
3. For V_{CC} = 3.15V (3.3V -5%), Use C_1 - C_4 = 0.1µF or Greater. For V_{CC} = 3.0V (3.3V - 10%), Use C_1 - C_4 = 0.22µF.

chanhvinh.com

1.2 Ordering Information

Part Number (Notes 5, 6)	Part Marking	Temp. Range (°C)	Tape and Reel (Units) (Note 4)	Package (RoHS Compliant)	Pkg. Dwg. #
ICL3237ECAZ	ICL3237 ECAZ	0 to +70	-	28 Ld SSOP	M28.209
ICL3237ECAZ-T	ICL3237 ECAZ	0 to +70	1k	28 Ld SSOP	M28.209
ICL3237EIAZ	ICL3237 EIAZ	-40 to +85		28 Ld SSOP	M28.209
ICL3237EIAZ-T	ICL3237 EIAZ	-40 to +85	1k	28 Ld SSOP	M28.209

Notes:

4. See TB347 for details about reel specifications.
5. These Pb-free plastic packaged products employ special Pb-free material sets; molding compounds/die attach materials and NiPdAu-Ag plate - e4 termination finish, which is RoHS compliant and compatible with both SnPb and Pb-free soldering operations. Pb-free products are MSL classified at Pb-free peak reflow temperatures that meet or exceed the Pb-free requirements of IPC/JEDEC J STD-020.
6. For Moisture Sensitivity Level (MSL), see the ICL3237E device page. For more information about MSL, see TB363.

1.3 Pinout

28 Ld SSOP
Top View

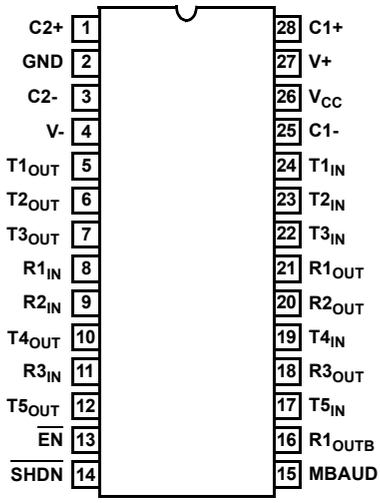

1.4 Pin Descriptions

Pin	Function
V_{CC}	System power supply input (3.0V to 5.5V).
V+	Internally generated positive transmitter supply (+5.5V).
V-	Internally generated negative transmitter supply (-5.5V).
GND	Ground connection.
C1+	External capacitor (voltage doubler) is connected to this lead.
C1-	External capacitor (voltage doubler) is connected to this lead.
C2+	External capacitor (voltage inverter) is connected to this lead.
C2-	External capacitor (voltage inverter) is connected to this lead.
T_{IN}	TTL/CMOS compatible transmitter Inputs (Note 7).
T_{OUT}	±15kV ESD protected, RS-232 level (nominally ±5.5V) transmitter outputs.
R_{IN}	±15kV ESD protected, RS-232 compatible receiver inputs.
R_{OUT}	TTL/CMOS level receiver outputs.
R_{OUTB}	TTL/CMOS level, noninverting, always enabled receiver output.

chanhvinh.com

Pin	Function
$\overline{EN}$	Active low receiver enable control; doesn't disable R_{OUTB} output (Note 7).
$\overline{SHDN}$	Active low input to shut down transmitters and on-board power supply, to place device in low power mode (Note 7).
MBAUD	Input low selects the 250kbps data rate. Input high selects the 1Mbps data rate (Note 7).

Note:
7. These input pins incorporate positive feedback resistors. When the input is driven to a valid logic level, the feedback resistor maintains that logic level until V_{CC} is removed.

chanhvinh.com

2. Specifications

2.1 Absolute Maximum Ratings

Parameter	Minimum	Maximum	Unit
V_{CC} to GND	-0.3	+6	V
V+ to GND	-0.3	+7	V
V- to GND	+0.3	-7	V
V+ to V-		+14	V
Input Voltages			
T_{IN}, $\overline{EN}$, $\overline{SHDN}$, MBAUD	-0.3	+6	V
R_{IN}		±25	V
Output Voltages			
T_{OUT}		±13.2	V
R_{OUT}	-0.3	V_{CC} + 0.3	V
Short-Circuit Duration			
T_{OUT}	Continuous		
ESD Rating	See "ESD Rating" on page 6		

CAUTION: Do not operate at or near the maximum ratings listed for extended periods of time. Exposure to such conditions can adversely impact product reliability and result in failures not covered by warranty.

2.2 Thermal Information

Thermal Resistance (Typical) (Note 8)	θ_{JA} (°C/W)
28 Ld SSOP Package	100

Note:
8. θ_{JA} is measured with the component mounted on a low-effective thermal conductivity test board in free air. See TB379 for details.

Parameter	Minimum	Maximum	Unit
Maximum Junction Temperature (Plastic Package)		+150	°C
Maximum Storage Temperature Range	-65	+150	°C
Pb-Free Reflow Profile	see TB493		

2.3 Recommended Operating Conditions

Parameter	Minimum	Maximum	Unit
Temperature Range			
ICL3237ECx	0	+70	°C
ICL3237EIx	-40	+85	°C

2.4 Electrical Specifications

Test Conditions: V_{CC} = 3.15V to 5.5V, C_1 - C_4 = 0.1µF; V_{CC} = 3V, C_1 - C_4 = 0.22µF, unless otherwisespecified. Typicals are at T_A = 25°C

Parameter	Test Conditions	Temp (°C)	Min	Typ	Max	Unit
DC Characteristics						
Supply Current, Powerdown Disabled	All Outputs Unloaded, V_{CC} = 3.15V, $\overline{SHDN}$ = V_{CC}	25	-	0.3	1.0	mA
Supply Current, Powerdown	$\overline{SHDN}$ = GND	25	-	10	300	nA

chanhvinh.com

Test Conditions: V_{CC} = 3.15V to 5.5V, C_1 - C_4 = 0.1µF; V_{CC} = 3V, C_1 - C_4 = 0.22µF, unless otherwisespecified. Typicals are at T_A = 25ºC

Parameter	Test Conditions			Temp (°C)	Min	Typ	Max	Unit
Logic and Transmitter Inputs and Receiver Outputs								
Input Logic Threshold Low	T_{IN}, $\overline{EN}$, $\overline{SHDN}$, MBAUD			Full	-	-	0.8	V
Input Logic Threshold High	T_{IN}, $\overline{EN}$, $\overline{SHDN}$, MBAUD	V_{CC} = 3.3V		Full	2.0	-	-	V
		V_{CC} = 5.0V		Full	2.4	-	-	V
Transmitter Input Hysteresis				25	-	0.5	-	V
Input Leakage Current	T_{IN}, $\overline{EN}$, $\overline{SHDN}$, MBAUD (Note 10)			Full	-	±0.01	±1.0	µA
Output Leakage Current	$\overline{EN}$ = V_{CC} (Receivers Disabled)			Full	-	±0.05	±10	µA
Output Voltage Low	I_{OUT} = 1.6mA			Full	-	-	0.4	V
Output Voltage High	I_{OUT} = -1.0mA			Full	V_{CC} -0.6	V_{CC} -0.1	-	V
Receiver Inputs								
Input Voltage Range				Full	-25	-	25	V
Input Threshold Low	V_{CC} = 3.3V			25	0.6	1.2	-	V
	V_{CC} = 5.0V			25	0.8	1.5	-	V
Input Threshold High	V_{CC} = 3.3V to 5.0V			25	-	1.6	2.4	V
Input Hysteresis				25	-	0.5	-	V
Input Resistance				25	3	5	7	kΩ
Transmitter Outputs								
Output Voltage Swing	All Transmitter Outputs Loaded with 3kΩ to Ground			Full	±5.0	±5.4	-	V
Output Resistance	V_{CC} = V+ = V- = 0V, Transmitter Output = ±2V			Full	300	10M	-	Ω
Output Short-Circuit Current				Full	-	±35	±60	mA
Output Leakage Current	V_{OUT} = ±12V, V_{CC} = 0V or 3V to 5.5V, $\overline{SHDN}$ = GND			Full	-	-	±25	µA
Timing Characteristics								
Maximum Data Rate	R_L = 3kΩ, One Transmitter Switching	C_L = 1000pF	MBAUD = GND	Full	250	700	-	kbps
		V_{CC} = 3V to 4.5V, C_L = 250pF	MBAUD = V_{CC}	Full	1000	1700	-	kbps
		V_{CC} = 4.5V to 5.5V, C_L = 1000pF	MBAUD = V_{CC}	Full	1000	1100	-	kbps
Receiver Propagation Delay	Receiver Input to Receiver Output, C_L = 150pF	t_{PHL}		25	-	0.15	-	µs
		t_{PLH}		25	-	0.15	-	µs
Receiver Output Enable Time	Normal Operation			25	-	200	-	ns
Receiver Output Disable Time	Normal Operation			25	-	200	-	ns
Transmitter Skew	t_{PHL} - t_{PLH}, Note 9	MBAUD = GND		25	-	100		ns
		MBAUD = V_{CC}, V_{CC} = 3.0V		25	-	25		ns
Receiver Skew	t_{PHL} - t_{PLH}, C_L = 150pF			25	-	50	-	ns
Transition Region Slew Rate	V_{CC} = 3.3V, R_L = 3kΩ to 7kΩ, Measured From 3V to -3V or -3V to 3V	C_L = 150pF to 1000pF	MBAUD = GND	25	6	17	30	V/µs
			MBAUD = V_{CC}	25	24	40	150	V/µs
		C_L = 150pF to 2500pF	MBAUD = GND	25	4	12	30	V/µs

chanhvinh.com

Test Conditions: V_{CC} = 3.15V to 5.5V, C_1 - C_4 = 0.1µF; V_{CC} = 3V, C_1 - C_4 = 0.22µF, unless otherwisespecified. Typicals are at T_A = 25ºC

Parameter	Test Conditions	Temp (°C)	Min	Typ	Max	Unit
ESD Performance						
RS-232 Pins (T_{OUT}, R_{IN})	Human Body Model	25	-	±15	-	kV
	IEC61000-4-2 Air Gap Discharge	25	-	±15	-	kV
	IEC61000-4-2 Contact Discharge	25	-	±8	-	kV
All Other Pins	Human Body Model	25	-	±2.5	-	kV

Notes:

9. Skew is measured at the input switching points (1.4V).
10. These inputs use a positive feedback resistor. The input current is negligible when the input is at either supply rail.

chanhvinh.com

3. Typical Performance Curves

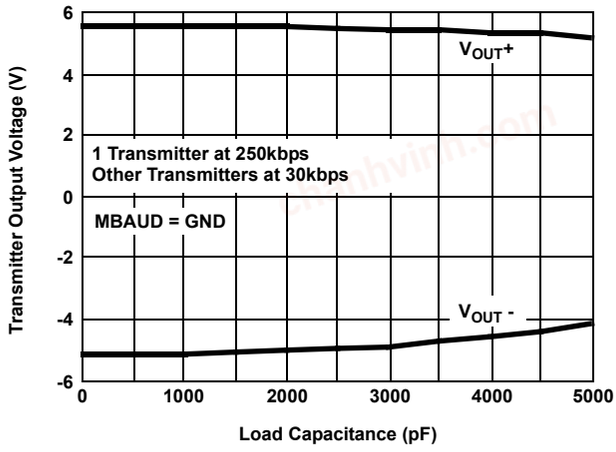

Figure 1. Low Speed Transmitter Output Voltage vs Load Capacitance

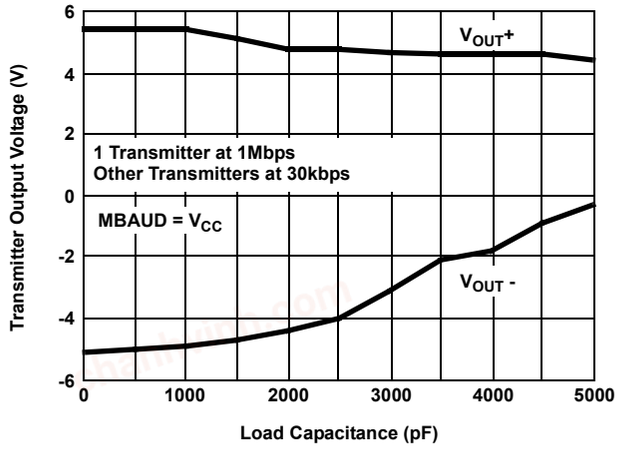

Figure 2. High Speed Transmitter Output Voltage vs Load Capacitance

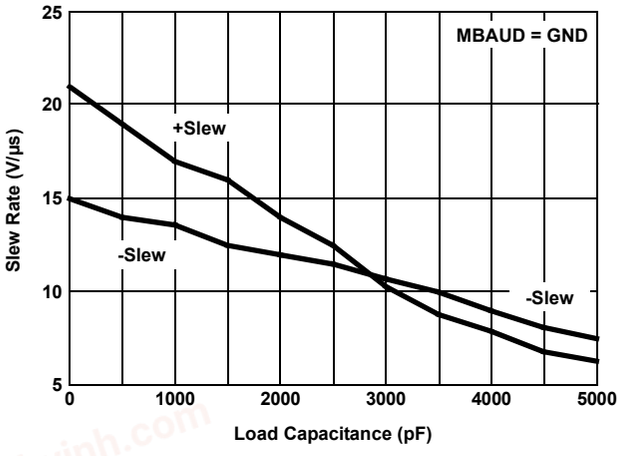

Figure 3. Low Speed Slew Rate vs Load Capacitance

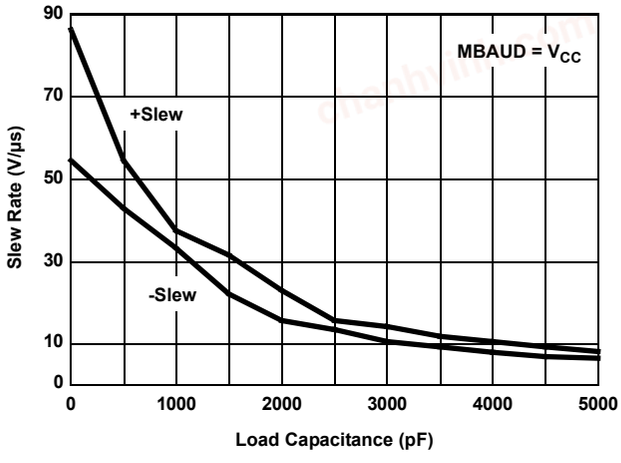

Figure 4. High Speed Slew Rate vs Load Capacitance

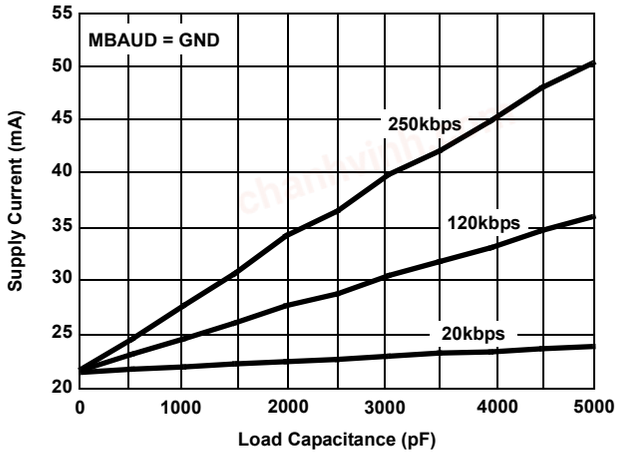

Figure 5. Low Speed Supply Current vs Load Capacitance When Transmitting Data

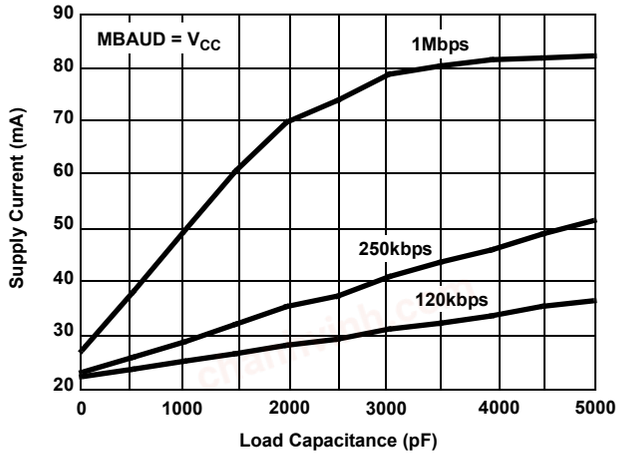

Figure 6. High Speed Supply Current vs Load Capacitance When Transmitting Data

chanhvinh.com

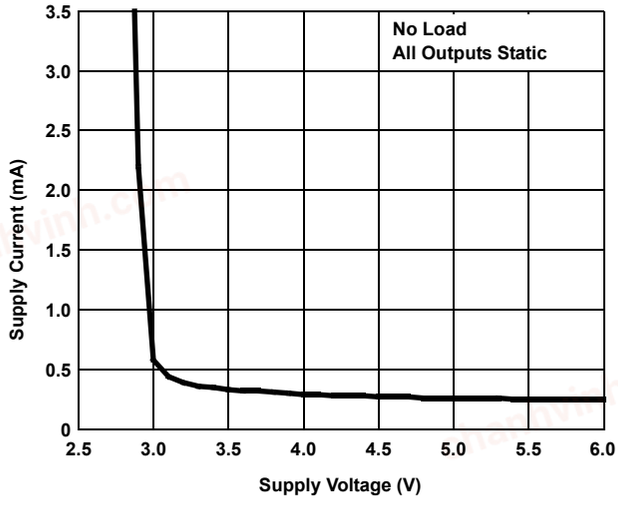

Figure 7. Supply Current vs Supply Voltage

chanhvinh.com

4. Detailed Description

The ICL3237E operates from a single +3V to +5.5V supply, ensures a 1Mbps minimum data rate (MBAUD = V_{CC}), requires only four small external 0.1µF (0.22µF for V_{CC} = 3.0V) capacitors, features low power consumption, and meets all EIA/TIA-232 and V.28 specifications.

4.1 Charge Pump

The ICL32xx family uses regulated on-chip dual charge pumps as voltage doublers. It uses voltage inverters to generate ±5.5V transmitter supplies from a V_{CC} supply as low as 3.0V. The charge pumps allow these devices to maintain RS-232 compliant output levels over the ±10% tolerance range of 3.3V powered systems. The efficient on-chip power supplies require only four small, external 0.1µF capacitors for the voltage doubler and inverter functions at V_{CC} = 3.3V. See the "Capacitor Selection" on page 13 and Table 6 on page 13 for capacitor recommendations for other operating conditions. The charge pumps operate discontinuously (turning off as soon as the V+ and V- supplies are pumped up to the nominal values) and provide significant power savings.

4.1.1 Charge Pump Abs Max Ratings

The ICL3237E is fully characterized for 3.0V to 3.6V operation, and at critical points for 4.5V to 5.5V operation. Furthermore, load conditions were favorable using static logic states only.

The specified maximum values for V+ and V- are +7V and -7V, respectively. These limits apply for V_{CC} values set to 3.0V and 3.6V (see Table 2). For V_{CC} values set to 4.5V and 5.5V, the maximum values for V+ and V- can approach +9V and -7V, respectively (Table 3 on page 12). The breakdown characteristics for V+ and V- were measured with ±13V.

Table 2. V+ and V- Values for V_{CC} = 3.0V to 3.6V

C_1 (µF)	C_2, C_3, C_4 (µF)	Load	T1IN (Logic State)	V+ (V)		V- (V)	
				V_{CC} = 3.0V	V_{CC} = 3.6V	V_{CC} = 3.0V	V_{CC} = 3.6V
0.1	0.1	Open	H	5.80	6.56	-5.60	-5.88
			L	5.80	6.56	-5.60	-5.88
			2.4kbps	5.80	6.56	-5.60	-5.88
		3kΩ // 1000pF	H	5.88	6.60	-5.56	-5.92
			L	5.76	6.36	-5.56	-5.76
			2.4kbps	6.00	6.64	-5.64	-5.96
0.047	0.33	Open	H	5.68	6.00	-5.60	-5.60
			L	5.68	6.00	-5.60	-5.60
			2.4kbps	5.68	6.00	-5.60	-5.60
		3kΩ // 1000pF	H	5.76	6.08	-5.64	-5.64
			L	5.68	6.04	-5.60	-5.60
			2.4kbps	5.84	6.16	-5.64	-5.72
1	1	Open	H	5.88	6.24	-5.60	-5.60
			L	5.88	6.28	-5.60	-5.64
			2.4kbps	5.80	6.20	-5.60	-5.60
		3kΩ // 1000pF	H	5.88	6.44	-5.64	-5.72
			L	5.88	6.04	-5.64	-5.64
			2.4kbps	5.92	6.40	-5.64	-5.64

chanhvinh.com

Table 3. V+ and V- Values for V_{CC} = 4.5V to 5.5V

C_1 (µF)	C_2, C_3, C_4 (µF)	Load	T1IN (Logic State)	V+ (V)		V- (V)	
				V_{CC} = 4.5V	V_{CC} = 5.5V	V_{CC} = 4.5V	V_{CC} = 5.5V
0.1	0.1	Open	H	7.44	8.48	-6.16	-6.40
			L	7.44	8.48	-6.16	-6.44
			2.4kbps	7.44	8.48	-6.17	-6.44
		3kΩ // 1000pF	H	7.76	8.88	-6.36	-6.72
			L	7.08	8.00	-5.76	-5.76
			2.4kbps	7.76	8.84	-6.40	-6.64
0.047	0.33	Open	H	6.44	6.88	-5.80	-5.88
			L	6.48	6.88	-5.84	-5.88
			2.4kbps	6.44	6.88	-5.80	-5.88
		3kΩ // 1000pF	H	6.64	7.28	-5.92	-6.04
			L	6.24	6.60	-5.52	-5.52
			2.4kbps	6.72	7.16	-5.92	-5.96
1	1	Open	H	6.84	7.60	-5.76	-5.76
			L	6.88	7.60	-5.76	-5.76
			2.4kbps	6.92	7.56	-5.72	-5.76
		3kΩ // 1000pF	H	7.28	8.16	-5.80	-5.92
			L	6.44	6.84	-5.64	-6.84
			2.4kbps	7.08	7.76	-5.80	-5.80

The resulting new maximum voltages at V+ and V- are listed in Table 4.

Table 4. New Measured Withstanding Voltages

V+, V- to Ground	±13V
V+ to V-	20V

4.2 Transmitters

The transmitters are proprietary, low dropout, inverting drivers that translate TTL/CMOS inputs to EIA/TIA-232 output levels. The transmitters are coupled with the on-chip ±5.5V supplies tp deliver true RS-232 levels across a wide range of single supply system voltages.

All transmitter outputs disable and assume a high impedance state when the device enters the powerdown mode (see Table 5 on page 13). These outputs can be driven to ±12V when disabled.

The ICL3237E ensures a 1Mbps data rate (MBAUD = V_{CC}) for full load conditions (3kΩ and 250pF), $V_{CC} \geq 3.0V$, with one transmitter operating at full speed. Under more typical conditions of $V_{CC} \geq 3.3V$, C_{1-4} = 0.1µF, R_L = 3kΩ, and C_L = 250pF, one transmitter easily operates at 1.7Mbps.

Transmitter inputs incorporate an active positive feedback resistor that maintains the last driven input state in the absence of a forcing signal. Unused transmitter inputs can remain unconnected.

4.3 Receivers

The ICL3237E contains standard inverting receivers that tri-state only when the $\overline{EN}$ control line is driven high. It also includes a noninverting (monitor) receiver (denoted by the R_{OUTB} label) that is always active, regardless of the state of any control lines. All the receivers convert RS-232 signals to CMOS output levels and accept inputs up to ±25V while presenting the required 3kΩ to 7kΩ input impedance (see Figure 8 on page 13) even if the power is off (V_{CC} = 0V). The receivers' Schmitt trigger input stage uses hysteresis to increase noise immunity and decrease errors due to slow input signal transitions.

chanhvinh.com

Monitor receivers remain active even during manual powerdown and forced receiver disable, which makes them extremely useful for Ring Indicator monitoring. Standard receivers driving powered down peripherals must be disabled to prevent current flow through the peripheral's protection diodes (see Figures 9 and 10). Disabling the receivers prevents them from being used for wake up functions, but the corresponding monitor receiver can be dedicated to this task as shown in Figure 10.

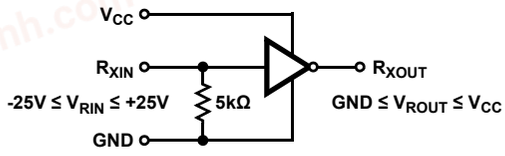

Figure 8. Inverting Receiver Connections

4.4 Operation Down to 2.7V

ICL3237E transmitter outputs meet RS-562 levels (±3.7V) at the full data rate with V_{CC} as low as 2.7V. RS-562 levels typically ensure interoperability with RS-232 devices.

4.5 Powerdown Functionality

The ICL3237E requires a nominal supply current of 0.3mA during normal operation (not in powerdown mode). This supply current is considerably less than the 5mA to 11mA current required of 5V RS-232 devices. The already low current requirement drops significantly when the device enters powerdown mode. In powerdown, supply current drops to 10nA because the on-chip charge pump turns off (V+ collapses to V_{CC}, V- collapses to GND), and the transmitter outputs tri-state. This micro-power mode makes the ICL3237E ideal for battery powered and portable applications.

4.5.1 Software Controlled (Manual) Powerdown

On the ICL3237E, the powerdown control is a simple shutdown pin ($\overline{SHDN}$). Driving $\overline{SHDN}$ high enables normal operation, and driving it low forces the IC into its powerdown state. Connect $\overline{SHDN}$ to V_{CC} if the powerdown function is not needed. **Note:** All the receiver outputs remain enabled during shutdown (see Table 5). For the lowest power consumption during powerdown, disable the receivers by driving the $\overline{EN}$ input high (see "Receiver ENABLE Control" on page 14 and Figures 9 and 10). The time required to exit powerdown and resume transmission is 100µs.

Table 5. Powerdown and Enable Logic Truth Table

$\overline{SHDN}$ Input	$\overline{EN}$ Input	Transmitter Outputs	Receiver Outputs	R_{OUTB} Output	Mode of Operation
L	L	High-Z	Active	Active	Manual Powerdown
L	H	High-Z	High-Z	Active	Manual Powerdown w/Rcvr. Disabled
H	L	Active	Active	Active	Normal Operation
H	H	Active	High-Z	Active	Normal Operation w/Rcvr. Disabled

4.6 Capacitor Selection

The charge pumps require 0.1µF capacitors for 3.3V (5% tolerance) operation. For other supply voltages, see Table 6 for capacitor values. Do not use values smaller than those listed in Table 6. Increasing the capacitor values (by a factor of 2) reduces ripple on the transmitter outputs and slightly reduces power consumption. C_2, C_3, and C_4 can be increased without increasing C_1's value; however, do not increase C_1 without also increasing C_2, C_3, and C_4 to maintain the proper ratios (C_1 to the other capacitors).

Table 6. Required Capacitor Values

V_{CC} (V)	C_1 (µF)	C_2, C_3, C_4 (µF)
3.0 to 3.6 (3.3V ±10%)	0.22	0.22
3.15 to 3.6 (3.3V ±5%)	0.1	0.1

chanhvinh.com

Table 6. Required Capacitor Values (Continued)

V_{CC} (V)	C_1 (µF)	C_2, C_3, C_4 (µF)
4.5 to 5.5	0.047	0.33
3.0 to 5.5	0.22	1.0

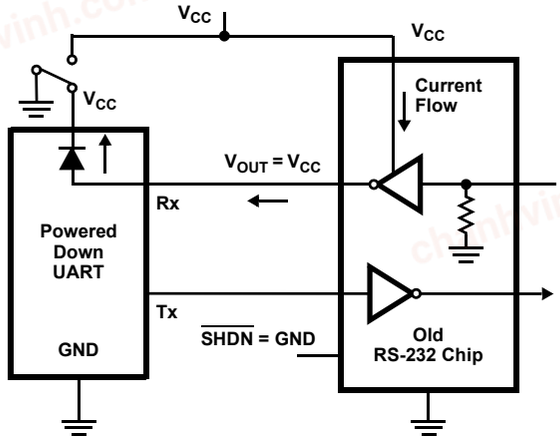

Figure 9. Power Drain Through Powered Down Peripheral

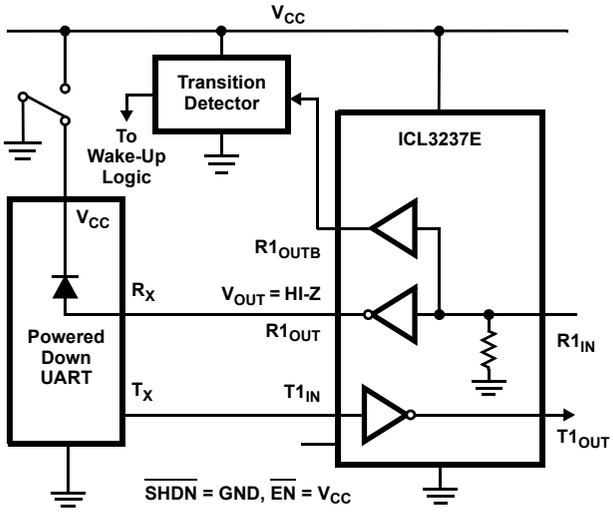

Figure 10. Disabled Receivers Prevent Power Drain

4.7 Receiver ENABLE Control

The ICL3237E features an $\overline{EN}$ input to control the receiver outputs. Driving $\overline{EN}$ high disables all the inverting (standard) receiver outputs and places them in a high impedance state. Disabling the receiver outputs is useful to eliminate supply current, due to a receiver output forward biasing the protection diode when driving the input of a powered down (V_{CC} = GND) peripheral (see Figure 9). The enable input has no effect on transmitter or monitor (R_{OUTB}) outputs.

chanhvinh.com

4.8 MegaBaud Selection

In normal operating mode (MBAUD = GND), the ICL3237E transmitters ensure a 250kbps data rate with worst-case loads of 3kΩ in parallel with 1000pF. This data rate provides compatibility with PC-to-PC communication software such as Laplink.

For higher speed serial communications, the ICL3237E features MegaBaud operation. In MegaBaud operating mode (MBAUD = V_{CC}), the ICL3237E transmitters ensure a 1Mbps data rate with worst-case loads of 3kΩ in parallel with 250pF for 3.0V < V_{CC} < 4.5V. For 5V ±10% operation, the ICL3237E transmitters ensure a 1Mbps data rate with worst-case loads of 3kΩ in parallel with 1000pF.

4.9 Power Supply Decoupling

In most circumstances a 0.1µF bypass capacitor is adequate. In applications that are particularly sensitive to power supply noise, decouple V_{CC} to ground with a capacitor of the same value as the charge pump capacitor C_1. Connect the bypass capacitor as close as possible to the IC.

4.10 Transmitter Outputs when Exiting Powerdown

Figure 11 shows the response of two transmitter outputs when exiting powerdown mode. As the two transmitter outputs activate, they properly go to opposite RS-232 levels with no glitching, ringing, or undesirable transients. Each transmitter is loaded with 3kΩ in parallel with 2500pF. **Note:** The transmitters enable only when the magnitude of the supplies exceed approximately 3V.

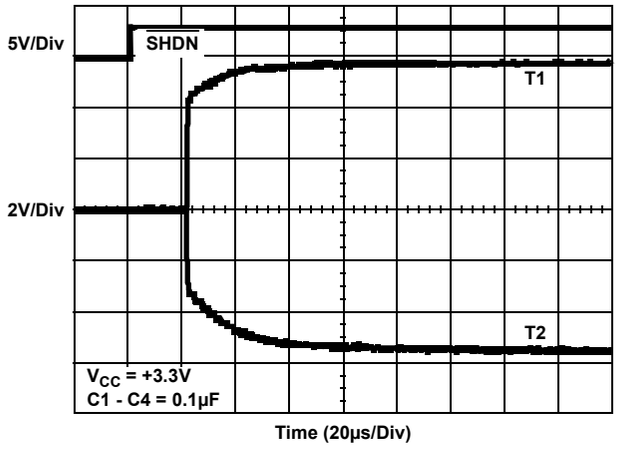

Figure 11. Transmitter Outputs When Exiting Powerdown

chanhvinh.com

4.11 High Data Rates

The ICL3237E maintains the RS-232 ±5V minimum transmitter output voltages even at high data rates. Figure 12 shows a transmitter loopback test circuit and Figure 13 shows the standard speed loopback test result for a single transmitter driving 1000pF and an RS-232 load at 250kbps. Figure 14 shows the MegaBaud loopback results for a single transmitter driving 250pF and an RS-232 load at 1Mbps. The static transmitters were also loaded with an RS-232 receiver.

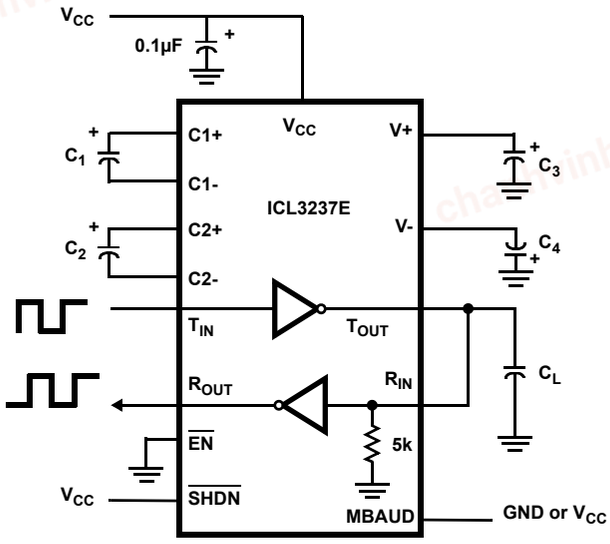

Figure 12. Transmitter Loopback Test Circuit

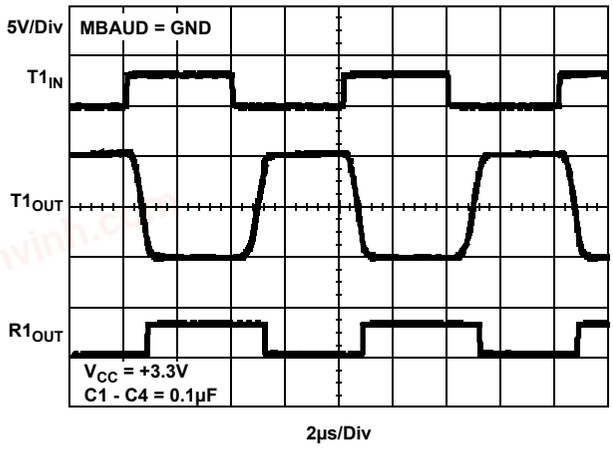

Figure 13. Loopback Test at 250kbps (C_L = 1000pF)

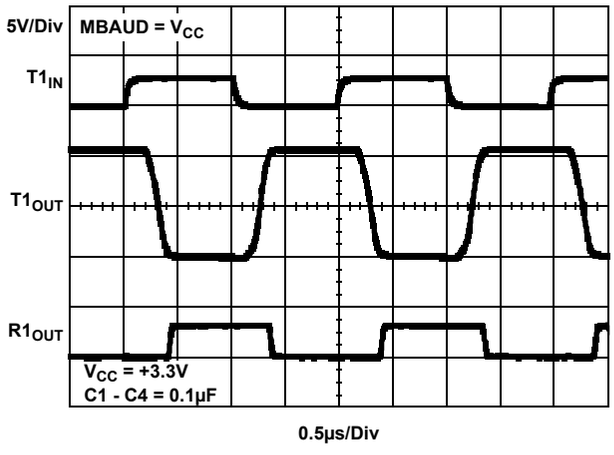

Figure 14. Loopback Test at 1Mbps (C_L = 250pF)

4.12 Interconnection with 3V and 5V Logic

The ICL3237E directly interfaces with 5V CMOS and TTL logic families. AC, HC, and CD4000 outputs can drive the ICL32xx inputs with the ICL32xx at 3.3V and the logic supply at 5V, but ICL32xx outputs do not reach the minimum V_{IH} for these logic families. See Table 7 for more information.

Table 7. Logic Family Compatibility With Various Supply Voltages

System Power-Supply Voltage (V)	V_{CC} Supply Voltage (V)	Compatibility
3.3	3.3	Compatible with all CMOS families.
5	5	Compatible with all TTL and CMOS logic families.
5	3.3	Compatible with ACT and HCT CMOS, and with TTL. ICL32xx outputs are incompatible with AC, HC, and CD4000 CMOS inputs.

chanhvinh.com

5. ±15kV ESD Protection

All pins on the ICL32xx devices include ESD protection structures, but the ICL32xxE family incorporates advanced structures that allow the RS-232 pins (transmitter outputs and receiver inputs) to survive ESD events up to ±15kV. The RS-232 pins are particularly vulnerable to ESD damage because they typically connect to an exposed port on the exterior of the finished product. Touching the port pins or connecting a cable can cause an ESD event that might destroy unprotected ICs. The ESD structures protect the device whether or not it is powered up, protect without allowing any latchup mechanism to activate, and do not interfere with RS-232 signals as large as ±25V.

5.1 Human Body Model (HBM) Testing

The Human Body Model (HBM) test method emulates the ESD event delivered to an IC during human handling. The tester delivers the charge through a 1.5kΩ current limiting resistor, so the test is less severe than the IEC61000 test, which uses a 330Ω limiting resistor. The HBM method determines an IC's ability to withstand the ESD transients typically present during handling and manufacturing. Due to the random nature of these events, each pin is tested with respect to all other pins. The RS-232 pins on "E" family devices can withstand HBM ESD events to ±15kV.

5.2 IEC61000-4-2 Testing

The IEC61000 test method applies to finished equipment, rather than to an individual IC. Therefore, the pins most likely to suffer an ESD event are those that are exposed to the outside world (the RS-232 pins in this case), and the IC is tested in its typical application configuration (power applied) rather than testing each pin-to-pin combination. The lower current limiting resistor coupled with the larger charge storage capacitor yields a test that is much more severe than the HBM test. The extra ESD protection built into this device's RS-232 pins allows the design of equipment meeting level 4 criteria without the need for additional board level protection on the RS-232 port.

5.3 Air-Gap Discharge Test Method

For the air-gap discharge test method, a charged probe tip moves toward the IC pin until the voltage arcs to it. The current waveform delivered to the IC pin depends on factors such as approach speed, humidity, and temperature, so it is difficult to obtain repeatable results.The "E" device RS-232 pins withstand ±15kV air-gap discharges.

5.4 Contact Discharge Test Method

During the contact discharge test, the probe contacts the tested pin before the probe tip is energized and eliminates the variables associated with the air-gap discharge. The result is a more repeatable and predictable test, but equipment limits prevent testing devices at voltages higher than ±8kV. All "E" family devices survive ±8kV contact discharges on the RS-232 pins.

chanhvinh.com

6. Die Characteristics

Substrate Potential (Powered Up)	GND
Transistor Count	619
Process	Si Gate CMOS

chanhvinh.com

chanhvinh.com

7. Revision History

Rev.	Date	Description
6.00	Apr.26.19	Added Related Literature section Updated ordering information table: - Added tape and reel information and notes 4-6 - Removed ICL3237ECA and ICL3237EIA - Added ICL3237ECAZ-T and ICL3237EIAZ-T Added Charge Pump Abs Max Ratings section starting on page 11. Updated package outline drawing from revision 1 to revision 2. - Removed "u" symbol from drawing (overlaps the "a" on Side View). Applied new template.

chanhvinh.com

8. Package Outline Drawing

For the most recent package outline drawing, see M28.209.

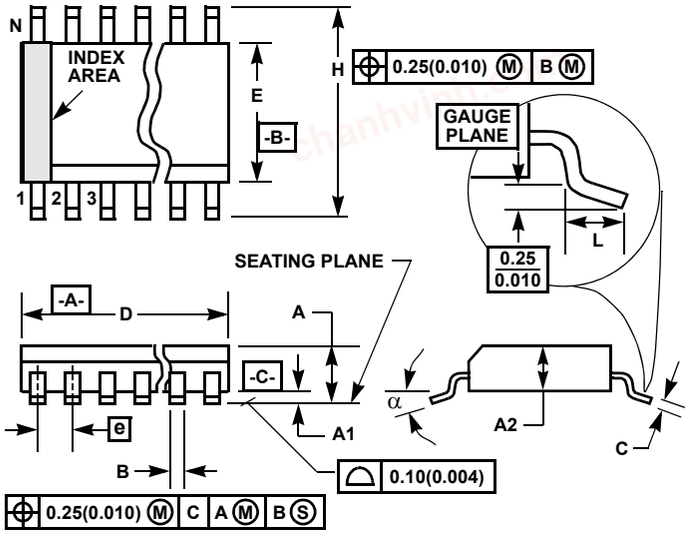

M28.209 (JEDEC MO-150-AH ISSUE B)

28 Lead Shrink Small Outline Plastic Package (SSOP)

SYMBOL	INCHES		MILLIMETERS		NOTES
	MIN	MAX	MIN	MAX	
A	-	0.078	-	2.00	-
A1	0.002	-	0.05	-	-
A2	0.065	0.072	1.65	1.85	-
B	0.009	0.014	0.22	0.38	9
C	0.004	0.009	0.09	0.25	-
D	0.390	0.413	9.90	10.50	3
E	0.197	0.220	5.00	5.60	4
e	0.026 BSC		0.65 BSC		-
H	0.292	0.322	7.40	8.20	-
L	0.022	0.037	0.55	0.95	6
N	28		28		7
α	0°	8°	0°	8°	-

Rev. 2 6/05

Notes:

1. Symbols are defined in the “MO Series Symbol List” in Section 2.2 of Publication Number 95.
2. Dimensioning and tolerancing per ANSI Y14.5M-1982.
3. Dimension “D” does not include mold flash, protrusions or gate burrs. Mold flash, protrusion and gate burrs shall not exceed 0.20mm (0.0078 inch) per side.
4. Dimension “E” does not include interlead flash or protrusions. Interlead flash and protrusions shall not exceed 0.20mm (0.0078 inch) per side.
5. The chamfer on the body is optional. If it is not present, a visual index feature must be located within the crosshatched area.
6. “L” is the length of terminal for soldering to a substrate.
7. “N” is the number of terminal positions.
8. Terminal numbers are shown for reference only.
9. Dimension “B” does not include dambar protrusion. Allowable dambar protrusion shall be 0.13mm (0.005 inch) total in excess of “B” dimension at maximum material condition.
10. Controlling dimension: MILLIMETER. Converted inch dimensions are not necessarily exact.

chanhvinh.com

Notice

1. Descriptions of circuits, software and other related information in this document are provided only to illustrate the operation of semiconductor products and application examples. You are fully responsible for the incorporation or any other use of the circuits, software, and information in the design of your product or system. Renesas Electronics disclaims any and all liability for any losses and damages incurred by you or third parties arising from the use of these circuits, software, or information.
2. Renesas Electronics hereby expressly disclaims any warranties against and liability for infringement or any other claims involving patents, copyrights, or other intellectual property rights of third parties, by or arising from the use of Renesas Electronics products or technical information described in this document, including but not limited to, the product data, drawings, charts, programs, algorithms, and application examples.
3. No license, express, implied or otherwise, is granted hereby under any patents, copyrights or other intellectual property rights of Renesas Electronics or others.
4. You shall not alter, modify, copy, or reverse engineer any Renesas Electronics product, whether in whole or in part. Renesas Electronics disclaims any and all liability for any losses or damages incurred by you or third parties arising from such alteration, modification, copying or reverse engineering.
5. Renesas Electronics products are classified according to the following two quality grades: "Standard" and "High Quality". The intended applications for each Renesas Electronics product depends on the product's quality grade, as indicated below.
   "Standard": Computers; office equipment; communications equipment; test and measurement equipment; audio and visual equipment; home electronic appliances; machine tools; personal electronic equipment; industrial robots; etc.
   "High Quality": Transportation equipment (automobiles, trains, ships, etc.); traffic control (traffic lights); large-scale communication equipment; key financial terminal systems; safety control equipment; etc.
   Unless expressly designated as a high reliability product or a product for harsh environments in a Renesas Electronics data sheet or other Renesas Electronics document, Renesas Electronics products are not intended or authorized for use in products or systems that may pose a direct threat to human life or bodily injury (artificial life support devices or systems; surgical implantations; etc.), or may cause serious property damage (space system; undersea repeaters; nuclear power control systems; aircraft control systems; key plant systems; military equipment; etc.). Renesas Electronics disclaims any and all liability for any damages or losses incurred by you or any third parties arising from the use of any Renesas Electronics product that is inconsistent with any Renesas Electronics data sheet, user's manual or other Renesas Electronics document.
6. When using Renesas Electronics products, refer to the latest product information (data sheets, user's manuals, application notes, "General Notes for Handling and Using Semiconductor Devices" in the reliability handbook, etc.), and ensure that usage conditions are within the ranges specified by Renesas Electronics with respect to maximum ratings, operating power supply voltage range, heat dissipation characteristics, installation, etc. Renesas Electronics disclaims any and all liability for any malfunctions, failure or accident arising out of the use of Renesas Electronics products outside of such specified ranges.
7. Although Renesas Electronics endeavors to improve the quality and reliability of Renesas Electronics products, semiconductor products have specific characteristics, such as the occurrence of failure at a certain rate and malfunctions under certain use conditions. Unless designated as a high reliability product or a product for harsh environments in a Renesas Electronics data sheet or other Renesas Electronics document, Renesas Electronics products are not subject to radiation resistance design. You are responsible for implementing safety measures to guard against the possibility of bodily injury, injury or damage caused by fire, and/or danger to the public in the event of a failure or malfunction of Renesas Electronics products, such as safety design for hardware and software, including but not limited to redundancy, fire control and malfunction prevention, appropriate treatment for aging degradation or any other appropriate measures. Because the evaluation of microcomputer software alone is very difficult and impractical, you are responsible for evaluating the safety of the final products or systems manufactured by you.
8. Please contact a Renesas Electronics sales office for details as to environmental matters such as the environmental compatibility of each Renesas Electronics product. You are responsible for carefully and sufficiently investigating applicable laws and regulations that regulate the inclusion or use of controlled substances, including without limitation, the EU RoHS Directive, and using Renesas Electronics products in compliance with all these applicable laws and regulations. Renesas Electronics disclaims any and all liability for damages or losses occurring as a result of your noncompliance with applicable laws and regulations.
9. Renesas Electronics products and technologies shall not be used for or incorporated into any products or systems whose manufacture, use, or sale is prohibited under any applicable domestic or foreign laws or regulations. You shall comply with any applicable export control laws and regulations promulgated and administered by the governments of any countries asserting jurisdiction over the parties or transactions.
10. It is the responsibility of the buyer or distributor of Renesas Electronics products, or any other party who distributes, disposes of, or otherwise sells or transfers the product to a third party, to notify such third party in advance of the contents and conditions set forth in this document.
11. This document shall not be reprinted, reproduced or duplicated in any form, in whole or in part, without prior written consent of Renesas Electronics.
12. Please contact a Renesas Electronics sales office if you have any questions regarding the information contained in this document or Renesas Electronics products.

(Note1) "Renesas Electronics" as used in this document means Renesas Electronics Corporation and also includes its directly or indirectly controlled subsidiaries.
(Note2) "Renesas Electronics product(s)" means any product developed or manufactured by or for Renesas Electronics.

(Rev.4.0-1 November 2017)

Corporate Headquarters

TOYOSU FORESIA, 3-2-24 Toyosu,
Koto-ku, Tokyo 135-0061, Japan
www.renesas.com

Trademarks

Renesas and the Renesas logo are trademarks of Renesas Electronics Corporation. All trademarks and registered trademarks are the property of their respective owners.

Contact Information

For further information on a product, technology, the most up-to-date version of a document, or your nearest sales office, please visit:
www.renesas.com/contact/

© 2019 Renesas Electronics Corporation. All rights reserved.