chanhvinh.com

Description

The 8T39S11A is a high-performance clock fanout buffer. The input clock can be selected from two differential inputs or one crystal input. The internal oscillator circuit is automatically disabled if the crystal input is not selected. The crystal pin can be driven by a single-ended clock.The selected signal is distributed to ten differential outputs which can be configured as LVPECL, LVDS or HSCL outputs. In addition, an LVCMOS output is provided. All outputs can be disabled into a high-impedance state.

The device is designed for a signal fanout of high-frequency, low phase-noise clock and data signal. The outputs are at a defined level when inputs are open or tied to ground. It is designed to operate from a 3.3V or 2.5V core power supply, and either a 3.3V or 2.5V output operating supply.

Features

- Two differential reference clock input pairs
- Differential input pairs can accept the following differential input levels: LVPECL, LVDS, HCSL, HSTL or Single Ended
- Crystal Input accepts 10MHz to 40MHz Crystal or Single Ended Clock
- Maximum Output Frequency
  LVPECL - 2GHz
  LVDS - 2GHz
  HCSL - 250MHz
  LVCMOS - 250MHz
- Two banks, each has five differential output pairs that can be configured as LVPECL or LVDS or HCSL
- One single-ended reference output with synchronous enable to avoid clock glitch
- Output skew: 80ps (maximum)
  (Bank A and Bank B at the same output level)
- Part-to-part skew: 200ps (typical)
- Additive RMS phase jitter @ 156.25MHz:
  5.6fs RMS (10kHz - 1 MHz), typical @ 3.3V/ 3.3V
  34.7fs RMS (12kHz - 20MHz), typical @ 3.3V/ 3.3V
- Supply voltage modes:
  V_{DD}/V_{DDO}
  3.3V/3.3V
  3.3V/2.5V
  2.5V/2.5V
- -40°C to 85°C ambient operating temperature
- Lead-free (RoHS 6) packaging

© 2019 Renesas Electronics Corporation

chanhvinh.com

Block Diagram

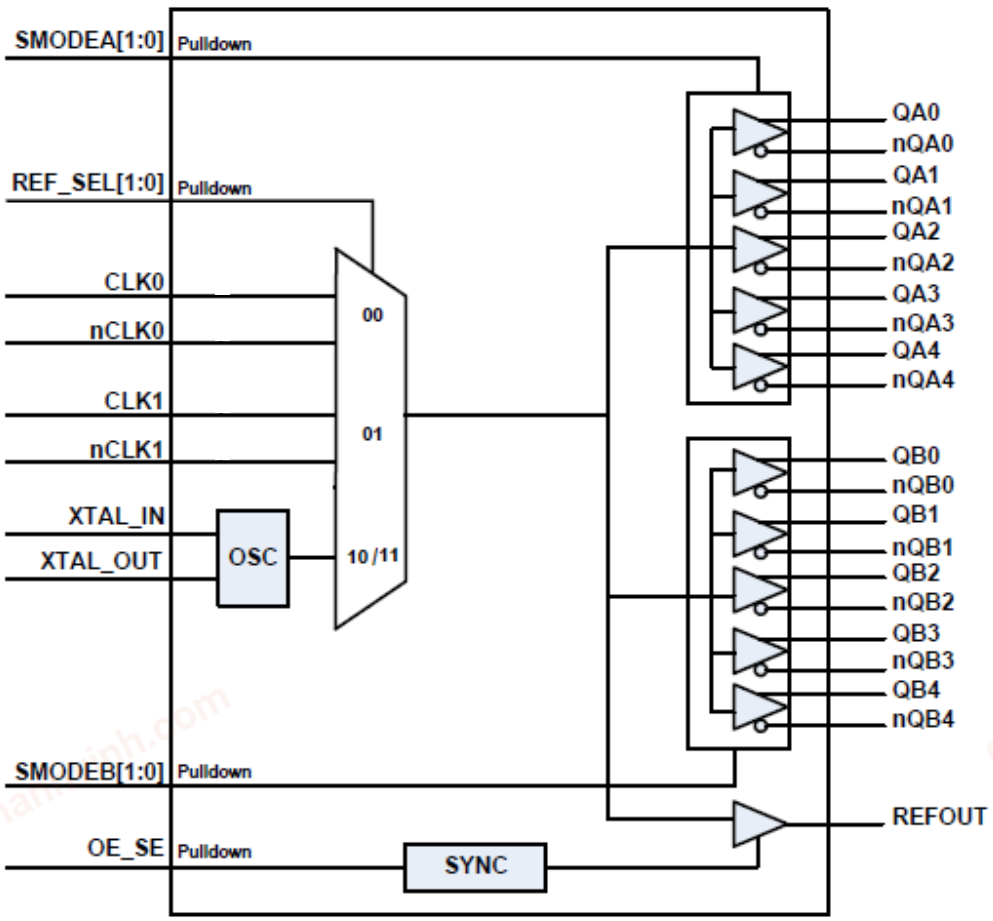

Pin Assignment for 7mm x 7mm 48-Lead VFQFN Package

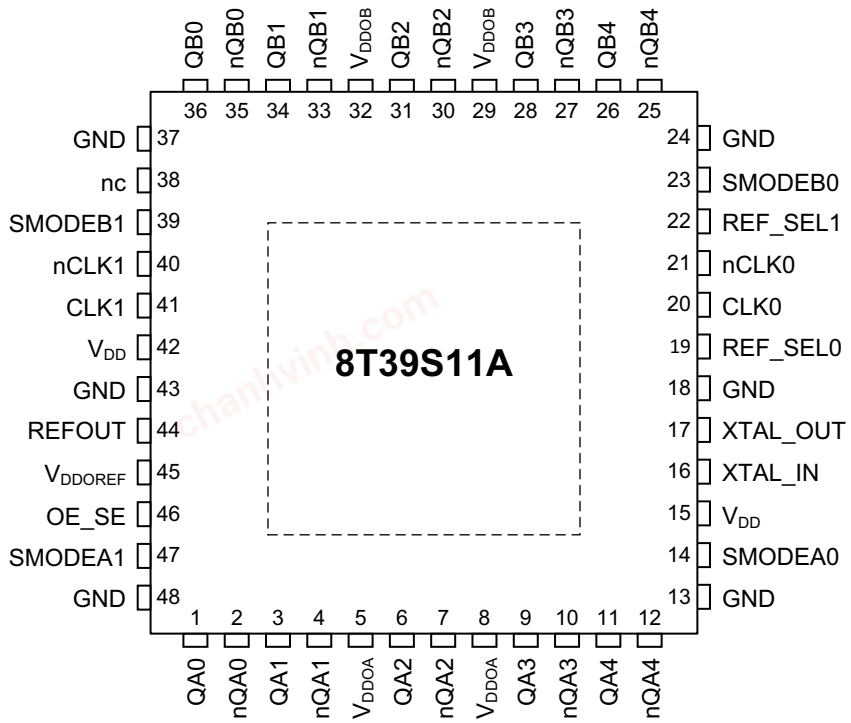

chanhvinh.com

Pin Description and Pin Characteristic Tables

Table 1: Pin Descriptions[1]

Number	Name	Type		Description
1	QA0	Output		Differential Bank A clock output pair. LVPECL, LVDS or HCSL interface levels.
2	nQA0	Output		Differential Bank A clock output pair. LVPECL, LVDS or HCSL interface levels.
3	QA1	Output		Differential Bank A clock output pair. LVPECL, LVDS or HCSL interface levels.
4	nQA1	Output		Differential Bank A clock output pair. LVPECL, LVDS or HCSL interface levels.
5	V_{DDOA}	Power		Output supply pins for Bank QA outputs.
6	QA2	Output		Differential Bank A clock output pair. LVPECL, LVDS or HCSL interface levels.
7	nQA2	Output		Differential Bank A clock output pair. LVPECL, LVDS or HCSL interface levels.
8	V_{DDOA}	Power		Output supply pins for Bank QA outputs.
9	QA3	Output		Differential Bank A clock output pair. LVPECL, LVDS or HCSL interface levels.
10	nQA3	Output		Differential Bank A clock output pair. LVPECL, LVDS or HCSL interface levels.
11	QA4	Output		Differential Bank A clock output pair. LVPECL, LVDS or HCSL interface levels.
12	nQA4	Output		Differential Bank A clock output pair. LVPECL, LVDS or HCSL interface levels.
13	GND	Power		Power supply ground.
14	SMODEA0	Input	Pulldown	Output driver select for Bank A outputs. See Table 8 for function. LVCMOS/LVTTL interface levels.
15	V_{DD}	Power		Power supply pin.
16	XTAL_IN	Input		Crystal oscillator interface.
17	XTAL_OUT	Output		Crystal oscillator interface.
18	GND	Power		Power supply ground.
19	REF_SEL0	Input	Pulldown	Input clock selection. LVCMOS/LVTTL interface levels. See Table 3 for function.
20	CLK0	Input	Pullup/ Pulldown	Non-inverting differential clock. Internally biased to $0.33V_{DD}$.
21	nCLK0	Input	Pullup/ Pulldown	Inverting differential clock. Internally biased to $0.4V_{DD}$.
22	REF_SEL1	Input	Pulldown	Input clock selection. LVCMOS/LVTTL interface levels. See Table 3 for function.
23	SMODEB0	Input	Pulldown	Output driver select for Bank B outputs. See Table 9 for function. LVCMOS/LVTTL interface levels.
24	GND	Power		Power supply ground.
25	nQB4	Output		Differential Bank B clock output pair. LVPECL, LVDS or HCSL interface levels.
26	QB4	Output		Differential Bank B clock output pair. LVPECL, LVDS or HCSL interface levels.
27	nQB3	Output		Differential Bank B clock output pair. LVPECL, LVDS or HCSL interface levels.
28	QB3	Output		Differential Bank B clock output pair. LVPECL, LVDS or HCSL interface levels.
29	V_{DDOB}	Power		Output supply pins for Bank QB outputs.
30	nQB2	Output		Differential Bank B clock output pair. LVPECL, LVDS or HCSL interface levels.
31	QB2	Output		Differential Bank B clock output pair. LVPECL, LVDS or HCSL interface levels.
32	V_{DDOB}	Power		Output supply pins for Bank QB outputs.

© 2019 Renesas Electronics Corporation

chanhvinh.com

Table 1: Pin Descriptions[1] (Continued)

Number	Name	Type		Description
33	nQB1	Output		Differential Bank B clock output pair. LVPECL, LVDS or HCSL interface levels.
34	QB1	Output		Differential Bank B clock output pair. LVPECL, LVDS or HCSL interface levels.
35	nQB0	Output		Differential Bank B clock output pair. LVPECL, LVDS or HCSL interface levels.
36	QB0	Output		Differential Bank B clock output pair. LVPECL, LVDS or HCSL interface levels.
37	GND	Power		Power supply ground.
38	nc	Unused		No connect pin.
39	SMODEB1	Input	Pulldown	Output driver select for Bank B outputs. See Table 9 for function. LVCMOS/LVTTL interface levels.
40	nCLK1	Input	Pullup/ Pulldown	Inverting differential clock. Internally biased to $0.4V_{DD}$.
41	CLK1	Input	Pullup/ Pulldown	Non-inverting differential clock. Internally biased to $0.33V_{DD}$.
42	V_{DD}	Power		Power supply pin.
43	GND	Power		Power supply ground.
44	REFOUT	Output		Single-ended reference clock output. LVCMOS/LVTTL interface levels.
45	V_{DDOREF}	Power		Output supply pin for REFOUT output.
46	OE_SE	Input	Pulldown	Output enable. LVCMOS/LVTTL interface levels. See Table 4.
47	SMODEA1	Input	Pulldown	Output driver select for Bank A outputs. See Table 8 for function. LVCMOS/LVTTL interface levels.
48	GND	Power		Power supply ground.
ePad	GND_{EP}	Power		Connect ePad to ground to ensure proper heat dissipation.

NOTE 1. *Pulldown* and *Pullup* refer to internal input resistors. See Table 2, *Pin Characteristics,* for typical values.

Table 2: Pin Characteristics

Symbol	Parameter		Test Conditions	Minimum	Typical	Maximum	Units
C_{IN}	Input Capacitance	OE_SE, SMODEx[1:0], REF_SEL[1:0]			2		pF
$R_{PULLDOWN}$	Input Pulldown Resistor				50		kΩ
R_{PULLUP}	Input Pullup Resistor	CLK0, CLK1			100		kΩ
		nCLK0, nCLK1			75		kΩ
C_{PD}	Power Dissipation Capacitance	REFOUT	V_{DDOREF} = 3.465V		5.3		pF
		REFOUT	V_{DDOREF} = 2.625V		6.3		pF
R_{OUT}	Output Impedance	REFOUT	V_{DDOREF} = 3.3V		52		Ω
		REFOUT	V_{DDOREF} = 2.5V		63		Ω

© 2019 Renesas Electronics Corporation

chanhvinh.com

Function Tables

Table 3: REF_SELx Function Table

Control Input REF_SEL[1:0]	Selected Input Reference Clock
00 (default)	CLK0, nCLK0
01	CLK1, nCLK1
10	XTAL
11	XTAL

Table 4: OE_SE Function Table[1]

OE_SE	REFOUT
0 (default)	High-Impedance
1	Enabled

NOTE 1. Synchronous output enable to avoid clock glitch.

Table 5: Input/Output Operation Table, OE_SE

Input Status			Output State
OE_SE	REF_SEL [1:0]	CLKx and nCLKx	REFOUT
0 (default)	Don't care	Don't Care	High Impedance
1	10 or 11	Don't Care	Fanout crystal oscillator
1	00 (default)	CLK0 and nCLK0 are both open circuit	Logic Low
		CLK0 and nCLK0 are tied to ground	Logic Low
		CLK0 is high, nCLK0 is low	Logic High
		CLK0 is low, nCLK0 is high	Logic Low
1	01	CLK1 and nCLK1 are both open circuit	Logic Low
		CLK1 and nCLK1 are tied to ground	Logic Low
		CLK1 is high, nCLK1 is low	Logic High
		CLK1 is low, nCLK1 is high	Logic Low

Table 6: Input/Output Operation Table, SMODEA

Input Status			Output State
SMODEA[1:0]	REF_SEL[1:0]	CLKx and nCLKx	QA[4:0], nQA[4:0]
11	Don't care	Don't Care	High Impedance
00, 01 or 10	10 or 11	Don't Care	Fanout crystal oscillator
00, 01 or 10	00 (default)	CLK0 and nCLK0 are both open circuit	QA[4:0] = Low nQA[4:0] = High
		CLK0 and nCLK0 are tied to ground	QA[4:0] = Low nQA[4:0] = High
		CLK0 is high, nCLK0 is low	QA[4:0] = High nQA[4:0] = Low
		CLK0 is low, nCLK0 is high	QA[4:0] = Low nQA[4:0] = High
00, 01 or 10	01	CLK1 and nCLK1 are both open circuit	QA[4:0] = Low nQA[4:0] = High
		CLK1 and nCLK1 are tied to ground	QA[4:0] = Low nQA[4:0] = High
		CLK1 is high, nCLK1 is low	QA[4:0] = High nQA[4:0] = Low
		CLK1 is low, nCLK1 is high	QA[4:0] = Low nQA[4:0] = High

© 2019 Renesas Electronics Corporation

chanhvinh.com

Table 7: Input/Output Operation Table, SMODEB

Input Status			Output State
SMODEB[1:0]	**REF_SEL[1:0]**	**CLKx and nCLKx**	**QB[4:0], nQB[4:0]**
11	Don't care	Don't Care	High Impedance
00, 01 or 10	10 or 11	Don't Care	Fanout crystal oscillator
00, 01 or 10	00 (default)	CLK0 and nCLK0 are both open circuit	QB[4:0] = Low nQB[4:0] = High
		CLK0 and nCLK0 are tied to ground	QB[4:0] = Low nQB[4:0] = High
		CLK0 is high, nCLK0 is low	QB[4:0] = High nQB[4:0] = Low
		CLK0 is low, nCLK0 is high	QB[4:0] = Low nQB[4:0] = High
00, 01 or 10	01	CLK1 and nCLK1 are both open circuit	QB[4:0] = Low nQB[4:0] = High
		CLK1 and nCLK1 are tied to ground	QB[4:0] = Low nQB[4:0] = High
		CLK1 is high, nCLK1 is low	QB[4:0] = High nQB[4:0] = Low
		CLK1 is low, nCLK1 is high	QB[4:0] = Low nQB[4:0] = High

Table 8: Output Level Selection Table, QA[0:4], nQA[0:4]

SMODEA1	SMODEA0	Output Type
0	0	LVPECL (default)
0	1	LVDS
1	0	HCSL
1	1	High-Impedance

Table 9: Output Level Selection Table, QB[0:4], nQB[0:4]

SMODEB1	SMODEB0	Output Type
0	0	LVPECL (default)
0	1	LVDS
1	0	HCSL
1	1	High-Impedance

© 2019 Renesas Electronics Corporation

chanhvinh.com

Absolute Maximum Ratings

Exposure to absolute maximum rating conditions for extended periods may affect product reliability. Stresses beyond those listed under *Absolute Maximum Ratings* may cause permanent damage to the device. These ratings are stress specifications only. Functional operation of the product at these conditions or any conditions beyond those listed in the *DC Characteristics or AC Characteristics* is not implied.

Item	Rating
Supply Voltage, V_{DD}	4.6V
Inputs, V_I XTAL_IN Other Inputs	 0V to 2V -0.5V to V_{DD} + 0.5V
Outputs, V_O, (HCSL, LVCMOS)	-0.5V to V_{DDOX}[1] + 0.5V
Outputs, I_O, (LVPECL) Continuous Current Surge Current	 50mA 100mA
Outputs, I_O, (LVDS) Continuous Current Surge Current	 10mA 15mA
Junction Temperature	150°C
Storage Temperature, T_{STG}	-65°C to 150°C

NOTE 1. V_{DDOX} denotes V_{DDOA}, V_{DDOB} and V_{DDOREF}.

Recommended Operating Conditions

Symbol	Parameter	Minimum	Typical	Maximum	Units
T_A	Ambient air temperature	-40		85	°C
T_J	Junction temperature			125	°C

NOTE 1: It is the user's responsibility to ensure that device junction temperature remains below the maximum allowed.

NOTE 2: All conditions in the table must be met to guarantee device functionality.

NOTE 3: The device is verified to the maximum operating junction temperature through simulation.

DC Electrical Characteristics

Table 10: Power Supply DC Characteristics, V_{DD} = V_{DDOA} = V_{DDOB} = V_{DDOREF} = 3.3V±5%, GND = 0V, T_A = -40°C to 85°C

Symbol	Parameter	Test Conditions	Minimum	Typical	Maximum	Units
V_{DD}	Power Supply Voltage		3.135	3.3	3.465	V
V_{DDOA}, V_{DDOB}, V_{DDOREF}	Output Supply Voltage		3.135	3.3	3.465	V
I_{DD}	Power Supply Current	SMODEA/B[1:0] = 01		101	114	mA
I_{DDOA} + I_{DDOB}	Output Supply Current[1]	SMODEA/B[1:0] = 01		215	242	mA
I_{EE}	Power Supply Current	SMODEA/B[1:0] = 00 (default)		168	195	mA
I_{DD}	Power Supply Current	SMODEA/B[1:0] = 10		93	106	mA
I_{DDOA} + I_{DDOB}	Output Supply Current[2]	SMODEA/B[1:0] = 10		81	93	mA

NOTE 1. Differential outputs are terminated with 100Ω.

NOTE 2. Differential outputs are running at 250MHz and floating.

chanhvinh.com

Table 11: Power Supply DC Characteristics, V_{DD} = 3.3V±5%, V_{DDOA} = V_{DDOB} = V_{DDOREF} = 2.5V±5%, GND = 0V, T_A = -40°C to 85°C

Symbol	Parameter	Test Conditions	Minimum	Typical	Maximum	Units
V_{DD}	Power Supply Voltage		3.135	3.3	3.465	V
V_{DDOA}, V_{DDOB}, V_{DDOREF}	Output Supply Voltage		2.375	2.5	2.625	V
I_{DD}	Power Supply Current	SMODEA/B[1:0] = 01		101	114	mA
I_{DDOA} + I_{DDOB}	Output Supply Current[1]	SMODEA/B[1:0] = 01		215	242	mA
I_{EE}	Power Supply Current	SMODEA/B[1:0] = 00 (default)		167	194	mA
I_{DD}	Power Supply Current	SMODEA/B[1:0] = 10		93	106	mA
I_{DDOA} + I_{DDOB}	Output Supply Current[2]	SMODEA/B[1:0] = 10		66	77	mA

NOTE 1. Differential outputs are terminated with 100Ω.

NOTE 2. Differential outputs are running at 250MHz and floating.

Table 12: Power Supply DC Characteristics, V_{DD} = V_{DDOA} = V_{DDOB} = V_{DDOREF} = 2.5V±5%, GND = 0V, T_A = -40°C to 85°C

Symbol	Parameter	Test Conditions	Minimum	Typical	Maximum	Units
V_{DD}	Power Supply Voltage		2.375	2.5	2.625	V
V_{DDOA}, V_{DDOB}, V_{DDOREF}	Output Supply Voltage		2.375	2.5	2.625	V
I_{DD}	Power Supply Current	SMODEA/B[1:0] = 01		90	102	mA
I_{DDOA} + I_{DDOB}	Output Supply Current[1]	SMODEA/B[1:0] = 01		207	234	mA
I_{EE}	Power Supply Current	SMODEA/B[1:0] = 00 (default)		153	174	mA
I_{DD}	Power Supply Current	SMODEA/B[1:0] = 10		74	84	mA
I_{DDOA} + I_{DDOB}	Output Supply Current[2]	SMODEA/B[1:0] = 10		65	77	mA

NOTE 1. Differential outputs are terminated with 100Ω.

NOTE 2. Differential outputs are running at 250MHz and floating.

Table 13: LVCMOS/LVTTL DC Characteristics,
V_{DD} = 3.3V±5%, 2.5V±5%, V_{DDOREF} = 3.3V±5% or 2.5V±5%, GND = 0V, T_A = -40°C to 85°C

Symbol	Parameter		Test Conditions	Minimum	Typical	Maximum	Units
V_{IH}	Input High Voltage	OE_SE, SMODEA[1:0], SMODEB[1:0], REF_SEL[1:0]	V_{DD} = 3.3V±5%	2		V_{DD} + 0.3	V
			V_{DD} = 2.5V±5%	1.7		V_{DD} + 0.3	V
V_{IL}	Input Low Voltage		V_{DD} = 3.3V±5%	-0.3		0.8	V
			V_{DD} = 2.5V±5%	-0.3		0.7	V
I_{IH}	Input High Current		V_{DD} = V_{IN} = 3.465V or 2.625V			150	µA
I_{IL}	Input Low Current		V_{DD} = 3.465V or 2.625V, V_{IN} = 0V	-5			µA
V_{OH}	Output High Voltage	REFOUT	V_{DDOREF}= 3.3V±5%: I_{OH} = -1mA	2.6			V
			V_{DDOREF} = 2.5V±5%: I_{OH} = -1mA	1.8			V
V_{OL}	Output Low Voltage		V_{DDOREF} = 3.3V±5% or 2.5V±5%: I_{OL} = 1mA			0.5	V

chanhvinh.com

Table 14: Differential DC Characteristics, V_{DD} = 3.3V±5% or 2.5V±5%, GND = 0V, T_A = -40°C to 85°C

Symbol	Parameter		Test Conditions	Minimum	Typical	Maximum	Units
I_{IH}	Input High Current	CLK[0:1], nCLK[0:1]	V_{DD} = V_{IN} = 3.465V or 2.625V			150	µA
I_{IL}	Input Low Current	CLK[0:1], nCLK[0:1]	V_{DD} = 3.465V or 2.625V, V_{IN} = 0V	-150			µA
V_{PP}	Peak-to-Peak Input Voltage[1]			0.240		1.3	V
V_{CMR}	Common Mode Input Voltage[1 2]			GND + 0.5		V_{DD} – 0.85	V

NOTE 1. Input voltage should not be less than -0.3V, and greater than V_{DD}.
NOTE 2. Common mode voltage is defined as the crosspoint.

Table 15: LVPECL DC Characteristics, V_{DDOA} = V_{DDOB} = 3.3V±5%, GND = 0V, T_A = -40°C to 85°C[1]

Symbol	Parameter	Test Conditions	Minimum	Typical	Maximum	Units
V_{OH}	Output High Voltage[2]		V_{DDOX} – 1.4		V_{DDOX} – 0.8	V
V_{OL}	Output Low Voltage[2]		V_{DDOX} – 2.0		V_{DDOX} – 1.6	V
V_{SWING}	Peak-to-Peak Output Voltage Swing		0.6		1.0	V

NOTE 1. V_{DDOX} denotes V_{DDOA} and V_{DDOB}.
NOTE 2. Outputs terminated with 50Ω to V_{DDOX} – 2V.

Table 16: LVPECL DC Characteristics, V_{DDOA} = V_{DDOB} = 2.5V±5%, GND = 0V, T_A = -40°C to 85°C[1]

Symbol	Parameter	Test Conditions	Minimum	Typical	Maximum	Units
V_{OH}	Output High Voltage[2]		V_{DDOX} – 1.4		V_{DDOX} – 0.8	V
V_{OL}	Output Low Voltage[2]		V_{DDOX} – 2.0		V_{DDOX} – 1.6	V
V_{SWING}	Peak-to-Peak Output Voltage Swing		0.4		1.0	V

NOTE 1. V_{DDOX} denotes V_{DDOA} and V_{DDOB}.
NOTE 2. Outputs terminated with 50Ω to V_{DDOX} – 2V.

Table 17: LVDS DC Characteristics, V_{DDOA} = V_{DDOB} = 3.3V±5%, GND = 0V, T_A = -40°C to 85°C

Symbol	Parameter	Test Conditions	Minimum	Typical	Maximum	Units
V_{OD}	Differential Output Voltage		247		454	mV
ΔV_{OD}	V_{OD} Magnitude Change			50		mV
V_{OS}	Offset Voltage		1.025		1.375	V
ΔV_{OS}	V_{OS} Magnitude Change			50		mV

chanhvinh.com

Table 18: LVDS DC Characteristics, V_{DDOA} = V_{DDOB} = 2.5V±5%, GND = 0V, T_A = -40°C to 85°C

Symbol	Parameter	Test Conditions	Minimum	Typical	Maximum	Units
V_{OD}	Differential Output Voltage		247		454	mV
ΔV_{OD}	V_{OD} Magnitude Change			50		mV
V_{OS}	Offset Voltage		1.025		1.375	V
ΔV_{OS}	V_{OS} Magnitude Change			50		mV

Table 19: Crystal Characteristics

Parameter	Test Conditions	Minimum	Typical	Maximum	Units
Mode of Oscillation			Fundamental		
Frequency		10		40	MHz
Equivalent Series Resistance (ESR)				50	Ω
Shunt Capacitance				7	pF
Capacitive Loading (C_L)			12	18	pF

© 2019 Renesas Electronics Corporation

chanhvinh.com

AC Electrical Characteristics

Table 20: AC Characteristics, $V_{DD} = V_{DDOA} = V_{DDOB} = V_{DDOREF}$ = 3.3V±5%, GND = 0V, T_A = -40°C to 85°C [1] [2]

Symbol	Parameter		Test Conditions	Minimum	Typical	Maximum	Units
f_{OUT}	Output Frequency	LVDS, LVPECL Outputs				2000	MHz
		HCSL Outputs				250	MHz
		LVCMOS Outputs				250	MHz
t_{jit}	Buffer Additive Phase Jitter, RMS: Integration Range 12kHz - 20MHz REF_SEL[1:0] = 00 or 01		Clock Frequency = 156.25MHz; Input Clock from 8T49NS010A, Input Clock Jitter = 86.6fs; SMODEA/B[1:0] = 00		34.7		fs
	Buffer Additive Phase Jitter, RMS: Integration Range 10kHz - 1MHz REF_SEL[1:0] = 00 or 01		Clock Frequency = 156.25MHz; Input Clock from 8T49NS010A, Input Clock Jitter = 60.8fs; SMODEA/B[1:0] = 00		5.6		fs
NF	Noise Floor	LVPECL Outputs	Offset Freq. >10MHz; 156.25MHz Clock Freq.		-159.1		dBc/Hz
		LVDS Outputs			-157.0		dBc/Hz
		HCSL Outputs			-156.0		dBc/Hz
tjit(Ø)	RMS Phase Jitter; 25MHz Integration Range: 100Hz - 1MHz		REF_SEL[1:0] = 10 or 11[3]		0.176		ps
t_{PD}	Propagation Delay[4]	CLK0, nCLK0 or CLK1, nCLK1 to any Qx, nQx Outputs	SMODEA/B[1:0] = 00	0.28		0.75	ns
			SMODEA/B[1:0] = 01	0.28		0.75	ns
			SMODEA/B[1:0] = 10	0.90		2.65	ns
*t*sk(o)	Output Skew[5] [6]					80	ps
*t*sk(pp)	Part-to-Part Skew[6] [7]				200		ps
V_{OH}	Voltage High[8] [9]	HCSL Outputs	T_A = 25°C, DC Measurement, R_T = 50Ω to GND $C_L \leq$ 5pF	520		920	mV
V_{OL}	Voltage Low[8] [10]	HCSL Outputs		-150		150	mV
V_{CROSS}	Absolute Crossing Voltage[8] [11] [12]	HCSL Outputs	R_T = 50Ω to GND $C_L \leq$ 5pF	160		460	mV
ΔV_{CROSS}	Total Variation of V_{CROSS} over all Edges[8] [11] [13]	HCSL Outputs				140	mV
	Rise/Fall Edge Rate[3] [14] [15]	HCSL Outputs		0.6		4.0	V/ns
t_R / t_F	Output Rise/Fall Time	LVPECL Outputs	20% to 80%		150	300	ps
		LVDS Outputs	20% to 80%		150	300	ps
		HCSL Outputs	20% to 80%		400	650	ps
		REFOUT	20% to 80%		450	750	ps
odc	Output Duty Cycle[16]		with Crystal Input	45		55	%
			with External 50%/ 50% Duty Cycle Clock Input	45		55	%
$MUX_{_ISOLATION}$	MUX Isolation		156.25MHz		75		dB

NOTE 1. Electrical parameters are guaranteed over the specified ambient operating temperature range, which is established when the device is mounted in a test socket with maintained transverse airflow greater than 500 lfpm. The device will meet specifications after thermal equilibrium has been reached under these conditions.

NOTE 2. All LVDS and LVPECL parameters characterized up to 1.5GHz. HCSL parameters characterized up to 250MHz.

chanhvinh.com

NOTE 3. Measurement taken from differential waveform.

NOTE 4. Measured from the differential input crosspoint to the differential output crosspoint.

NOTE 5. Defined as skew between outputs at the same supply voltage and with equal load conditions. Measured at the differential crosspoint.

NOTE 6. This parameter is defined in accordance with JEDEC Standard 65.

NOTE 7. Defined as skew between outputs on different devices operating at the same supply voltage, same temperature, same frequency and with equal load conditions. Using the same type of inputs on each device, the outputs are measured at the differential crosspoint

NOTE 8. Measurement taken from single-ended waveform.

NOTE 9. Defined as the maximum instantaneous voltage including overshoot.

NOTE 10. Defined as the minimum instantaneous voltage including undershoot.

NOTE 11. Measured at crosspoint where the instantaneous voltage value of the rising edge of Qx equals the falling edge of nQx.

NOTE 12. Refers to the total variation from the lowest crosspoint to the highest, regardless of which edge is crossing. Refers to all crosspoint for this measurement.

NOTE 13. Measured from -150mV to +150mV on the differential waveform (Qx minus nQx). The signal must be monotonic through the measurement region for rise and fall time. The 300mV measurement window is centered on the differential zero crossing.

NOTE 14. Measured from -150mV to +150mV on the differential waveform (Qx minus nQx). The signal must be monotonic through the measurement region for rise and fall time. The 300mV measurement window is centered on the differential zero crossing.

NOTE 15. Measured at 100MHz.

NOTE 16. Measured for the following frequencies: 25MHz, 100MHz, 125MHz, 156.25MHz, 312.5MHz, 400MHz, and 644.5313MHz.

chanhvinh.com

chanhvinh.com

Table 21: AC Characteristics, V_{DD} = 3.3V±5%, V_{DDOA} = V_{DDOB} = V_{DDOREF} = 2.5V±5%, GND = 0V, T_A = -40°C to 85°C [1] [2]

Symbol	Parameter		Test Conditions	Minimum	Typical	Maximum	Units
f_{OUT}	Output Frequency	LVDS, LVPECL Outputs				2000	MHz
		HCSL Outputs				250	MHz
		LVCMOS Outputs				250	MHz
t_{jit}	Buffer Additive Phase Jitter, RMS: Integration Range 12kHz - 20MHz REF_SEL[1:0] = 00 or 01		Clock Frequency = 156.25MHz; Input Clock from 8T49NS010A, Input Clock Jitter = 86.8fs; SMODEA/B[1:0] = 00		36.7		fs
	Buffer Additive Phase Jitter, RMS: Integration Range 10KHz - 1MHz REF_SEL[1:0] = 00 or 01		Clock Frequency = 156.25MHz; Input Clock from 8T49NS010A, Input Clock Jitter = 60.8fs; SMODEA/B[1:0] = 00		6.6		fs
NF	Noise Floor	LVPECL	Offset Freq. >10MHz; 156.25MHz Clock Freq.		-159.1		dBc/Hz
		LVDS			-157.0		dBc/Hz
		HCSL			-155.7		dBc/Hz
tjit(Ø)	RMS Phase Jitter; 25MHz Integration Range: 100Hz - 1MHz		REF_SEL[1:0] = 10 or 11[3]		0.191		ps
t_{PD}	Propagation Delay[4]	CLK0, nCLK0 or CLK1, nCLK1 to any Qx, nQx Outputs	SMODEA/B[1:0] = 00	0.225		0.80	ns
			SMODEA/B[1:0] = 01	0.275		0.80	ns
			SMODEA/B[1:0] = 10	0.9		2.80	ns
*t*sk(o)	Output Skew[5] [6]					80	ps
*t*sk(pp)	Part-to-Part Skew[6] [7]				200		ps
V_{OH}	Voltage High[8] [9]	HCSL Outputs	T_A = 25°C, DC Measurement, R_T = 50Ω to GND $C_L \leq$ 5pF	520		920	mV
V_{OL}	Voltage Low[8] [10]	HCSL Outputs		-150		150	mV
V_{CROSS}	Absolute Crossing Voltage[8] [11] [12]	HCSL Outputs	R_T = 50Ω to GND $C_L \leq$ 5pF	160		460	mV
ΔV_{CROSS}	Total Variation of V_{CROSS} over all Edges[8] [11] [13]	HCSL Outputs				140	mV
	Rise/Fall Edge Rate[3] [14] [15]	HCSL Outputs		0.6		4.0	V/ns
t_R / t_F	Output Rise/Fall Time	LVPECL Outputs	20% to 80%		150	300	ps
		LVDS Outputs	20% to 80%		150	300	ps
		HCSL Outputs	20% to 80%		400	650	ps
		REFOUT	20% to 80%		450	750	ps
odc	Output Duty Cycle[16]		with Crystal Input	45		55	%
			with external 50%/ 50% Duty Cycle Clock Input	45		55	%
$MUX_{ISOLATION}$	MUX Isolation		156.25MHz		75		dB

NOTE 1. Electrical parameters are guaranteed over the specified ambient operating temperature range, which is established when the device is mounted in a test socket with maintained transverse airflow greater than 500 lfpm. The device will meet specifications after thermal equilibrium has been reached under these conditions.

© 2019 Renesas Electronics Corporation

chanhvinh.com

NOTE 2. All LVDS and LVPECL parameters characterized up to 1.5GHz. HCSL parameters characterized up to 250MHz.

NOTE 3. Measurement taken from differential waveform.

NOTE 4. Measured from the differential input crosspoint to the differential output crosspoint.

NOTE 5. Defined as skew between outputs at the same supply voltage and with equal load conditions. Measured at the differential crosspoint.

NOTE 6. This parameter is defined in accordance with JEDEC Standard 65.

NOTE 7. Defined as skew between outputs on different devices operating at the same supply voltage, same temperature, same frequency and with equal load conditions. Using the same type of inputs on each device, the outputs are measured at the differential crosspoint

NOTE 8. Measurement taken from single-ended waveform.

NOTE 9. Defined as the maximum instantaneous voltage including overshoot.

NOTE 10. Defined as the minimum instantaneous voltage including undershoot.

NOTE 11. Measured at crosspoint where the instantaneous voltage value of the rising edge of Qx equals the falling edge of nQx.

NOTE 12. Refers to the total variation from the lowest crosspoint to the highest, regardless of which edge is crossing. Refers to all crosspoint for this measurement.

NOTE 13. Defined as the total variation of all crossing voltages of rising Qx and falling nQx, This is the maximum allowed variance in Vcross for any particular system.

NOTE 14. Measured from -150mV to +150mV on the differential waveform (Qx minus nQx). The signal must be monotonic through the measurement region for rise and fall time. The 300mV measurement window is centered on the differential zero crossing.

NOTE 15. Measured at 100MHz.

NOTE 16. Measured for the following frequencies: 25MHz, 100MHz, 125MHz, 156.25MHz, 312.5MHz, 400MHz, and 644.5313MHz.

chanhvinh.com

Table 22: AC Characteristics, $V_{DD} = V_{DDOA} = V_{DDOB} = V_{DDOREF}$ = 2.5V±5%, GND = 0V, T_A = -40°C to 85°C [1] [2]

Symbol	Parameter		Test Conditions	Minimum	Typical	Maximum	Units
f_{OUT}	Output Frequency	LVDS, LVPECL Outputs				2000	MHz
		HCSL Outputs				250	MHz
		LVCMOS Outputs				250	MHz
t_{jit}	Buffer Additive Phase Jitter, RMS: Integration Range 12kHz - 20MHz REF_SEL[1:0] = 00 or 01		Clock Frequency = 156.25MHz; Input Clock from 8T49NS010A, Input Clock Jitter = 86.8fs; SMODEA/B[1:0] = 00		37.1		fs
	Buffer Additive Phase Jitter, RMS: Integration Range 10kHz - 1MHz REF_SEL[1:0] = 00 or 01		Clock Frequency = 156.25MHz; Input Clock from 8T49NS010A, Input Clock Jitter = 60.8fs; SMODEA/B[1:0] = 00		9.0		fs
tjit(Ø)	RMS Phase Jitter; 25MHz Integration Range: 100Hz - 1MHz		REF_SEL[1:0] = 10 or 11[3]		0.371		ps
NF	Noise Floor	LVPECL	Offset Freq. >10MHz; 156.25MHz Clock Freq.		-159		dBc/Hz
		LVDS			-157		dBc/Hz
		HCSL			-155		dBc/Hz
t_{PD}	Propagation Delay[4]	CLK0, nCLK0 or CLK1, nCLK1 to any Qx, nQx Outputs	SMODEA/B[1:0] = 00	0.275		0.75	ns
			SMODEA/B[1:0] = 01	0.275		0.75	ns
			SMODEA/B[1:0] = 10	0.9		2.80	ns
*t*sk(o)	Output Skew[5] [6]					80	ps
*t*sk(pp)	Part-to-Part Skew[6] [7]				200		ps
V_{OH}	Voltage High[8] [9]	HCSL Outputs	T_A = 25°C, DC Measurement, R_T = 50Ω to GND $C_L \leq$ 5pF	520		920	mV
V_{OL}	Voltage Low[8] [10]	HCSL Outputs		-150		150	mV
V_{CROSS}	Absolute Crossing Voltage[8] [11] [12]	HCSL Outputs	R_T = 50Ω to GND $C_L \leq$ 5pF	160		460	mV
ΔV_{CROSS}	Total Variation of V_{CROSS} over all Edges[8] [11] [13]	HCSL Outputs				140	mV
	Rise/Fall Edge Rate[3] [14] [15]	HCSL Outputs		0.6		4.0	V/ns
t_R / t_F	Output Rise/Fall Time	LVPECL Outputs	20% to 80%		150	300	ps
		LVDS Outputs	20% to 80%		150	300	ps
		HCSL Outputs	20% to 80%		400	650	ps
		REFOUT	20% to 80%		450	750	ps
odc	Output Duty Cycle[16]		With Crystal Input	45		55	%
			With external 50%/ 50% Duty Cycle Clock Input	45		55	%
$MUX_{ISOLATION}$	MUX Isolation		156.25MHz		75		dB

NOTE 1. Electrical parameters are guaranteed over the specified ambient operating temperature range, which is established when the device is mounted in a test socket with maintained transverse airflow greater than 500 lfpm. The device will meet specifications after thermal equilibrium has been reached under these conditions.

NOTE 2. All LVDS and LVPECL parameters characterized up to 1.5GHz. HCSL parameters characterized up to 250MHz.

© 2019 Renesas Electronics Corporation

chanhvinh.com

NOTE 3. Measurement taken from differential waveform.

NOTE 4. Measured from the differential input crosspoint to the differential output crosspoint.

NOTE 5. Defined as skew between outputs at the same supply voltage and with equal load conditions. Measured at the differential crosspoint.

NOTE 6. This parameter is defined in accordance with JEDEC Standard 65.

NOTE 7. Defined as skew between outputs on different devices operating at the same supply voltage, same temperature, same frequency and with equal load conditions. Using the same type of inputs on each device, the outputs are measured at the differential crosspoint

NOTE 8. Measurement taken from single-ended waveform.

NOTE 9. Defined as the maximum instantaneous voltage including overshoot.

NOTE 10. Defined as the minimum instantaneous voltage including undershoot.

NOTE 11. Measured at crosspoint where the instantaneous voltage value of the rising edge of Qx equals the falling edge of nQx.

NOTE 12. Refers to the total variation from the lowest crosspoint to the highest, regardless of which edge is crossing. Refers to all crosspoint for this measurement.

NOTE 13. Defined as the total variation of all crossing voltages of rising Qx and falling nQx, This is the maximum allowed variance in Vcross for any particular system.

NOTE 14. Measured from -150mV to +150mV on the differential waveform (Qx minus nQx). The signal must be monotonic through the measurement region for rise and fall time. The 300mV measurement window is centered on the differential zero crossing.

NOTE 15. Measured at 100MHz.

NOTE 16. Measured for the following frequencies: 25MHz, 100MHz, 125MHz, 156.25MHz, 312.5MHz, 400MHz, and 644.5313MHz.

chanhvinh.com

chanhvinh.com

Additive Phase Jitter

The spectral purity in a band at a specific offset from the fundamental compared to the power of the fundamental is called the ***dBc Phase Noise.*** This value is normally expressed using a Phase noise plot and is most often the specified plot in many applications. Phase noise is defined as the ratio of the noise power present in a 1Hz band at a specified offset from the fundamental frequency to the power value of the fundamental. This ratio is expressed in decibels (dBm) or a ratio of the power in the 1Hz band to the power in the fundamental. When the required offset is specified, the phase noise is called a ***dBc*** value, which simply means dBm at a specified offset from the fundamental. By investigating jitter in the frequency domain, we get a better understanding of its effects on the desired application over the entire time record of the signal. It is mathematically possible to calculate an expected bit error rate given a phase noise plot.

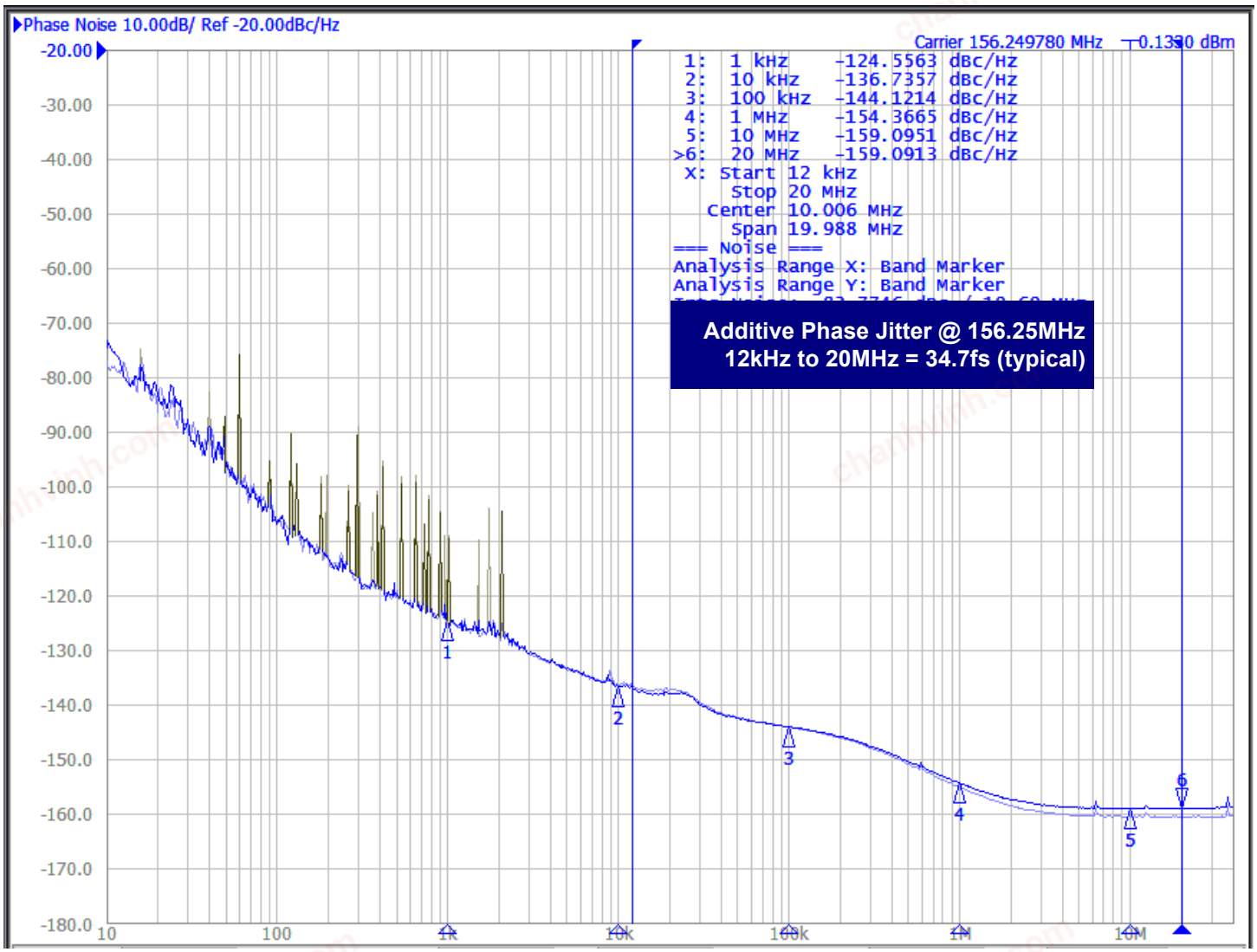

As with most timing specifications, phase noise measurements have issues relating to the limitations of the measurement equipment. The noise floor of the equipment can be higher or lower than the noise floor of the device. Additive phase noise is dependent on both the noise floor of the input source and measurement equipment.

The additive phase jitter for this device was measured using an IDT Clock Driver 8T49NS010A as an input source and Agilent E5052 phase noise analyzer.

chanhvinh.com

Applications Information

Recommendations for Unused Input and Output Pins

Inputs:

CLK/nCLK Inputs

For applications not requiring the use of the differential input, both CLK and nCLK can be left floating. Though not required, but for additional protection, 1kΩ resistors can be tied from CLK to ground and nCLK to V_{DD}.

Crystal Inputs

For applications not requiring the use of the crystal oscillator input, both XTAL_IN and XTAL_OUT can be left floating. Though not required, but for additional protection, a 1kΩ resistor can be tied from XTAL_IN to ground.

LVCMOS Control Pins

All control pins have internal pulldowns; additional resistance is not required but can be added for additional protection. A 1kΩ resistor can be used.

Outputs:

LVCMOS Output (REFOUT)

If LVCMOS output is not used, then disable the output and it can be left floating.

LVPECL and HCSL Outputs

Any unused output pairs can be left floating. We recommend that there is no trace attached.

LVDS Outputs

Any unused LVDS output pairs can be either left floating or terminated with 100Ω across. If they are left floating, we recommend that there is no trace attached.

Differential Outputs

If all the outputs of any bank are not used, then disable all outputs to High-Impedance.

Crystal Input Interface

The 8T39S11A has been characterized with 18pF parallel resonant crystals. The capacitor values, C1 and C2, shown in *Figure 1* below were determined using an 18pF parallel resonant crystal and were chosen to minimize the ppm error. In addition, the recommended 12pF parallel resonant crystal tuning is shown in *Figure 2.*The optimum C1 and C2 values can be slightly adjusted for different board layouts.

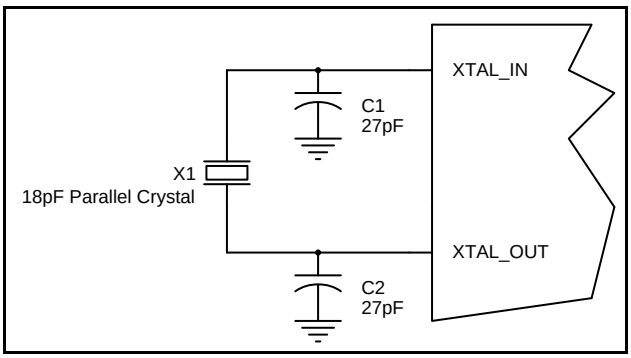

Figure 1: Crystal Input Interface

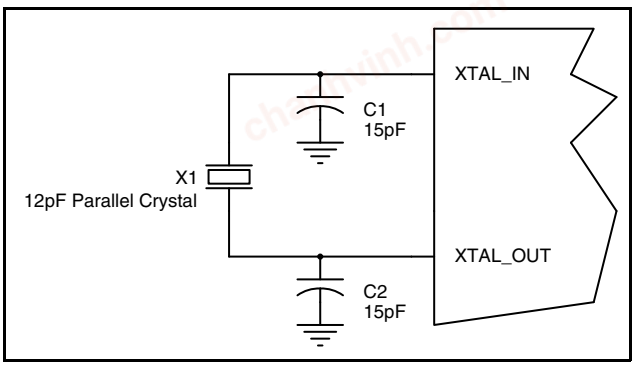

Figure 2: Crystal Input Interface

Power Up Ramp Sequence

This device has multiple supply pins dedicated for different blocks. Output power supplies V_{DDOx} (V_{DDOA}, V_{DDOB}, V_{DDOREF}) must ramp up before, or concurrently with core power supply V_{DD}. All power supplies must ramp up in a linear fashion and monotonically. Both V_{DDOA} and V_{DDOB} power supplies must be powered-up even when only one bank of outputs is in use.

chanhvinh.com

Overdriving the XTAL Interface

The XTAL_IN input can be overdriven by an LVCMOS driver or by one side of a differential driver through an AC coupling capacitor. The XTAL_OUT pin can be left floating. The amplitude of the input signal should be between 500mV and 1.8V and the slew rate should not be less than 0.2V/ns. For 3.3V LVCMOS inputs, the amplitude must be reduced from full swing to at least half the swing in order to prevent signal interference with the power rail and to reduce internal noise. Figure 3 shows an example of the interface diagram for a high speed 3.3V LVCMOS driver. This configuration requires that the sum of the output impedance of the driver (Ro) and the series resistance (Rs) equals the transmission line impedance. In addition, matched termination at the crystal input will attenuate the signal in half. This can be done in one of two ways. First, R1 and R2 in parallel should equal the transmission line impedance. For most 50Ω applications, R1 and R2 can be 100Ω. This can also be accomplished by removing R1 and changing R2 to 50Ω. The values of the resistors can be increased to reduce the loading for a slower and weaker LVCMOS driver. Figure 4 shows an example of the interface diagram for an LVPECL driver. This is a standard LVPECL termination with one side of the driver feeding the XTAL_IN input. It is recommended that all components in the schematics be placed in the layout. Though some components might not be used, they can be utilized for debugging purposes. The datasheet specifications are characterized and guaranteed by using a quartz crystal as the input.

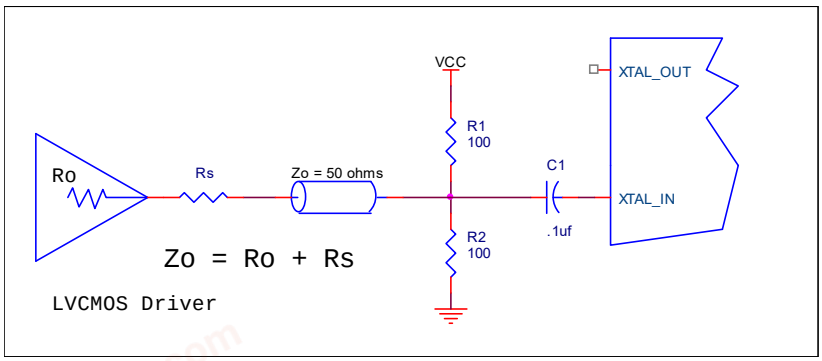

Figure 3: General Diagram for LVCMOS Driver to XTAL Input Interface

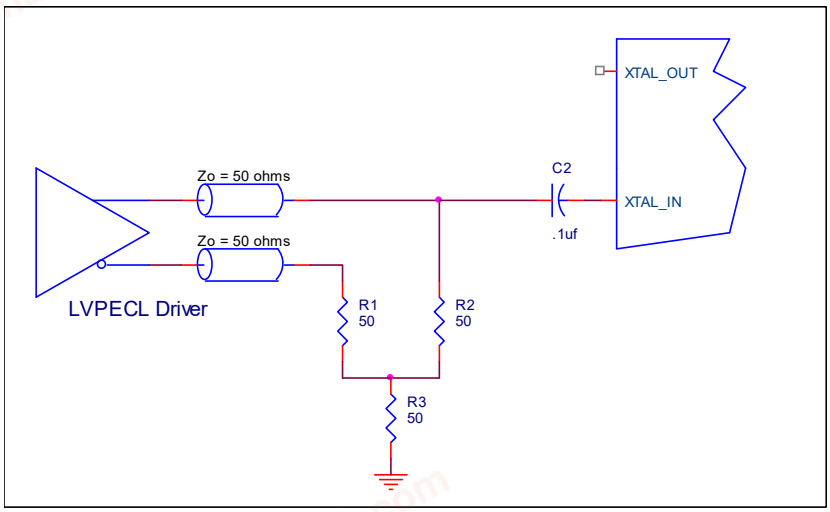

Figure 4: General Diagram for LVPECL Driver to XTAL Input Interface

chanhvinh.com

Wiring the Differential Input to Accept Single-Ended Levels

Figure 5 shows how a differential input can be wired to accept single ended levels. The reference voltage $V_1 = V_{DD}/2$ is generated by the bias resistors R1 and R2. The bypass capacitor (C1) is used to help filter noise on the DC bias. This bias circuit should be located as close to the input pin as possible. The ratio of R1 and R2 might need to be adjusted to position the V_1 in the center of the input voltage swing. For example, if the input clock swing is 2.5V and V_{DD} = 3.3V, R1 and R2 value should be adjusted to set V_1 at 1.25V. The values below are for when both the single ended swing and V_{DD} are at the same voltage. This configuration requires that the sum of the output impedance of the driver (Ro) and the series resistance (Rs) equals the transmission line impedance. In addition, matched termination at the input will attenuate the signal in half. This can be done in one of two ways. First, R3 and R4 in parallel should equal the transmission line impedance. For most 50Ω applications, R3 and R4 can be 100Ω.

The values of the resistors can be increased to reduce the loading for slower and weaker LVCMOS driver. When using single-ended signaling, the noise rejection benefits of differential signaling are reduced. Even though the differential input can handle full rail LVCMOS signaling, it is recommended that the amplitude be reduced. The datasheet specifies a lower differential amplitude, however this only applies to differential signals. For single-ended applications, the swing can be larger, however V_{IL} cannot be less than -0.3V and V_{IH} cannot be more than V_{DD} + 0.3V. Suggest edge rate faster than 1V/ns. Though some of the recommended components might not be used, the pads should be placed in the layout. They can be utilized for debugging purposes. The datasheet specifications are characterized and guaranteed by using a differential signal.

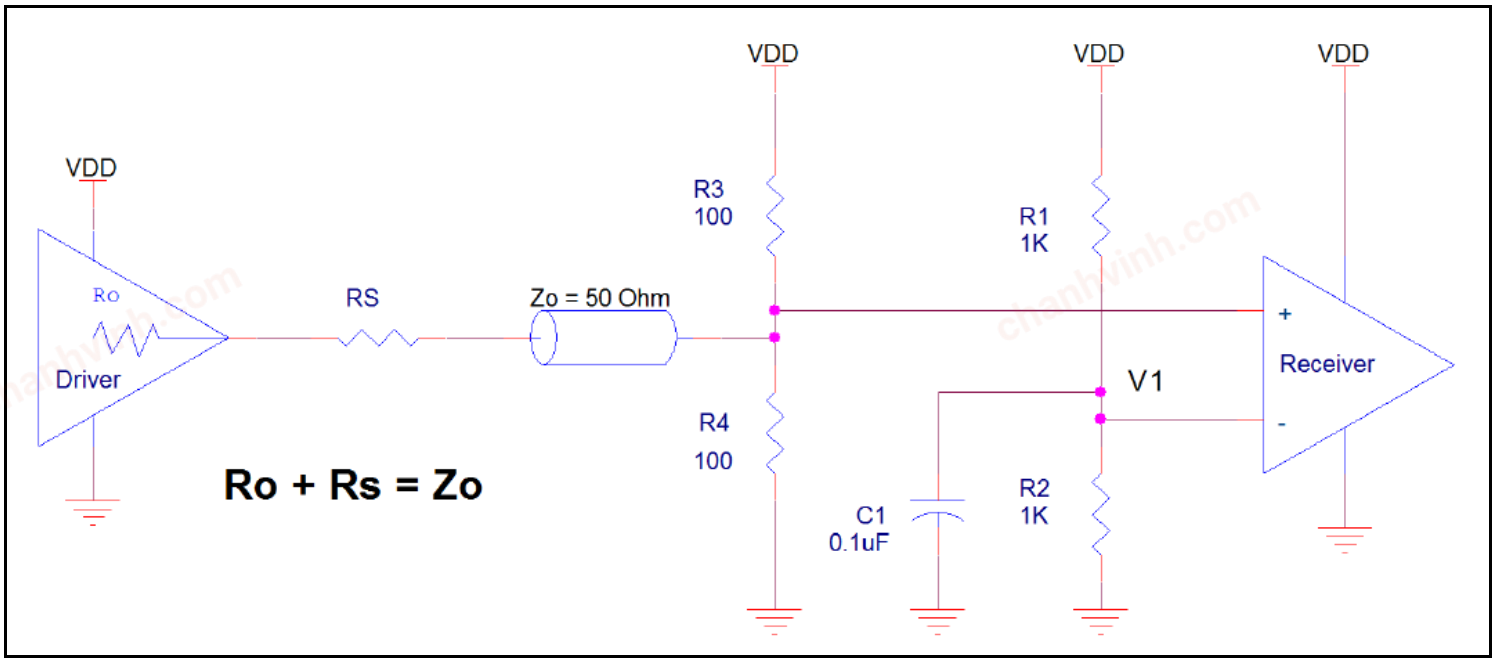

Figure 5: Recommended Schematic for Wiring a Differential Input to Accept Single-ended Levels

chanhvinh.com

3.3V Differential Clock Input Interface

The CLK /nCLK accepts LVDS, LVPECL, HCSL and other differential signals. Both differential signals must meet the V_{PP} and V_{CMR} input requirements. *Figure 6 to* Figure 9 show interface examples for the CLK/nCLK input driven by the most common driver types. The input interfaces suggested here are examples only. Please consult with the vendor of the driver component to confirm the driver termination requirements.

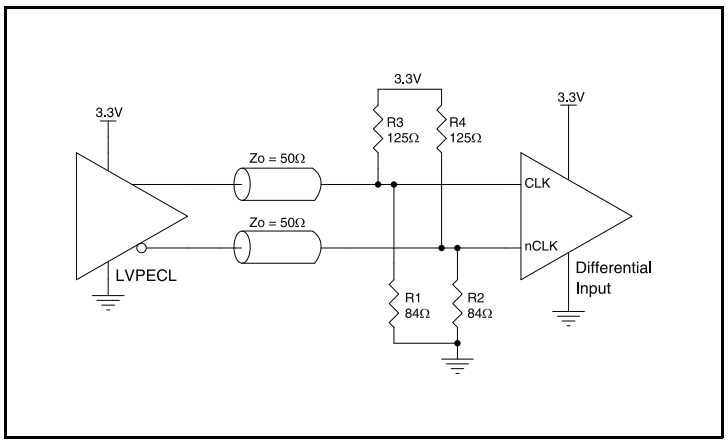

Figure 6: CLK/nCLK Input Driven by a 3.3V LVPECL Driver

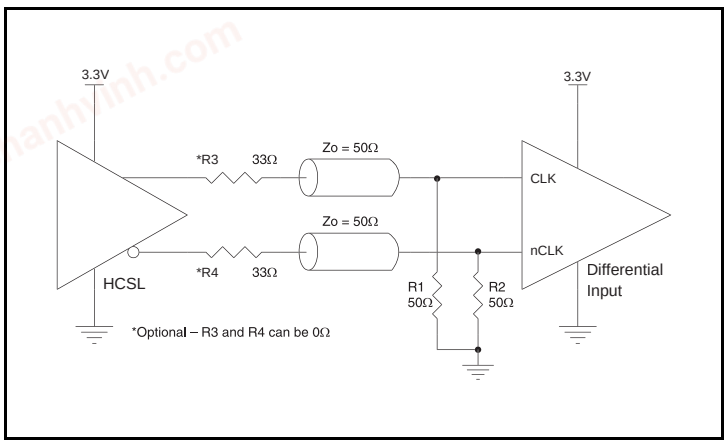

Figure 8: CLK/nCLK Input Driven by a 3.3V LVPECL Driver

Figure 7: CLK/nCLK Input Driven by a 3.3V HCSL Driver

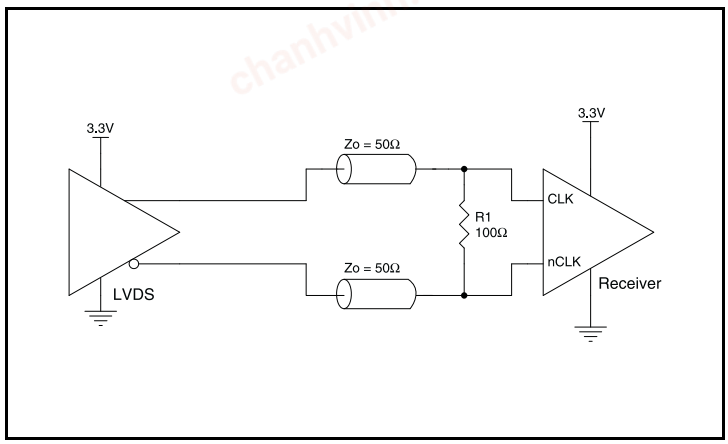

Figure 9: CLK/nCLK Input Driven by a 3.3V LVDS Driver

chanhvinh.com

2.5V Differential Clock Input Interface

The CLK /nCLK accepts LVDS, LVPECL, HCSL and other differential signals. Both differential signals must meet the V_{PP} and V_{CMR} input requirements. Figure 10 *to* Figure 13 show interface examples for the CLK/nCLK input driven by the most common driver types. The input interfaces suggested here are examples only. Please consult with the vendor of the driver component to confirm the driver termination requirements.

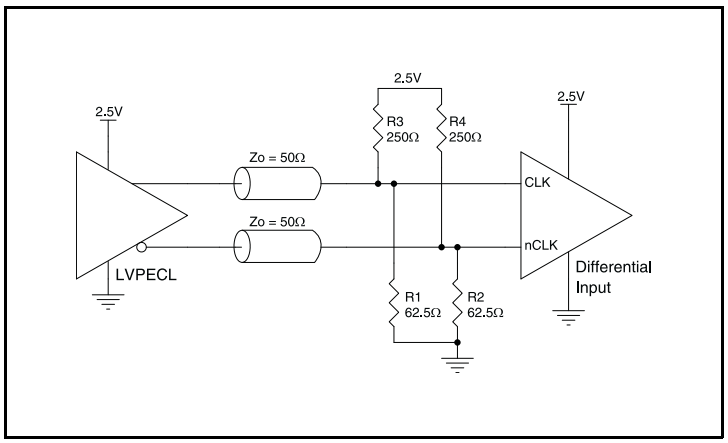

Figure 10: CLK/nCLK Input Driven by a 2.5V LVPECL Driver

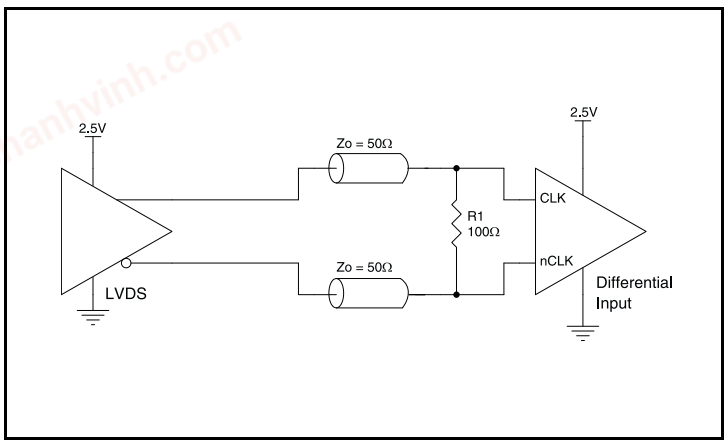

Figure 11: CLK/nCLK Input Driven by a 2.5V LVDS Driver

Figure 12: CLK/nCLK Input Driven by a 2.5V LVPECL Driver

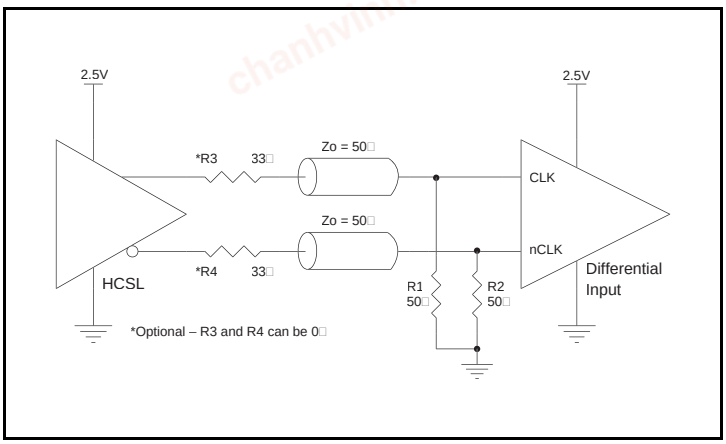

Figure 13: CLK/nCLK Input Driven by a 2.5V HCSL Driver

chanhvinh.com

LVDS Driver Termination

For a general LVDS interface, the recommended value for the termination impedance (Z_T) is between 90Ω and 132Ω. The actual value should be selected to match the differential impedance (Z_0) of your transmission line. A typical point-to-point LVDS design uses a 100Ω parallel resistor at the receiver and a 100Ω differential transmission-line environment. In order to avoid any transmission-line reflection issues, the components should be surface mounted and must be placed as close to the receiver as possible. IDT offers a full line of LVDS compliant devices with two types of output structures: current source and voltage source. The standard termination schematic as shown in Figure 14 can be used with either type of output structure. Figure 15, which can also be used with both output types, is an optional termination with center tap capacitance to help filter common mode noise. The capacitor value should be approximately 50pF. If using a non-standard termination, it is recommended to contact IDT and confirm if the output structure is current source or voltage source type. In addition, since these outputs are LVDS compatible, the input receiver's amplitude and common-mode input range should be verified for compatibility with the output.

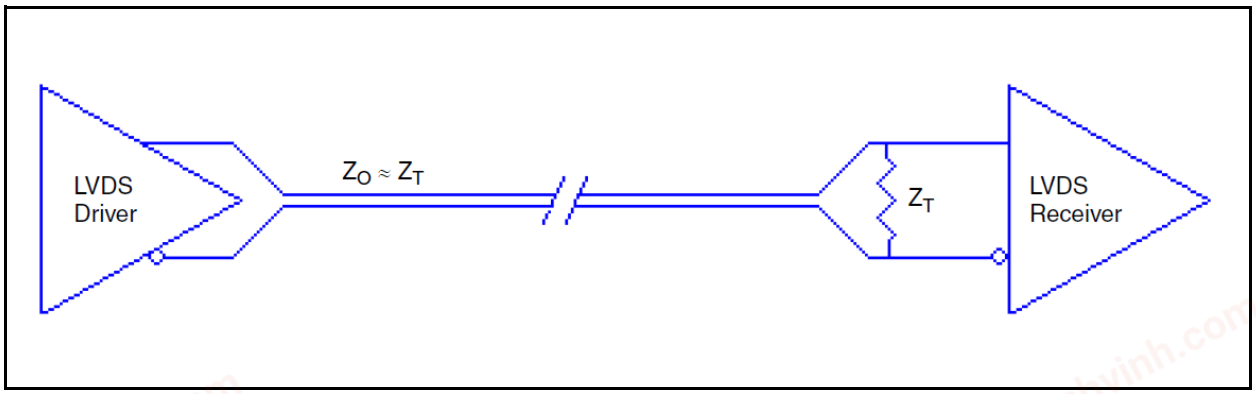

Figure 14: Standard LVDS Termination

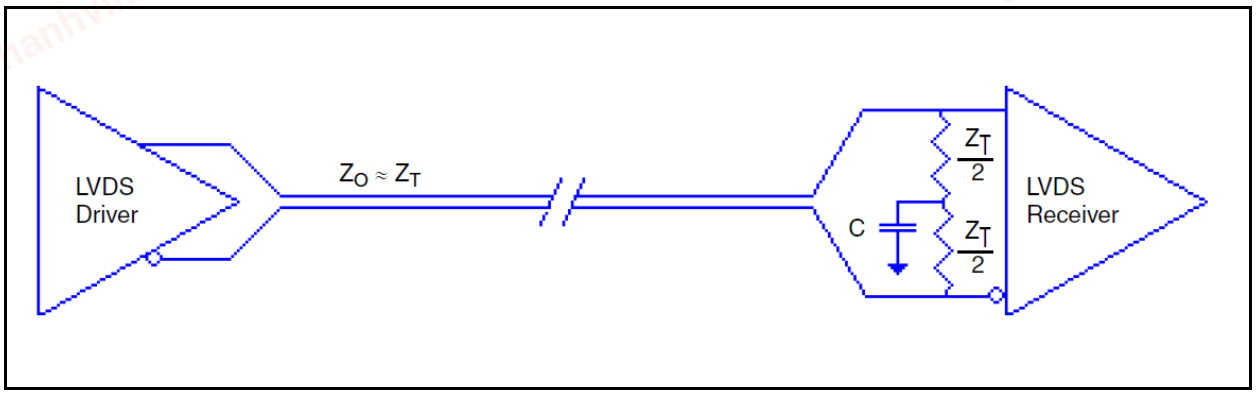

Figure 15: Optional LVDS Termination

chanhvinh.com

Termination for 3.3V LVPECL Outputs

The clock topology shown below is a typical termination for LVPECL outputs. The two different terminations mentioned are recommended only as guidelines.

The differential outputs are low impedance follower outputs that generate ECL/LVPECL compatible outputs. Therefore, terminating resistors (DC current path to ground) or current sources must be used for functionality. These outputs are designed to drive 50Ω transmission lines. Matched impedance techniques should be used to maximize operating frequency and minimize signal distortion.

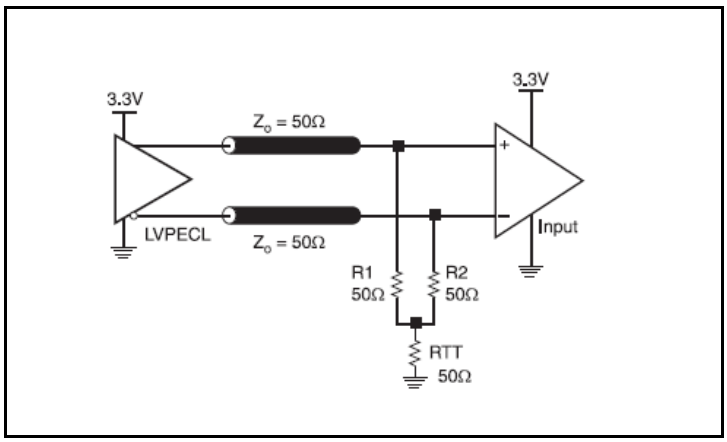

Figure 16: 3.3V LVPECL Output Termination

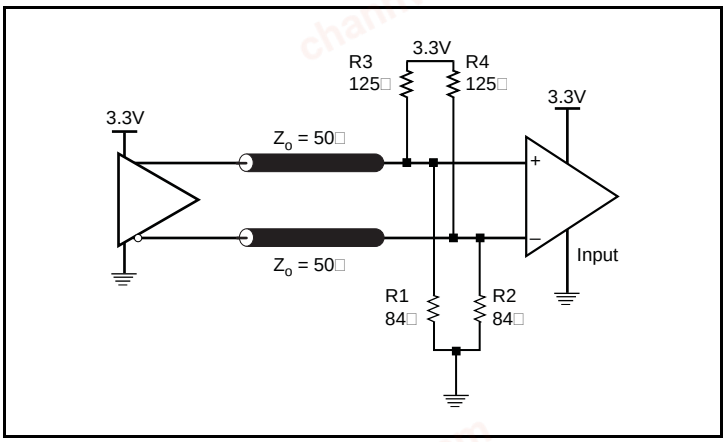

Figure 17: 3.3V LVPECL Output Termination

chanhvinh.com

Termination for 2.5V LVPECL Outputs

Figure 18 and Figure 19 show examples of termination for 2.5V LVPECL driver. These terminations are equivalent to terminating 50Ω to V_{DDO} – 2V. For V_{DDO} = 2.5V, the V_{DDO} – 2V is very close to ground level. The R3 in Figure 19 can be eliminated and the termination is shown in Figure 20.

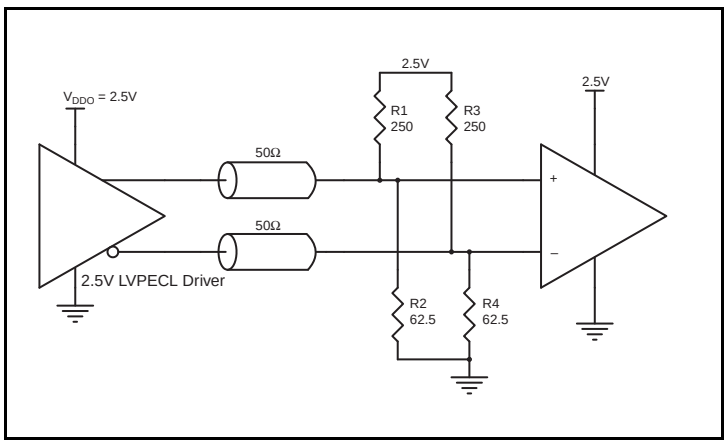

Figure 18: 2.5V LVPECL Driver Termination Example

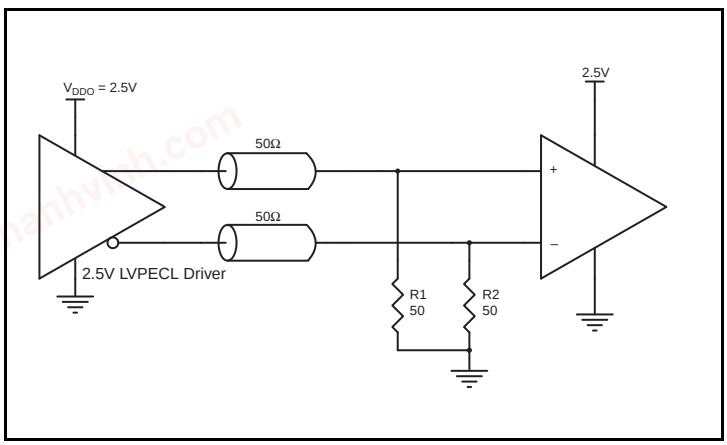

Figure 19: 2.5V LVPECL Driver Termination Example

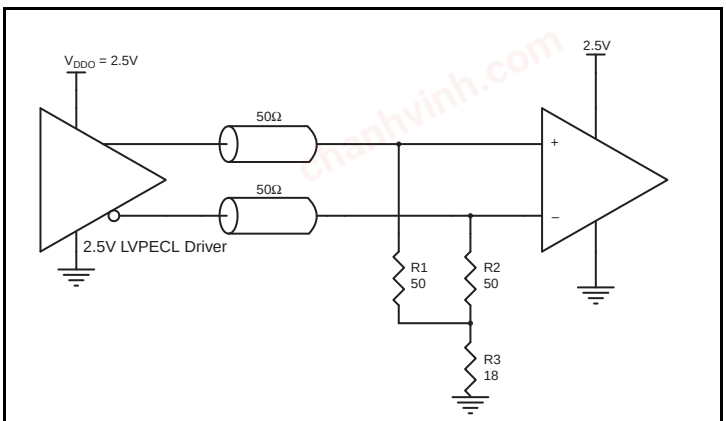

Figure 20: 2.5V LVPECL Driver Termination Example

chanhvinh.com

Recommended Termination

Figure 21 is the recommended source termination for applications where the driver and receiver will be on a separate PCBs. This termination is the standard for PCI Express™ and HCSL output types. All traces should be 50Ω impedance single-ended or 100Ω differential.

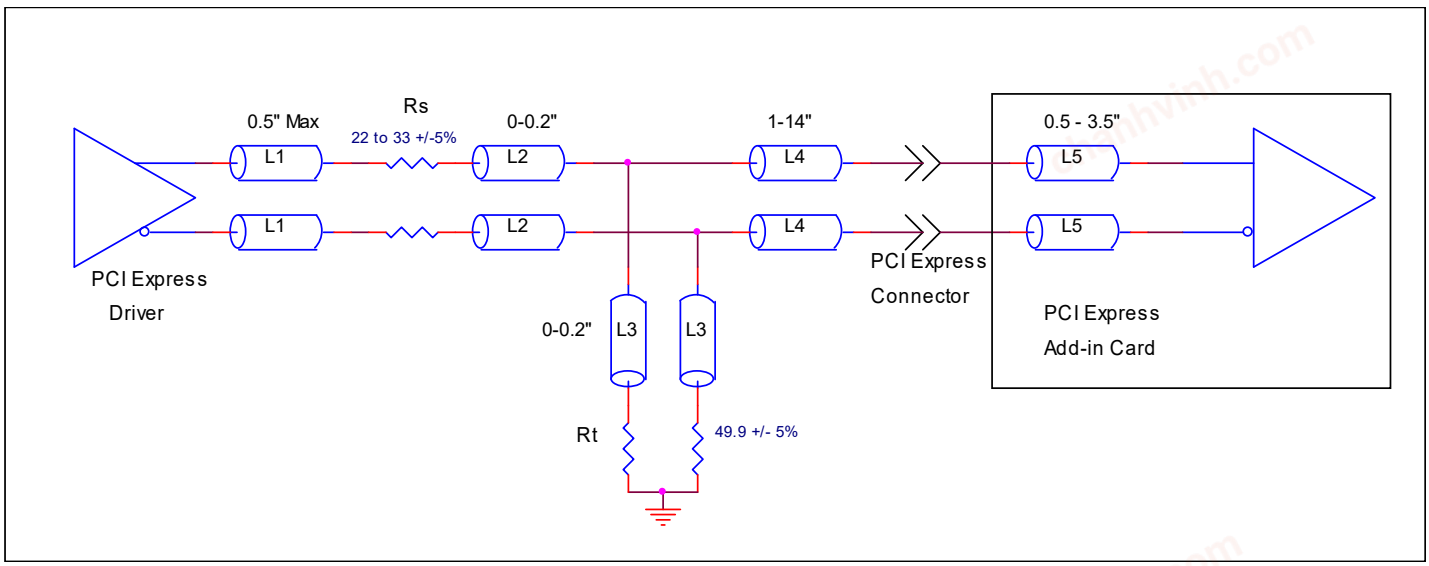

Figure 21: Recommended Source Termination (where the driver and receiver will be on separate PCBs)

Figure 22 is the recommended termination for applications where a point-to-point connection can be used. A point-to-point connection contains both the driver and the receiver on the same PCB. With a matched termination at the receiver, transmission-line reflections will be minimized. In addition, a series resistor (Rs) at the driver offers flexibility and can help dampen unwanted reflections. The optional resistor can range from 0Ω to 33Ω. All traces should be 50Ω impedance single-ended or 100Ω differential.

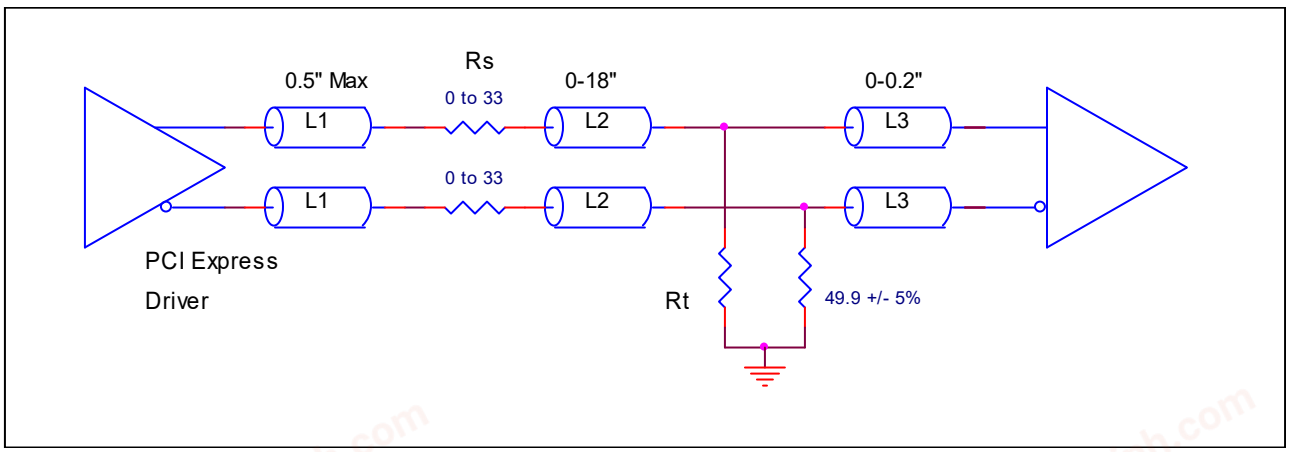

Figure 22: Recommended Termination (where a point-to-point connection can be used)

chanhvinh.com

VFQFN EPAD Thermal Release Path

In order to maximize both the removal of heat from the package and the electrical performance, a land pattern must be incorporated on the Printed Circuit Board (PCB) within the footprint of the package corresponding to the exposed metal pad or exposed heat slug on the package, as shown in *Figure 23*. The solderable area on the PCB, as defined by the solder mask, should be at least the same size/shape as the exposed pad/slug area on the package to maximize the thermal/electrical performance. Sufficient clearance should be designed on the PCB between the outer edges of the land pattern and the inner edges of pad pattern for the leads to avoid any shorts.

While the land pattern on the PCB provides a means of heat transfer and electrical grounding from the package to the board through a solder joint, thermal vias are necessary to effectively conduct from the surface of the PCB to the ground plane(s). The land pattern must be connected to ground through these vias. The vias act as “heat pipes”. The number of vias (i.e. “heat pipes”) are application specific and dependent upon the package power dissipation as well as electrical conductivity requirements. Thus, thermal and electrical analysis and/or testing are recommended to determine the minimum number needed. Maximum thermal and electrical performance is achieved when an array of vias is incorporated in the land pattern. It is recommended to use as many vias connected to ground as possible. It is also recommended that the via diameter should be 12 to 13mils (0.30 to 0.33mm) with 1oz copper via barrel plating. This is desirable to avoid any solder wicking inside the via during the soldering process which may result in voids in solder between the exposed pad/slug and the thermal land. Precautions should be taken to eliminate any solder voids between the exposed heat slug and the land pattern. Note: These recommendations are to be used as a guideline only. For further information, please refer to the Application Note on the Surface Mount Assembly of Amkor’s Thermally/ Electrically Enhance Lead frame Base Package, Amkor Technology.

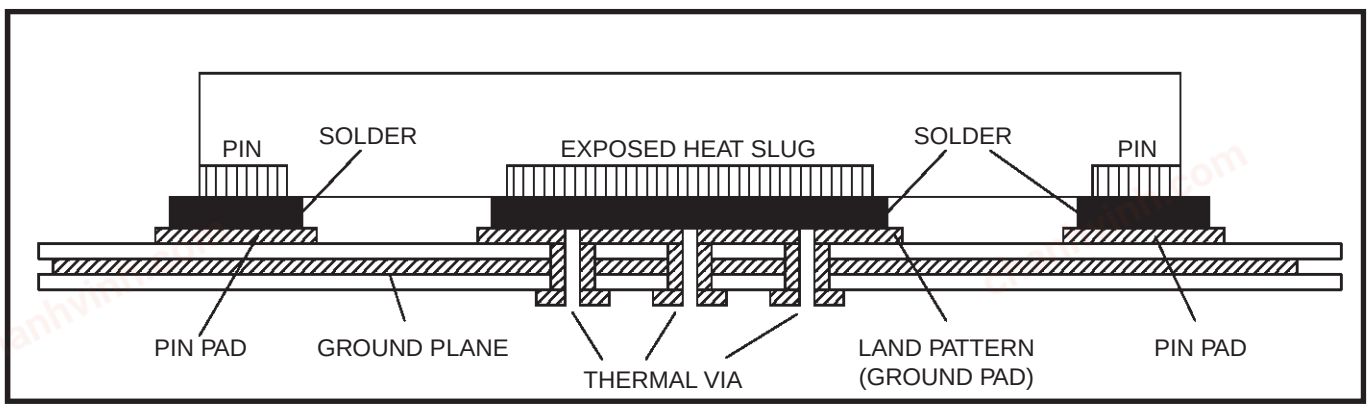

Figure 23: P.C. Assembly for Exposed Pad Thermal Release Path – Side View (drawing not to scale)

chanhvinh.com

LVPECL Power Considerations

This section provides information on power dissipation and junction temperature for the 8T39S11A.
Equations and example calculations are also provided.

LVPECL Power Considerations

1. Power Dissipation.

The total power dissipation for the 8T39S11A is the sum of the core power plus the power dissipated due to outputs switching.
The following is the power dissipation for V_{DD} = 3.3V + 5% = 3.465V, which gives worst case results.

The Maximum current at 85°C is as follows:

I_{EE_MAX} = 186.34mA

- Power (core)$_{MAX}$ = I_{EE_MAX} * V_{DD_MAX} = 3.465V * 186.34mA = **645.67mW**
- Power (outputs)$_{MAX}$ = **32mW/Loaded Output pair**

If all outputs are loaded, the total output power is 10 * 32mW = **320mW**

Max LVPECL Power Dissipation = 645.67mW + 320mW = **965.67mW**

LVCMOS Output Power Dissipation

- Static Power Dissipation:
  Power (static)_max = V_{DDOREF_max} * I_{DDREF_max} = 3.465V * 2mA **= 6.93mW**
  (I_{DDREF_max} = 2mA)
- Dynamic Power Dissipation at 250MHz:
  Power (Dynamic)_max = C_{PD} * f_{MAX} * N * V_{DDOREF}^2 = 5.3pF * 250MHz * 1 * 3.465^2 = **15.9mW**
- LVCMOS Power Dissipation = 6.93mW + 15.9mW = **22.84mW**

Total Power Dissipation = 965.67mW + 22.84mW = **988.51mW**

2. Junction Temperature.

Junction temperature, Tj, is the temperature at the junction of the bond wire and bond pad directly affects the reliability of the device. The maximum recommended junction temperature is 125°C. Limiting the internal transistor junction temperature, Tj, to 125°C ensures that the bond wire and bond pad temperature remains below 125°C.

The equation for Tj is as follows: Tj = θ_{JA} * Pd_total + T_A

Tj = Junction Temperature

θ_{JA} = Junction-to-Ambient Thermal Resistance

Pd_total = Total Device Power Dissipation (example calculation is in section 1 above)

T_A = Ambient Temperature

In order to calculate junction temperature, the appropriate junction-to-ambient thermal resistance θ_{JA} must be used. Assuming no air flow and a multi-layer board, the appropriate value is 30.5°C/W per Table 23 below. Therefore, Tj for an ambient temperature of 85°C with all outputs switching is:

85°C + 0.9885W * 30.5°C/W = 115.15°C. This is below the limit of 125°C.

This calculation is only an example. Tj will obviously vary depending on the number of loaded outputs, supply voltage, air flow and the type of board (multi-layer).

Table 23: Thermal Resistance θ_{JA} for 48-Lead VFQFN

θ_{JA} vs. Air Flow			
Meters per Second	**0**	**1**	**2.5**
Multi-Layer PCB, JEDEC Standard Test Boards	30.5°C/W	26.7°C/W	23.9°C/W

chanhvinh.com

3. Calculations and Equations.

The purpose of this section is to calculate the power dissipation for the LVPECL output pairs.

LVPECL output driver circuit and termination are shown in Figure 24.

Figure 24: LVPECL Driver Circuit and Termination

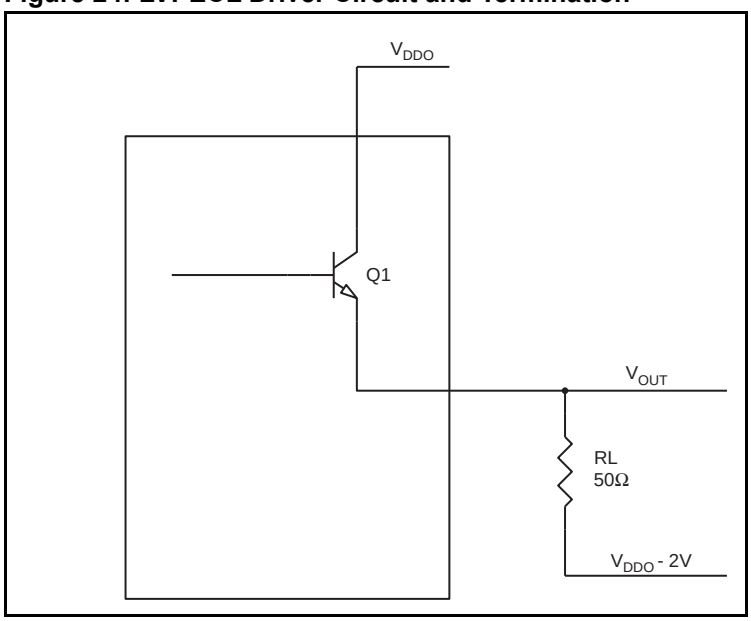

To calculate power dissipation per output pair due to loading, use the following equations which assume a 50Ω load, and a termination voltage of V_{DDO} – 2V.

- For logic high, $V_{OUT} = V_{OH_MAX} = \mathbf{V_{DDO_MAX} - 0.8V}$
  $(V_{DDO_MAX} - V_{OH_MAX}) = \mathbf{0.8V}$
- For logic low, $V_{OUT} = V_{OL_MAX} = \mathbf{V_{DDO_MAX} - 1.6V}$
  $(V_{DDO_MAX} - V_{OL_MAX}) = \mathbf{1.6V}$

Pd_H is power dissipation when the output drives high.

Pd_L is the power dissipation when the output drives low.

$Pd_H = [(V_{OH_MAX} - (V_{DDO_MAX} - 2V))/R_L] * (V_{DDO_MAX} - V_{OH_MAX}) = [(2V - (V_{DDO_MAX} - V_{OH_MAX}))/R_L] * (V_{DDO_MAX} - V_{OH_MAX}) = [(2V - 0.8V)/50\Omega] * 0.8V =$ **19.20mW**

$Pd_L = [(V_{OL_MAX} - (V_{DDO_MAX} - 2V))/R_L] * (V_{DDO_MAX} - V_{OL_MAX}) = [(2V - (V_{DDO_MAX} - V_{OL_MAX}))/R_L] * (V_{DDO_MAX} - V_{OL_MAX}) = [(2V - 1.6V)/50\Omega] * 1.6V =$ **12.80mW**

Total Power Dissipation per output pair = Pd_H + Pd_L = 32mW

chanhvinh.com

LVDS Power Considerations

This section provides information on power dissipation and junction temperature for the 8T39S11A.
Equations and example calculations are also provided.

LVDS Power Considerations

1. Power Dissipation.

The total power dissipation for the 8T39S11A is the sum of the core power plus the power dissipated due to outputs switching.
The following is the power dissipation for V_{DD} = 3.3V + 5% = 3.465V, which gives worst case results.

The Maximum current at 85°C is as follows:

I_{DD_MAX} = 106.9mA

I_{DDO_MAX} = 221.5mA

Max LVDS Power Dissipation = V_{DD_MAX} * (I_{DD_MAX} + I_{DDO_MAX}) = 3.465V * (106.9mA + 221.5mA) = **1137.9mW**

LVCMOS Output Power Dissipation

- Static Power Dissipation:
  Power (static)_max = V_{DDOREF_max} * I_{DDREF_max} = 3.465V * 2mA **= 6.93mW**
  (I_{DDREF_max} = 2mA)
- Dynamic Power Dissipation at 250MHz:
  Power (Dynamic)_max = C_{PD} * f_{MAX} * N * V_{DDOREF}^2 = 5.3pF * 250MHz * 1 * 3.465^2 = **15.9mW**
- LVCMOS Power Dissipation = 6.93mW + 15.9mW = **22.84mW**

Total Power Dissipation = 1137.9mW + 22.84mW = **1160.75mW**

2. Junction Temperature.

Junction temperature, Tj, is the temperature at the junction of the bond wire and bond pad directly affects the reliability of the device. The maximum recommended junction temperature is 125°C. Limiting the internal transistor junction temperature, Tj, to 125°C ensures that the bond wire and bond pad temperature remains below 125°C.

The equation for Tj is as follows: Tj = θ_{JA} * Pd_total + T_A

Tj = Junction Temperature

θ_{JA} = Junction-to-Ambient Thermal Resistance

Pd_total = Total Device Power Dissipation (example calculation is in section 1 above)

T_A = Ambient Temperature

In order to calculate junction temperature, the appropriate junction-to-ambient thermal resistance θ_{JA} must be used. Assuming no air flow and a multi-layer board, the appropriate value is 30.5°C/W per Table 24. Therefore, Tj for an ambient temperature of 85°C with all outputs switching is:

85°C + 1.161W * 30.5°C/W = 120.4°C. This is below the limit of 125°C.

This calculation is only an example. Tj will obviously vary depending on the number of loaded outputs, supply voltage, air flow and the type of board (multi-layer).

Table 24: Thermal Resistance θ_{JA} for 48-Lead VFQFN

θ_{JA} vs. Air Flow			
Meters per Second	**0**	**1**	**2.5**
Multi-Layer PCB, JEDEC Standard Test Boards	30.5°C/W	26.7°C/W	23.9°C/W

chanhvinh.com

HCSL Power Considerations

This section provides information on power dissipation and junction temperature for the 8T39S11A. Equations and example calculations are also provided.

HCSL Power Considerations

1. Power Dissipation.

The total power dissipation for the 8T39S11A is the sum of the core power plus the power dissipated due to outputs switching. The following is the power dissipation for V_{DD} = 3.3V + 5% = 3.465V, which gives worst case results.

The Maximum current at 85°C is as follows:

I_{DD_MAX} = 96.63mA

I_{DDO_MAX} = 85mA (Application Frequency = 250MHz)

- Power $(core)_{MAX} = V_{DD_MAX} * (I_{DD_MAX} + I_{DDO_MAX})$ = 3.465V * (96.63mA + 85mA) = **629.35mW**
- Power $(outputs)_{MAX}$ = **44.5mW/Loaded Output pair**

If all outputs are loaded, the total power is 10 * 44.5mW = **445mW**

Max HCSL Power Dissipation = 629.35mW + 445mW = 1074.35mW

LVCMOS Output Power Dissipation

- Static Power Dissipation:
  Power (static)_max = $V_{DDOREF_max} * I_{DDREF_max}$ = 3.465V * 2mA **= 6.93mW**
  (I_{DDREF_max} = 2mA)
- Dynamic Power Dissipation at 250MHz:
  Power (Dynamic)_max = $C_{PD} * f_{MAX} * N * V_{DDOREF}^2$ = 5.3pF * 250MHz * 1 * 3.465^2 = **15.9mW**
- LVCMOS Power Dissipation = 6.93mW + 15.9mW = **22.84mW**

Total Power Dissipation = 1074.35mW + 22.84mW = **1097.19mW**

2. Junction Temperature.

Junction temperature, Tj, is the temperature at the junction of the bond wire and bond pad directly affects the reliability of the device. The maximum recommended junction temperature is 125°C. Limiting the internal transistor junction temperature, Tj, to 125°C ensures that the bond wire and bond pad temperature remains below 125°C.

The equation for Tj is as follows: $Tj = \theta_{JA} * Pd_total + T_A$

Tj = Junction Temperature

θ_{JA} = Junction-to-Ambient Thermal Resistance

Pd_total = Total Device Power Dissipation (example calculation is in section 1 above)

T_A = Ambient Temperature

In order to calculate junction temperature, the appropriate junction-to-ambient thermal resistance θ_{JA} must be used. Assuming no air flow and a multi-layer board, the appropriate value is 30.5°C/W per Table 25. Therefore, Tj for an ambient temperature of 85°C with all outputs switching is:

85°C + 1.097W * 30.5°C/W = 118.5°C. This is below the limit of 125°C.

This calculation is only an example. Tj will obviously vary depending on the number of loaded outputs, supply voltage, air flow and the type of board (multi-layer).

Table 25: Thermal Resistance θ_{JA} for 48-Lead VFQFN

θ_{JA} vs. Air Flow			
Meters per Second	**0**	**1**	**2.5**
Multi-Layer PCB, JEDEC Standard Test Boards	30.5°C/W	26.7°C/W	23.9°C/W

chanhvinh.com

3. Calculations and Equations.

The purpose of this section is to calculate power dissipation on the IC per HCSL output pair.

HCSL output driver circuit and termination are shown in Figure 25.

Figure 25: HCSL Driver Circuit and Termination

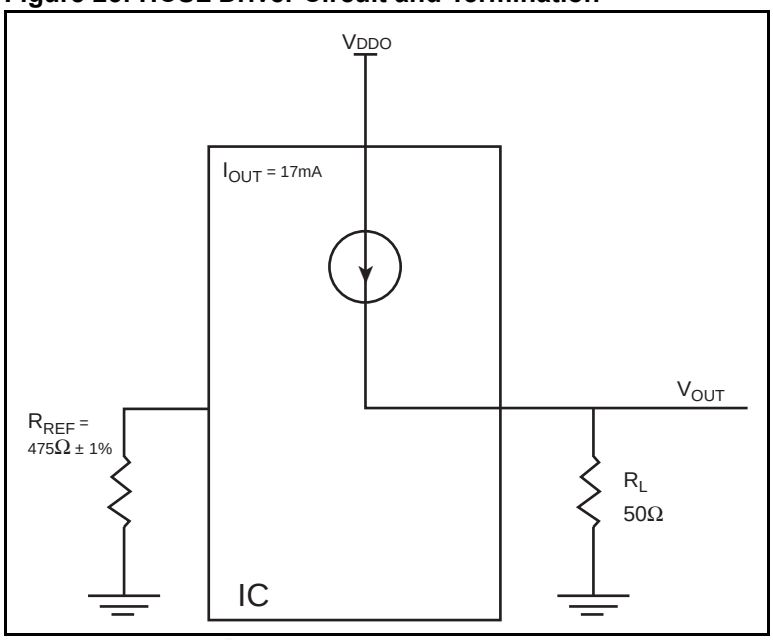

HCSL is a current steering output which sources a maximum of 17mA of current per output. To calculate worst case on-chip power dissipation, use the following equations which assume a 50Ω load to ground.

The highest power dissipation occurs when V_{DDO_MAX}.

Power = $(V_{DDO_MAX} - V_{OUT}) * I_{OUT}$,
since $V_{OUT} - I_{OUT} * R_L$

= $(V_{DDO_MA} - I_{OUT} * R_L) * I_{OUT}$

= (3.465V – 17mA * 50Ω) * 17mA

Total Power Dissipation per output pair = **44.5mW**

chanhvinh.com

Reliability Information

Table 26: θ_{JA} vs. Air Flow Table for a 48-Lead VFQFN

θ_{JA} vs. Air Flow			
Meters per Second	**0**	**1**	**2.5**
Multi-Layer PCB, JEDEC Standard Test Boards	30.5°C/W	26.7°C/W	23.9°C/W

Transistor Count

The transistor count for 8T39S11A is: 10,283

Package Outline Drawings

The package outline drawings are appended at the end of this document and are accessible from the link below. The package information is the most current data available.

www.idt.com/document/psc/48-vfqfpn-package-outline-drawing-70-x-70-x-085-mm-body-05mm-pitchepad-565-x-565-mm-nlg48p1

Ordering Information

Part/Order Number	Marking	Package	Shipping Packaging	Temperature
8T39S11ANLGI	IDT8T39S11ANLGI	48-Lead VFQFN, Lead-Free	Tray	-40°C to 85°C
8T39S11ANLGI8	IDT8T39S11ANLGI	48-Lead VFQFN, Lead-Free	Tape & Reel	-40°C to 85°C

Revision History

Revision Date	Description of Change
November 29, 2018	Updated the description of Absolute Maximum Ratings Added Recommended Operating Conditions Updated the Package Outline Drawings; however, no technical changes
December 17, 2015	Initial release.

chanhvinh.com

48-VFQFPN, Package Outline Drawing

7.0 x 7.0 x 0.85 mm Body, 0.5mm Pitch,Epad 5.65 x 5.65 mm

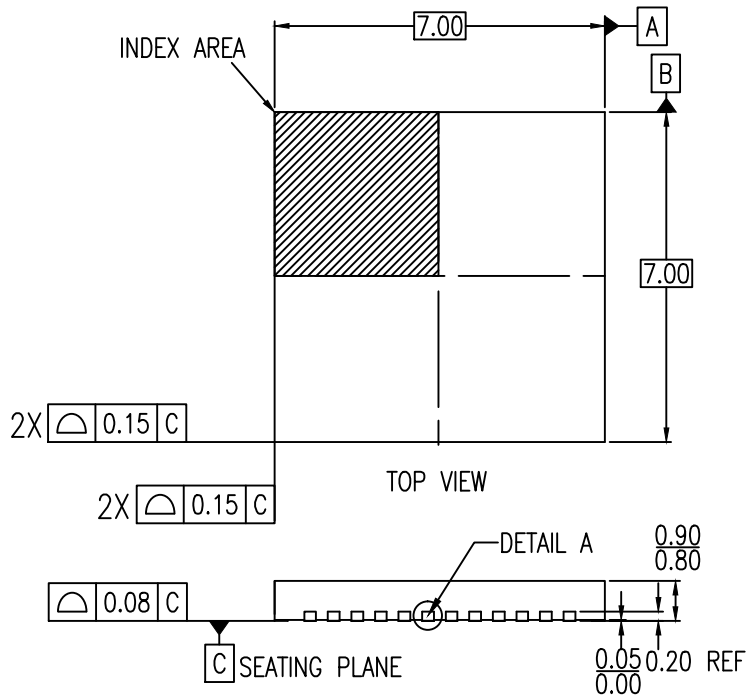

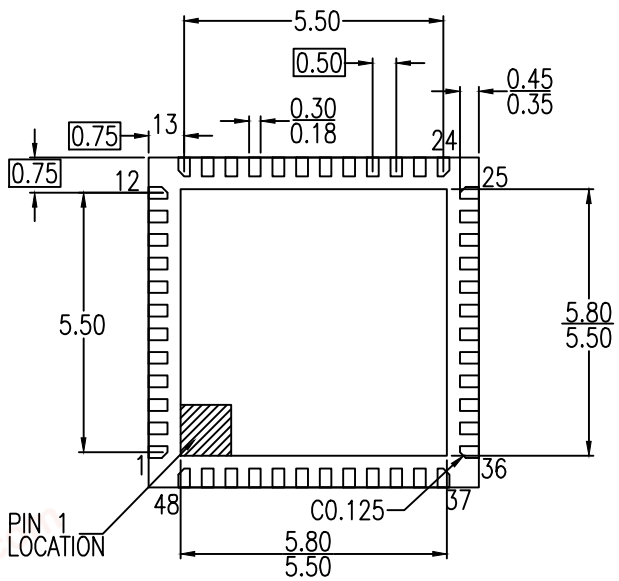

NOTES :
1. ALL DIMENSIONS ARE IN MILLIMETERS.
2. DIMENSIONING & TOLERANCES CONFORM TO ASME Y14.5M. –1994.
3. PIN 1 LOCATION IS IDENTIFIED BY EITHER CHAMFER OR NOTCH.

© Renesas Electronics Corporation

chanhvinh.com

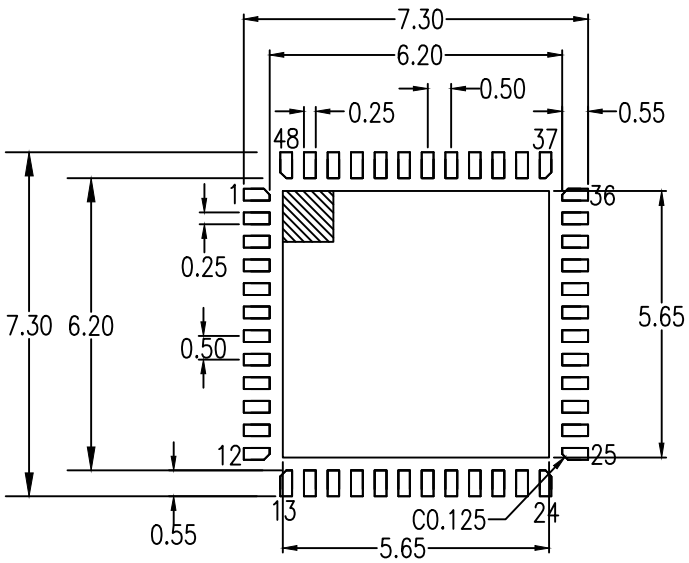

RECOMMENDED LAND PATTERN

NOTES:

1. ALL DIMENSIONS ARE IN MM. ANGLES IN DEGREES.
2. TOP DOWN VIEW. AS VIEWED ON PCB.
3. LAND PATTERN RECOMMENDATION PER IPC-7351B GENERIC REQUIREMENT FOR SURFACE MOUNT DESIGN AND LAND PATTERN.

Package Revision History		
Date Created	Rev No.	Description
May 29, 2018	Rev 02	Add Corner Lead Chamfer
Mar 7, 2018	Rev 01	New Format, Change Pin1 Identifier, Change QFN to VFQFPN
Nov 20, 2015	Rev 00	Initial Release

© Renesas Electronics Corporation

chanhvinh.com

IMPORTANT NOTICE AND DISCLAIMER

RENESAS ELECTRONICS CORPORATION AND ITS SUBSIDIARIES (“RENESAS”) PROVIDES TECHNICAL SPECIFICATIONS AND RELIABILITY DATA (INCLUDING DATASHEETS), DESIGN RESOURCES (INCLUDING REFERENCE DESIGNS), APPLICATION OR OTHER DESIGN ADVICE, WEB TOOLS, SAFETY INFORMATION, AND OTHER RESOURCES “AS IS” AND WITH ALL FAULTS, AND DISCLAIMS ALL WARRANTIES, EXPRESS OR IMPLIED, INCLUDING, WITHOUT LIMITATION, ANY IMPLIED WARRANTIES OF MERCHANTABILITY, FITNESS FOR A PARTICULAR PURPOSE, OR NON-INFRINGEMENT OF THIRD PARTY INTELLECTUAL PROPERTY RIGHTS.

These resources are intended for developers skilled in the art designing with Renesas products. You are solely responsible for (1) selecting the appropriate products for your application, (2) designing, validating, and testing your application, and (3) ensuring your application meets applicable standards, and any other safety, security, or other requirements. These resources are subject to change without notice. Renesas grants you permission to use these resources only for development of an application that uses Renesas products. Other reproduction or use of these resources is strictly prohibited. No license is granted to any other Renesas intellectual property or to any third party intellectual property. Renesas disclaims responsibility for, and you will fully indemnify Renesas and its representatives against, any claims, damages, costs, losses, or liabilities arising out of your use of these resources. Renesas' products are provided only subject to Renesas' Terms and Conditions of Sale or other applicable terms agreed to in writing. No use of any Renesas resources expands or otherwise alters any applicable warranties or warranty disclaimers for these products.

(Rev.1.0 Mar 2020)

Corporate Headquarters

TOYOSU FORESIA, 3-2-24 Toyosu,
Koto-ku, Tokyo 135-0061, Japan
www.renesas.com

Contact Information

For further information on a product, technology, the most up-to-date version of a document, or your nearest sales office, please visit:
www.renesas.com/contact/

Trademarks

Renesas and the Renesas logo are trademarks of Renesas Electronics Corporation. All trademarks and registered trademarks are the property of their respective owners.

© 2020 Renesas Electronics Corporation. All rights reserved.