chanhvinh.com

Technical Data Sheet

RACPRO1-S120 Series ◊ 1AC DIN-Rail Power Supply

120W ◊ Input: 85-277VAC / 88-370VDC

RECOM AC/DC Converter

FEATURES

- Smallest 120W DIN Rail PSU in the market
- Highest Power Density up to 500W/liter
- Slim Design (28mm) with 25° Push-In connectors
- DC-Input Range 88-370VDC
- Highest Efficiency up to 93.3%
- Full Power -40°C/+60°C, Boost Power 150%/5s
- Thermal Power Bonus 120%/45°C
- Lifetime Expectancy 231khrs/ 40°C/ 75% load
- DC-OK Signal
- Reduced no load power consumption 0.2W - 0.3W
- Made in Europe
- 3 year warranty



Dimensions (HxWxD): 100.0 x 28.0 x 112.0mm (3.9 x 1.1 x 4.4 inch)
330g (0.73 lbs)

APPLICATIONS



SAFETY & EMC

RoHS² compliant 10 from 10 | Reach compliant | CE | cULus LISTED E550315 | IECEE CB SCHEME

DESCRIPTION

The slim RACPRO1-S120 is a high reliability, single phase AC input, 120W DIN Rail mount power supply in extremely compact dimensions of 100 x 112mm with a width of only 28mm and 12V, 24V or 48V output. It is specially designed for demanding applications in the harsh industrial automation field with an extended return voltage immunity making it suitable for safe operation against back feeding loads like decelerating motors and inductors. These units will deliver up to 120W over the full -40°C to +60°C ambient temperature range with only convection cooling. An extended power bonus of up to 144W at 45°C plus a power boost of up to 150% for 5s makes them suitable for powering highly inductive or capacitive loads. The unique and innovative modern design with 25° push-in connectors allows easy tool-less installation or replacement. The product is certified according to the global safety standards IEC/EN/UL 61010-1 and IEC/EN/UL/CSA 61010-2-201. Electromagnetic radiated and conducted emissions are compliant to heavy industrial EN 61000-6-3 Class B emission standard and EN 61000-6-2 immunity standard.

SELECTION GUIDE

Part Number	Input Voltage Range [VAC]	Input Voltage Range [VDC]	Output Voltage nom. [VDC]	Adjustable Output Voltage [VDC]	Output Current nom. [A]	Efficiency (1) typ. [%]	rated Output Power (2) [W]
RACPRO1-S120/12	85-277	88-370	12	12-15	8	90.3	96
RACPRO1-S120/24	85-277	88-370	24	24-29	5	93	120
RACPRO1-S120/48	85-277	88-370	48	48-56	2.5	93	120

Note1: Efficiency is tested at nominal input (230VAC) and full load at +25°C ambient.
Note2: Thermal Power Bonus 120% (T_{AMB}= 45°C max.), and Boost Power 150%/5sec max.; refer to **„Boost Power“**.

ACCESSORIES

Part Number	Description	Datasheet Link
RACPRO1-4SP/24V/5A	electronic circuit breaker; 4-channel; input voltage DC 24 V adjustable output current 1.75-5.75A and selectable NEC Class 2 mode	RACPRO1-4SP/24V/5A.pdf
RACPRO1-4SP/24V/10A	electronic circuit breaker; 4-channel; input voltage DC 24 V; adjustable output current 3.5-11.5A	RACPRO1-4SP/24V/10A.pdf
RACPRO1-RD40	highly efficient n+1 redundancy or decoupling diode module 2 x 20A or 1 x 40A for power supplies with 12V, 24V or 48V output voltage	RACPRO1-RD40.pdf

copyright © RECOM Power GmbH, all rights reserved

chanhvinh.com

Technical Data Sheet

RACPRO1-S120 Series ◊ 1AC DIN-Rail Power Supply

120W ◊ Input: 85-277VAC / 88-370VDC

RECOM AC/DC Converter

BASIC CHARACTERISTICS (measured @ T_{AMB}= 25°C, 230VAC full load and after warm-up unless otherwise stated)

Parameter	Condition			Min.	Typ.	Max.
Nominal Input Voltage	50/60Hz			120VAC		240VAC
	DC input			120VDC		240VDC
Operating Range (3)	47-63Hz			85VAC		277VAC
	DC operation; refer to **„Connections for DC-operation“**			88VDC		370VDC
Turn-on Voltage	AC operation			70VAC		
	DC operation			85VDC		
Turn-off Voltage	AC operation			60VAC		
	DC operation			65VDC		
Input Current	AC operation	RACPRO1-S120/12	120VAC		2.2A	
			240VAC		1.1A	
		RACPRO1-S120/24 RACPRO1-S120/48	120VAC		2.2A	
			240VAC		1.2A	
	DC operation	RACPRO1-S120/12	110VDC		1.1A	
			240VDC		0.4A	
		RACPRO1-S120/24 RACPRO1-S120/48	110VDC		1.2A	
			240VDC		0.5A	
Inrush Current	cold start		120VAC			9A
			240VAC			19A
No Load Power Consumption	120VAC				200mW	
	230VAC				300mW	
Input Frequency Range				47Hz		63Hz
Nominal Output Voltage (factory set)	RACPRO1-S120/12				12VDC	
	RACPRO1-S120/24				24VDC	
	RACPRO1-S120/48				48VDC	
Minimum Load				0%		
Power Factor	full load				0.6	
Start-up time					190ms	300ms
Rise time					70ms	100ms
Hold-up time	120VAC			12ms	15ms	
	230VAC			58ms	73ms	
Internal Operating Frequency					70kHz	
Ripple and Noise	20MHz bandwidth					100mVp-p

Note3: The products were submitted for safety files at AC and DC-Input operation. (120-240VAC ±10% and 120-240VDC -15/+20%)
Output power derating for Line-input of less than:
12Vout: 108Vac/102Vdc (derate linearly from 100% at 108Vac to 88% at 85Vac / 100% at 102Vdc to 83% at 88Vdc)
24/48Vout: 108Vac/102Vdc (derate linearly from 100% at 108Vac to 77% at 85Vac / 100% at 102Vdc to 80% at 80Vdc)

U/I Characteristic

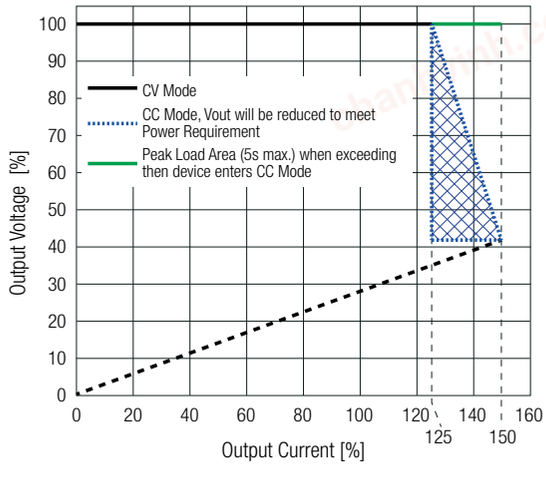

copyright © RECOM Power GmbH, all rights reserved
www.recom-power.com

chanhvinh.com

Technical Data Sheet

RACPRO1-S120 Series ◊ 1AC DIN-Rail Power Supply

120W ◊ Input: 85-277VAC / 88-370VDC

RECOM AC/DC Converter

BASIC CHARACTERISTICS (measured @ T_{AMB}= 25°C, 230VAC full load and after warm-up unless otherwise stated)

Connections for DC-operation

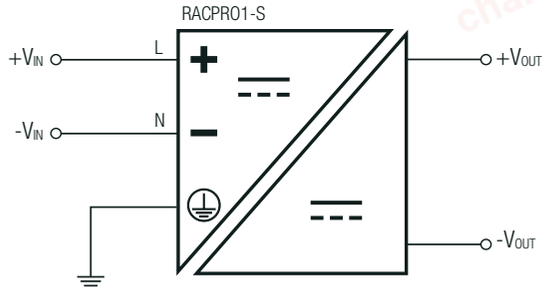

RACPRO1-S120/24

Efficiency vs. Load

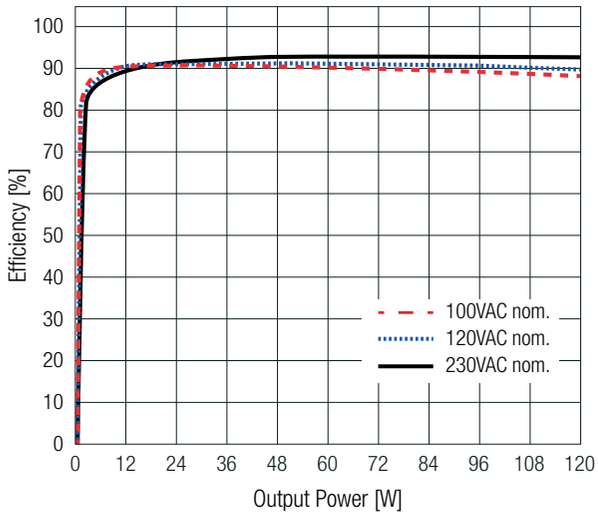

Power Dissipation vs. Load

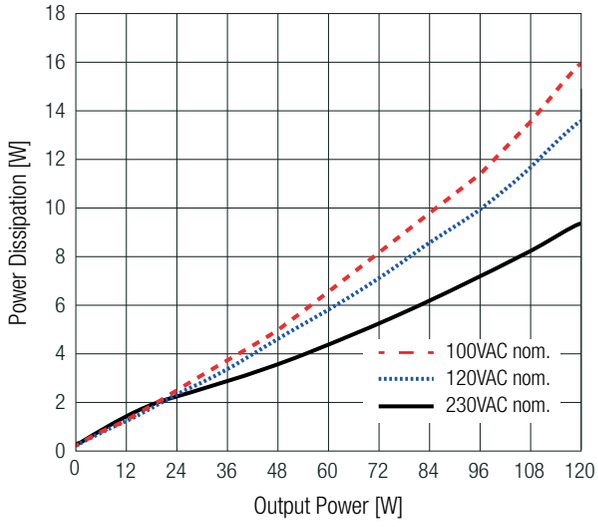

ADDITIONAL FEATURES

Parameter	Condition		Value
Output Voltage Adjustability (4)	potentiometer	RACPRO1-S120/12	12-15VDC
		RACPRO1-S120/24	24-29VDC
		RACPRO1-S120/48	48-56VDC
Boost Power	refer to **„Boost Power“**		150% for 5s
DC-OK LED	LED green		output voltage ok, normal mode
	LED off		abnormal mode, no operation or failure
Signal Contact	closed		normal mode
	open		abnormal mode, no operation or failure
Signal Contact Rating	do not connect signaling contact to hazardous voltages	RACPRO1-S120/12; RACPRO1-S120/24	30VDC/0.1A
		RACPRO1-S120/48	60VDC/0.1A

Note4: Make sure that the maximum rated output power will not be exceeded when trimming up.

REGULATIONS (measured @ T_{AMB}= 25°C, 230VAC full load and after warm-up unless otherwise stated)

Parameter	Condition	Value
Output Accuracy		±1.0% max.
Line Regulation	low line to high line, full load	±0.1% max.
Load Regulation	0% to 100% load	±0.5% max.
Max. Capacitive Load (start-up)	RACPRO1-S120/12	16mF
	RACPRO1-S120/24	10mF
	RACPRO1-S120/48	5mF
Transient Response	10-100% load	±2.0% typ.
	recovery time	10ms typ.

copyright © RECOM Power GmbH, all rights reserved

chanhvinh.com

Technical Data Sheet

RACPRO1-S120 Series ◊ 1AC DIN-Rail Power Supply

120W ◊ Input: 85-277VAC / 88-370VDC

RECOM AC/DC Converter

PROTECTIONS (measured @ T_{AMB}= 25°C, 230VAC full load and after warm-up unless otherwise stated)

Parameter	Type		Value
Internal Input Fuse			T3.15A, slow-blow
External Input Protection			16A max. C-characteristic circuit breaker or faster
Short Circuit Protection (SCP)			hiccup mode, auto recovery
Over Voltage Protection (OVP)	SELV output	RACPRO1-S120/12	19VDC, hiccup mode
		RACPRO1-S120/24	35VDC, hiccup mode
		RACPRO1-S120/48	59.8VDC, hiccup mode
Return Voltage Immunity	continuous	RACPRO1-S120/12	20VDC max.
		RACPRO1-S120/24	35VDC max.
		RACPRO1-S120/48	63VDC max.
	<5 min	RACPRO1-S120/12	25VDC max.
		RACPRO1-S120/24	38VDC max.
		RACPRO1-S120/48	63VDC max.
Absorbing Energy	RACPRO1-S120/12		0.75J
	RACPRO1-S120/24		0.58J
	RACPRO1-S120/48		0.40J
Over Voltage Category (OVC)			OVC II (5000m)
			OVC III (2000m)
Over Current Protection (OCP)	<5 sec		>150% of rated load current, hiccup mode, auto recovery
Class of Equipment			Class I with PE connection
Isolation Voltage (safety certified) [5]	tested for 1 minute	I/P to O/P	3kVAC / 4kVDC
		I/P to PE	1.6kVAC / 2.5kVDC
		O/P to PE	500VAC / 700VDC
Isolation Resistance	I/P to O/P		4.5MΩ min.
Insulation Grade			reinforced
Earth Leakage Current	240VAC/60Hz		1mA max.

Note5: For repeat Hi-Pot testing, reduce the time and/or the test voltage

ENVIRONMENTAL (measured @ T_{AMB}= 25°C, 230VAC full load and after warm-up unless otherwise stated)

Parameter	Condition		Value
Operating Ambient Temperature Range	@ natural convection (0.1m/s)	with derating	-40°C to +70°C
		without derating	refer to **„Derating Graph“**
Operating Altitude [6]	refer to **„Altitude Derating“**		5000m
Operating Humidity	non-condensing		95% RH max.
Pollution Degree			PD2
IP Rating			IP20
Shock	according to IEC 60068-2-27 Fa	non-operating	15G/11ms, 3 times (positive/negative) in all axis
Vibration	according to IEC 60068-2-6 Fc	non-operating	5 - 8.4Hz @ 3.5mm deflection 8.4 -150Hz @ 2G, 10 cycles /axis(min-max-min); 1 octave/min
MTBF	according to EN/IEC 61709 (SN29500); T_{AMB}= 40°C		1590 x 10^3 hours
Lifetime Expectancy [7]	230VAC		refer to below table

Note6: Recognized by safety agency for safe operation up to 5000m. High altitude operation may impact the performance and lifetime.

Lifetime Expectancy at 230Vac

RACPRO1-S120/24

Ambient Temperature	50% Load	75% Load	100% Load
+20°C	1044 x 10^3 hrs.	923 x 10^3 hrs.	392 x 10^3 hrs.
+30°C	522 x 10^3 hrs.	462 x 10^3 hrs.	196 x 10^3 hrs.
+40°C	261 x 10^3 hrs.	231 x 10^3 hrs.	98 x 10^3 hrs.

Note7: The stated lifetime expectancy of more than 15 years is provided for comparison purposes only and does not imply continuous 24/7 operation.

copyright © RECOM Power GmbH, all rights reserved

chanhvinh.com

Technical Data Sheet

RACPRO1-S120 Series ◊ 1AC DIN-Rail Power Supply

120W ◊ Input: 85-277VAC / 88-370VDC

RECOM AC/DC Converter

ENVIRONMENTAL (measured @ T_{AMB}= 25°C, 230VAC full load and after warm-up unless otherwise stated)

Derating Graph

(@ Chamber and natural convection 0.1m/s, standard mounting orientation)

RACPRO1-S120/12

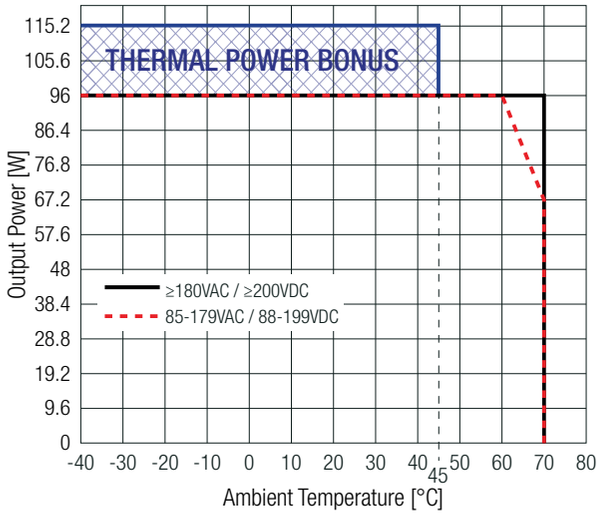

RACPRO1-S120/24, RACPRO1-S120/48

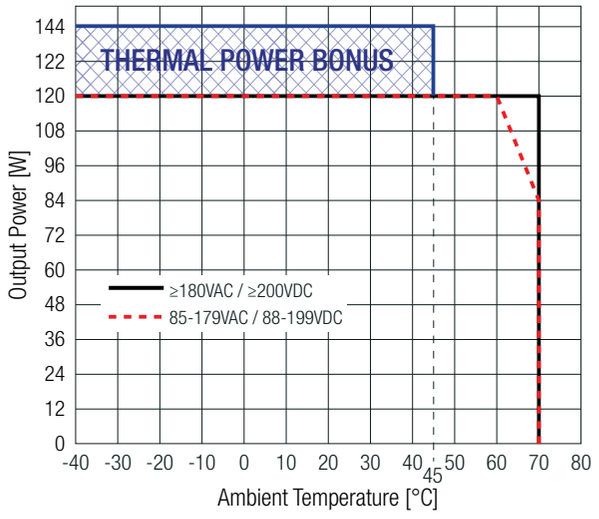

Note8: Thermal power bonus only applies at an input voltage ≥108VAC and ≥150VDC

Boost Power

(-40°C to +60°C max.)

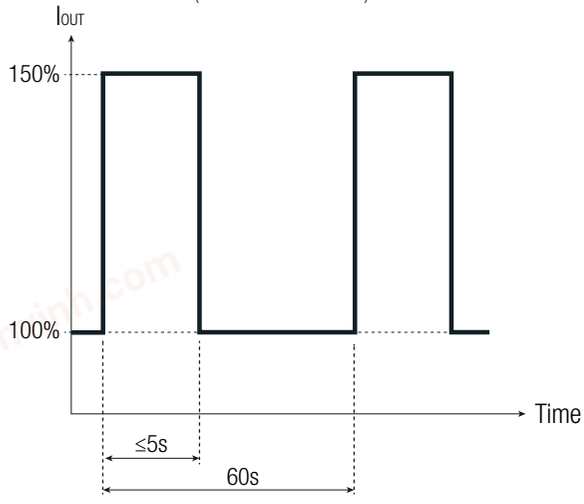

Altitude Derating

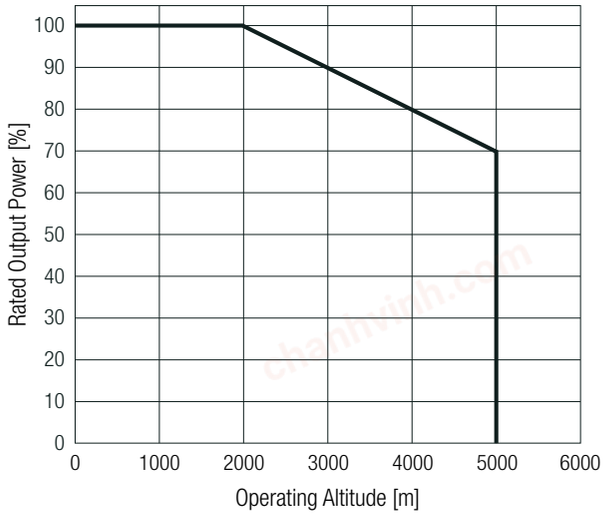

SAFETY & CERTIFICATIONS

Certificate Type (Safety)	Report Number	Standard
Electrical Equipment For Measurement, Control, and Laboratory Use; Part 1: General Requirements (CB)	25TH0250_ 61010-1_0	IEC61010-1:2010+A1:2016 3rd Edition
Electrical Equipment For Measurement, Control, and Laboratory Use; Part 1: General Requirements		EN61010-1:2010+A1:2019
Electrical Equipment For Measurement, Control, and Laboratory Use; Part 1: General Requirements	E550315	UL61010-1:2012 3rd Edition CAN/CSA-C22.2 No. 61010-1-12 3rd Edition
Electrical Equipment For Measurement, Control, and Laboratory Use; Part 2-201: Particular requirements for control equipment (CB)	25TH0250_ 61010-1_0	IEC61010-2-201:2017 2nd Edition EN IEC 61010-2-201:2018
Electrical Equipment For Measurement, Control, and Laboratory Use; Part 2-201: Particular requirements for control equipment	E550315	UL61010-2-201:2018 2nd Edition CAN/CSA-C22.2 No. 61010-2-201:2018-02-01
RoHS2		RoHS 2011/65/EU + AM2015/863

copyright © RECOM Power GmbH, all rights reserved

chanhvinh.com

Technical Data Sheet

RACPRO1-S120 Series ◊ 1AC DIN-Rail Power Supply

120W ◊ Input: 85-277VAC / 88-370VDC

RECOM AC/DC Converter

SAFETY & CERTIFICATIONS

EMC Compliance	Condition		Standard / Criterion
Electromagnetic compatibility (EMC) - Part 6-2: Generic standards - Immunity standard for industrial environments			IEC/EN61000-6-2:2019
Electromagnetic compatibility (EMC) - Part 6-3: Generic standards - Emission standard for residential area			IEC/EN 61000-6-3:2021
ESD Electrostatic discharge immunity test	Air: ±8kV; Contact: ±6kV		IEC61000-4-2:2008, Criteria A EN61000-4-2:2009, Criteria A
Radiated, radio-frequency, electromagnetic field immunity test	10V/m (80-1000MHz)		IEC/EN61000-4-3:2006+A2:2010, Criteria A
Fast Transient and Burst Immunity	AC Power Port: ±4kV DC-Output Port: ±2kV		IEC/EN61000-4-4:2012, Criteria A
Surge Immunity	AC-Power Port:	L-N: ±2kV L-PE, N-PE,: ±4kV	IEC/EN61000-4-5:2014+A1:2017, Criteria A
	DC-Output Port:	Vout(+) - Vout(-): ±1kV Vout(+)-PE, Vout(-)-PE: ±1kV	
Immunity to conducted disturbances, induced by radio-frequency fields	10Vrms (0.15-80MHz)		IEC61000-4-6:2013, Criteria A EN61000-4-6:2014, Criteria A
Power Magnetic Field Immunity	30A/m, 50/60Hz		EN61000-4-8:2010, Criteria A
Voltage Dips	230VAC, 50Hz	100%, 5 cycle; 70%, 10 cycles; 40%, 25 cycles; 30%, 25 cycles	IEC61000-4-11:2004+A1:2017, Criteria B
Voltage Interruptions	230VAC, 50Hz	100%, 250 cycles	IEC61000-4-11:2004+A1:2017, Criteria B
Limits of Harmonic Current Emissions			EN IEC 61000-3-2:2019
Limits of Voltage Fluctuations & Flicker			EN61000-3-3:2013+A1:2017

BLOCK DIAGRAM

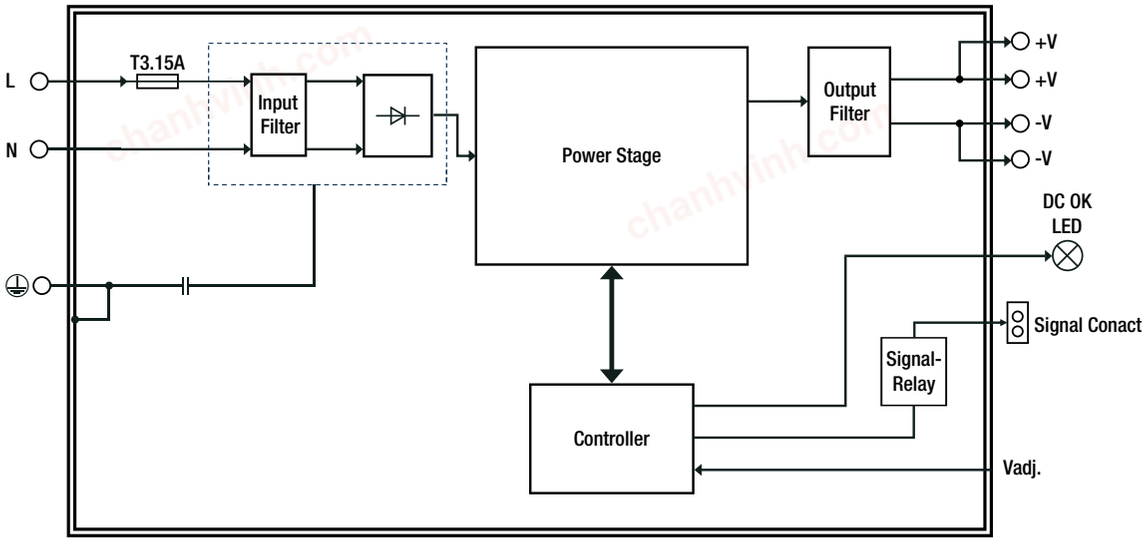

copyright © RECOM Power GmbH, all rights reserved
www.recom-power.com

chanhvinh.com

Technical Data Sheet

RACPRO1-S120 Series ◊ 1AC DIN-Rail Power Supply

120W ◊ Input: 85-277VAC / 88-370VDC

RECOM AC/DC Converter

DIMENSION & PHYSICAL CHARACTERISTICS

Parameter	Type	Value
Material	chassis	polycarbonate (UL94 V-0) / aluminum
Dimension (HxWxD)		100.0 x 28.0 x 112.0mm 3.9 x 1.1 x 4.4 inch
Weight		330 g 0.73 lbs

Dimension Drawing (mm)

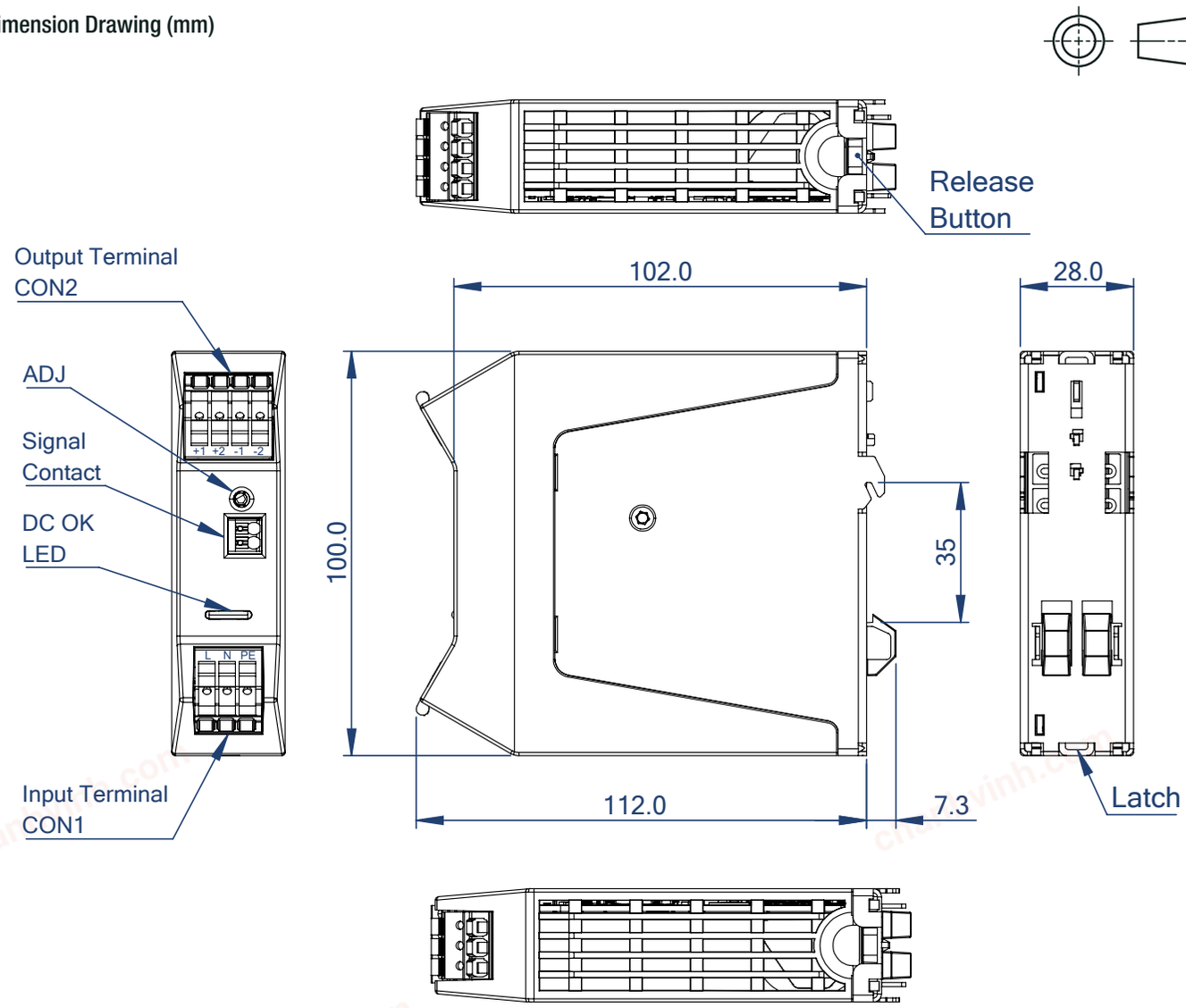

Input & Output Cage Clamp

Function	AWG	mm²
L, N	24-12	0.25-4
PE ⏚	24-12	0.25-4
+1, +2 (Vout)	24-12	0.25-4
-1, -2 (Vout)	24-12	0.25-4
Wire stripping length: 10-12mm		

Push-In Signal Terminal (10)

Function	AWG	mm²
Signal (13,14)	24-16	0.25-1.5
Wire stripping length: 8-9mm		

Note10: Do not connect signaling contact to hazardous voltages. Ferrules are required for flexible cable.

Note9: Use flexible (stranded wire) or solid cables with above wire cross-section is recommended. Use copper conductors designed for an operating temperature of at least 90°C.

Tolerance: ±0.5mm

copyright © RECOM Power GmbH, all rights reserved

chanhvinh.com

RACPRO1-S120 Series ◊ 1AC DIN-Rail Power Supply

120W ◊ Input: 85-277VAC / 88-370VDC

RECOM AC/DC Converter

INSTALLATION & APPLICATION

Mounting Instruction

Mounting Rail: Standard TS35 DIN Rail in accordance with EN 60715.

Mounting

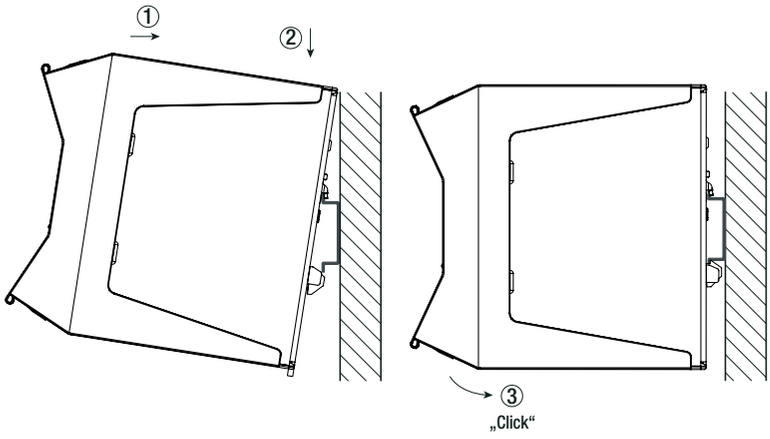

1. Place the device on the DIN rail with a slight upward tilt. Snap the device into the DIN rail.
2. Now tilt the device downwards until it reaches the lower part of the DIN rail.
3. Press the lower part of the device firmly against the rail until the device locks into position on the DIN rail.
4. To make sure it is securely locked in place, give the device a gentle shake.

Release Option 1 (tool-less)

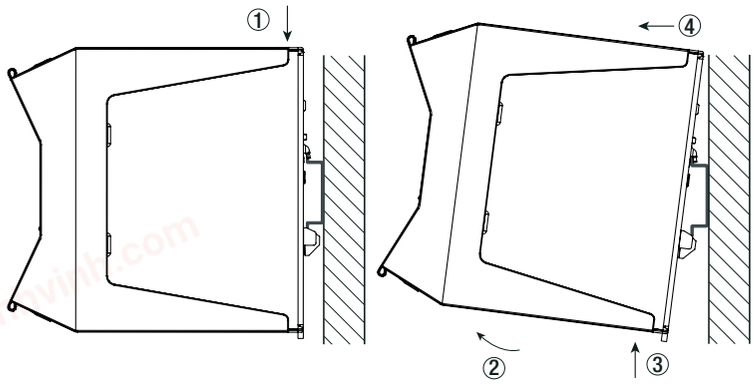

1. Press the unlock button on the top of the device to release the latch from the rail.
2. While pushing the button, slightly tilt the device forward.
3. Pull the device away from the DIN rail by pushing it up
4. Remove the power supply completely from the rail.

Release Option 2 (by using a screwdriver)

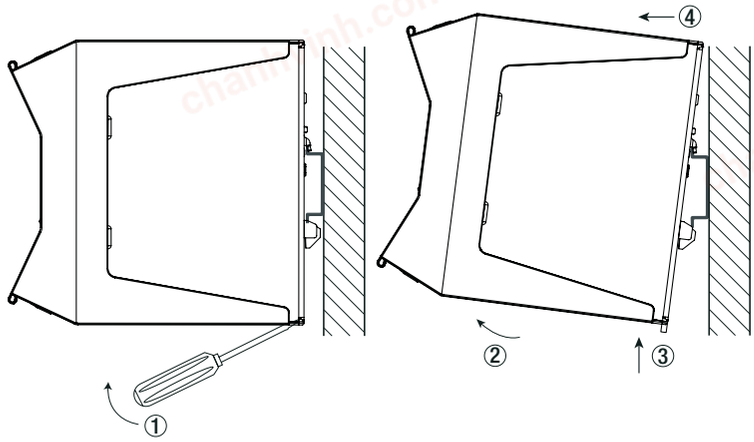

1. Pull the DIN rail latch by using a screwdriver OUT of the device and HOLD it.
2. Tilt the bottom of the device OUT.
3. Pull the device away from the DIN rail by pushing it up.
4. Remove the power supply completely from the rail.

copyright © RECOM Power GmbH, all rights reserved

chanhvinh.com

RACPRO1-S120 Series ◊ 1AC DIN-Rail Power Supply

120W ◊ Input: 85-277VAC / 88-370VDC

RECOM AC/DC Converter

INSTALLATION & APPLICATION

Installation Instructions

To guarantee sufficient convection cooling, keep a distance of 40mm above and 20mm below the device.

For vertical mounting the device should be installed with the input terminal on the bottom (standard orientation).

For all other mounting orientations, the maximum output power must be reduced by 15% of the nominal power.

No space between supplies is required.

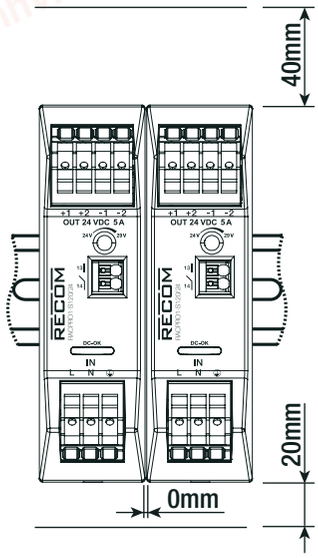

Parallel operation for redundancy 1+1

1) Adjust each power supply to the exact same output voltage with same load and cooling conditions.
2) Use the same wire length and cable cross-section for each power supply (star connection) and energize all units at the same time to avoid triggering overload protection.
3) It must be ensured that one of the power supply is able to provide the total required output power of the DC load to be supplied.
4) In normal operation, each of the two power supplies will be utilized by up to 50%.
5) **ATTENTION:** To prevent high reverse currents in the event of a secondary output fault, it is recommended to install a protective circuit at the output of each device when more than two power supplies are connected in parallel (e.g. decoupling diode or DC fuse). Leakage current, EMI, inrush current, harmonics will increase when using multiple power supplies.

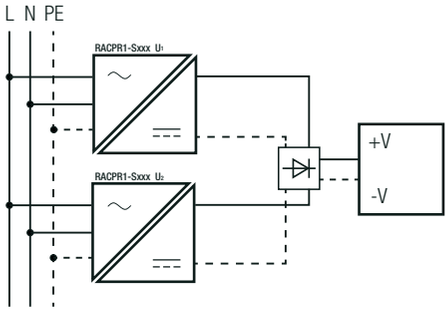

Please Note: This basic redundancy configuration does not protect against internal short circuits on the secondary side. In such cases, the faulty unit may draw current from the remaining supplies, resulting in loss of output regulation. To prevent this, use redundancy modules with integrated decoupling elements. RECOM offers the RACPRO1-RD40 redundancy module as a suitable solution for this purpose:

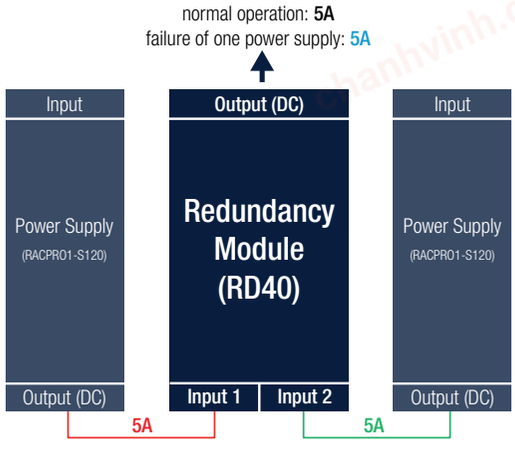

copyright © RECOM Power GmbH, all rights reserved

chanhvinh.com

Technical Data Sheet

RACPRO1-S120 Series ◊ 1AC DIN-Rail Power Supply

120W ◊ Input: 85-277VAC / 88-370VDC

RECOM AC/DC Converter

INSTALLATION & APPLICATION

Parallel operation for increasing output power 1+n

1) Adjust each power supply to the exact same output voltage with same load and cooling conditions.
2) Use the same wire length and cable cross-section for each power supply (star connection) and energize all units at the same time to avoid triggering overload protection.
3) A 10% safety margin may be recommended because the power distribution may be slightly asymmetrical depending on the cabeling.
4) **ATTENTION:** To prevent high reverse currents in the event of a secondary output fault, it is recommended to install a protective circuit at the output of each device when more than two power supplies are connected in parallel (e.g. decoupling diode or DC fuse). Leakage current, EMI, inrush current, harmonics will increase when using multiple power supplies.

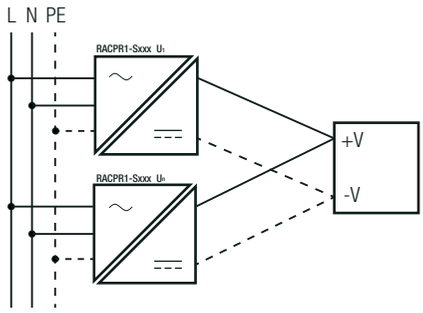

Series Operation

1) Only use PSU with the same type and performance class with identical parameters.
2) To increase the DC output voltage, connect 2 or more power supply units in series.
3) Therefore, negative output terminal "-1" of the first power supply unit must be connected to the positive output terminal "+1" of the second power supply unit and routed to the load. Depending on the common output-side earth reference point of the power supply unit, see below table/figures as example.
4) **ATTENTION**: Leakage current, EMI, inrush current, harmonics will increase when using multiple power supplies.

Example with 2 PSU´s in series:	Figure 1	Figure 2	Figure 3
RACPRO1-S120/24	+48Vdc	-48Vdc	±24Vdc
RACPRO1-S120/48	+96Vdc	-96Vdc	±48Vdc

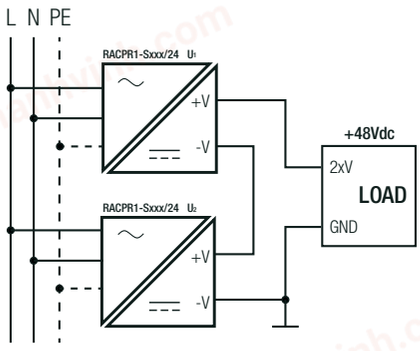

Figure 1

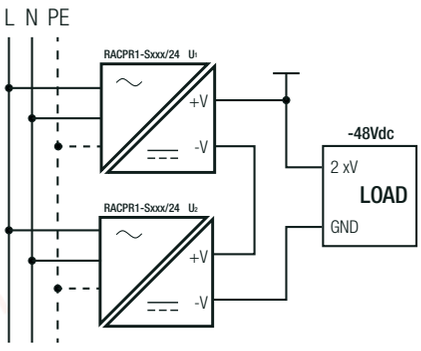

Figure 2

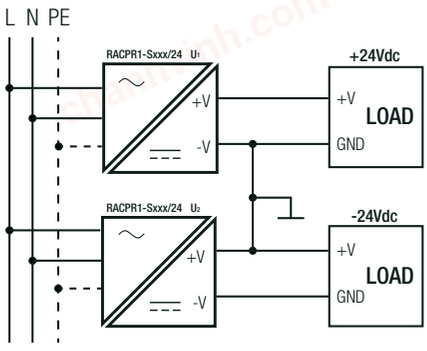

Figure 3

PACKAGING INFORMATION

Parameter	Type	Value
Packaging Dimension (LxWxH)	cardboard box	112.0 x 126.0 x 53.0mm
Packaging Quantity		1 pc
Storage Temperature Range		-40°C to +85°C
Storage Humidity	non-condensing	95% RH max.

The product information and specifications may be subject to changes even without prior written notice.The product has been designed for various applications; its suitability lies in the responsibility of each customer. The products are not authorized for use in safety-critical applications without RECOM's explicit written consent. A safety-critical application is an application where a failure may reasonably be expected to endanger or cause loss of life, inflict bodily harm or damage property. The applicant shall indemnify and hold harmless RECOM, its affiliated companies and its representatives against any damage claims in connection with the unauthorized use of RECOM products in such safety-critical applications.

copyright © RECOM Power GmbH, all rights reserved