chanhvinh.com

PulseLARSEN Antennas

TECHNICAL DATA SHEET

Description: 406-435 MHz 11 dBi 5-Element Yagi, Black, All-Welded, N-female connector

Series: Yagi

PART NUMBER: YA3406WN

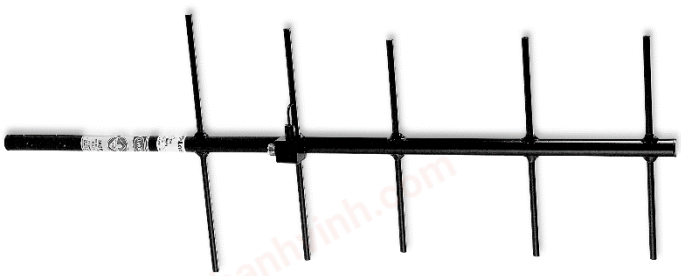

Features:

- 406-435 MHz
- Gain 11.5 dBi
- N connector
- 5 Elements
- All-Welded Aluminum
- Black Powder Coat
- Includes “U”-Bolt Bracket for maximum 3 in. diameter pole
- Wind loading 164 km/h = 100 MPH

Applications:

- Harsh Environmental Conditions
- Highly Directional
- Remote Monitoring / Scada
- Mining, Industrial
- Oil / Gas
- Utility and SmartGrid
- Wastewater, Irrigation
- Municipal / Transportation

All dimensions are in mm / inches

Issue: 1838

RoHS COMPLIANT

In the effort to improve our products, we reserve the right to make changes judged to be necessary.
CONFIDENTIAL AND PROPRIETARY INFORMATION
This document contains confidential and proprietary information of Pulse Electronics, Inc. (Pulse) and is protected by copyright, trade secret and other state and federal laws. Its receipt or possession does not convey any rights to reproduce, disclose its contents, or to manufacture, use or sell anything it may describe. Reproduction, disclosure or use without specific written authorization of Pulse is strictly forbidden.

For more information:

Pulse Worldwide Headquarters
15255 Innovation Drive #100
San Diego, CA 92128
USA
Tel:1-858-674-8100

Pulse/Larsen Antennas
18110 SE 34th St Bldg 2 Suite 250
Vancouver, WA 98683
USA
Tel: 1-360-944-7551

Europe Headquarters
Pulse GmbH & Do, KG
Zeppelinstrasse 15
Herrenberg, Germany
Tel: 49 7032 7806 0

Pulse (Suzhou) Wireless Products Co, Inc.
99 Huo Ju Road(#29 Bldg,4th Phase
Suzhou New District
Jiangsu Province, Suzhou 215009 PR China
Tel: 86 512 6807 9998

chanhvinh.com

PulseLARSEN Antennas

Series: Yagi

TECHNICAL DATA SHEET

Description: 406-435 MHz 11 dBi 5-Element Yagi, Black, All-Welded, N-female connector

PART NUMBER: YA3406WN

ELECTRICAL SPECIFICATIONS

Antenna Type	Yagi-Uda
Frequency	406-435 MHz
Nominal Impedance	50 Ω
VSWR	2:1 Max
Gain	11.5 dBi
Horizontal / Vertical -3 dB Bandwidth	57 ° / 44 °
Horizontal / Vertical Side Lobe Level	-8 dB / -15 dB
Front to Back Ratio	-10 dB min
Polarization	Linear
Power Withstanding	300 W

MECHANICAL SPECIFICATIONS

Overall Length	1073 mm
Weight	908 g
Antenna Color	Powder Coat Black
Antenna Material	Aluminum
Connector type	N Female
Fixing System	Pole Clamp
Azimuth Adjustment	360 °

In the effort to improve our products, we reserve the right to make changes judged to be necessary.
CONFIDENTIAL AND PROPRIETARY INFORMATION
This document contains confidential and proprietary information of Pulse Electronics, Inc. (Pulse) and is protected by copyright, trade secret and other state and federal laws. Its receipt or possession does not convey any rights to reproduce, disclose its contents, or to manufacture, use or sell anything it may describe. Reproduction, disclosure or use without specific written authorization of Pulse is strictly forbidden.

RoHS COMPLIANT

chanhvinh.com

PulseLARSEN Antennas

TECHNICAL DATA SHEET

Description: 406-435 MHz 11 dBi 5-Element Yagi, Black, All-Welded, N-female connector

Series: Yagi

PART NUMBER: YA3406WN

ENVIRONMENTAL SPECIFICATIONS

Operating Temperature	-40 to +85 ° C
Storage Temperature	-40 to +85 ° C
Cyclic	-40 to +55 ° C (5 ° C/min)
Wind-loading	164 km/h / 100 mi/h
Humidity	93% @ +30 ° C
Cyclic	95% @ +30 ° C
Rain	15 mm/min (30 min)
Salt Mist	7 Days
Industrial Atmosphere	4 Days
Sinusoidal Vibration Displacement	3 mm - 2/9 Hz
Sinusoidal Vibration Acceleration	10 m/s^2 - 9/200 Hz
Random Vibration Level (ASD)	1 m^2/s^2 - 10/200 Hz
	0.3 m^2/s^3 - 200/2000 Hz
Shocks	100 m/s^2
Drop Test	1.0 m
RoHS Compliant	Yes

In the effort to improve our products, we reserve the right to make changes judged to be necessary.
CONFIDENTIAL AND PROPRIETARY INFORMATION
This document contains confidential and proprietary information of Pulse Electronics, Inc. (Pulse) and is protected by copyright, trade secret and other state and federal laws. Its receipt or possession does not convey any rights to reproduce, disclose its contents, or to manufacture, use or sell anything it may describe. Reproduction, disclosure or use without specific written authorization of Pulse is strictly forbidden.

chanhvinh.com

PulseLARSEN Antennas

TECHNICAL DATA SHEET

Description: 406-435 MHz 11 dBi 5-Element Yagi, Black, All-Welded, N-female connector

Series: Yagi

PART NUMBER: YA3406WN

MECHANICAL DRAWING

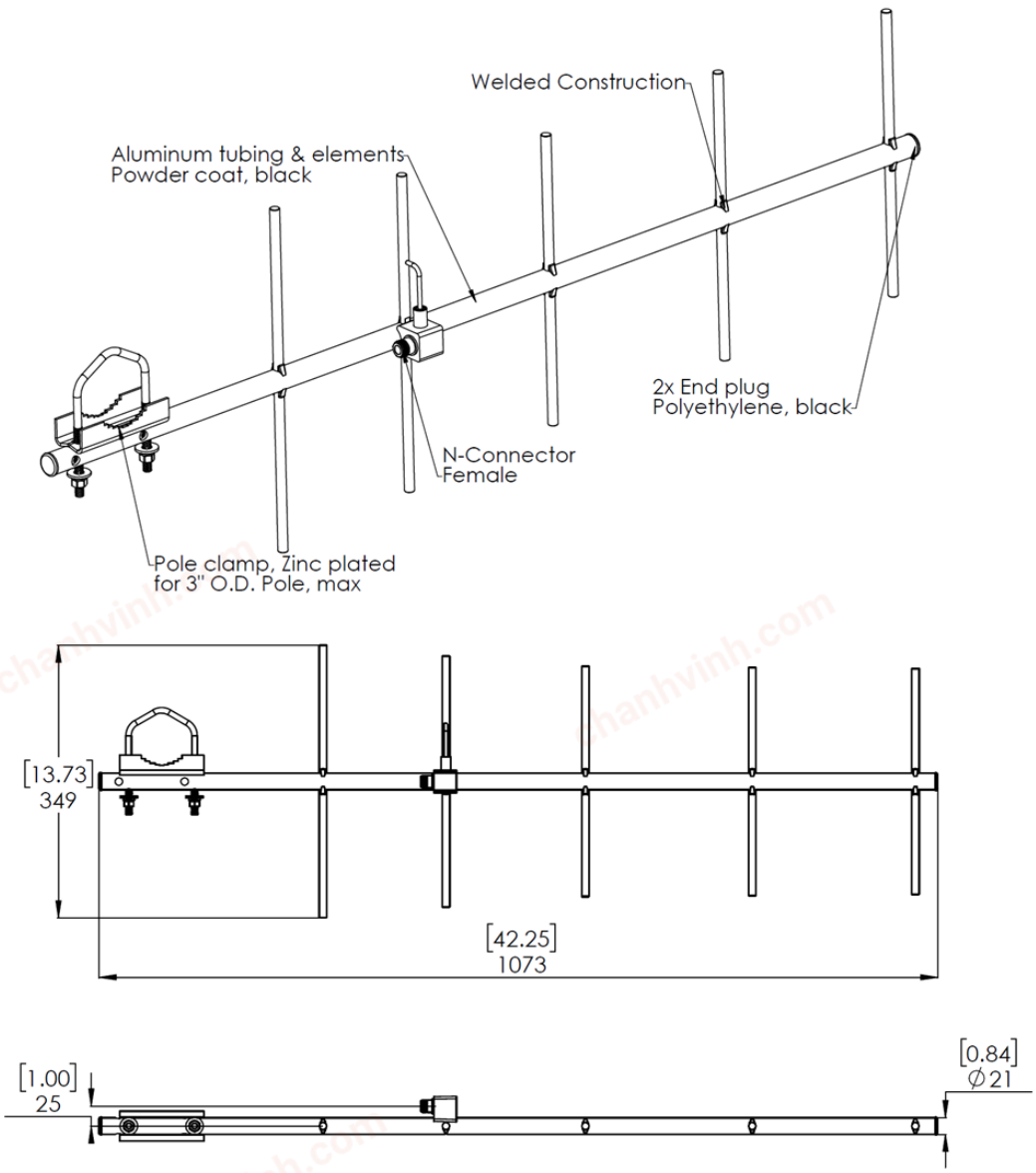

Unit: mm [in]

Issue: 1838

In the effort to improve our products, we reserve the right to make changes judged to be necessary.
CONFIDENTIAL AND PROPRIETARY INFORMATION
This document contains confidential and proprietary information of Pulse Electronics, Inc. (Pulse) and is protected by copyright, trade secret and other state and federal laws. Its receipt or possession does not convey any rights to reproduce, disclose its contents, or to manufacture, use or sell anything it may describe. Reproduction, disclosure or use without specific written authorization of Pulse is strictly forbidden.

RoHS COMPLIANT

chanhvinh.com

PulseLARSEN Antennas

TECHNICAL DATA SHEET

Description: 406-435 MHz 11 dBi 5-Element Yagi, Black, All-Welded, N-female connector

Series: Yagi

PART NUMBER: YA3406WN

TEST SETUP

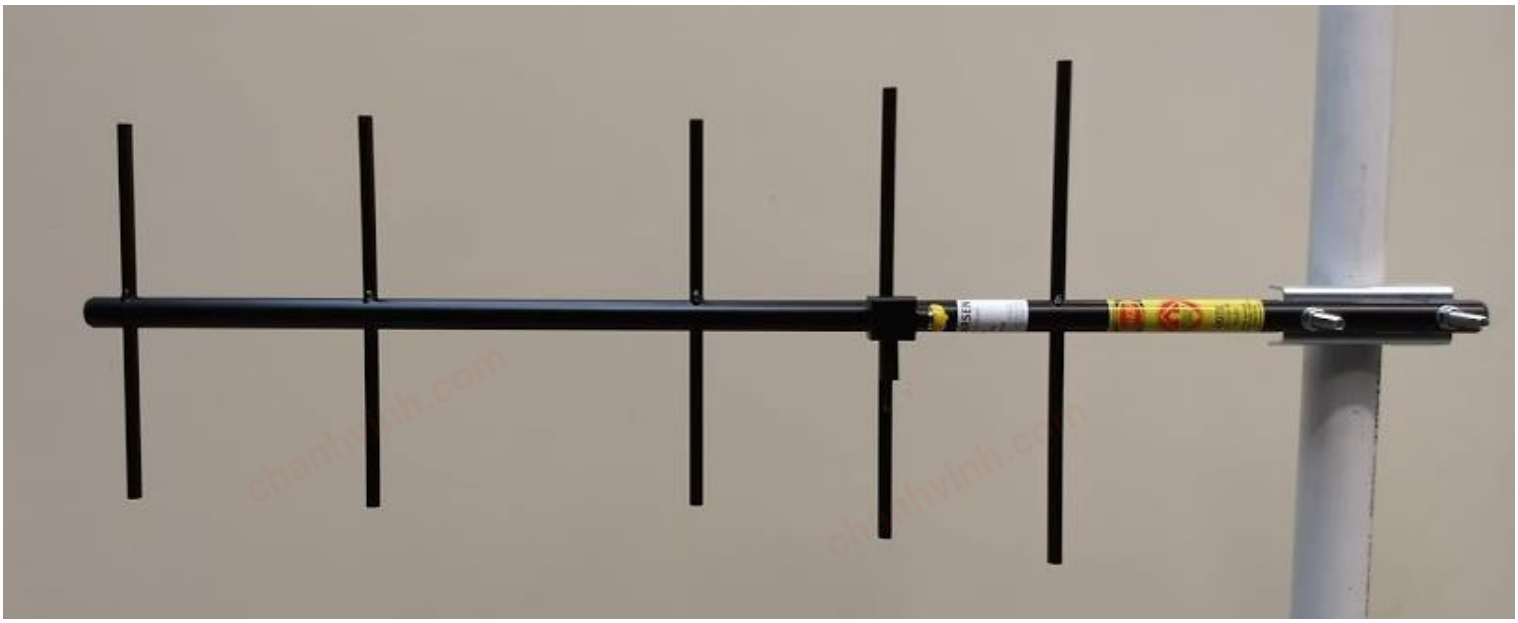

Antenna mounted vertically on post with gamma rod facing down

In the effort to improve our products, we reserve the right to make changes judged to be necessary.
CONFIDENTIAL AND PROPRIETARY INFORMATION
This document contains confidential and proprietary information of Pulse Electronics, Inc. (Pulse) and is protected by copyright, trade secret and other state and federal laws. Its receipt or possession does not convey any rights to reproduce, disclose its contents, or to manufacture, use or sell anything it may describe. Reproduction, disclosure or use without specific written authorization of Pulse is strictly forbidden.

RoHS COMPLIANT

chanhvinh.com

PulseLARSEN Antennas

TECHNICAL DATA SHEET

Description: 406-435 MHz 11 dBi 5-Element Yagi, Black, All-Welded, N-female connector

Series: Yagi

PART NUMBER: YA3406WN

CHARTS

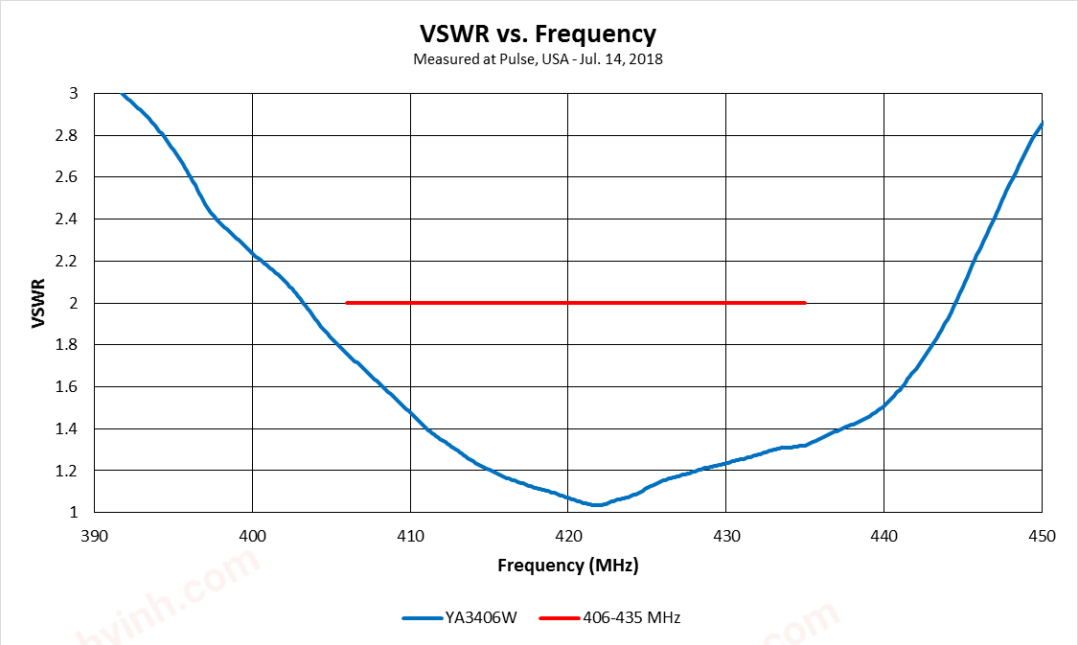

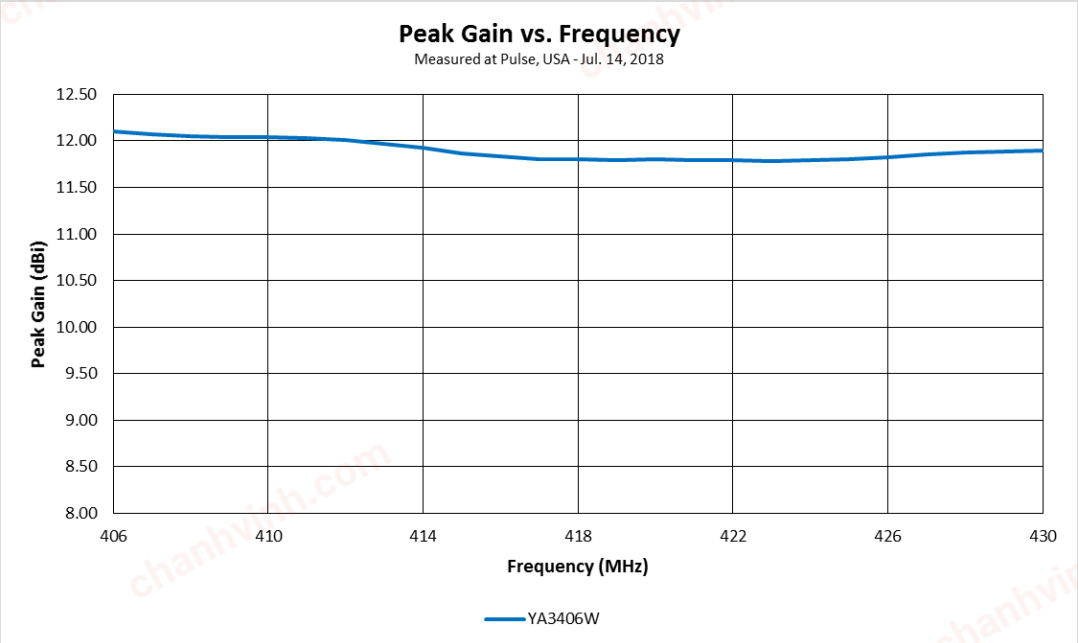

In the effort to improve our products, we reserve the right to make changes judged to be necessary.
CONFIDENTIAL AND PROPRIETARY INFORMATION
This document contains confidential and proprietary information of Pulse Electronics, Inc. (Pulse) and is protected by copyright, trade secret and other state and federal laws. Its receipt or possession does not convey any rights to reproduce, disclose its contents, or to manufacture, use or sell anything it may describe. Reproduction, disclosure or use without specific written authorization of Pulse is strictly forbidden.

RoHS COMPLIANT

chanhvinh.com

PulseLARSEN Antennas

TECHNICAL DATA SHEET

Description: 406-435 MHz 11 dBi 5-Element Yagi, Black, All-Welded, N-female connector

Series: Yagi

PART NUMBER: YA3406WN

CHARTS

Azimuth/Horizontal Plane

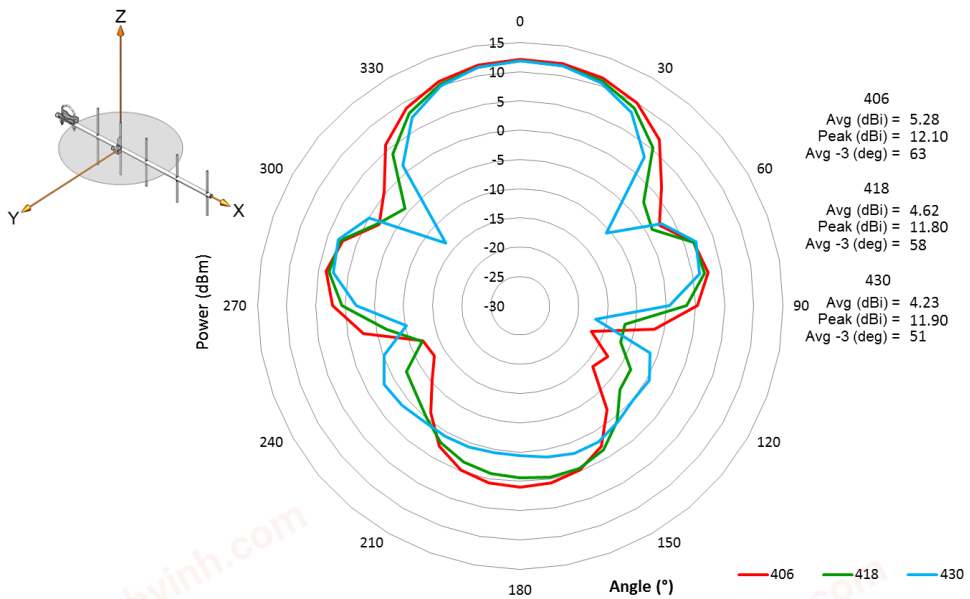

Elevation/Vertical Plane

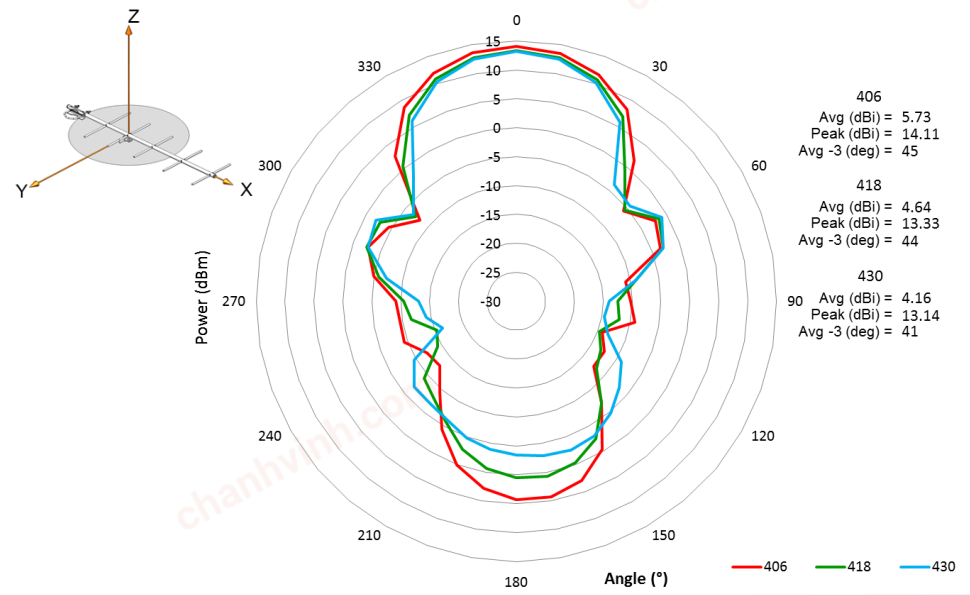

In the effort to improve our products, we reserve the right to make changes judged to be necessary.
CONFIDENTIAL AND PROPRIETARY INFORMATION
This document contains confidential and proprietary information of Pulse Electronics, Inc. (Pulse) and is protected by copyright, trade secret and other state and federal laws. Its receipt or possession does not convey any rights to reproduce, disclose its contents, or to manufacture, use or sell anything it may describe. Reproduction, disclosure or use without specific written authorization of Pulse is strictly forbidden.

RoHS COMPLIANT

chanhvinh.com

PulseLARSEN Antennas

TECHNICAL DATA SHEET

Description: 406-435 MHz 11 dBi 5-Element Yagi, Black, All-Welded, N-female connector

Series: Yagi

PART NUMBER: YA3406WN

PACKAGING

1 cardboard box containing:

- 1 antenna
- 1 cardboard partition
- 1 plastic bag containing:
  - 1 bracket kit
  - 1 instructions for antenna installation
  - 1 warning regarding electrocution hazards
- 1 bag of air

1 label on cardboard box with part number, date code, characteristics

ASSEMBLY

INSTALLATION INSTRUCTIONS

PRE-INSTALLATION

- Larsen Yagis are designed to mount vertically.
- YA3 Series (UHF): Gamma rod must be facing down for weather considerations (see Figure 1).

Figure 1

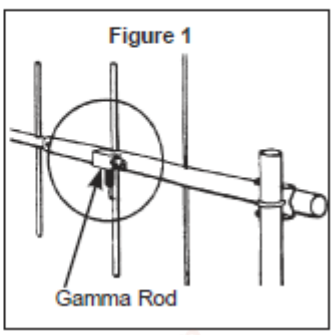

- YA5 and YA6 Series: The insulated side of the driven element should be facing up (see Figure 2).

Figure 2

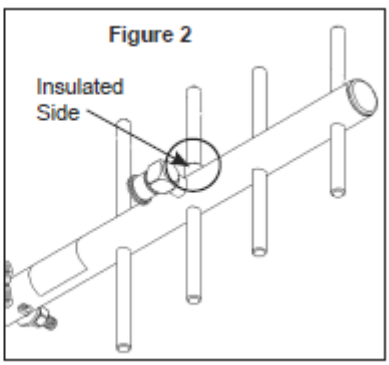

In the effort to improve our products, we reserve the right to make changes judged to be necessary.
CONFIDENTIAL AND PROPRIETARY INFORMATION
This document contains confidential and proprietary information of Pulse Electronics, Inc. (Pulse) and is protected by copyright, trade secret and other state and federal laws. Its receipt or possession does not convey any rights to reproduce, disclose its contents, or to manufacture, use or sell anything it may describe. Reproduction, disclosure or use without specific written authorization of Pulse is strictly forbidden.

RoHS COMPLIANT