chanhvinh.com

NFC Antenna
Small Planar NFC Antenna with Ferrite

W7013



The W7013 is a flexible Near Field Communication (NFC) antenna ideal for tight-space embedded products such as tablets, laptops, printers and other unique system using NFC technology. It is intended for pairing and sharing modes typically found in non-payment NFC applications.

The W7013 has a semi-flexible sintered ferrite backing designed to optimize magnetic fields, thus increasing the corresponding field strength of the antenna. The W7013 is a thin, flexible antenna which can be fed with customer-supplied interconnect cables by using direct-solder methods or with the use of Pulse's own interface connections. Mounting the antenna is easily accomplished using the thin but aggressive holding adhesive backing. Recommended for mounting on the inside of battery covers, directly onto PCB or metal surfaces, or locations where the antenna will be on or in close proximity to ground planes or displays.

Features
- Excellent performances on metal surfaces
- Thin, semi-flexible structure
- Easily assembles to device covers or mechanics
- Well-known antenna concept, reliable technology
- RoHS compliant product

Applications
- Mobile devices
- Reader / Writer devices
- Sharing / pairing

Electrical Specifications

Frequency [MHz]*	13.56
Reading Distance on Ground [mm]*	20 - 25 Grid Scan (avg)
Impedance [Ω]*	50 / 80
Self Resonance Frequency [MHz]**	71.5
Inductance [µH]**	1.05
Resistance [Ω]**	2.7
Q-Factor**	33
Matched Q Value***	5-25

Environmental Specifications

Operating Temperature [°C]	-40 to +85

Mechanical Specifications

Color	Black
Dimensions [in/mm]	1.18 x 0.98 x 0.01 (30 x 25 x 0.36)

NOTE: Electrical characteristics depend on distance from metal objects and the location of the antenna on the device. Measured in free space
* With matching network
** Bare coil without any matching network
*** With matching network (adjustable). Typical network picture refer to page 2.

chanhvinh.com

NFC Antenna
Small Planar NFC Antenna with Ferrite
W7013

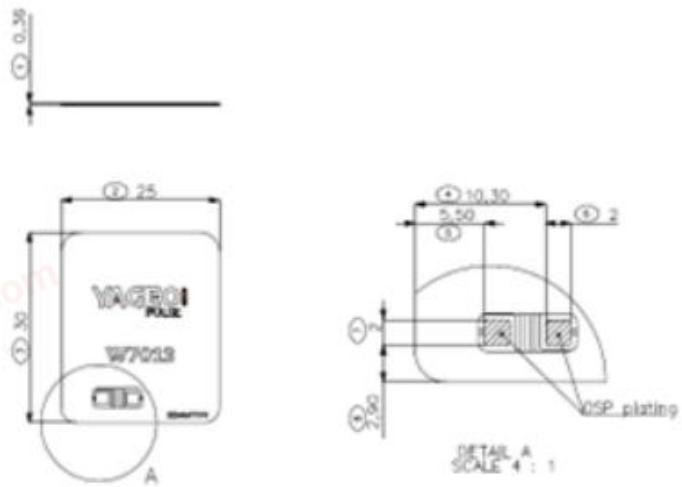

Recommended matching network		
Component	**Value**	**Note**
Lemc	560 nH	Filter resonance at 15.4 MHz
Cemc	180 pF	Filter resonance at 15.4 MHz
C1	36 pF	Antenna matching component, value depends on the antenna environment Antenna matching
C2	124 pF	Antenna matching component, value depends on the antenna environment Antenna matching
Rq	0 Ohm	Rq resistors used to lower Q-value if above 35

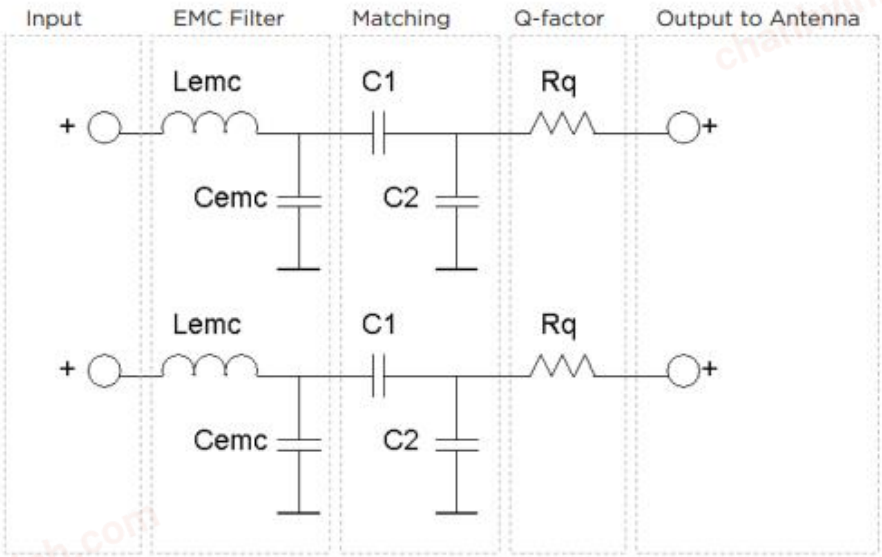

For More Information:
Americas - antennas.us@pulseelectronics.com | Europe – antennas.eu@pulseelectronics.com | Asia – antennas.as@pulseelectronics.com | Questions? +1-800-ANTENNA
Performance warranty of products offered on this data sheet is limited to the parameters specified. Data is subject to change without notice. Other brand and product names mentioned herein may be trademarks or registered trademarks of their respective owners. © Copyright , 2020. Pulse Electronics, Inc. All rights reserved.
Company address: Pulse Electronics, a YAGEO Company, 15255 Innovation Drive, Suite #100, San Diego, CA 92128.

'YAGEO Corporation and its affiliates do not recommend the use of commercial, automotive, and/or COTS grade products for high reliability applications or manned space flight.'