chanhvinh.com

PulseLARSEN Antennas

TECHNICAL DATA SHEET

Description: Outdoor IP67 Dual WiFi / DSCR, Standard SMA 90deg Swivel

Series: Stick Antenna

PART NUMBER: W5097



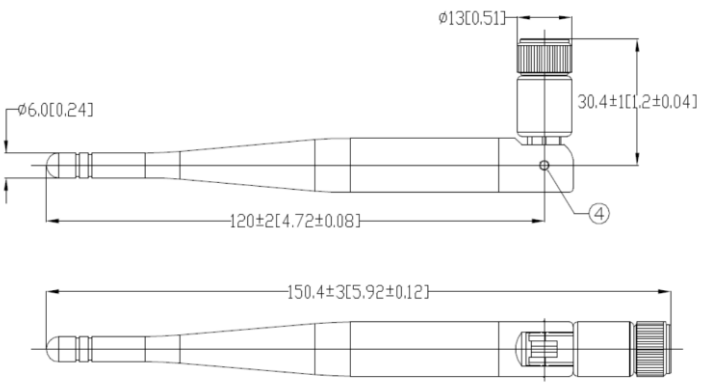

All dimensions are in mm / inches

Features:

- Dual band WiFi Stick antenna
- Omni directional for 360˚ horizontal plane coverage
- RoHS Compliant
- Covers 2.4 GHz and 5-6GHz
- DSRC 5.9GHz
- IP67
- SMA Male Swivel connector

Applications:

- WLAN devices using WiFi (802.11a/b/g), Bluetooth and ZigBee
- V2X DSRC communication
- In-building wireless access points (AP)
- Replacements for wireless routers
- Economical solution for OEMs with dual-band wireless devices.

RoHS COMPLIANT

Issue: 1619

In the effort to improve our products, we reserve the right to make changes judged to be necessary.
CONFIDENTIAL AND PROPRIETARY INFORMATION
This document contains confidential and proprietary information of Pulse Electronics, Inc. (Pulse) and is protected by copyright, trade secret and other state and federal laws. Its receipt or possession does not convey any rights to reproduce, disclose its contents, or to manufacture, use or sell anything it may describe. Reproduction, disclosure or use without specific written authorization of Pulse is strictly forbidden.

For more information:

Pulse Worldwide Headquarters
12220 World Trade Drive
San Diego, CA 92128
USA
Tel:1-858-674-8100

Pulse/Larsen Antennas
18110 SE 34th St Bldg 2 Suite 250
Vancouver, WA 98683
USA
Tel: 1-360-944-7551

Europe Headquarters
Pulse GmbH & Do, KG
Zeppelinstrasse 15
Herrenberg, Germany
Tel: 49 7032 7806 0

Pulse (Suzhou) Wireless Products Co, Inc.
99 Huo Ju Road(#29 Bldg,4th Phase
Suzhou New District
Jiangsu Province, Suzhou 215009 PR China
Tel: 86 512 6807 9998

chanhvinh.com

PulseLARSEN Antennas

TECHNICAL DATA SHEET

Description: Outdoor IP67 Dual WiFi / DSCR, Standard SMA 90deg Swivel

Series: Stick Antenna

PART NUMBER: W5097

ELECTRICAL SPECIFICATIONS

Frequency	2400-2500MHz & 5150-6000MHz
Nominal Impedance	50Ω
VSWR	2.0 Max
Peak Gain (2400-2500MHz)	2.2dBi
Peak Gain (5150-6000MHz)	3.5dBi
Average efficiency(2400-2500MHz)	65%
Average efficiency(5150-6000MHz)	70%
Polarization:	linear

In the effort to improve our products, we reserve the right to make changes judged to be necessary.
CONFIDENTIAL AND PROPRIETARY INFORMATION
This document contains confidential and proprietary information of Pulse Electronics, Inc. (Pulse) and is protected by copyright, trade secret and other state and federal laws. Its receipt or possession does not convey any rights to reproduce, disclose its contents, or to manufacture, use or sell anything it may describe. Reproduction, disclosure or use without specific written authorization of Pulse is strictly forbidden.

RoHS COMPLIANT

chanhvinh.com

PulseLARSEN Antennas

TECHNICAL DATA SHEET

Description: Outdoor IP67 Dual WiFi / DSCR, Standard SMA 90deg Swivel

Series: Stick Antenna

PART NUMBER: W5097

MECHANICAL SPECIFICATIONS

Antenna body	TPEE	
Color	black	
Ingress Protection	IP67	
Weight	17.2	g
Overall Length	3.92	INCHES
Connector type	SMA male	

ENVIRONMENTAL SPECIFICATIONS

Operating temperature	-40/+85	° C

In the effort to improve our products, we reserve the right to make changes judged to be necessary.
CONFIDENTIAL AND PROPRIETARY INFORMATION
This document contains confidential and proprietary information of Pulse Electronics, Inc. (Pulse) and is protected by copyright, trade secret and other state and federal laws. Its receipt or possession does not convey any rights to reproduce, disclose its contents, or to manufacture, use or sell anything it may describe. Reproduction, disclosure or use without specific written authorization of Pulse is strictly forbidden.

RoHS COMPLIANT

chanhvinh.com

PulseLARSEN Antennas

TECHNICAL DATA SHEET

Description: Outdoor IP67 Dual WiFi / DSCR, Standard SMA 90deg Swivel

Series: Stick Antenna

PART NUMBER: W5097

MECHANICAL DRAWING

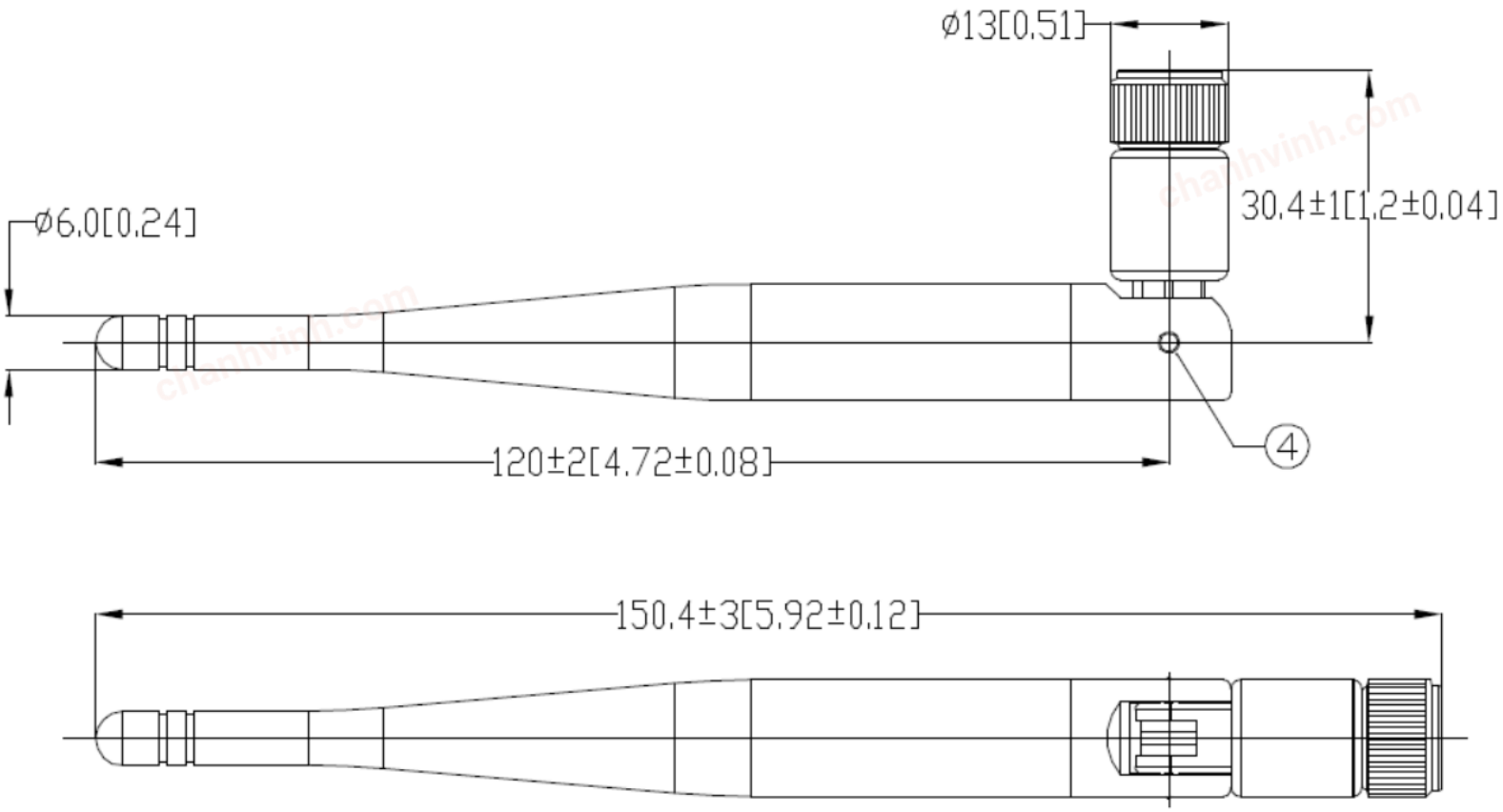

In the effort to improve our products, we reserve the right to make changes judged to be necessary.
CONFIDENTIAL AND PROPRIETARY INFORMATION
This document contains confidential and proprietary information of Pulse Electronics, Inc. (Pulse) and is protected by copyright, trade secret and other state and federal laws. Its receipt or possession does not convey any rights to reproduce, disclose its contents, or to manufacture, use or sell anything it may describe. Reproduction, disclosure or use without specific written authorization of Pulse is strictly forbidden.

RoHS COMPLIANT

chanhvinh.com

PulseLARSEN Antennas

TECHNICAL DATA SHEET

Description: Outdoor IP67 Dual WiFi / DSCR, Standard SMA 90deg Swivel

Series: Stick Antenna

PART NUMBER: W5097

CHARTS

VSWR measured in free space

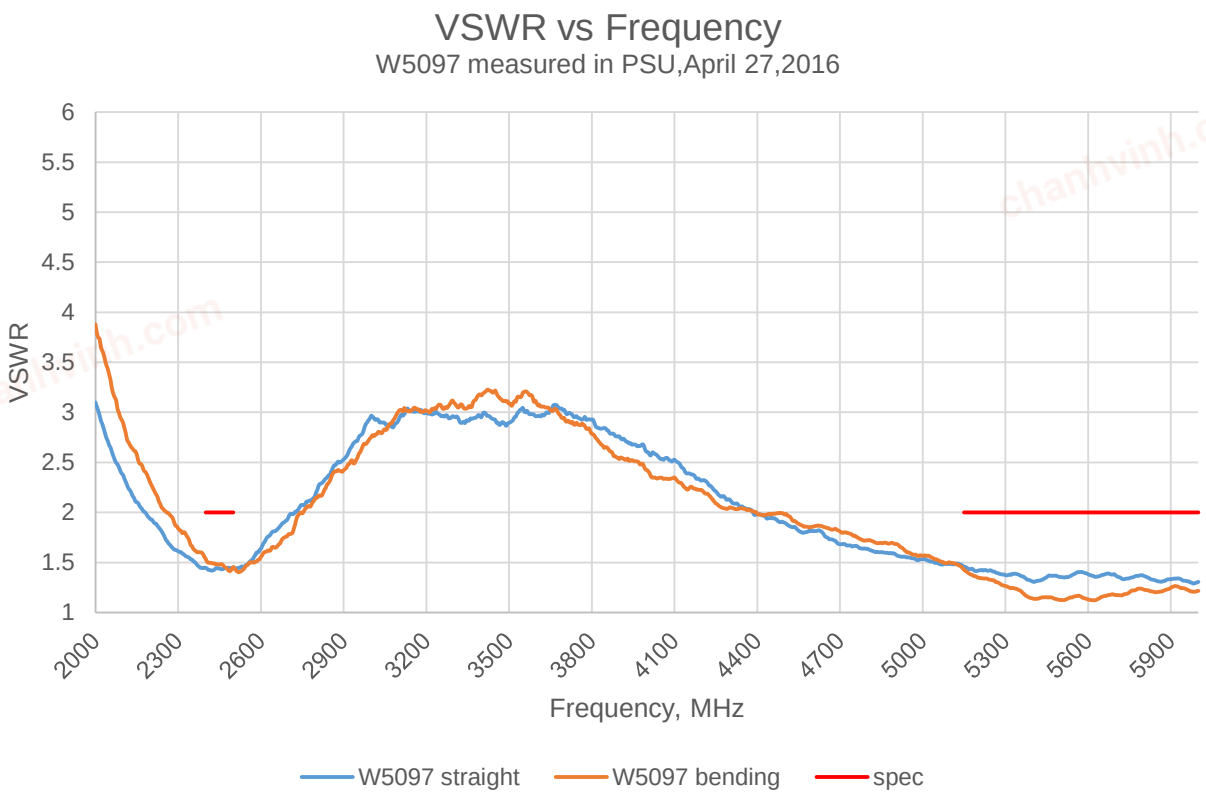

In the effort to improve our products, we reserve the right to make changes judged to be necessary.
CONFIDENTIAL AND PROPRIETARY INFORMATION
This document contains confidential and proprietary information of Pulse Electronics, Inc. (Pulse) and is protected by copyright, trade secret and other state and federal laws. Its receipt or possession does not convey any rights to reproduce, disclose its contents, or to manufacture, use or sell anything it may describe. Reproduction, disclosure or use without specific written authorization of Pulse is strictly forbidden.

RoHS COMPLIANT

chanhvinh.com

PulseLARSEN Antennas

TECHNICAL DATA SHEET

Description: Outdoor IP67 Dual WiFi / DSCR, Standard SMA 90deg Swivel

Series: Stick Antenna

PART NUMBER: W5097

CHARTS

Chamber set up

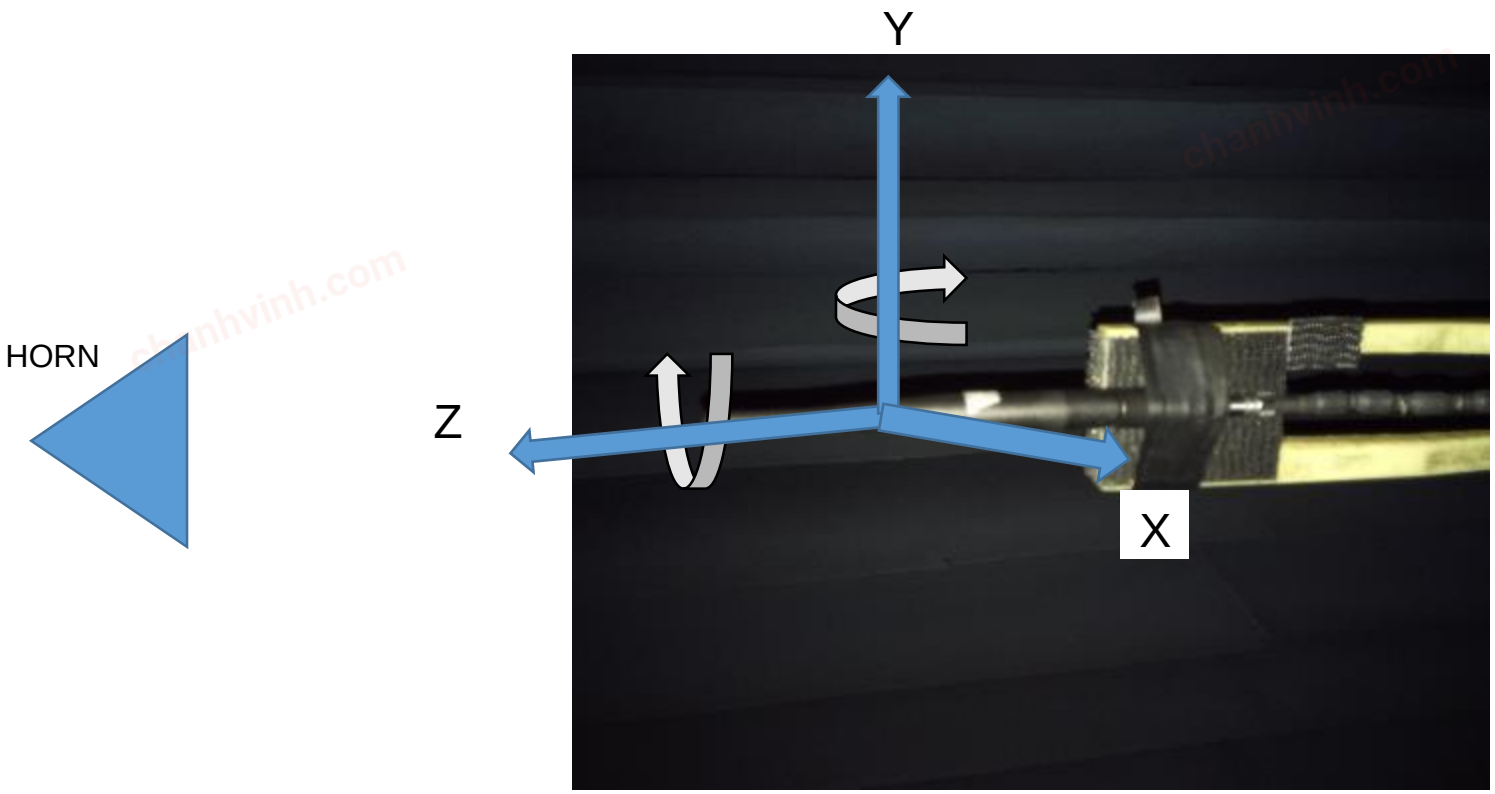

In the effort to improve our products, we reserve the right to make changes judged to be necessary.
CONFIDENTIAL AND PROPRIETARY INFORMATION
This document contains confidential and proprietary information of Pulse Electronics, Inc. (Pulse) and is protected by copyright, trade secret and other state and federal laws. Its receipt or possession does not convey any rights to reproduce, disclose its contents, or to manufacture, use or sell anything it may describe. Reproduction, disclosure or use without specific written authorization of Pulse is strictly forbidden.

chanhvinh.com

PulseLARSEN Antennas

TECHNICAL DATA SHEET

Description: Outdoor IP67 Dual WiFi / DSCR, Standard SMA 90deg Swivel

Series: Stick Antenna

PART NUMBER: W5097

CHARTS

Efficiency measured in free space

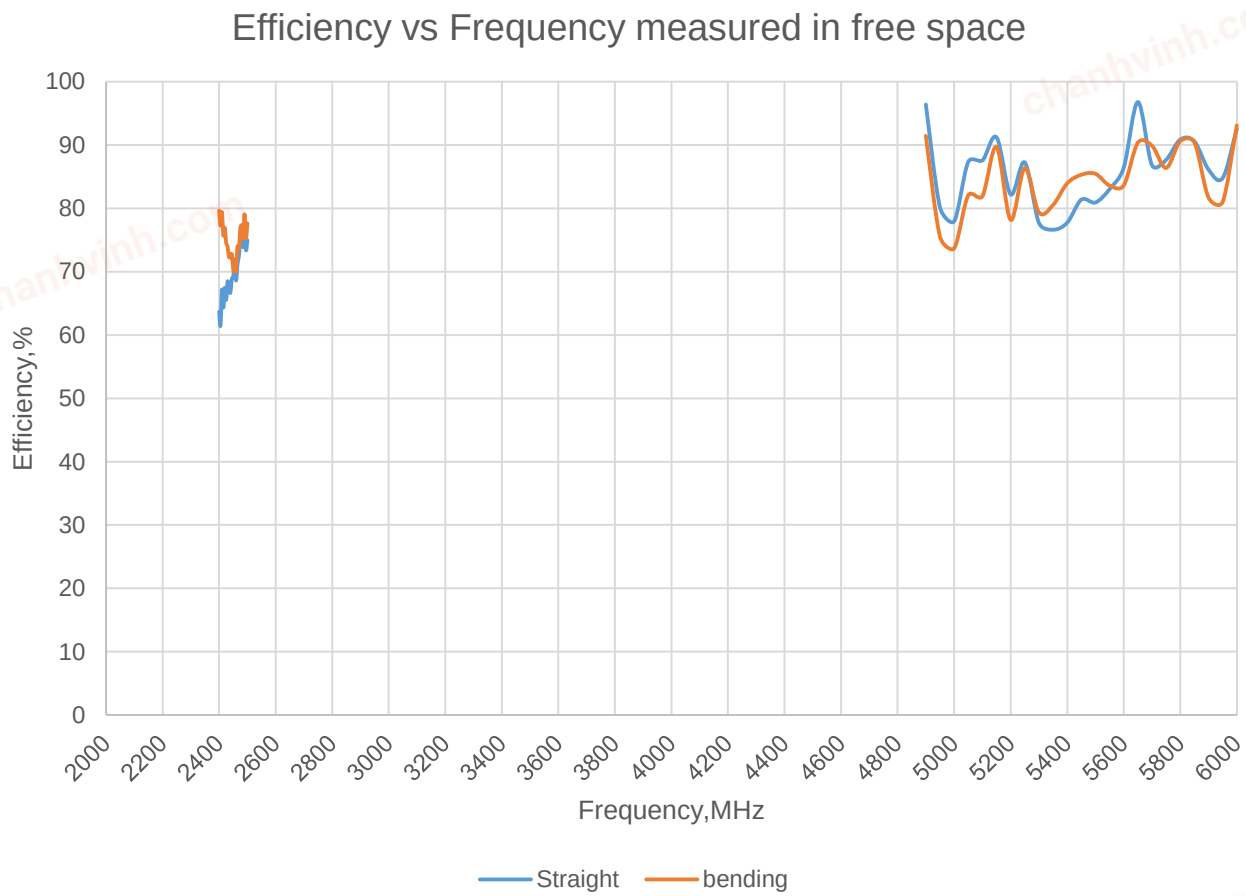

In the effort to improve our products, we reserve the right to make changes judged to be necessary.
CONFIDENTIAL AND PROPRIETARY INFORMATION
This document contains confidential and proprietary information of Pulse Electronics, Inc. (Pulse) and is protected by copyright, trade secret and other state and federal laws. Its receipt or possession does not convey any rights to reproduce, disclose its contents, or to manufacture, use or sell anything it may describe. Reproduction, disclosure or use without specific written authorization of Pulse is strictly forbidden.

RoHS COMPLIANT

chanhvinh.com

PulseLARSEN Antennas

TECHNICAL DATA SHEET

Description: Outdoor IP67 Dual WiFi / DSCR, Standard SMA 90deg Swivel

Series: Stick Antenna

PART NUMBER: W5097

CHARTS

Peak Gain measured in free space

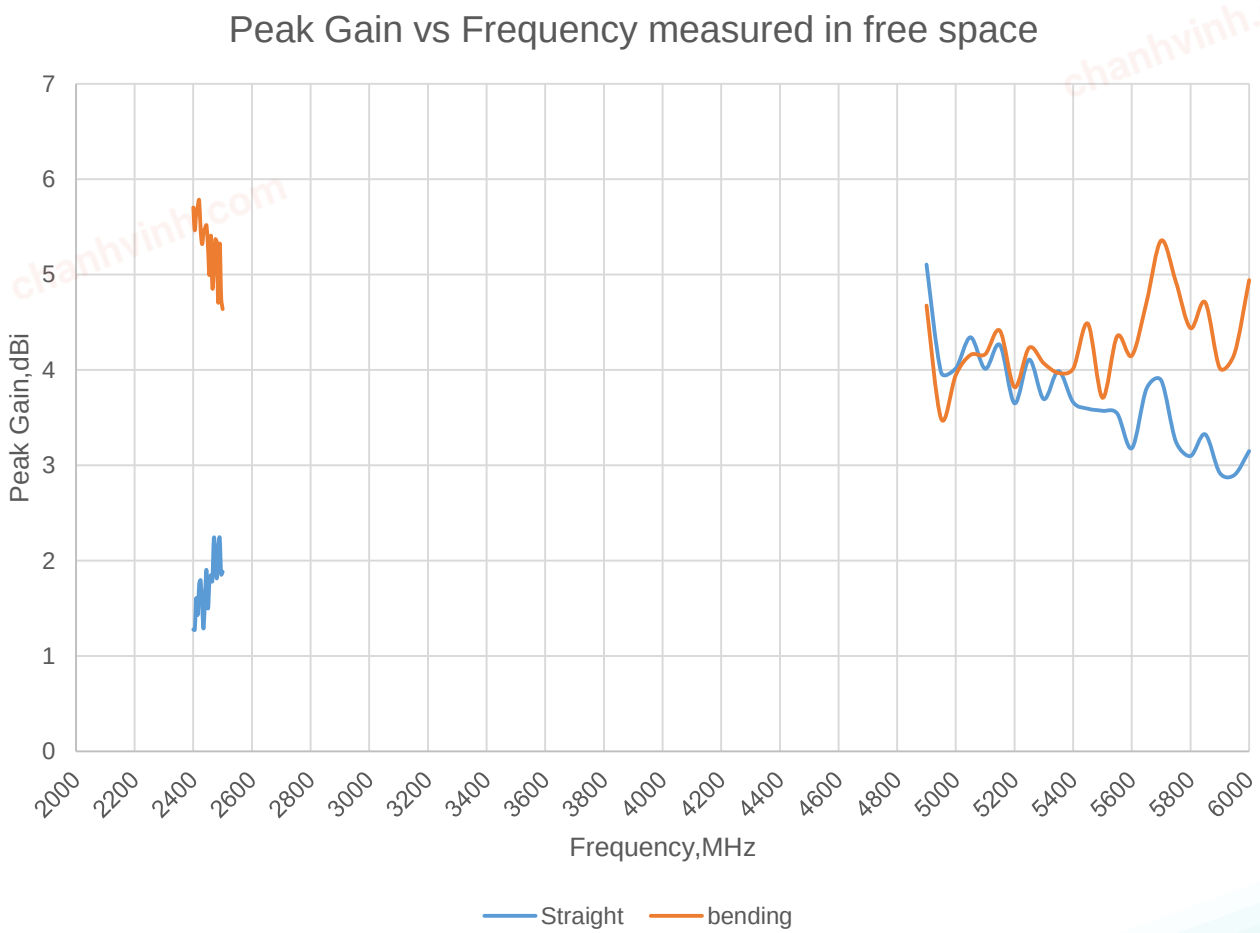

In the effort to improve our products, we reserve the right to make changes judged to be necessary.
CONFIDENTIAL AND PROPRIETARY INFORMATION
This document contains confidential and proprietary information of Pulse Electronics, Inc. (Pulse) and is protected by copyright, trade secret and other state and federal laws. Its receipt or possession does not convey any rights to reproduce, disclose its contents, or to manufacture, use or sell anything it may describe. Reproduction, disclosure or use without specific written authorization of Pulse is strictly forbidden.

RoHS COMPLIANT

chanhvinh.com

PulseLARSEN Antennas

TECHNICAL DATA SHEET

Description: Outdoor IP67 Dual WiFi / DSCR, Standard SMA 90deg Swivel

Series: Stick Antenna

PART NUMBER: W5097

CHARTS

Gain Plots

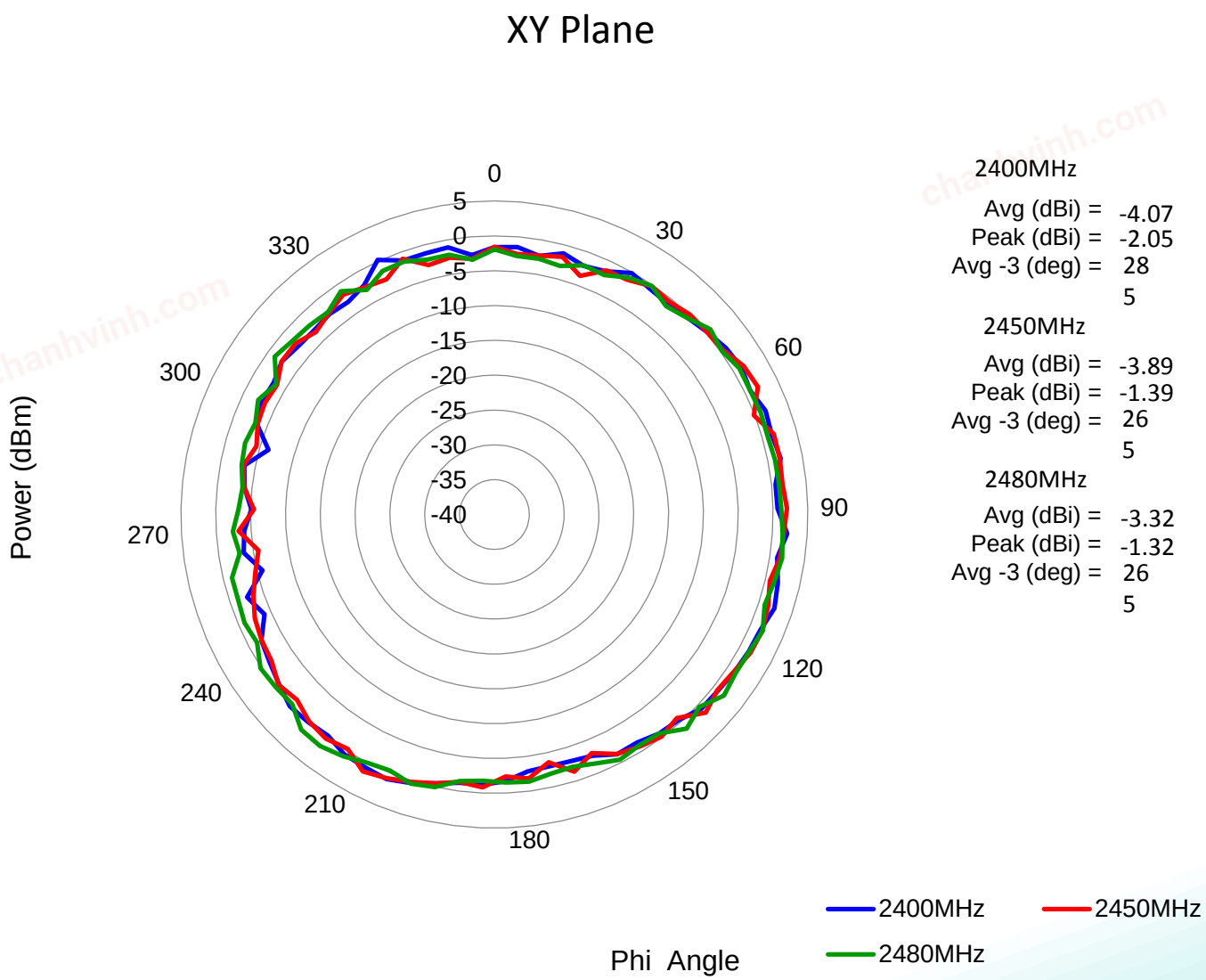

In the effort to improve our products, we reserve the right to make changes judged to be necessary.
CONFIDENTIAL AND PROPRIETARY INFORMATION
This document contains confidential and proprietary information of Pulse Electronics, Inc. (Pulse) and is protected by copyright, trade secret and other state and federal laws. Its receipt or possession does not convey any rights to reproduce, disclose its contents, or to manufacture, use or sell anything it may describe. Reproduction, disclosure or use without specific written authorization of Pulse is strictly forbidden.

RoHS COMPLIANT

chanhvinh.com

PulseLARSEN Antennas

TECHNICAL DATA SHEET

Description: Outdoor IP67 Dual WiFi / DSCR, Standard SMA 90deg Swivel

Series: Stick Antenna

PART NUMBER: W5097

CHARTS

Gain Plots

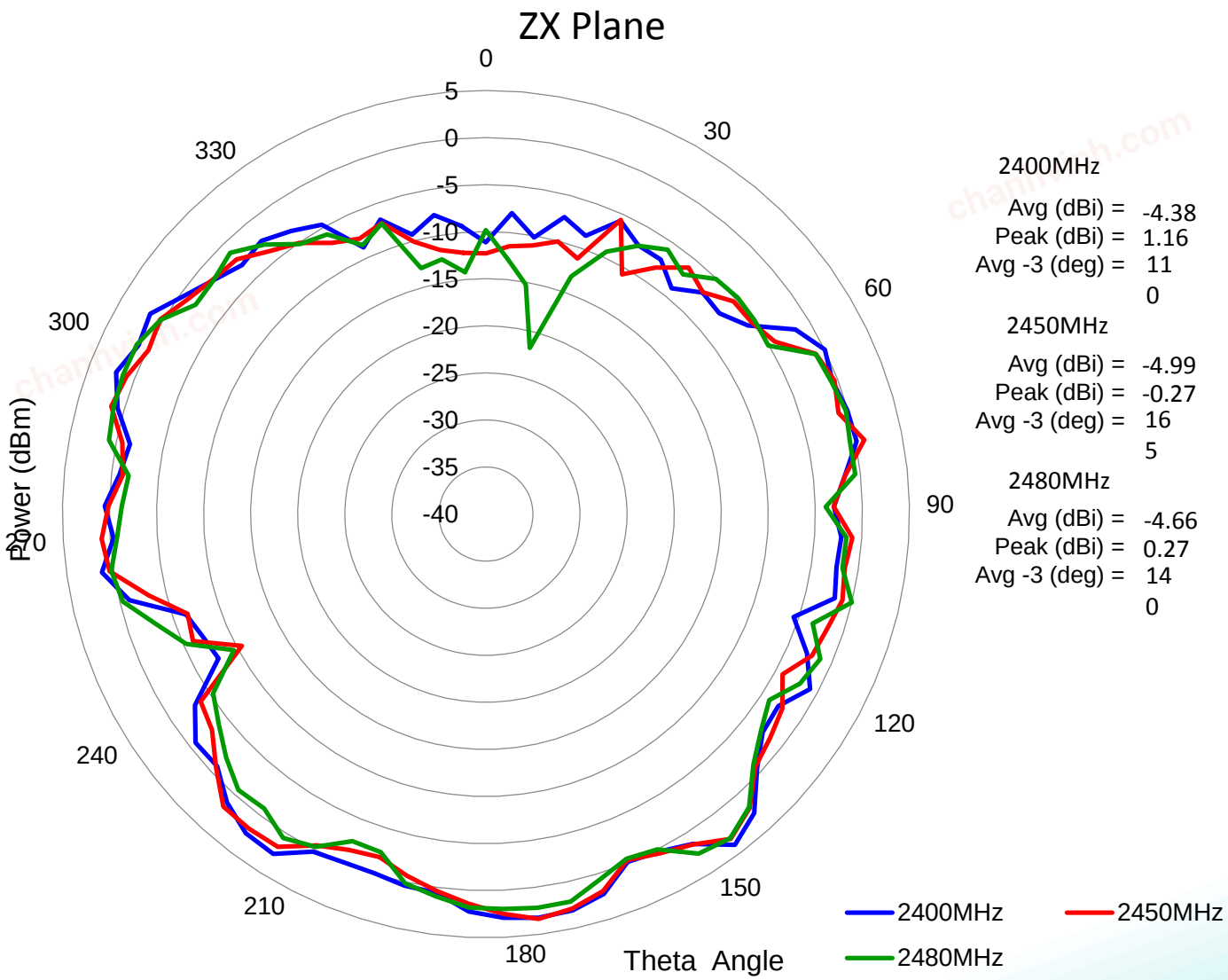

In the effort to improve our products, we reserve the right to make changes judged to be necessary.
CONFIDENTIAL AND PROPRIETARY INFORMATION
This document contains confidential and proprietary information of Pulse Electronics, Inc. (Pulse) and is protected by copyright, trade secret and other state and federal laws. Its receipt or possession does not convey any rights to reproduce, disclose its contents, or to manufacture, use or sell anything it may describe. Reproduction, disclosure or use without specific written authorization of Pulse is strictly forbidden.

RoHS COMPLIANT

chanhvinh.com

PulseLARSEN Antennas

TECHNICAL DATA SHEET

Description: Outdoor IP67 Dual WiFi / DSCR, Standard SMA 90deg Swivel

Series: Stick Antenna

PART NUMBER: W5097

CHARTS

Gain Plots

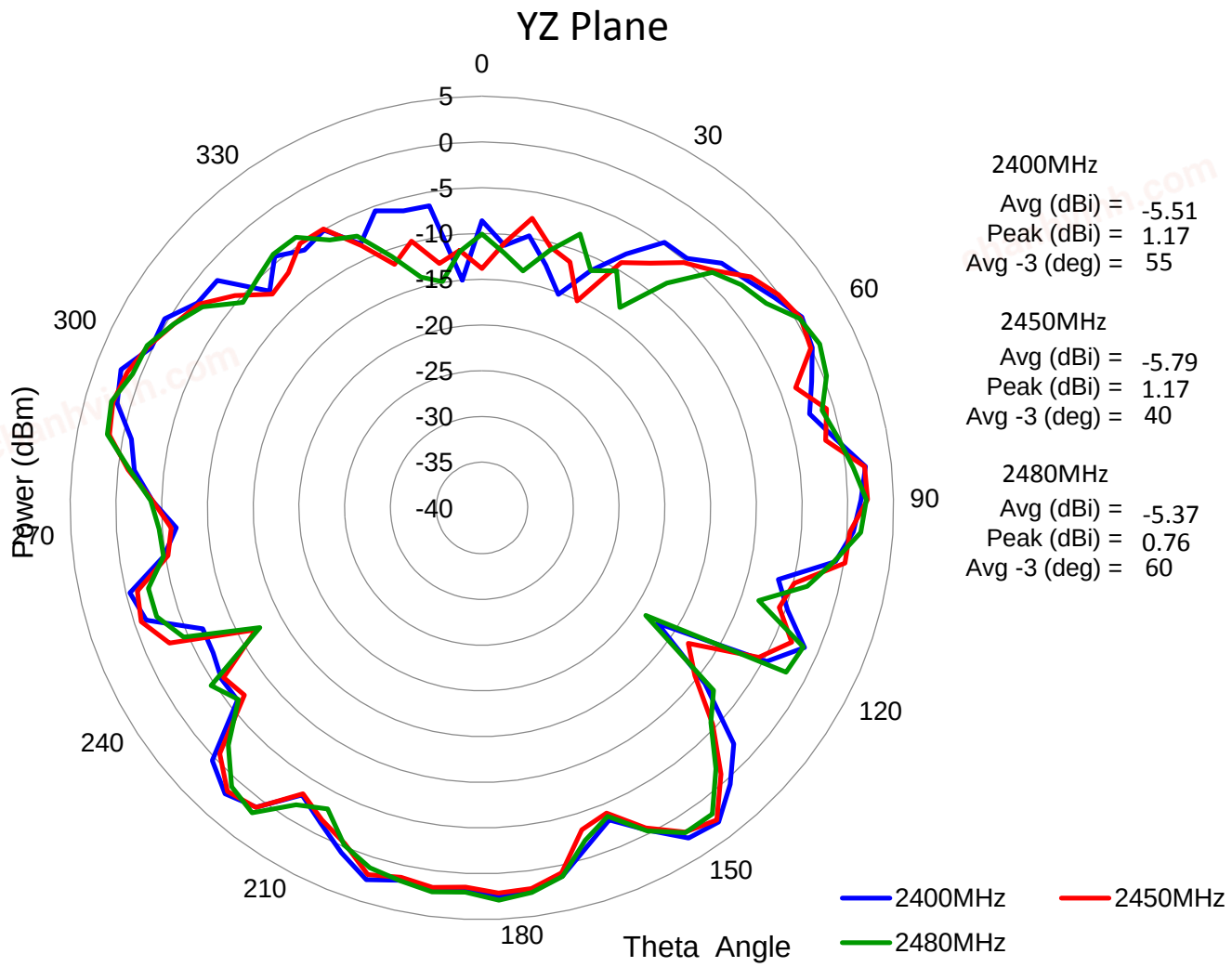

In the effort to improve our products, we reserve the right to make changes judged to be necessary.
CONFIDENTIAL AND PROPRIETARY INFORMATION
This document contains confidential and proprietary information of Pulse Electronics, Inc. (Pulse) and is protected by copyright, trade secret and other state and federal laws. Its receipt or possession does not convey any rights to reproduce, disclose its contents, or to manufacture, use or sell anything it may describe. Reproduction, disclosure or use without specific written authorization of Pulse is strictly forbidden.

RoHS COMPLIANT

chanhvinh.com

PulseLARSEN Antennas

TECHNICAL DATA SHEET

Description: Outdoor IP67 Dual WiFi / DSCR, Standard SMA 90deg Swivel

Series: Stick Antenna

PART NUMBER: W5097

CHARTS

Gain Plots

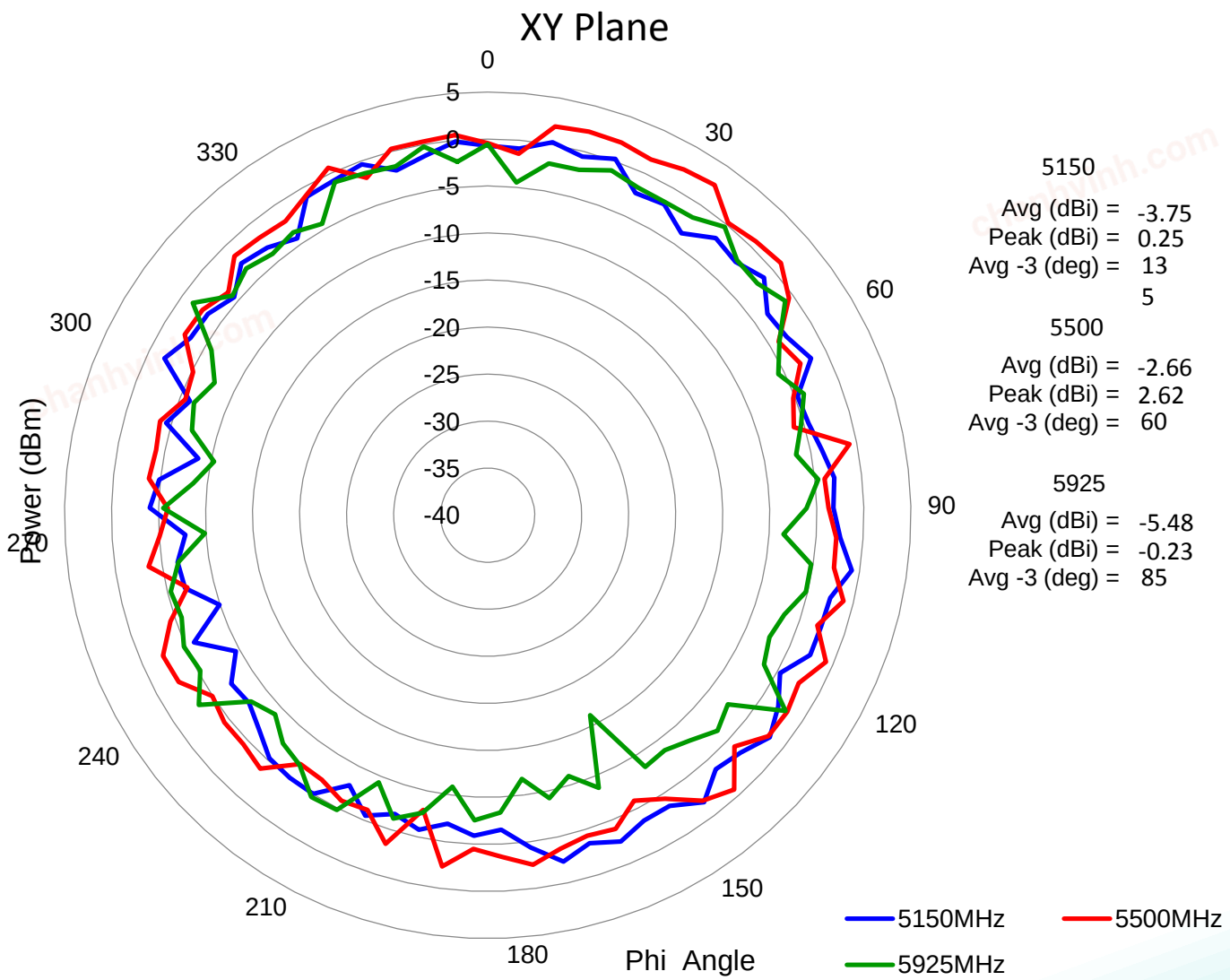

In the effort to improve our products, we reserve the right to make changes judged to be necessary.
CONFIDENTIAL AND PROPRIETARY INFORMATION
This document contains confidential and proprietary information of Pulse Electronics, Inc. (Pulse) and is protected by copyright, trade secret and other state and federal laws. Its receipt or possession does not convey any rights to reproduce, disclose its contents, or to manufacture, use or sell anything it may describe. Reproduction, disclosure or use without specific written authorization of Pulse is strictly forbidden.

RoHS COMPLIANT

chanhvinh.com

PulseLARSEN Antennas

TECHNICAL DATA SHEET

Description: Outdoor IP67 Dual WiFi / DSCR, Standard SMA 90deg Swivel

Series: Stick Antenna

PART NUMBER: W5097

CHARTS

Gain Plots

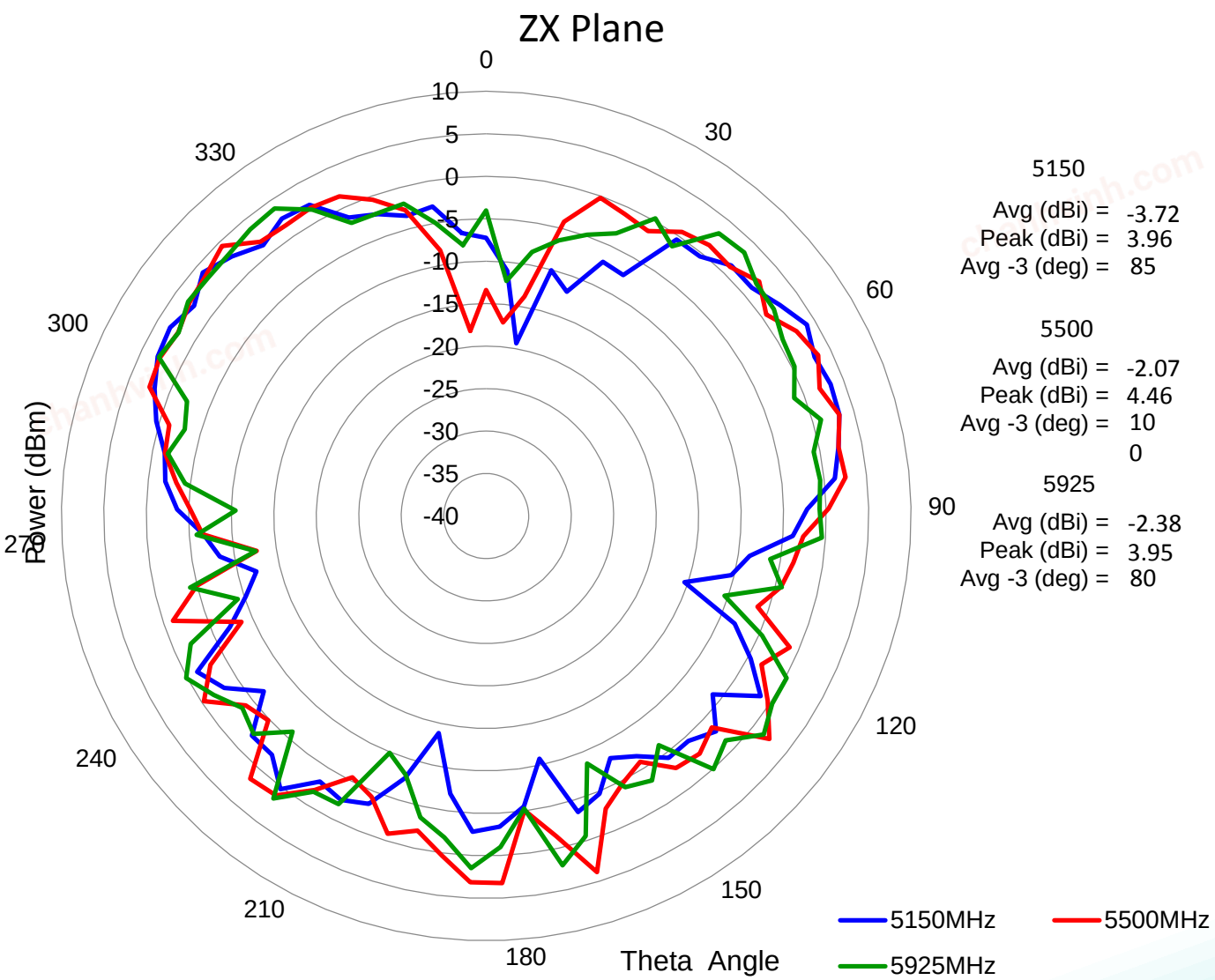

In the effort to improve our products, we reserve the right to make changes judged to be necessary.
CONFIDENTIAL AND PROPRIETARY INFORMATION
This document contains confidential and proprietary information of Pulse Electronics, Inc. (Pulse) and is protected by copyright, trade secret and other state and federal laws. Its receipt or possession does not convey any rights to reproduce, disclose its contents, or to manufacture, use or sell anything it may describe. Reproduction, disclosure or use without specific written authorization of Pulse is strictly forbidden.

RoHS COMPLIANT

chanhvinh.com

PulseLARSEN Antennas

TECHNICAL DATA SHEET

Description: Outdoor IP67 Dual WiFi / DSCR, Standard SMA 90deg Swivel

Series: Stick Antenna

PART NUMBER: W5097

CHARTS

Gain Plots

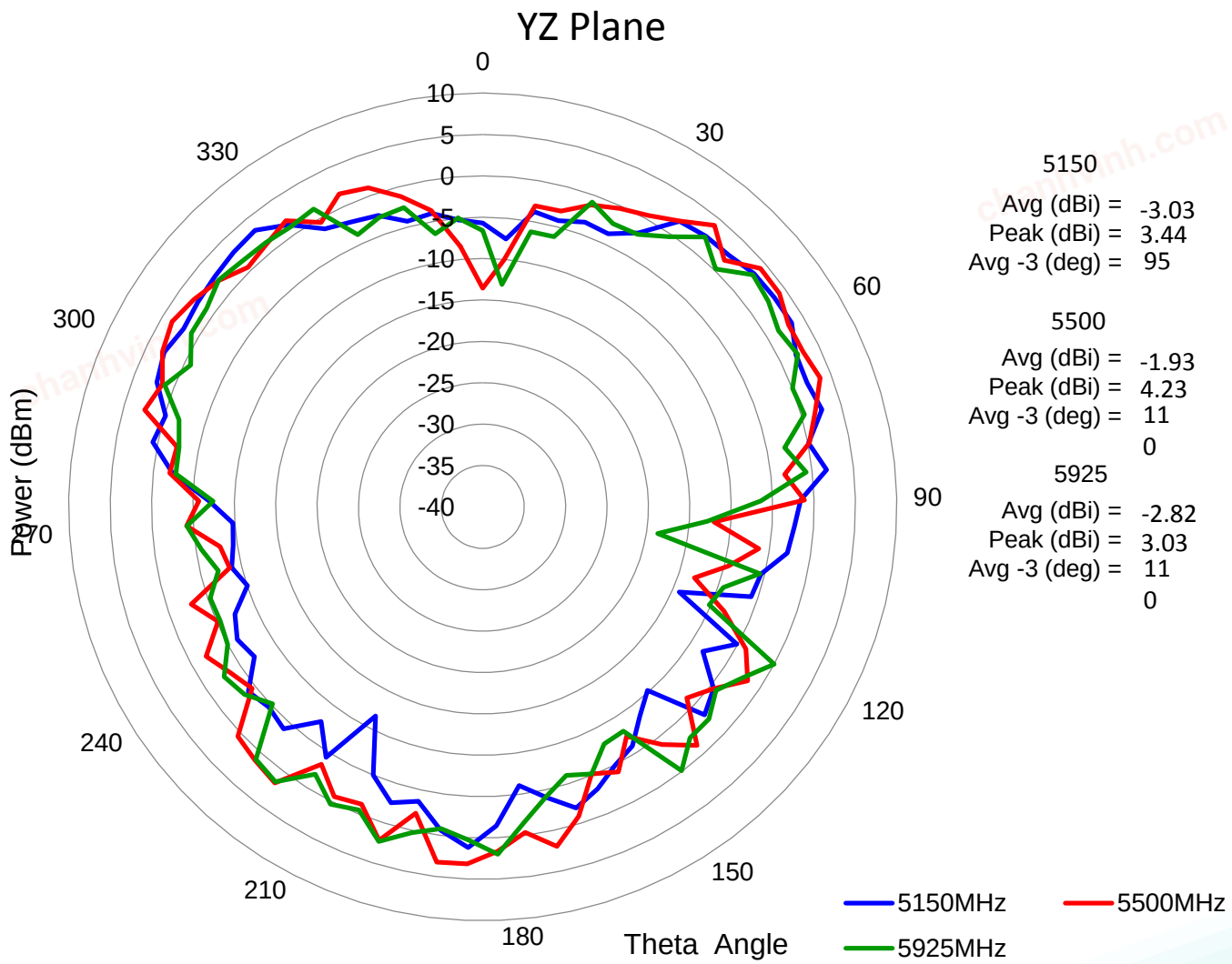

In the effort to improve our products, we reserve the right to make changes judged to be necessary.
CONFIDENTIAL AND PROPRIETARY INFORMATION
This document contains confidential and proprietary information of Pulse Electronics, Inc. (Pulse) and is protected by copyright, trade secret and other state and federal laws. Its receipt or possession does not convey any rights to reproduce, disclose its contents, or to manufacture, use or sell anything it may describe. Reproduction, disclosure or use without specific written authorization of Pulse is strictly forbidden.

RoHS COMPLIANT

chanhvinh.com

PulseLARSEN Antennas

TECHNICAL DATA SHEET

Description: Outdoor IP67 Dual WiFi / DSCR, Standard SMA 90deg Swivel

Series: Stick Antenna

PART NUMBER: W5097

PACKAGING

10PCS/Bullet PE bag
500PCS/Carton Box

In the effort to improve our products, we reserve the right to make changes judged to be necessary.
CONFIDENTIAL AND PROPRIETARY INFORMATION
This document contains confidential and proprietary information of Pulse Electronics, Inc. (Pulse) and is protected by copyright, trade secret and other state and federal laws. Its receipt or possession does not convey any rights to reproduce, disclose its contents, or to manufacture, use or sell anything it may describe. Reproduction, disclosure or use without specific written authorization of Pulse is strictly forbidden.

RoHS COMPLIANT