chanhvinh.com

Pulse
a YAGEO company

TECHNICAL DATA SHEET

Description: Direct Mount WiFi 2400-2500/4900-6000MHz

Series: DM WiFi

PART NUMBER: W4169/W4169G



W4169G



W4169

Features:

- Dual Band Wifi:
  - 2400-2500MHz
  - 4900-6000MHz
- Gain 4/3.5 dBi
- Radiation pattern Omni
- Diameter 50 mm
- Height above mounting surface 22 mm
- Coaxial cable feed with U.FL connector
- IP67

Applications:

- WiFi, Bluetooth, BLE, ZigBee
- DSRC
- IoT, Metering, Vending
- Transportation

All dimensions are in mm / inches

Issue: 2241

RoHS COMPLIANT

In the effort to improve our products, we reserve the right to make changes judged to be necessary.

CONFIDENTIAL AND PROPRIETARY INFORMATION
This document contains confidential and proprietary information of Pulse Electronics, Inc. (Pulse) and is protected by copyright, trade secret and other state and federal laws. Its receipt or possession does not convey any rights to reproduce, disclose its contents, or to manufacture, use or sell anything it may describe. Reproduction, disclosure or use without specific written authorization of Pulse is strictly forbidden.

For more information:

Pulse Worldwide Headquarters
15255 Innovation Drive #100
San Diego, CA 92128
USA
Tel:1-858-674-8100

Pulse/Larsen Antennas
18110 SE 34th St Bldg 2 Suite 250
Vancouver, WA 98683
USA
Tel: 1-360-944-7551

Europe Headquarters
Pulse GmbH & Do, KG
Zeppelinstrasse 15
Herrenberg, Germany
Tel: 49 7032 7806 0

Pulse (Suzhou) Wireless Products Co, Inc.
99 Huo Ju Road(#29 Bldg,4th Phase
Suzhou New District
Jiangsu Province, Suzhou 215009 PR China
Tel: 86 512 6807 9998

chanhvinh.com

Pulse
a YAGEO company

TECHNICAL DATA SHEET

Description: Direct Mount WiFi 2400-2500/4900-6000MHz

Series: DM WiFi

PART NUMBER: W4169/W4169G

ELECTRICAL SPECIFICATIONS

Antenna Type	PCB , PIFA
Frequency	2.4-2.5GHz/4.9-6GHz
Nominal Impedance	50 Ω
VSWR	2.4-2.5GHz < 2
	4.9-6GHz < 2
Radiation Pattern	Omni
Gain	2.4-2.5GHz 4dBi
	4.9-6GHz 3.5dBi
Polarization	Vertical
Power Withstanding	1W

MECHANICAL SPECIFICATIONS

Overall Length	22.1*Φ50mm
Weight	60g
Antenna Color	W1469 Black
	W1469G Grey
Connector type	Equivalent of U.FL
Cable type	1.13mm
Cable length	304.8mm

ENVIRONMENTAL SPECIFICATIONS

Operating Temperature	-40-+85° C
Storage Temperature	-40-+85° C
Ingress Protection	IP67
RoHS Compliant	Yes

All RF measurement data are tested on Ø=500mm ground plane

In the effort to improve our products, we reserve the right to make changes judged to be necessary.
CONFIDENTIAL AND PROPRIETARY INFORMATION
This document contains confidential and proprietary information of Pulse Electronics, Inc. (Pulse) and is protected by copyright, trade secret and other state and federal laws. Its receipt or possession does not convey any rights to reproduce, disclose its contents, or to manufacture, use or sell anything it may describe. Reproduction, disclosure or use without specific written authorization of Pulse is strictly forbidden.

RoHS COMPLIANT

chanhvinh.com

Pulse
a YAGEO company

TECHNICAL DATA SHEET

Description: Direct Mount WiFi 2400-2500/4900-6000MHz

Series: DM WiFi

PART NUMBER: W4169/W4169G

MECHANICAL DRAWING

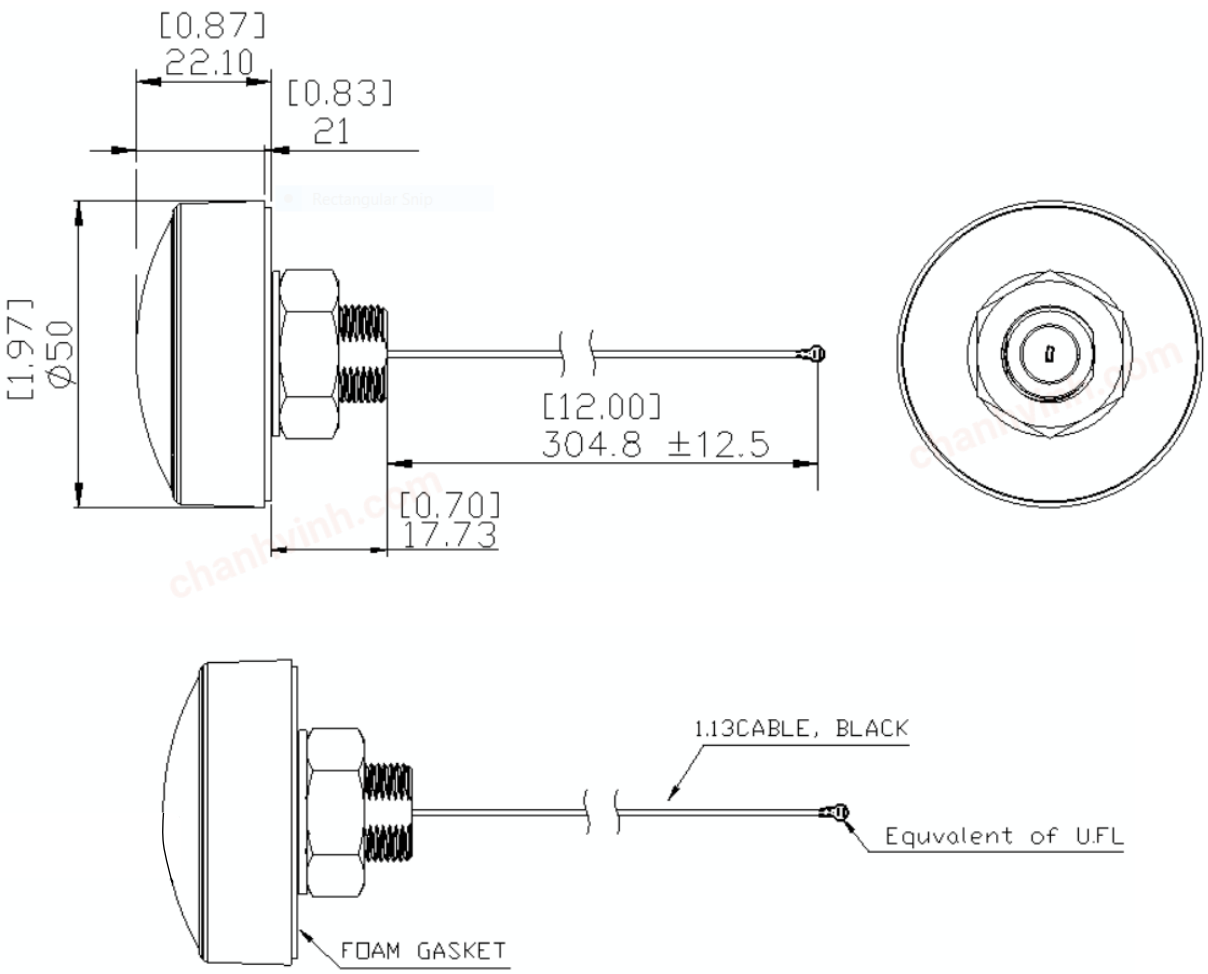

In the effort to improve our products, we reserve the right to make changes judged to be necessary.
CONFIDENTIAL AND PROPRIETARY INFORMATION
This document contains confidential and proprietary information of Pulse Electronics, Inc. (Pulse) and is protected by copyright, trade secret and other state and federal laws. Its receipt or possession does not convey any rights to reproduce, disclose its contents, or to manufacture, use or sell anything it may describe. Reproduction, disclosure or use without specific written authorization of Pulse is strictly forbidden.

RoHS COMPLIANT

chanhvinh.com

Pulse
a YAGEO company

TECHNICAL DATA SHEET

Description: Direct Mount WiFi 2400-2500/4900-6000MHz

Series: DM WiFi

PART NUMBER: W4169/W4169G

Test setup

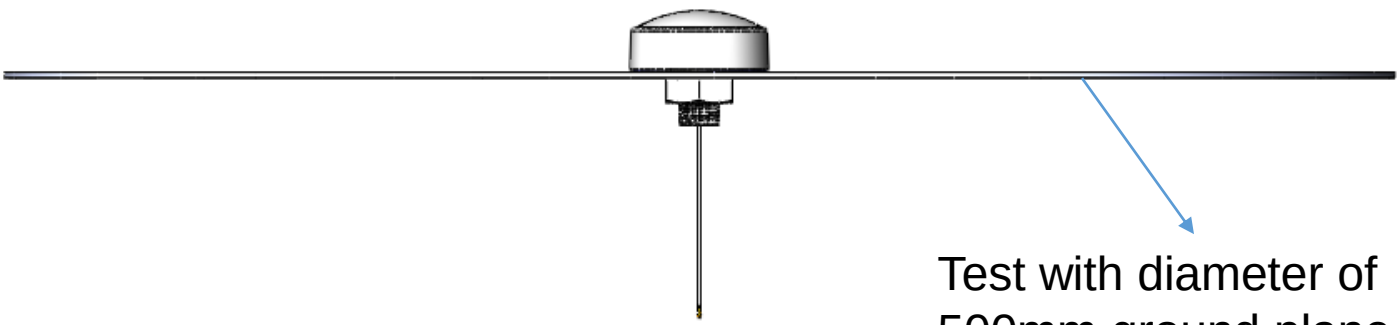

VSWR

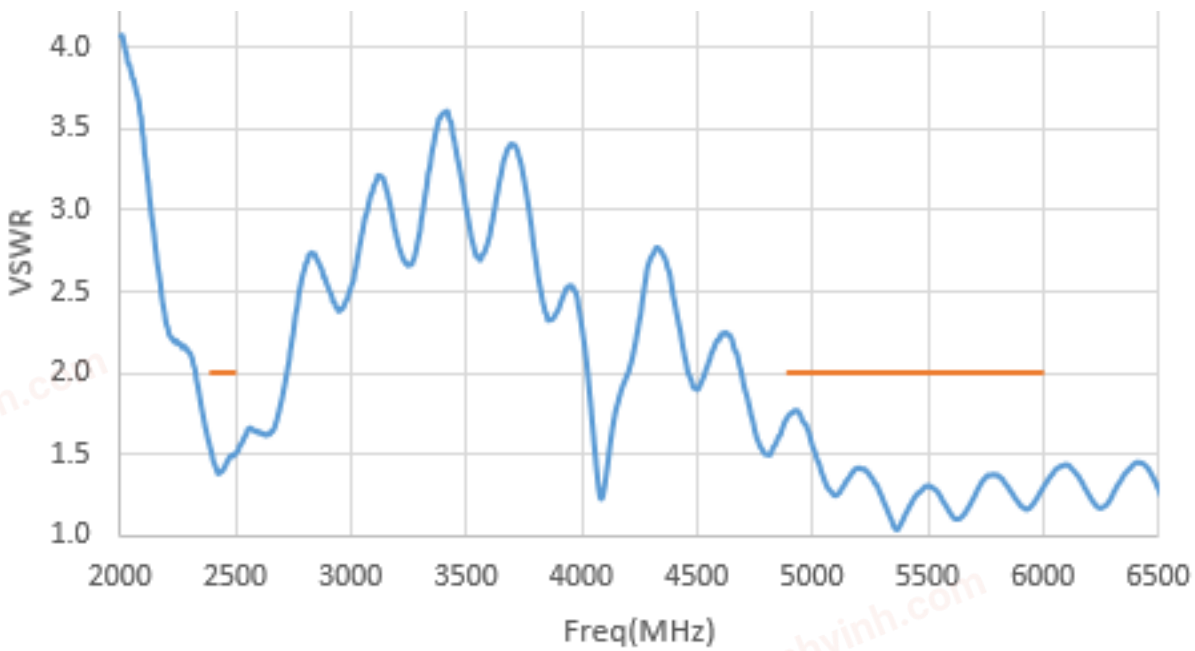

Issue: 2241

In the effort to improve our products, we reserve the right to make changes judged to be necessary.
CONFIDENTIAL AND PROPRIETARY INFORMATION
This document contains confidential and proprietary information of Pulse Electronics, Inc. (Pulse) and is protected by copyright, trade secret and other state and federal laws. Its receipt or possession does not convey any rights to reproduce, disclose its contents, or to manufacture, use or sell anything it may describe. Reproduction, disclosure or use without specific written authorization of Pulse is strictly forbidden.

RoHS COMPLIANT

chanhvinh.com

Pulse
a YAGEO company

TECHNICAL DATA SHEET

Description: Direct Mount WiFi 2400-2500/4900-6000MHz

Series: DM WiFi

PART NUMBER: W4169/W4169G

CHARTS

Efficiency(%)

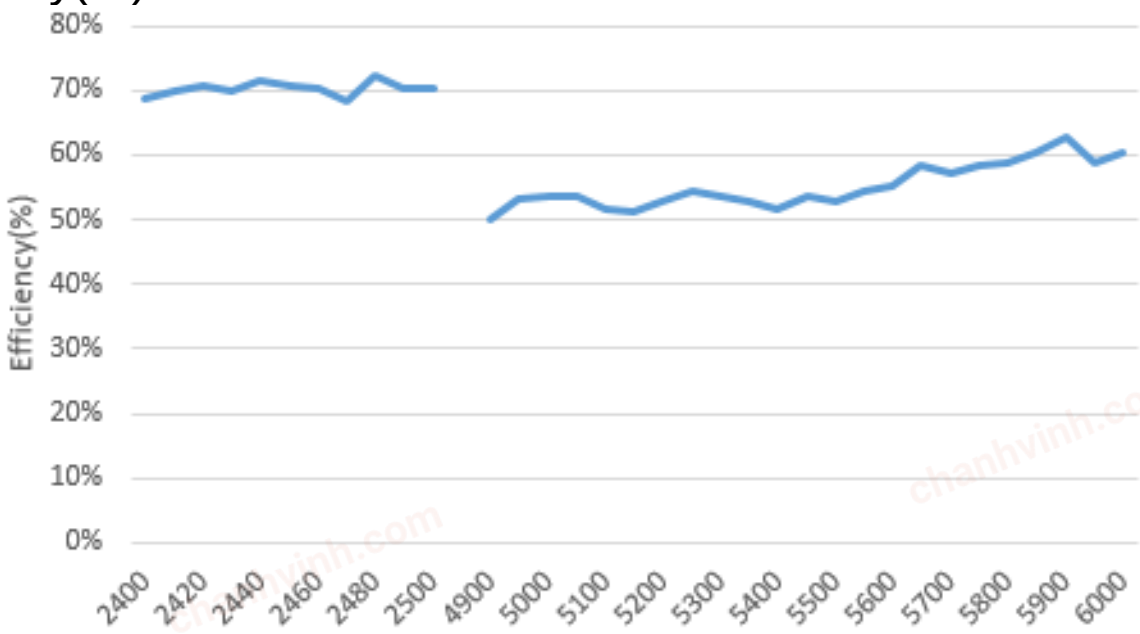

Peak Gain (dBi)

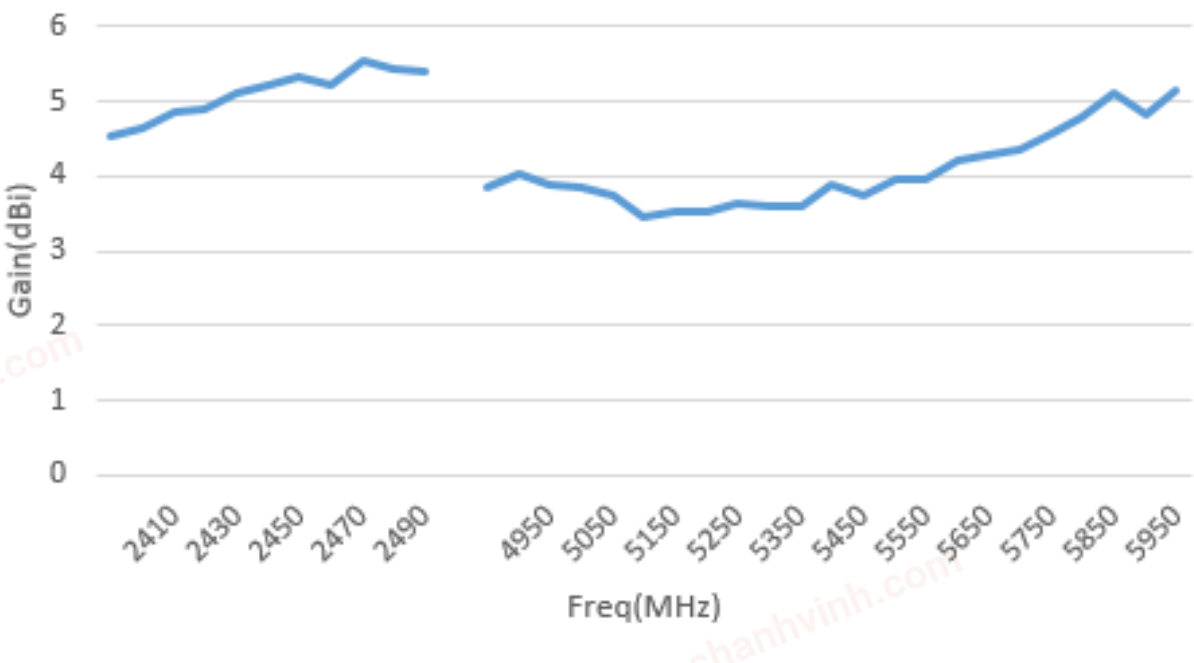

In the effort to improve our products, we reserve the right to make changes judged to be necessary.
CONFIDENTIAL AND PROPRIETARY INFORMATION
This document contains confidential and proprietary information of Pulse Electronics, Inc. (Pulse) and is protected by copyright, trade secret and other state and federal laws. Its receipt or possession does not convey any rights to reproduce, disclose its contents, or to manufacture, use or sell anything it may describe. Reproduction, disclosure or use without specific written authorization of Pulse is strictly forbidden.

RoHS COMPLIANT

chanhvinh.com

Pulse
a YAGEO company

TECHNICAL DATA SHEET

Series: DM WiFi

Description: Direct Mount WiFi 2400-2500/4900-6000MHz

PART NUMBER: W4169/W4169G

CHARTS

Radiation Pattern

Elevation Plane

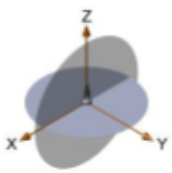

XZ Plane

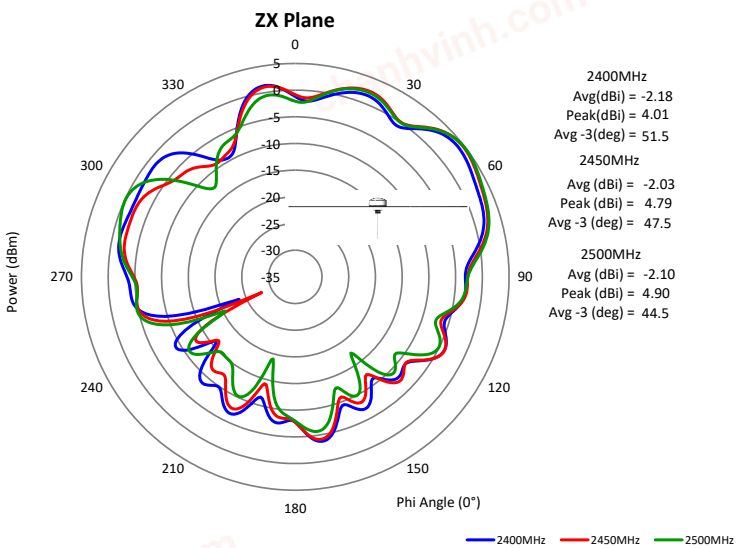

Horizontal Plane

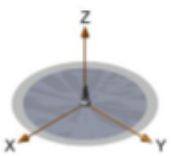

XY Plane

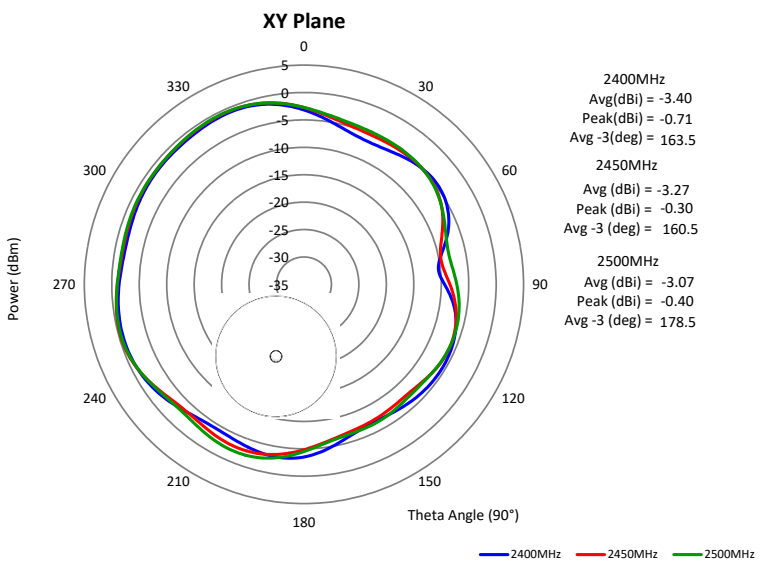

In the effort to improve our products, we reserve the right to make changes judged to be necessary.
CONFIDENTIAL AND PROPRIETARY INFORMATION
This document contains confidential and proprietary information of Pulse Electronics, Inc. (Pulse) and is protected by copyright, trade secret and other state and federal laws. Its receipt or possession does not convey any rights to reproduce, disclose its contents, or to manufacture, use or sell anything it may describe. Reproduction, disclosure or use without specific written authorization of Pulse is strictly forbidden.

RoHS COMPLIANT

chanhvinh.com

Pulse
a YAGEO company

TECHNICAL DATA SHEET

Series: DM WiFi

Description: Direct Mount WiFi 2400-2500/4900-6000MHz

PART NUMBER: W4169/W4169G

CHARTS

Radiation Pattern

Elevation Plane

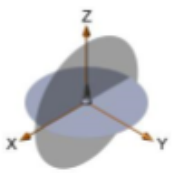

XZ Plane

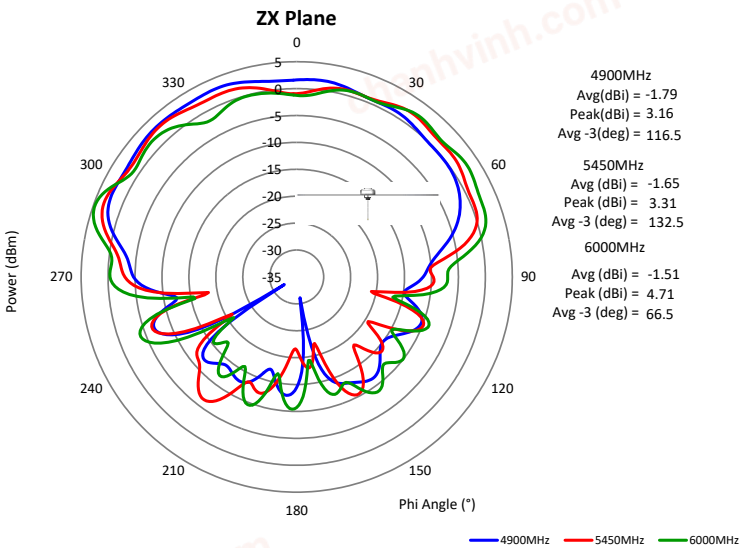

Horizontal Plane

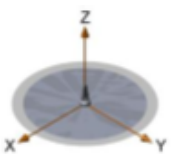

XY Plane

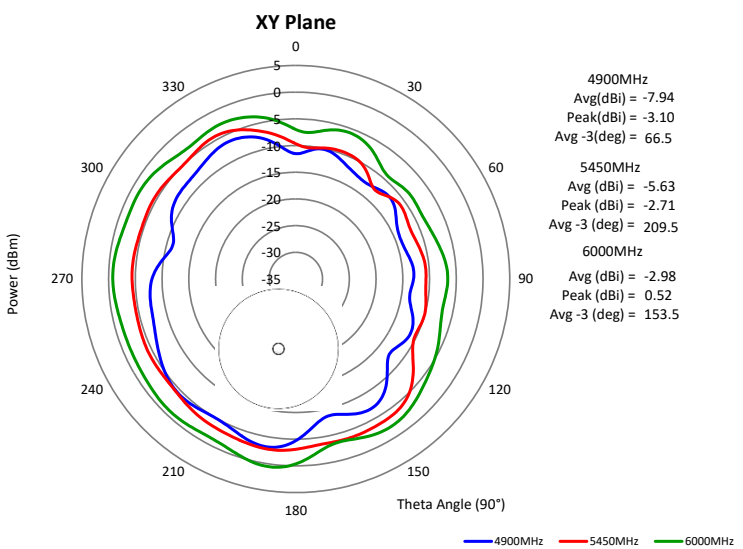

In the effort to improve our products, we reserve the right to make changes judged to be necessary.
CONFIDENTIAL AND PROPRIETARY INFORMATION
This document contains confidential and proprietary information of Pulse Electronics, Inc. (Pulse) and is protected by copyright, trade secret and other state and federal laws. Its receipt or possession does not convey any rights to reproduce, disclose its contents, or to manufacture, use or sell anything it may describe. Reproduction, disclosure or use without specific written authorization of Pulse is strictly forbidden.

RoHS COMPLIANT

chanhvinh.com

Description: Direct Mount WiFi 2400-2500/4900-6000MHz

Series: DM WiFi

PART NUMBER: W4169/W4169G

PACKAGING

1pcs antennas per PE bag

21pcs antennas per package box

Total 21pcs antenna per package box

Package box: 460mm*235mm*140mm

In the effort to improve our products, we reserve the right to make changes judged to be necessary.
CONFIDENTIAL AND PROPRIETARY INFORMATION
This document contains confidential and proprietary information of Pulse Electronics, Inc. (Pulse) and is protected by copyright, trade secret and other state and federal laws. Its receipt or possession does not convey any rights to reproduce, disclose its contents, or to manufacture, use or sell anything it may describe. Reproduction, disclosure or use without specific written authorization of Pulse is strictly forbidden.