chanhvinh.com

Pulse | LARSEN Antennas
A YAGEO Company

TECHNICAL DATA SHEET

Description:

13.56MHz Flex Antenna with Ferrite

PART NUMBER: W3580

Series: NFC Antenna



Features:

- Frequency 13.56 MHz
- Size 35 x 50 x 0.48 mm
- Thin semi flexible structure
- Includes Ferrite sheet to enable operation in close proximity to metal
- Mounting with adhesive tape

Applications:

- Mobile Devices
- Pairing, Sharing
- Payment terminals
- NFC
- RFID

All dimensions are in mm / inches

Issue: 1950

RoHS COMPLIANT

In the effort to improve our products, we reserve the right to make changes judged to be necessary.
CONFIDENTIAL AND PROPRIETARY INFORMATION
This document contains confidential and proprietary information of Pulse Electronics, Inc. (Pulse) and is protected by copyright, trade secret and other state and federal laws. Its receipt or possession does not convey any rights to reproduce, disclose its contents, or to manufacture, use or sell anything it may describe. Reproduction, disclosure or use without specific written authorization of Pulse is strictly forbidden.

For more information:

Pulse Worldwide Headquarters
15255 Innovation Drive #100
San Diego, CA 92128
USA
Tel:1-858-674-8100

Pulse/Larsen Antennas
18110 SE 34th St Bldg 2 Suite 250
Vancouver, WA 98683
USA
Tel: 1-360-944-7551

Europe Headquarters
Pulse GmbH & Do, KG
Zeppelinstrasse 15
Herrenberg, Germany
Tel: 49 7032 7806 0

Pulse (Suzhou) Wireless Products Co, Inc.
99 Huo Ju Road(#29 Bldg,4th Phase
Suzhou New District
Jiangsu Province, Suzhou 215009 PR China
Tel: 86 512 6807 9998

chanhvinh.com

Pulse | LARSEN Antennas
A YAGEO Company

TECHNICAL DATA SHEET

Description:
13.56MHz Flex Antenna with Ferrite

Series: NFC Antenna

PART NUMBER: W3580

ELECTRICAL SPECIFICATIONS

Antenna Type	Coil Antenna
Frequency	13.56MHz
Reading Distance	20mm EMVco
	15mm Card (avg.)
Impedance	50ohm /80 ohm
Self Resonance Frequency	46MHz
Inductance	1.30uH
Resistance	3.25ohm
Q -Factor	34
Matched Q Value	5-15

MECHANICAL SPECIFICATIONS

Overall Length	58mm
Weight	1.2g
Antenna Color / Material	Yellow FPC + Ferrite
Mounting Method	Adhesive Tape

ENVIRONMENTAL SPECIFICATIONS

Operating Temperature	-40~ +85° C
Storage Temperature	-40~ +85° C
RoHS Compliant	Yes

In the effort to improve our products, we reserve the right to make changes judged to be necessary.
CONFIDENTIAL AND PROPRIETARY INFORMATION
This document contains confidential and proprietary information of Pulse Electronics, Inc. (Pulse) and is protected by copyright, trade secret and other state and federal laws. Its receipt or possession does not convey any rights to reproduce, disclose its contents, or to manufacture, use or sell anything it may describe. Reproduction, disclosure or use without specific written authorization of Pulse is strictly forbidden.

RoHS COMPLIANT

chanhvinh.com

Pulse | LARSEN Antennas
A YAGEO Company

TECHNICAL DATA SHEET

Description:
13.56MHz Flex Antenna with Ferrite

Series: NFC Antenna

PART NUMBER: W3580

MECHANICAL DRAWING

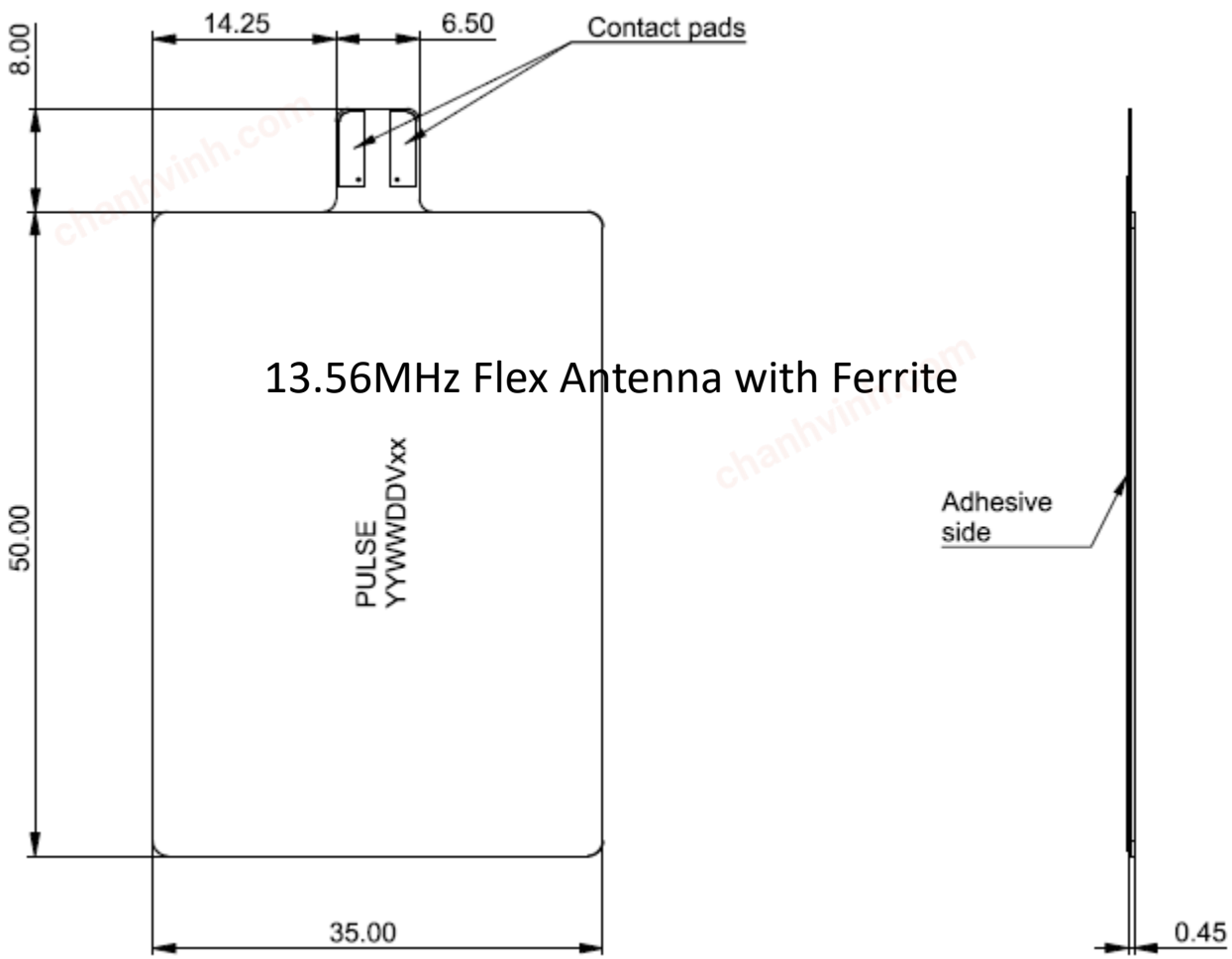

In the effort to improve our products, we reserve the right to make changes judged to be necessary.
CONFIDENTIAL AND PROPRIETARY INFORMATION
This document contains confidential and proprietary information of Pulse Electronics, Inc. (Pulse) and is protected by copyright, trade secret and other state and federal laws. Its receipt or possession does not convey any rights to reproduce, disclose its contents, or to manufacture, use or sell anything it may describe. Reproduction, disclosure or use without specific written authorization of Pulse is strictly forbidden.

RoHS COMPLIANT

chanhvinh.com

Pulse | LARSEN Antennas
A YAGEO Company

TECHNICAL DATA SHEET

Description:
13.56MHz Flex Antenna with Ferrite

Series: NFC Antenna

PART NUMBER: W3580

Recommended matching circuit

Component	Value	Note
Lemc	560 nH	Filter resonance at 15.4 MHz
Cemc	180 pF	Filter resonance at 15.4 MHz
C1	51 pF	Antenna matching component, value depends on the antenna environment Antenna matching
C2	198 pF	Antenna matching component, value depends on the antenna environment Antenna matching
Rq	0 Ohm	Rq resistors used to lower Q-value

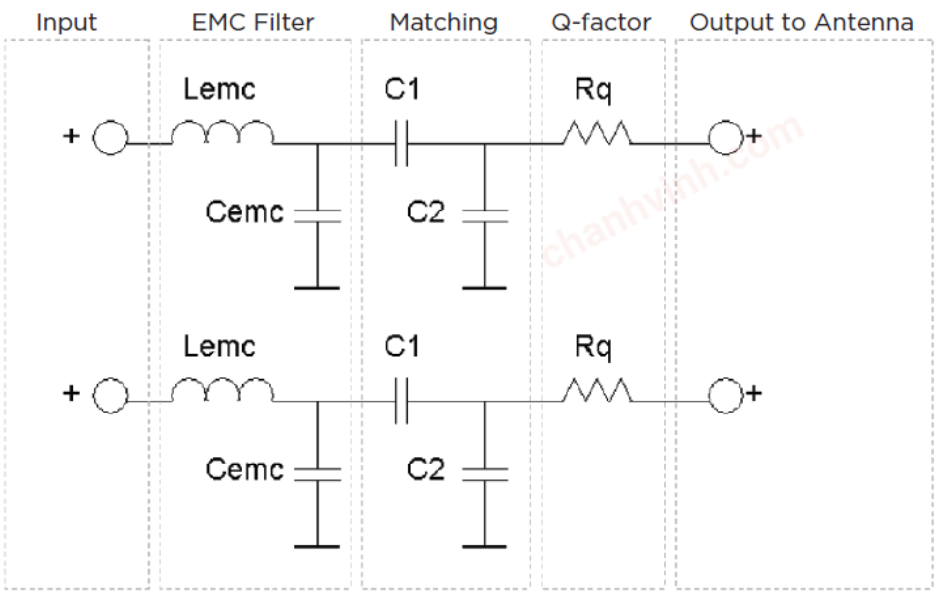

In the effort to improve our products, we reserve the right to make changes judged to be necessary.
CONFIDENTIAL AND PROPRIETARY INFORMATION
This document contains confidential and proprietary information of Pulse Electronics, Inc. (Pulse) and is protected by copyright, trade secret and other state and federal laws. Its receipt or possession does not convey any rights to reproduce, disclose its contents, or to manufacture, use or sell anything it may describe. Reproduction, disclosure or use without specific written authorization of Pulse is strictly forbidden.

RoHS COMPLIANT

chanhvinh.com

Pulse | LARSEN Antennas
A YAGEO Company

TECHNICAL DATA SHEET

Description:
13.56MHz Flex Antenna with Ferrite

Series: NFC Antenna

PART NUMBER: W3580

TEST SETUP

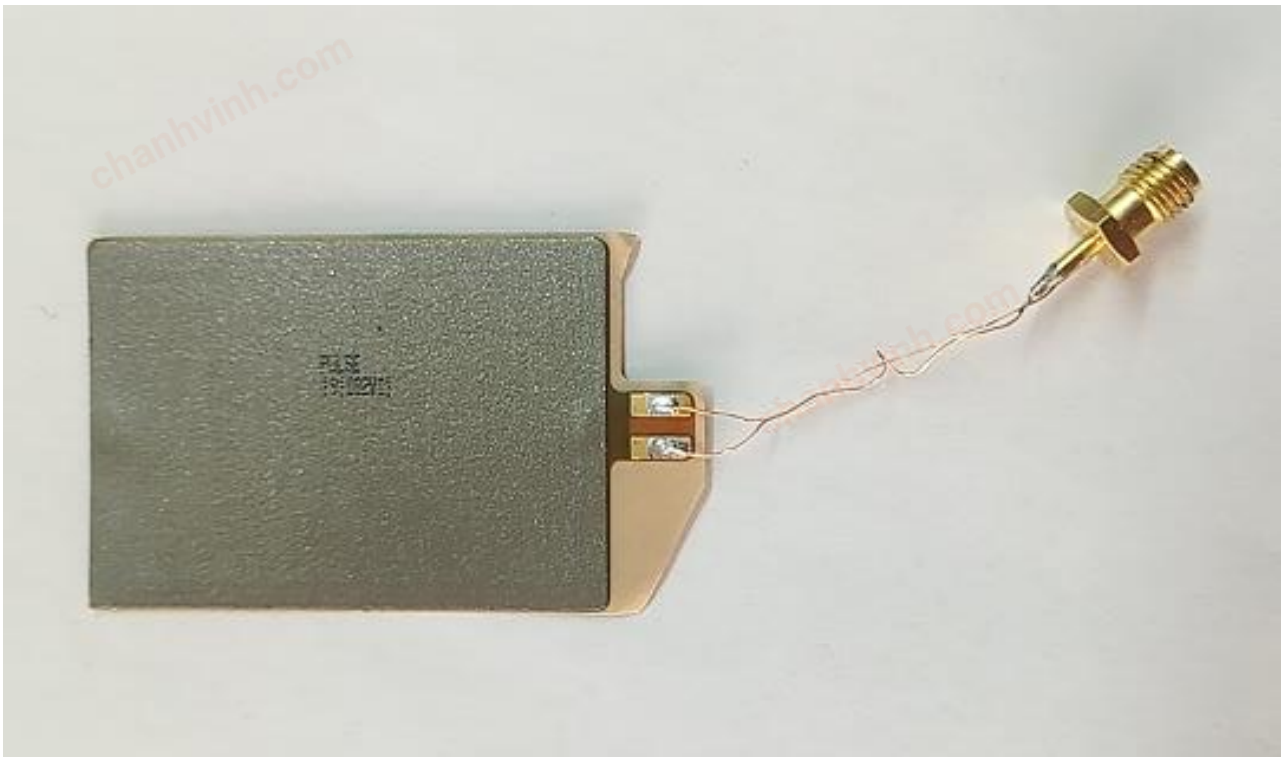

In the effort to improve our products, we reserve the right to make changes judged to be necessary.
CONFIDENTIAL AND PROPRIETARY INFORMATION
This document contains confidential and proprietary information of Pulse Electronics, Inc. (Pulse) and is protected by copyright, trade secret and other state and federal laws. Its receipt or possession does not convey any rights to reproduce, disclose its contents, or to manufacture, use or sell anything it may describe. Reproduction, disclosure or use without specific written authorization of Pulse is strictly forbidden.

RoHS COMPLIANT

chanhvinh.com

Pulse | LARSEN Antennas
A YAGEO Company

TECHNICAL DATA SHEET

Description:
13.56MHz Flex Antenna with Ferrite

Series: NFC Antenna

PART NUMBER: W3580

CHARTS

W3580 Parameters without matching circuit

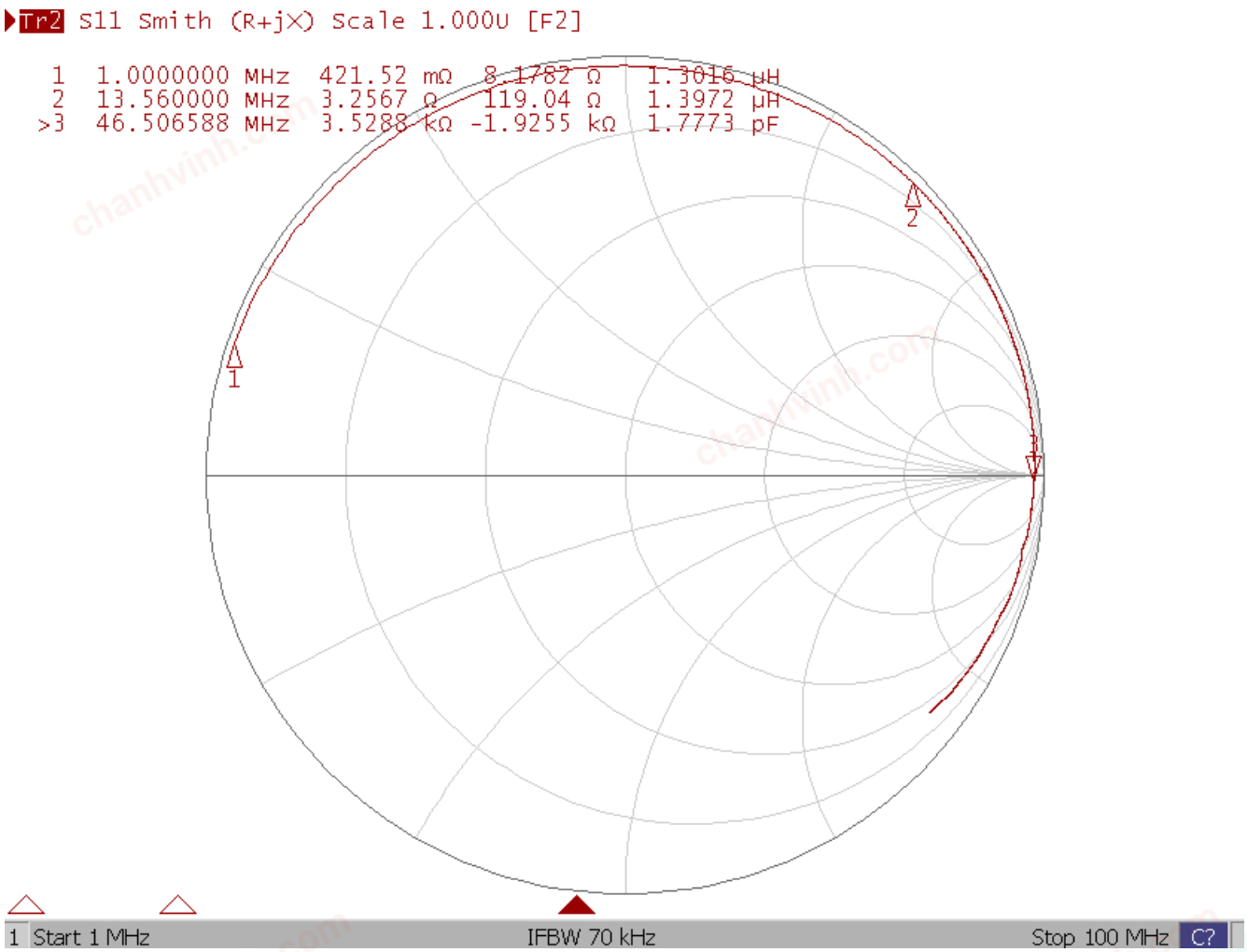

In the effort to improve our products, we reserve the right to make changes judged to be necessary.
CONFIDENTIAL AND PROPRIETARY INFORMATION
This document contains confidential and proprietary information of Pulse Electronics, Inc. (Pulse) and is protected by copyright, trade secret and other state and federal laws. Its receipt or possession does not convey any rights to reproduce, disclose its contents, or to manufacture, use or sell anything it may describe. Reproduction, disclosure or use without specific written authorization of Pulse is strictly forbidden.

RoHS COMPLIANT

chanhvinh.com

Pulse | LARSEN Antennas
A YAGEO Company

TECHNICAL DATA SHEET

Description:
13.56MHz Flex Antenna with Ferrite

Series: NFC Antenna

PART NUMBER: W3580

PACKAGING

10pcs Antennas packed in 1pcs PE Bag,
100pcs PE Bags of Antennas (total 1000pcs) packed in one Carton.

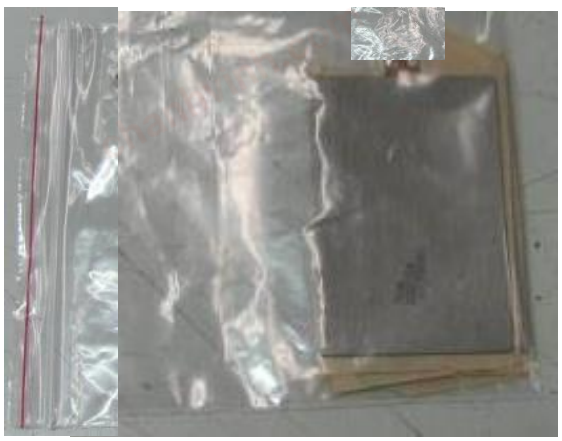



In the effort to improve our products, we reserve the right to make changes judged to be necessary.
CONFIDENTIAL AND PROPRIETARY INFORMATION
This document contains confidential and proprietary information of Pulse Electronics, Inc. (Pulse) and is protected by copyright, trade secret and other state and federal laws. Its receipt or possession does not convey any rights to reproduce, disclose its contents, or to manufacture, use or sell anything it may describe. Reproduction, disclosure or use without specific written authorization of Pulse is strictly forbidden.

RoHS COMPLIANT