chanhvinh.com

Pulse | LARSEN Antennas
A YAGEO Company

TECHNICAL DATA SHEET

Description: 2.4-2.5GHz RHCP 25x25x4mm 6.5dBic patch antenna

Series: Ceramic Patch Antenna

PART NUMBER: W3229



Features:

- 2400-2500 MHz
- Size: 25x25x4mm
- Polarization: RHCP
- Gain: +6.5dBic
- Pin feed, adhesive tape
- RoHS compliant
- Moisture sensitivity level:MSL1

Applications:

- 2.4-2.5GHz ISM Band radios
- WiFi, Bluetooth
- Applications requiring high gain directional antenna pattern

All dimensions are in mm / inches

Issue: 1910

RoHS COMPLIANT

In the effort to improve our products, we reserve the right to make changes judged to be necessary.
CONFIDENTIAL AND PROPRIETARY INFORMATION
This document contains confidential and proprietary information of Pulse Electronics, Inc. (Pulse) and is protected by copyright, trade secret and other state and federal laws. Its receipt or possession does not convey any rights to reproduce, disclose its contents, or to manufacture, use or sell anything it may describe. Reproduction, disclosure or use without specific written authorization of Pulse is strictly forbidden.

For more information:

Pulse Worldwide Headquarters
15255 Innovation Drive #100
San Diego, CA 92128
USA
Tel:1-858-674-8100

Pulse/Larsen Antennas
18110 SE 34th St Bldg 2 Suite 250
Vancouver, WA 98683
USA
Tel: 1-360-944-7551

Europe Headquarters
Pulse GmbH & Do, KG
Zeppelinstrasse 15
Herrenberg, Germany
Tel: 49 7032 7806 0

Pulse (Suzhou) Wireless Products Co, Inc.
99 Huo Ju Road(#29 Bldg,4th Phase
Suzhou New District
Jiangsu Province, Suzhou 215009 PR China
Tel: 86 512 6807 9998

chanhvinh.com

Pulse | LARSEN Antennas
A YAGEO Company

TECHNICAL DATA SHEET

Description: 2.4-2.5GHz RHCP 25x25x4mm 6.5dBic patch antenna

Series: Ceramic Patch Antenna

PART NUMBER: W3229

ELECTRICAL SPECIFICATIONS

Frequency	2400-2500MHz
Nominal Impedance	50 Ω
Return Loss	-7dB
Axial Ratio(typical)	3dB
Peak Gain	6.5dBic
Efficiency	80%
Polarization	RHCP

MECHANICAL SPECIFICATIONS

Overall Length	25x25x4mm
Weight	8.08g
MSL Level	Not applicable for non-reflow part

ENVIRONMENTAL SPECIFICATIONS

Operating Temperature	-40~+105° C
RoHS Compliant	Yes

(*) All RF parameters measured on 70*70mm metal ground plane in free space.

In the effort to improve our products, we reserve the right to make changes judged to be necessary.
CONFIDENTIAL AND PROPRIETARY INFORMATION
This document contains confidential and proprietary information of Pulse Electronics, Inc. (Pulse) and is protected by copyright, trade secret and other state and federal laws. Its receipt or possession does not convey any rights to reproduce, disclose its contents, or to manufacture, use or sell anything it may describe. Reproduction, disclosure or use without specific written authorization of Pulse is strictly forbidden.

RoHS COMPLIANT

chanhvinh.com

Pulse | LARSEN Antennas
A YAGEO Company

TECHNICAL DATA SHEET

Description: 2.4-2.5GHz RHCP 25x25x4mm 6.5dBic patch antenna

Series: Ceramic Patch Antenna

PART NUMBER: W3229

MECHANICAL DRAWING

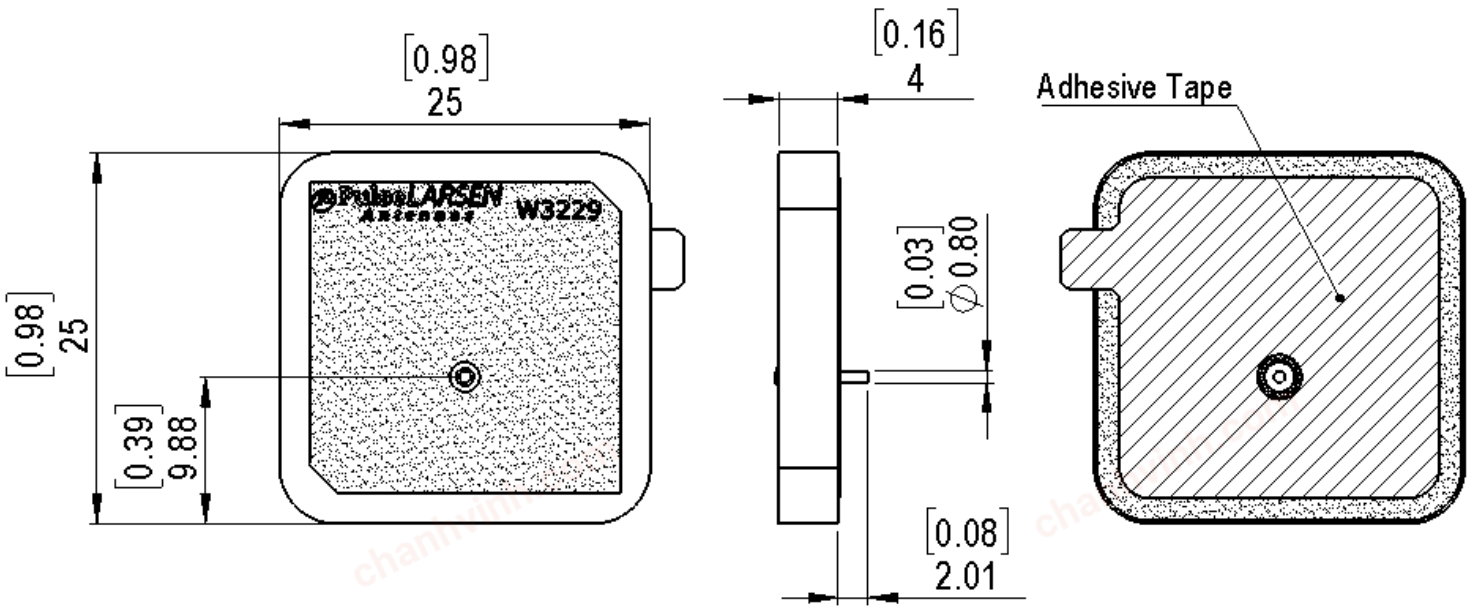

NO.	Description	Structure and material
1	Antenna Substrate	Dielectric Ceramics
2	Pin	Copper and tinplated
3	Electrode	Ag Plated
4	Ground Base	Ag Plated
5	Adhesive type	NITTO 5000NS

Issue: 1910

In the effort to improve our products, we reserve the right to make changes judged to be necessary.
CONFIDENTIAL AND PROPRIETARY INFORMATION
This document contains confidential and proprietary information of Pulse Electronics, Inc. (Pulse) and is protected by copyright, trade secret and other state and federal laws. Its receipt or possession does not convey any rights to reproduce, disclose its contents, or to manufacture, use or sell anything it may describe. Reproduction, disclosure or use without specific written authorization of Pulse is strictly forbidden.

RoHS COMPLIANT

chanhvinh.com

Pulse | LARSEN Antennas
A YAGEO Company

TECHNICAL DATA SHEET

Description: 2.4-2.5GHz RHCP 25x25x4mm 6.5dBic patch antenna

Series: Ceramic Patch Antenna

PART NUMBER: W3229

TEST SETUP

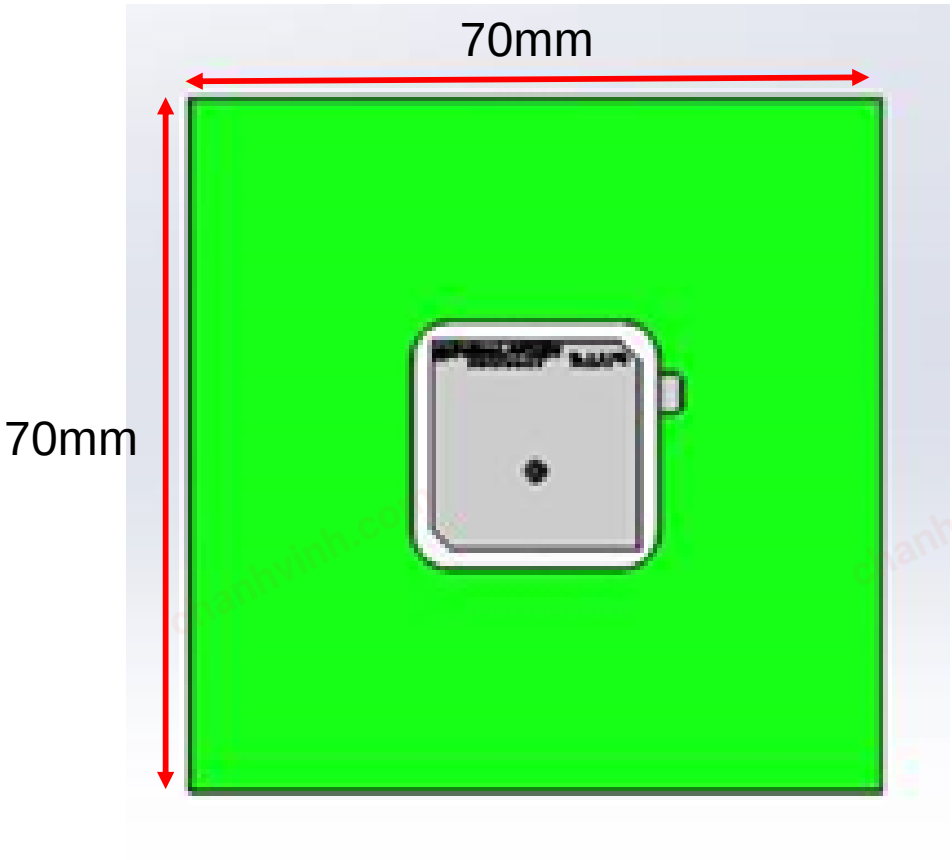

Test on 70*70mm metal ground plane in free space.

In the effort to improve our products, we reserve the right to make changes judged to be necessary.
CONFIDENTIAL AND PROPRIETARY INFORMATION
This document contains confidential and proprietary information of Pulse Electronics, Inc. (Pulse) and is protected by copyright, trade secret and other state and federal laws. Its receipt or possession does not convey any rights to reproduce, disclose its contents, or to manufacture, use or sell anything it may describe. Reproduction, disclosure or use without specific written authorization of Pulse is strictly forbidden.

RoHS COMPLIANT

chanhvinh.com

Pulse | LARSEN Antennas
A YAGEO Company

TECHNICAL DATA SHEET

Description: 2.4-2.5GHz RHCP 25x25x4mm 6.5dBic patch antenna

Series: Ceramic Patch Antenna

PART NUMBER: W3229

CHARTS

Return Loss

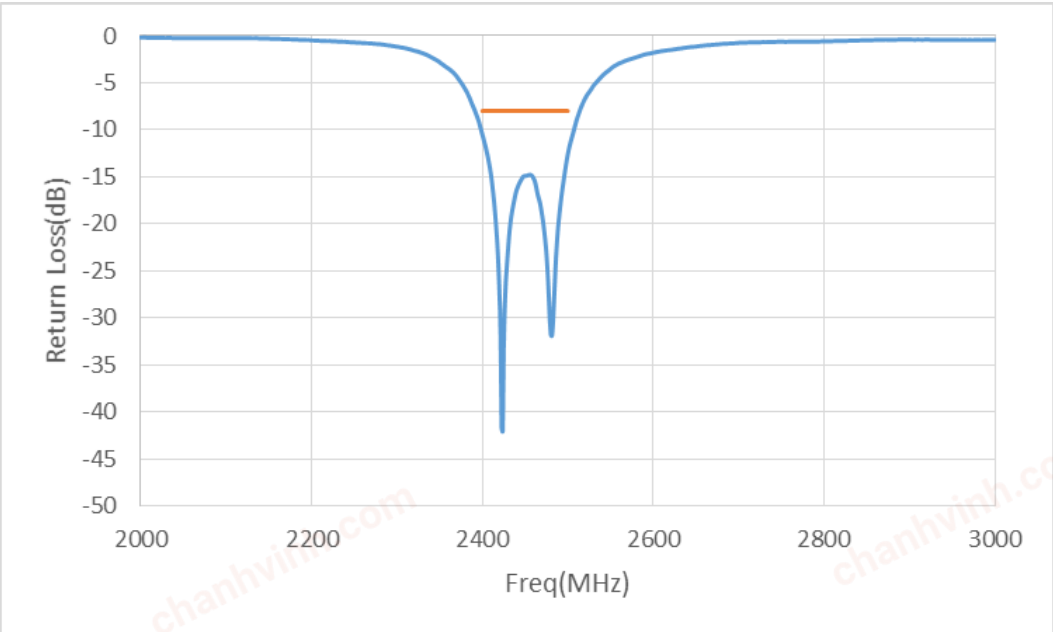

Efficiency(%)

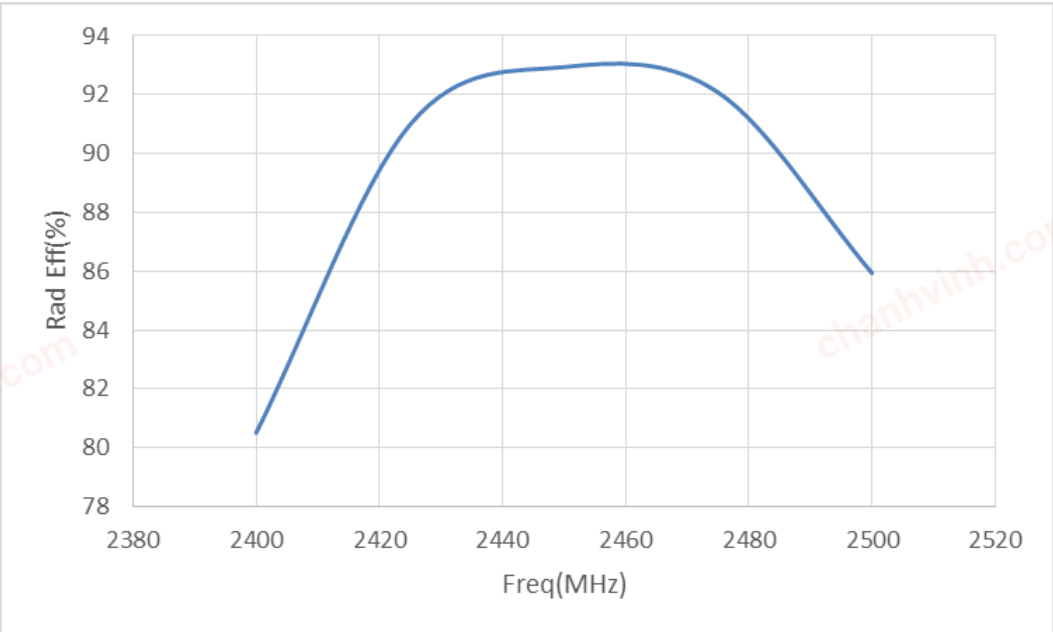

Issue: 1910

In the effort to improve our products, we reserve the right to make changes judged to be necessary.
CONFIDENTIAL AND PROPRIETARY INFORMATION
This document contains confidential and proprietary information of Pulse Electronics, Inc. (Pulse) and is protected by copyright, trade secret and other state and federal laws. Its receipt or possession does not convey any rights to reproduce, disclose its contents, or to manufacture, use or sell anything it may describe. Reproduction, disclosure or use without specific written authorization of Pulse is strictly forbidden.

RoHS COMPLIANT

chanhvinh.com

Pulse | LARSEN Antennas
A YAGEO Company

TECHNICAL DATA SHEET

Description: 2.4-2.5GHz RHCP 25x25x4mm 6.5dBic patch antenna

Series: Ceramic Patch Antenna

PART NUMBER: W3229

CHARTS

Peak Gain(dBic)

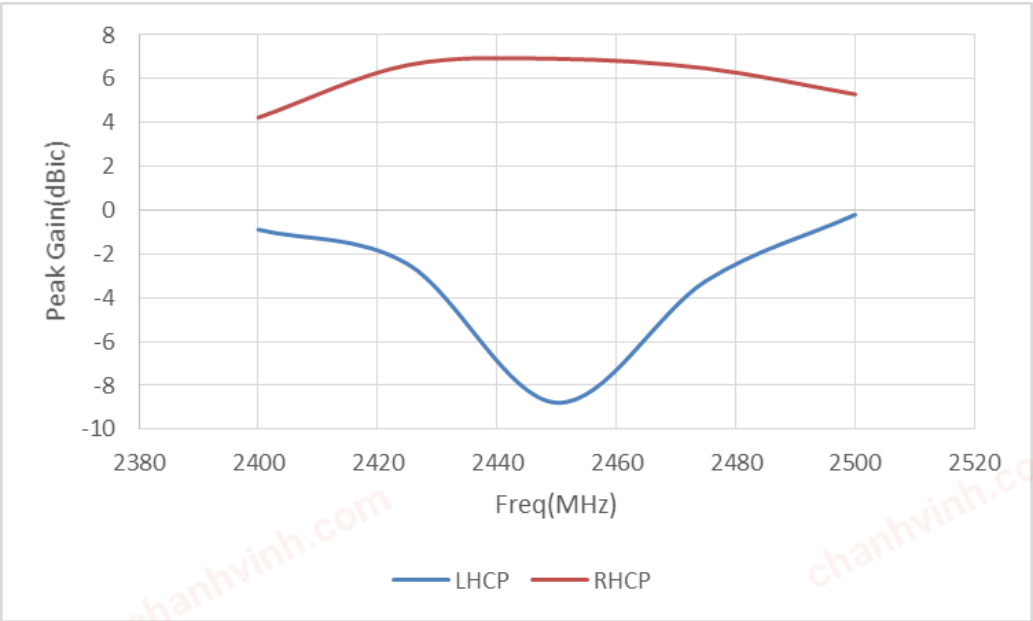

Axial Ratio(dB)

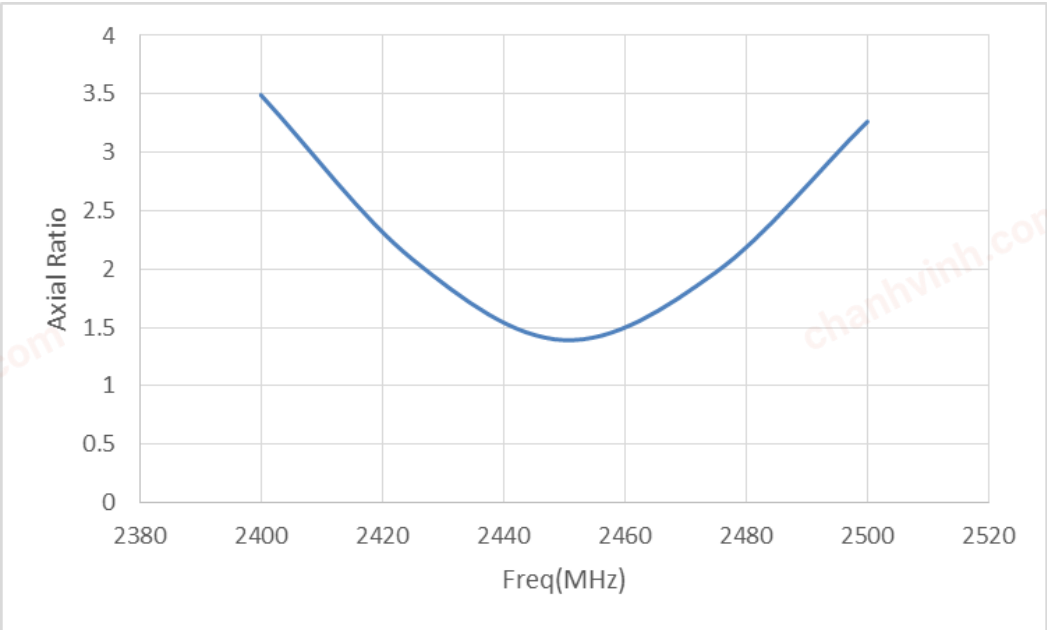

In the effort to improve our products, we reserve the right to make changes judged to be necessary.
CONFIDENTIAL AND PROPRIETARY INFORMATION
This document contains confidential and proprietary information of Pulse Electronics, Inc. (Pulse) and is protected by copyright, trade secret and other state and federal laws. Its receipt or possession does not convey any rights to reproduce, disclose its contents, or to manufacture, use or sell anything it may describe. Reproduction, disclosure or use without specific written authorization of Pulse is strictly forbidden.

RoHS COMPLIANT

chanhvinh.com

Pulse | LARSEN Antennas
A YAGEO Company

TECHNICAL DATA SHEET

Description: 2.4-2.5GHz RHCP 25x25x4mm 6.5dBic patch antenna

Series: Ceramic Patch Antenna

PART NUMBER: W3229

CHARTS

Radiation Pattern (2450MHz)

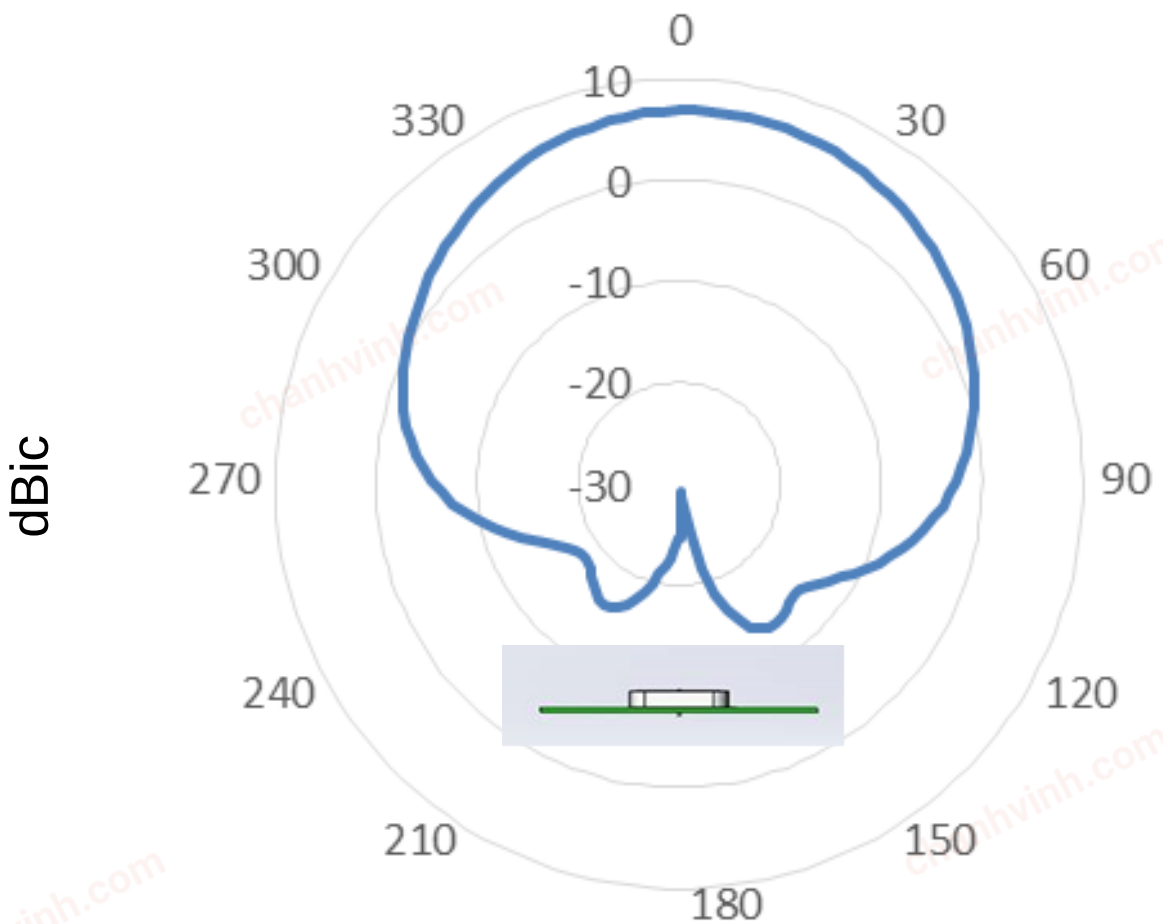

In the effort to improve our products, we reserve the right to make changes judged to be necessary.
CONFIDENTIAL AND PROPRIETARY INFORMATION
This document contains confidential and proprietary information of Pulse Electronics, Inc. (Pulse) and is protected by copyright, trade secret and other state and federal laws. Its receipt or possession does not convey any rights to reproduce, disclose its contents, or to manufacture, use or sell anything it may describe. Reproduction, disclosure or use without specific written authorization of Pulse is strictly forbidden.

RoHS COMPLIANT

chanhvinh.com

Description: 2.4-2.5GHz RHCP 25x25x4mm 6.5dBic patch antenna

Series: Ceramic Patch Antenna

PART NUMBER: W3229

PACKAGING

40pcs antennas per tray

15pcs trays per box

Outside box size : 285mm*375mm*200mm

600pcs antennas per outside box

In the effort to improve our products, we reserve the right to make changes judged to be necessary.
CONFIDENTIAL AND PROPRIETARY INFORMATION
This document contains confidential and proprietary information of Pulse Electronics, Inc. (Pulse) and is protected by copyright, trade secret and other state and federal laws. Its receipt or possession does not convey any rights to reproduce, disclose its contents, or to manufacture, use or sell anything it may describe. Reproduction, disclosure or use without specific written authorization of Pulse is strictly forbidden.