chanhvinh.com

Pulse | LARSEN Antennas
A YAGEO Company

TECHNICAL DATA SHEET

**Description**: CERAMIC PATCH ANTENNA,25x25x4mm GNSS PIN MOUNT

**Series: Patch Antenna**

**PART NUMBER: W3228**




## Features:

- 1621MHz Patch antenna
- RHCP Polarization
- Zenith Gain +4dBiC
- High Efficiency 84%
- Size 25 x 25 x 4 mm
- Pin mount with adhesive tape
- Tray packing

## Applications:

- Satellite receivers
- Tracking, Navigation, Satellite Positioning
- Fleet management
- Asset tracking

All dimensions are in mm / inches

Issue: 1909

RoHS COMPLIANT

In the effort to improve our products, we reserve the right to make changes judged to be necessary.
CONFIDENTIAL AND PROPRIETARY INFORMATION
This document contains confidential and proprietary information of Pulse Electronics, Inc. (Pulse) and is protected by copyright, trade secret and other state and federal laws. Its receipt or possession does not convey any rights to reproduce, disclose its contents, or to manufacture, use or sell anything it may describe. Reproduction, disclosure or use without specific written authorization of Pulse is strictly forbidden.

For more information:

Pulse Worldwide Headquarters
15255 Innovation Drive #100
San Diego, CA 92128
USA
Tel:1-858-674-8100

Pulse/Larsen Antennas
18110 SE 34th St Bldg 2 Suite 250
Vancouver, WA 98683
USA
Tel: 1-360-944-7551

Europe Headquarters
Pulse GmbH & Do, KG
Zeppelinstrasse 15
Herrenberg, Germany
Tel: 49 7032 7806 0

Pulse (Suzhou) Wireless Products Co, Inc.
99 Huo Ju Road(#29 Bldg,4th Phase
Suzhou New District
Jiangsu Province, Suzhou 215009 PR China
Tel: 86 512 6807 9998

chanhvinh.com

Pulse | LARSEN Antennas
A YAGEO Company

TECHNICAL DATA SHEET

**Description**: CERAMIC PATCH ANTENNA,25x25x4mm GNSS PIN MOUNT

**Series: Patch Antenna**

**PART NUMBER: W3228**

## ELECTRICAL SPECIFICATIONS

| | |
|---|---|
| Frequency | 1621±4 MHz |
| Nominal Impedance | 50 Ω |
| Return Loss* | <-15 dB |
| RHCP Gain (typical)* | 4 dBic |
| Zenith Axial Ratio(typical)* | 2.1 dB @1621MHz |
| Polarization: | RHCP |

## MECHANICAL SPECIFICATIONS

| | |
|---|---|
| Overall Length | 25x25x4mm |
| Weight | 9.7g |

## ENVIRONMENTAL SPECIFICATIONS

| | |
|---|---|
| Operating Temperature | -40~+85 ℃ |
| Storage Temperature | -40~+85 ℃ |
| RoHS Compliant | Yes |

* Test the antenna on 60mmX60mm metal plane

Issue: 1909

In the effort to improve our products, we reserve the right to make changes judged to be necessary.
CONFIDENTIAL AND PROPRIETARY INFORMATION
This document contains confidential and proprietary information of Pulse Electronics, Inc. (Pulse) and is protected by copyright, trade secret and other state and federal laws. Its receipt or possession does not convey any rights to reproduce, disclose its contents, or to manufacture, use or sell anything it may describe. Reproduction, disclosure or use without specific written authorization of Pulse is strictly forbidden.

RoHS COMPLIANT

chanhvinh.com

Pulse | LARSEN Antennas
A YAGEO Company

TECHNICAL DATA SHEET

**Description**: CERAMIC PATCH ANTENNA,25x25x4mm GNSS PIN MOUNT

**Series: Patch Antenna**

**PART NUMBER: W3228**

## MECHANICAL DRAWING

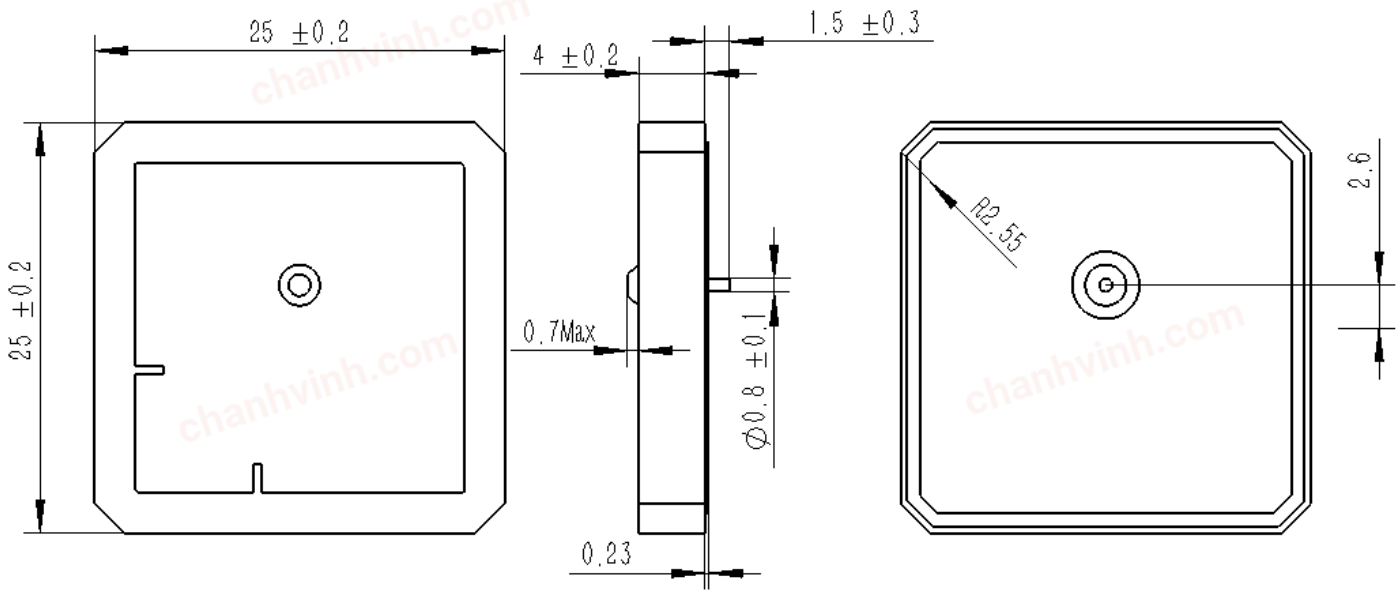


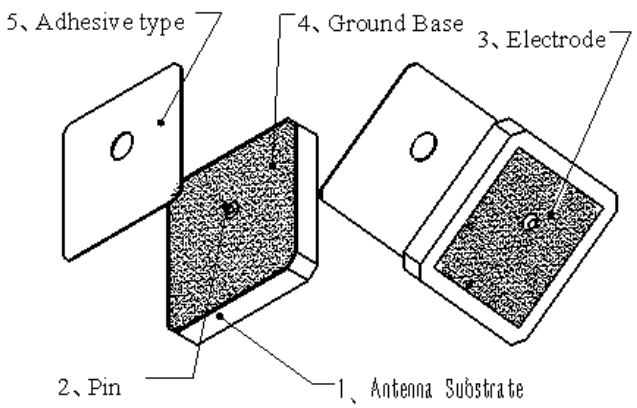


Scale: 1:1

| NO. | Description | Structure and material |
|---|---|---|
| 1 | Antenna Substrate | Dielectric Ceramics |
| 2 | Pin | Copper and tinplated |
| 3 | Electrode | Ag Plated |
| 4 | Ground Base | Ag Plated |
| 5 | Adhesive type | NITTO 5000NS |



In the effort to improve our products, we reserve the right to make changes judged to be necessary.
CONFIDENTIAL AND PROPRIETARY INFORMATION
This document contains confidential and proprietary information of Pulse Electronics, Inc. (Pulse) and is protected by copyright, trade secret and other state and federal laws. Its receipt or possession does not convey any rights to reproduce, disclose its contents, or to manufacture, use or sell anything it may describe. Reproduction, disclosure or use without specific written authorization of Pulse is strictly forbidden.

RoHS COMPLIANT

chanhvinh.com

Pulse | LARSEN Antennas
A YAGEO Company

TECHNICAL DATA SHEET

**Description**: CERAMIC PATCH ANTENNA,25x25x4mm GNSS PIN MOUNT

**Series: Patch Antenna**

**PART NUMBER: W3228**

## CHARTS

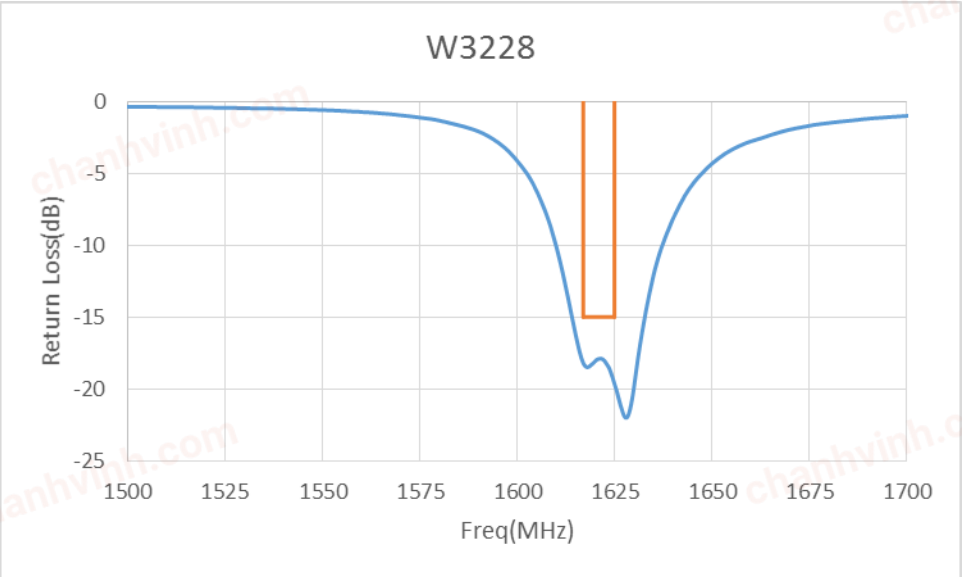


Return Loss*

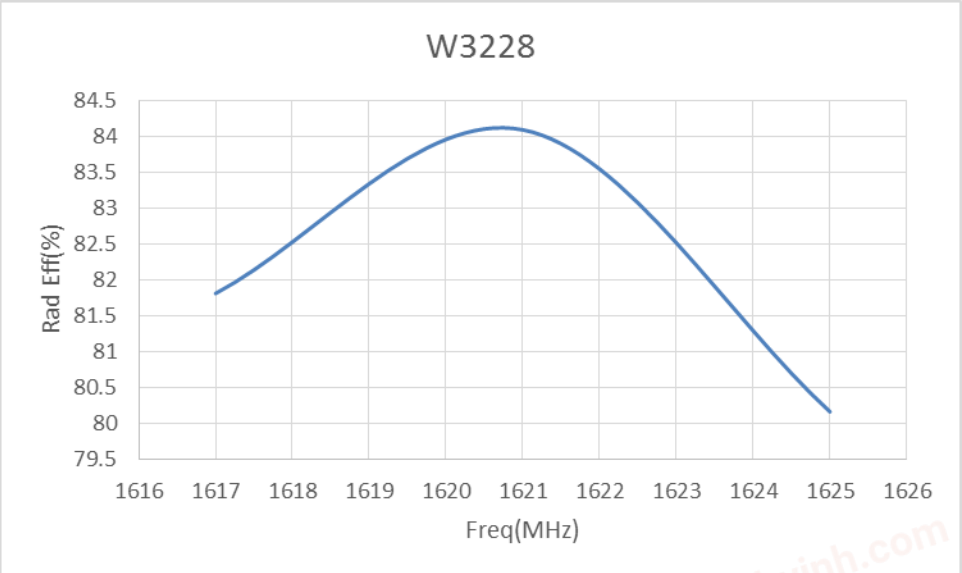


Zenith total Radiation Efficiency

* Test the antenna on 60mmX60mm metal plane

Issue: 1909



In the effort to improve our products, we reserve the right to make changes judged to be necessary.
CONFIDENTIAL AND PROPRIETARY INFORMATION
This document contains confidential and proprietary information of Pulse Electronics, Inc. (Pulse) and is protected by copyright, trade secret and other state and federal laws. Its receipt or possession does not convey any rights to reproduce, disclose its contents, or to manufacture, use or sell anything it may describe. Reproduction, disclosure or use without specific written authorization of Pulse is strictly forbidden.

chanhvinh.com

Pulse | LARSEN Antennas
A YAGEO Company

TECHNICAL DATA SHEET

**Description**: CERAMIC PATCH ANTENNA,25x25x4mm GNSS PIN MOUNT

**Series: Patch Antenna**

**PART NUMBER: W3228**

## CHARTS

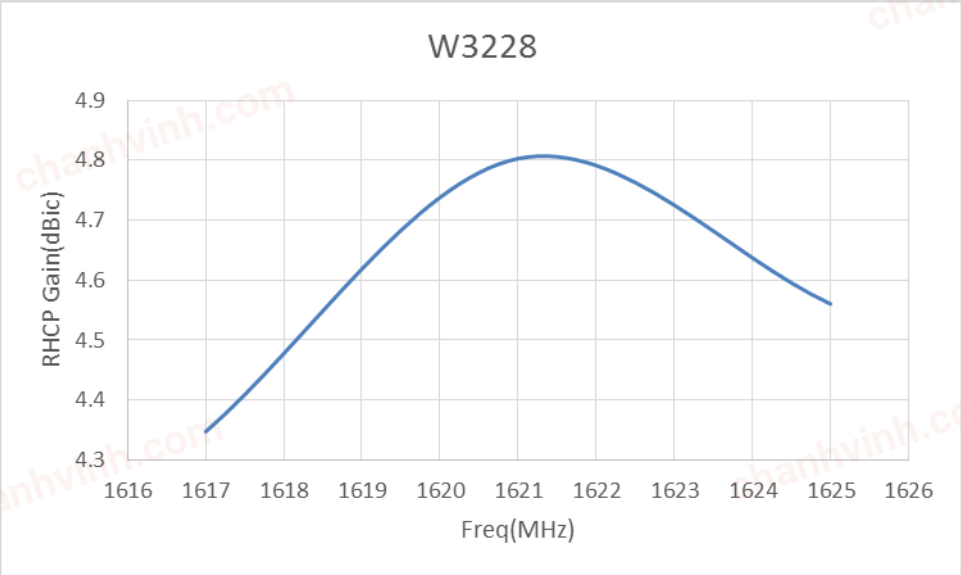


Zenith RHCP Gain*

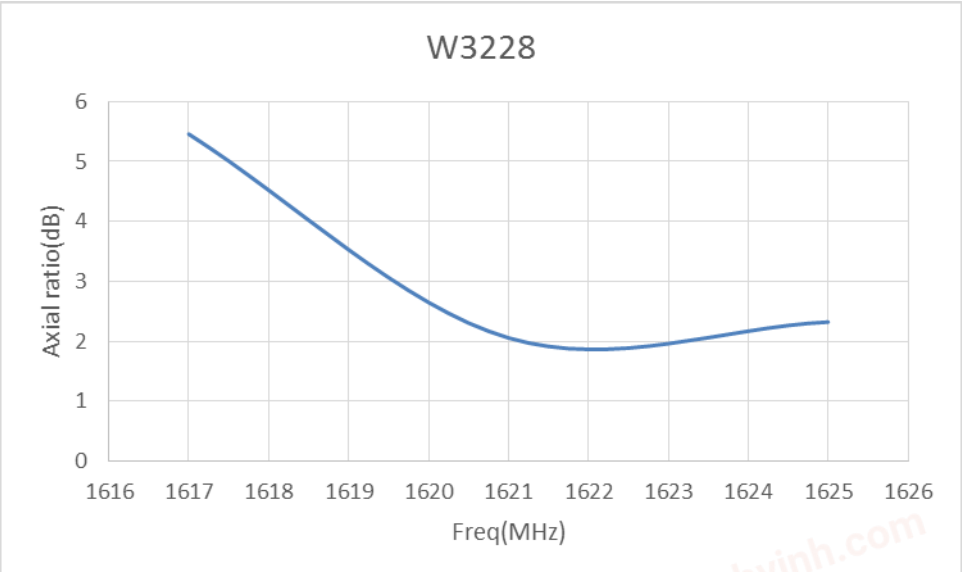


Zenith Axial Ratio*

* Test the antenna on 60mmX60mm metal plane

Issue: 1909

In the effort to improve our products, we reserve the right to make changes judged to be necessary.
CONFIDENTIAL AND PROPRIETARY INFORMATION
This document contains confidential and proprietary information of Pulse Electronics, Inc. (Pulse) and is protected by copyright, trade secret and other state and federal laws. Its receipt or possession does not convey any rights to reproduce, disclose its contents, or to manufacture, use or sell anything it may describe. Reproduction, disclosure or use without specific written authorization of Pulse is strictly forbidden.

RoHS COMPLIANT

chanhvinh.com

Pulse | LARSEN Antennas
A YAGEO Company

TECHNICAL DATA SHEET

**Description**: CERAMIC PATCH ANTENNA,25x25x4mm GNSS PIN MOUNT

**Series: Patch Antenna**

**PART NUMBER: W3228**

## CHARTS

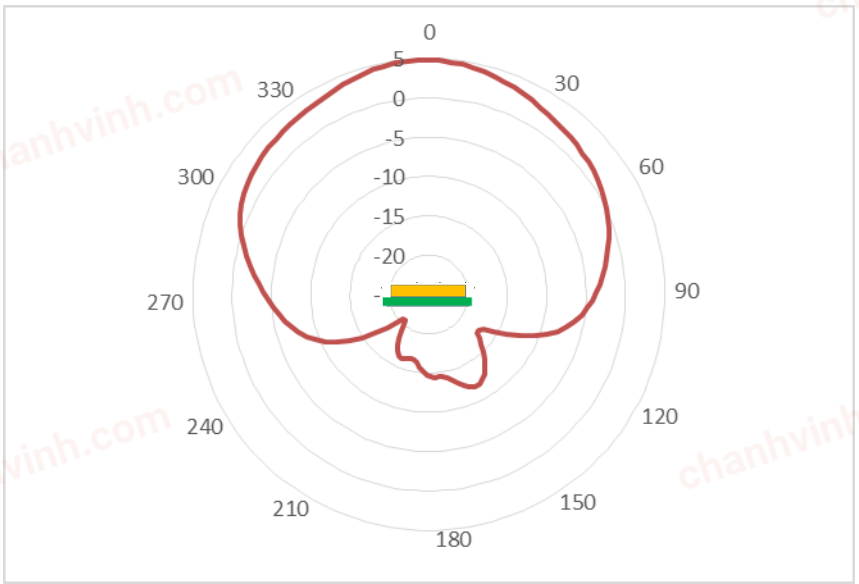


Radiation pattern on 60mmX60mm metal plane


In the effort to improve our products, we reserve the right to make changes judged to be necessary.
CONFIDENTIAL AND PROPRIETARY INFORMATION
This document contains confidential and proprietary information of Pulse Electronics, Inc. (Pulse) and is protected by copyright, trade secret and other state and federal laws. Its receipt or possession does not convey any rights to reproduce, disclose its contents, or to manufacture, use or sell anything it may describe. Reproduction, disclosure or use without specific written authorization of Pulse is strictly forbidden.

RoHS COMPLIANT

chanhvinh.com

Pulse | LARSEN Antennas
A YAGEO Company

TECHNICAL DATA SHEET

**Description**: CERAMIC PATCH ANTENNA,25x25x4mm GNSS PIN MOUNT

**Series: Patch Antenna**

**PART NUMBER: W3228**

## PACKAGING

Tray packing
50PCS/Tray
2 Tray / vacuum bag
2 vacuum bag /small carton box
2 small carton box/ big box
Total: 400PCS/big carton box
Big box dimensions (MM)：460x235x140


In the effort to improve our products, we reserve the right to make changes judged to be necessary.
CONFIDENTIAL AND PROPRIETARY INFORMATION
This document contains confidential and proprietary information of Pulse Electronics, Inc. (Pulse) and is protected by copyright, trade secret and other state and federal laws. Its receipt or possession does not convey any rights to reproduce, disclose its contents, or to manufacture, use or sell anything it may describe. Reproduction, disclosure or use without specific written authorization of Pulse is strictly forbidden.

RoHS COMPLIANT