chanhvinh.com

Pulse
a YAGEO company

TECHNICAL DATA SHEET

**Description: 902-928MHz Ceramic On Ground Antenna**

**Series: Chip Antenna**

**PART NUMBER: W3211**

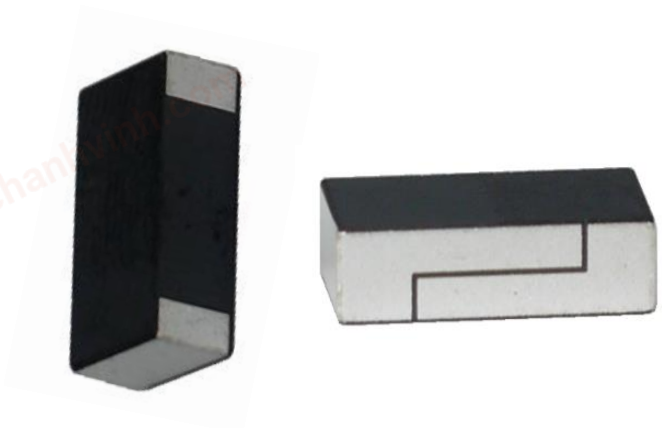

## Features:

- Frequency: 902-928MHz
- Size: 10 x 3.2 x 5 mm
- Gain: 1.35 dBi
- Type: On Ground
- SMD Compatible
- RoHS Compliant
- MSL level 1

## Applications:

- ISM 915MHz radios
- Sensors
- IoT
- Transportation
- Industry automation

All dimensions are in mm / inches

Issue: 2049

RoHS COMPLIANT

In the effort to improve our products, we reserve the right to make changes judged to be necessary.
CONFIDENTIAL AND PROPRIETARY INFORMATION
This document contains confidential and proprietary information of Pulse Electronics, Inc. (Pulse) and is protected by copyright, trade secret and other state and federal laws. Its receipt or possession does not convey any rights to reproduce, disclose its contents, or to manufacture, use or sell anything it may describe. Reproduction, disclosure or use without specific written authorization of Pulse is strictly forbidden.

For more information:

Pulse Worldwide Headquarters
15255 Innovation Drive #100
San Diego, CA 92128
USA
Tel:1-858-674-8100

Pulse/Larsen Antennas
18110 SE 34th St Bldg 2 Suite 250
Vancouver, WA 98683
USA
Tel: 1-360-944-7551

Europe Headquarters
Pulse GmbH & Do, KG
Zeppelinstrasse 15
Herrenberg, Germany
Tel: 49 7032 7806 0

Pulse (Suzhou) Wireless Products Co, Inc.
99 Huo Ju Road(#29 Bldg,4th Phase
Suzhou New District
Jiangsu Province, Suzhou 215009 PR China
Tel: 86 512 6807 9998

chanhvinh.com

Pulse
a YAGEO company

TECHNICAL DATA SHEET

**Description: 902-928MHz Ceramic On Ground Antenna**

**Series: Chip Antenna**

**PART NUMBER: W3211**

## ELECTRICAL SPECIFICATIONS

| | |
|---|---|
| Frequency | 902-928MHz |
| Nominal Impedance | 50 Ω |
| Return Loss Peak | -10dB |
| Return Loss Band edges | -3dB |
| Radiation Pattern | Omni |
| Peak Gain | 1.35dBi |
| Efficiency | 43% |
| Polarization | Linear |
| Power Withstanding | 5W |

## MECHANICAL SPECIFICATIONS

| | |
|---|---|
| Overall Length | 10x3.2x5mm |
| Weight | 0.73g |
| Antenna Color / Material | Ceramic |

## ENVIRONMENTAL SPECIFICATIONS

| | |
|---|---|
| Operating Temperature | -40~+85° C |
| Storage Temperature | -40~+85° C |
| RoHS Compliant | Yes |


In the effort to improve our products, we reserve the right to make changes judged to be necessary.
CONFIDENTIAL AND PROPRIETARY INFORMATION
This document contains confidential and proprietary information of Pulse Electronics, Inc. (Pulse) and is protected by copyright, trade secret and other state and federal laws. Its receipt or possession does not convey any rights to reproduce, disclose its contents, or to manufacture, use or sell anything it may describe. Reproduction, disclosure or use without specific written authorization of Pulse is strictly forbidden.

RoHS COMPLIANT

chanhvinh.com

Pulse
a YAGEO company

TECHNICAL DATA SHEET

**Description: 902-928MHz Ceramic On Ground Antenna**

**Series: Chip Antenna**

**PART NUMBER: W3211**

## MECHANICAL DRAWING

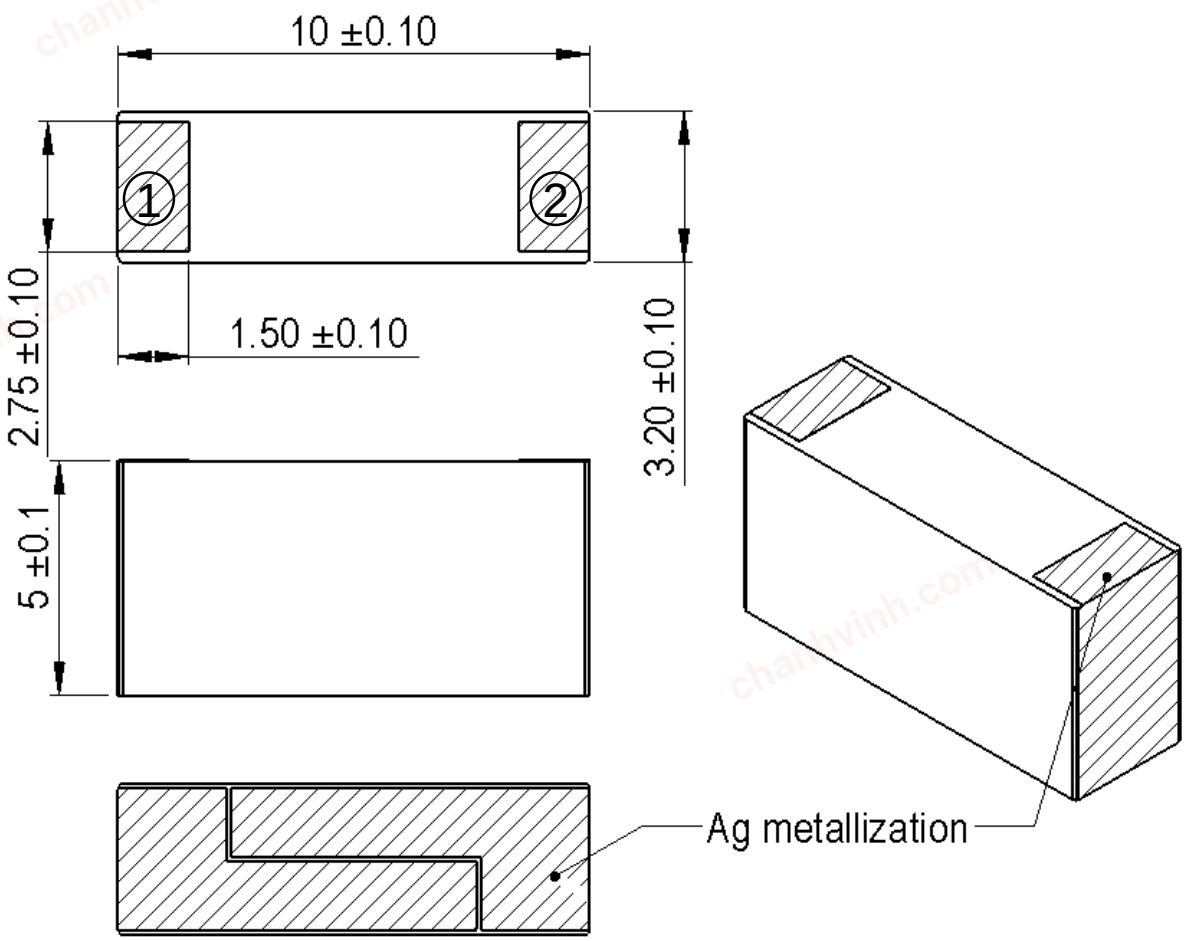


| No. | Terminal Name | Terminal Dimensions |
|---|---|---|
| 1 | Feed / GND | 1.5 x 2.75 mm |
| 2 | Feed / GND | 1.5 x 2.75 mm |
| Antenna is symmetrical. Either of terminals 1 or 2 can be Feed / GND | | |


In the effort to improve our products, we reserve the right to make changes judged to be necessary.
CONFIDENTIAL AND PROPRIETARY INFORMATION
This document contains confidential and proprietary information of Pulse Electronics, Inc. (Pulse) and is protected by copyright, trade secret and other state and federal laws. Its receipt or possession does not convey any rights to reproduce, disclose its contents, or to manufacture, use or sell anything it may describe. Reproduction, disclosure or use without specific written authorization of Pulse is strictly forbidden.

RoHS COMPLIANT

chanhvinh.com

Pulse
a YAGEO company

TECHNICAL DATA SHEET

**Description**: 902-928MHz Ceramic On Ground Antenna

**Series:** Chip Antenna

**PART NUMBER: W3211**

## MECHANICAL DRAWING AND TERMINAL CONFIGURATION

***Ground cleared under antenna TOP and MIDDLE layers, clearance area 10.8 mm x 8.25mm (BOTTOM layer solid ground)***

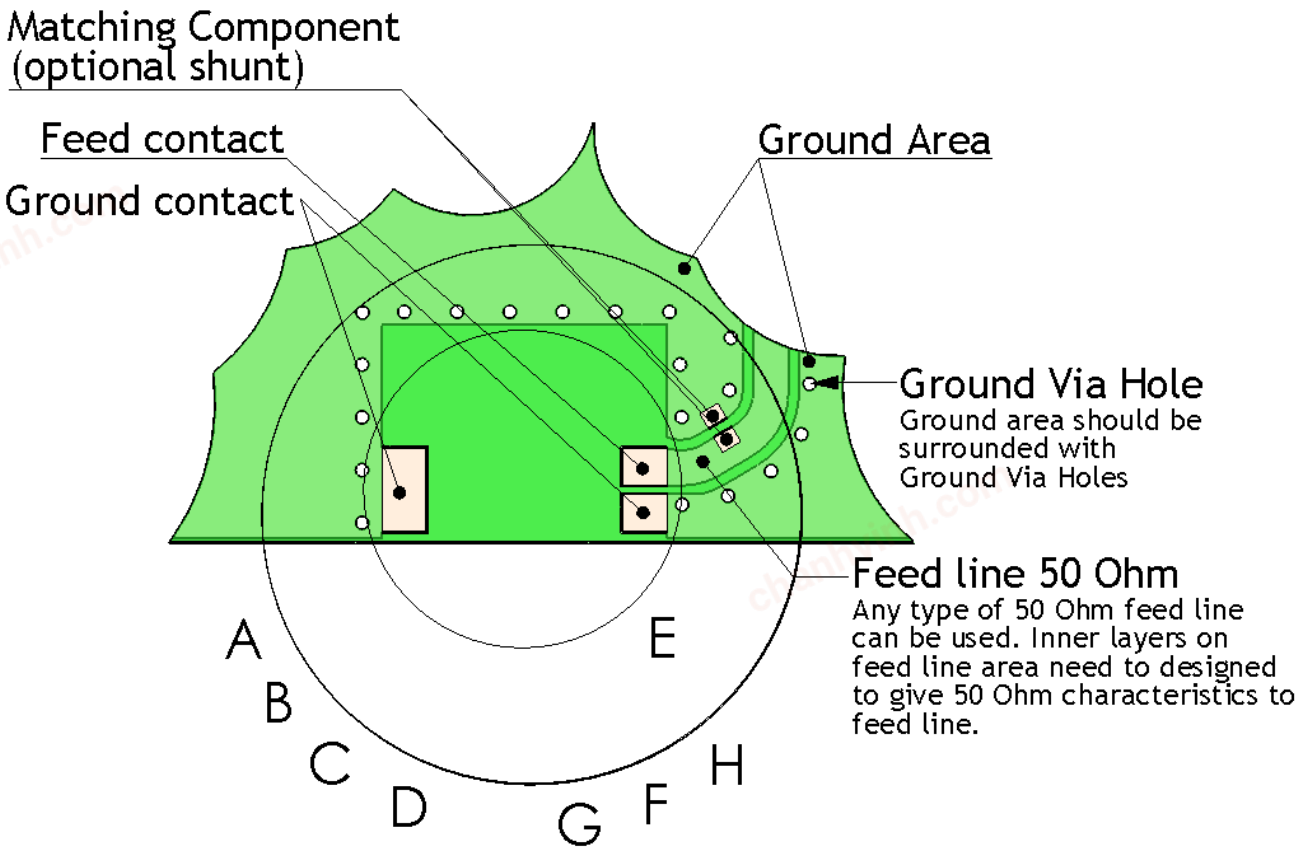


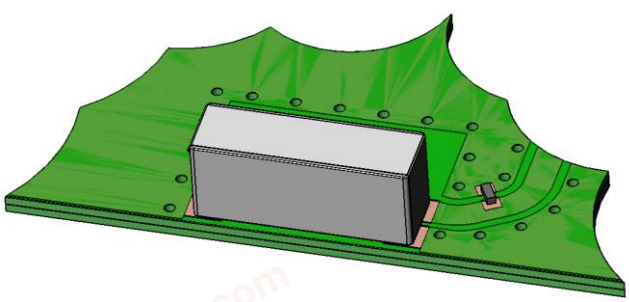



In the effort to improve our products, we reserve the right to make changes judged to be necessary.
CONFIDENTIAL AND PROPRIETARY INFORMATION
This document contains confidential and proprietary information of Pulse Electronics, Inc. (Pulse) and is protected by copyright, trade secret and other state and federal laws. Its receipt or possession does not convey any rights to reproduce, disclose its contents, or to manufacture, use or sell anything it may describe. Reproduction, disclosure or use without specific written authorization of Pulse is strictly forbidden.

RoHS COMPLIANT

chanhvinh.com

Pulse
a YAGEO company

TECHNICAL DATA SHEET

**Description**: 902-928MHz Ceramic On Ground Antenna

**Series:** Chip Antenna

**PART NUMBER: W3211**

## MECHANICAL DRAWING AND TERMINAL CONFIGURATION

***Recommended Antenna Pad Dimensions on PCB Layout (top surface)***
***Ground cleared under antenna on top and inner layers,***
***clearance area 10.8 mm x 8.25 mm***

Ground clearance area (10.80 x 8.25 mm)

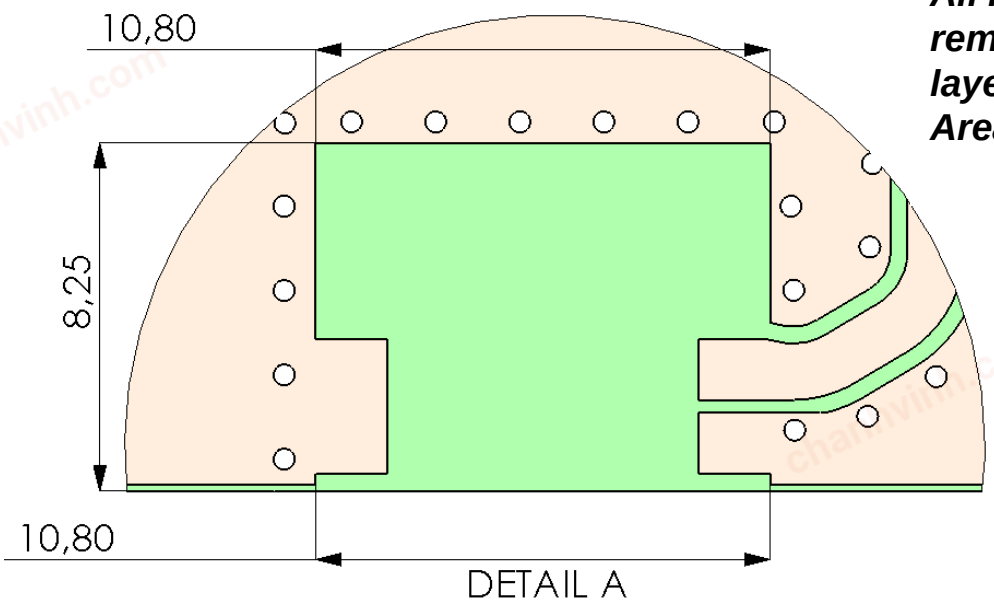


***All metallization must be removed from top and inner layers, clearance Area ( 10.8 x 8.25 mm )***

**Bottom solid ground layer**

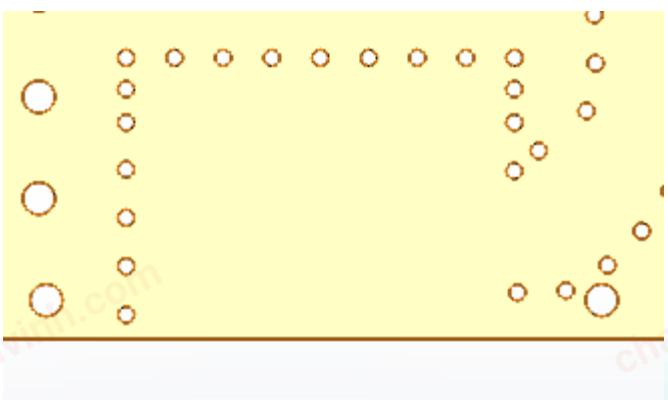


In the effort to improve our products, we reserve the right to make changes judged to be necessary.
CONFIDENTIAL AND PROPRIETARY INFORMATION
This document contains confidential and proprietary information of Pulse Electronics, Inc. (Pulse) and is protected by copyright, trade secret and other state and federal laws. Its receipt or possession does not convey any rights to reproduce, disclose its contents, or to manufacture, use or sell anything it may describe. Reproduction, disclosure or use without specific written authorization of Pulse is strictly forbidden.

RoHS COMPLIANT

chanhvinh.com

Pulse
a YAGEO company

TECHNICAL DATA SHEET

**Description**: 902-928MHz Ceramic On Ground Antenna

**Series:** Chip Antenna

**PART NUMBER: W3211**

## MECHANICAL DRAWING AND TERMINAL CONFIGURATION

*Recommended Antenna Pad Dimensions on PWB Layout (top surface)*

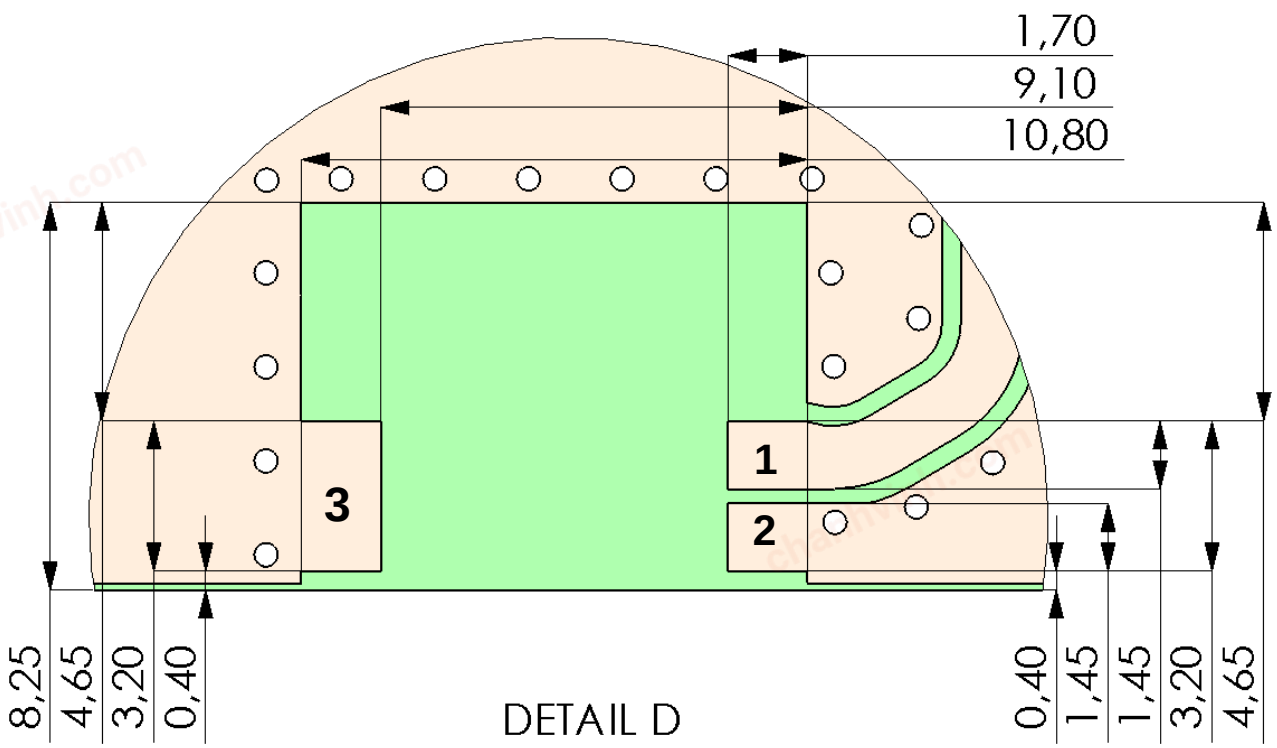


| PCB contact pads | | |
|---|---|---|
| No. | Terminal Name | Terminal Dimensions |
| 1 | Feed | 1.70 x 1.45 mm |
| 2 | GND | 1.70 x 1.45 mm |
| 3 | GND | 1.70 x 3.20 mm |



In the effort to improve our products, we reserve the right to make changes judged to be necessary.
CONFIDENTIAL AND PROPRIETARY INFORMATION
This document contains confidential and proprietary information of Pulse Electronics, Inc. (Pulse) and is protected by copyright, trade secret and other state and federal laws. Its receipt or possession does not convey any rights to reproduce, disclose its contents, or to manufacture, use or sell anything it may describe. Reproduction, disclosure or use without specific written authorization of Pulse is strictly forbidden.

RoHS COMPLIANT

chanhvinh.com

Pulse
a YAGEO company

TECHNICAL DATA SHEET

**Series:** Chip Antenna

**Description:** 902-928MHz Ceramic On Ground Antenna

**PART NUMBER: W3211**

## MECHANICAL DRAWING AND TERMINAL CONFIGURATION

*Recommended test board layout for electrical characteristic measurement, test board outline size 120 x 37mm*

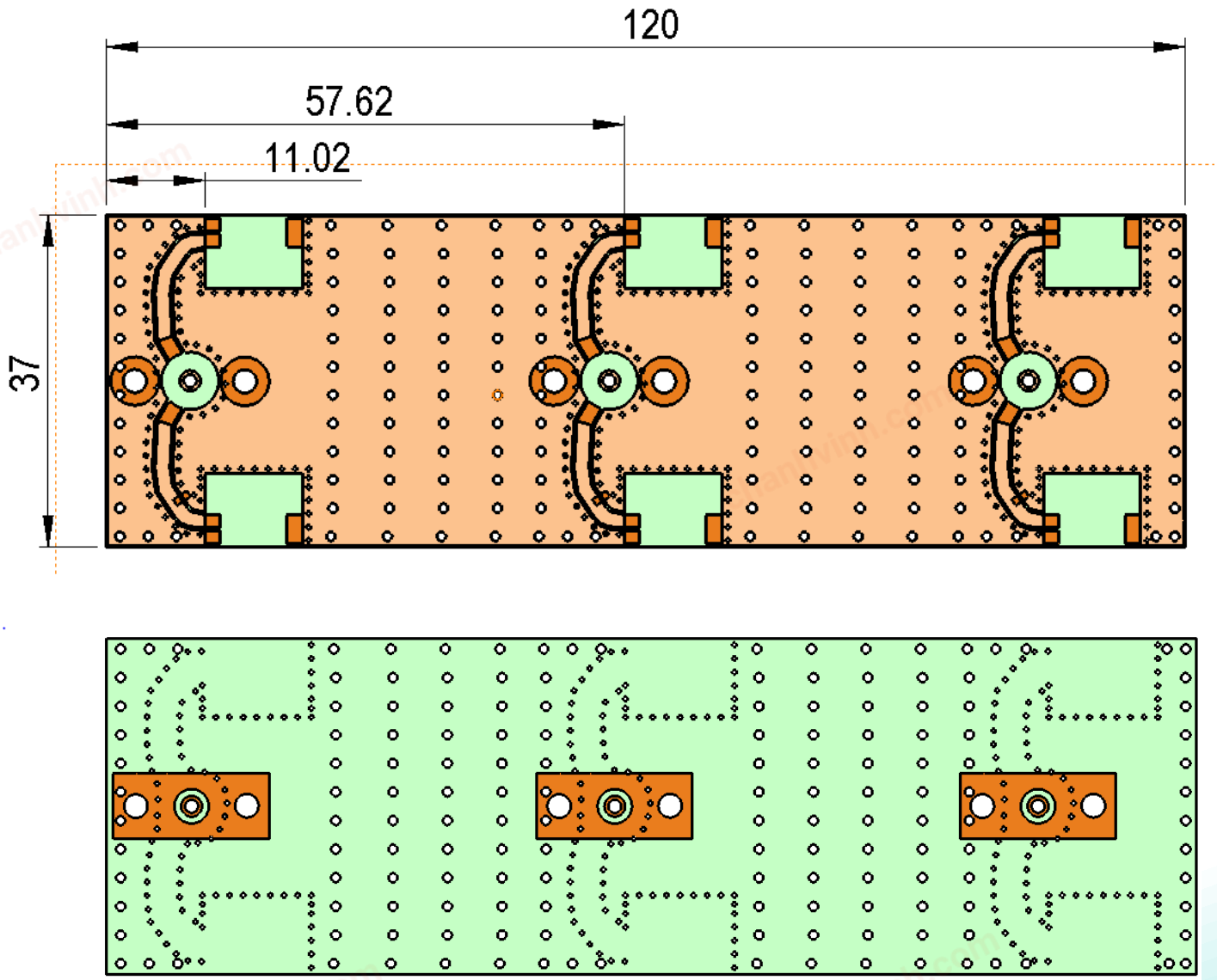




In the effort to improve our products, we reserve the right to make changes judged to be necessary.
CONFIDENTIAL AND PROPRIETARY INFORMATION
This document contains confidential and proprietary information of Pulse Electronics, Inc. (Pulse) and is protected by copyright, trade secret and other state and federal laws. Its receipt or possession does not convey any rights to reproduce, disclose its contents, or to manufacture, use or sell anything it may describe. Reproduction, disclosure or use without specific written authorization of Pulse is strictly forbidden.

RoHS COMPLIANT

chanhvinh.com

Pulse
a YAGEO company

TECHNICAL DATA SHEET

**Description: 902-928MHz Ceramic On Ground Antenna**

**Series: Chip Antenna**

**PART NUMBER: W3211**

## CHARTS

Measured on the 120x37mm test board with matching circuit, 10pF shunt capacitor, position center location of test board edge.

Ground cleared under antenna, clearance area 10.80 mm x 8.25 mm top and middle layers.

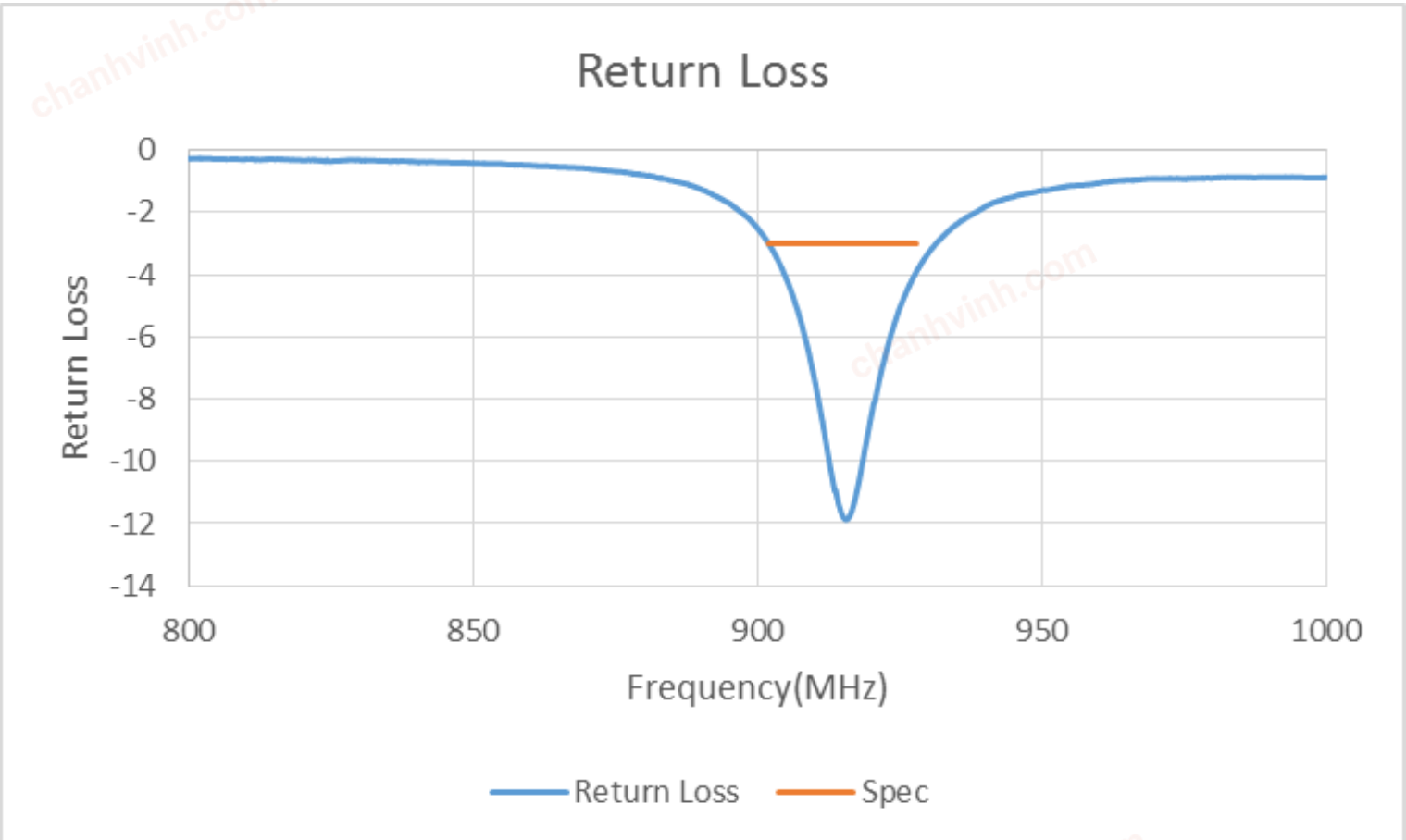




In the effort to improve our products, we reserve the right to make changes judged to be necessary.
CONFIDENTIAL AND PROPRIETARY INFORMATION
This document contains confidential and proprietary information of Pulse Electronics, Inc. (Pulse) and is protected by copyright, trade secret and other state and federal laws. Its receipt or possession does not convey any rights to reproduce, disclose its contents, or to manufacture, use or sell anything it may describe. Reproduction, disclosure or use without specific written authorization of Pulse is strictly forbidden.

RoHS COMPLIANT

chanhvinh.com

Pulse
a YAGEO company

TECHNICAL DATA SHEET

**Description**: 902-928MHz Ceramic On Ground Antenna

**Series:** Chip Antenna

**PART NUMBER: W3211**

## CHARTS

Measured on the 120x37mm test board with matching circuit, 10pF shunt capacitor, position center location of test board edge.

Ground cleared under antenna, clearance area 10.80 mm x 8.25 mm top and middle layers.

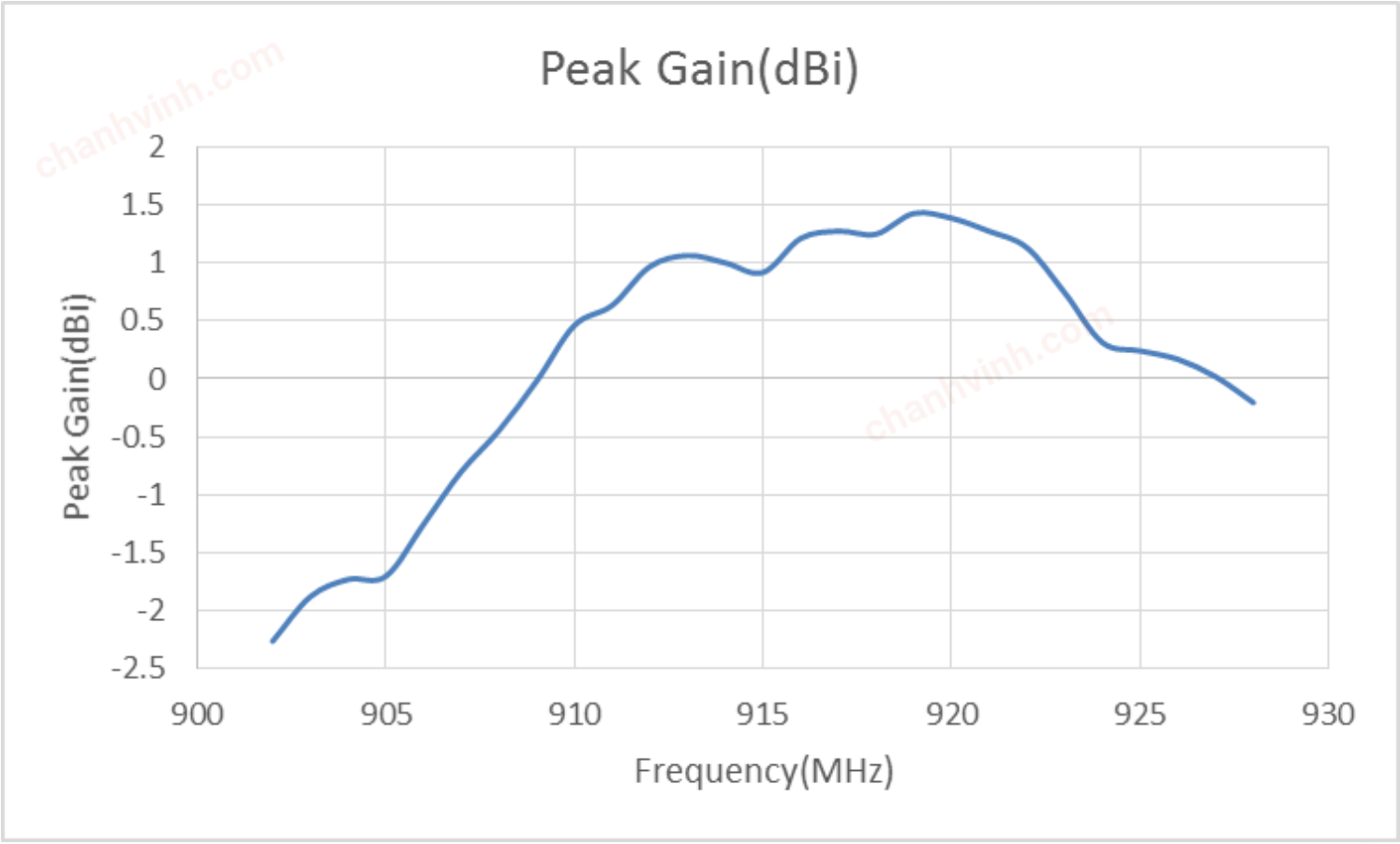




In the effort to improve our products, we reserve the right to make changes judged to be necessary.
CONFIDENTIAL AND PROPRIETARY INFORMATION
This document contains confidential and proprietary information of Pulse Electronics, Inc. (Pulse) and is protected by copyright, trade secret and other state and federal laws. Its receipt or possession does not convey any rights to reproduce, disclose its contents, or to manufacture, use or sell anything it may describe. Reproduction, disclosure or use without specific written authorization of Pulse is strictly forbidden.

RoHS COMPLIANT

chanhvinh.com

Pulse
a YAGEO company

TECHNICAL DATA SHEET

**Description**: 902-928MHz Ceramic On Ground Antenna

**Series:** Chip Antenna

**PART NUMBER: W3211**

## CHARTS

Measured on the 120x37mm test board with matching circuit, 10pF shunt capacitor, position center location of test board edge.

Ground cleared under antenna, clearance area 10.80 mm x 8.25 mm top and middle layers.

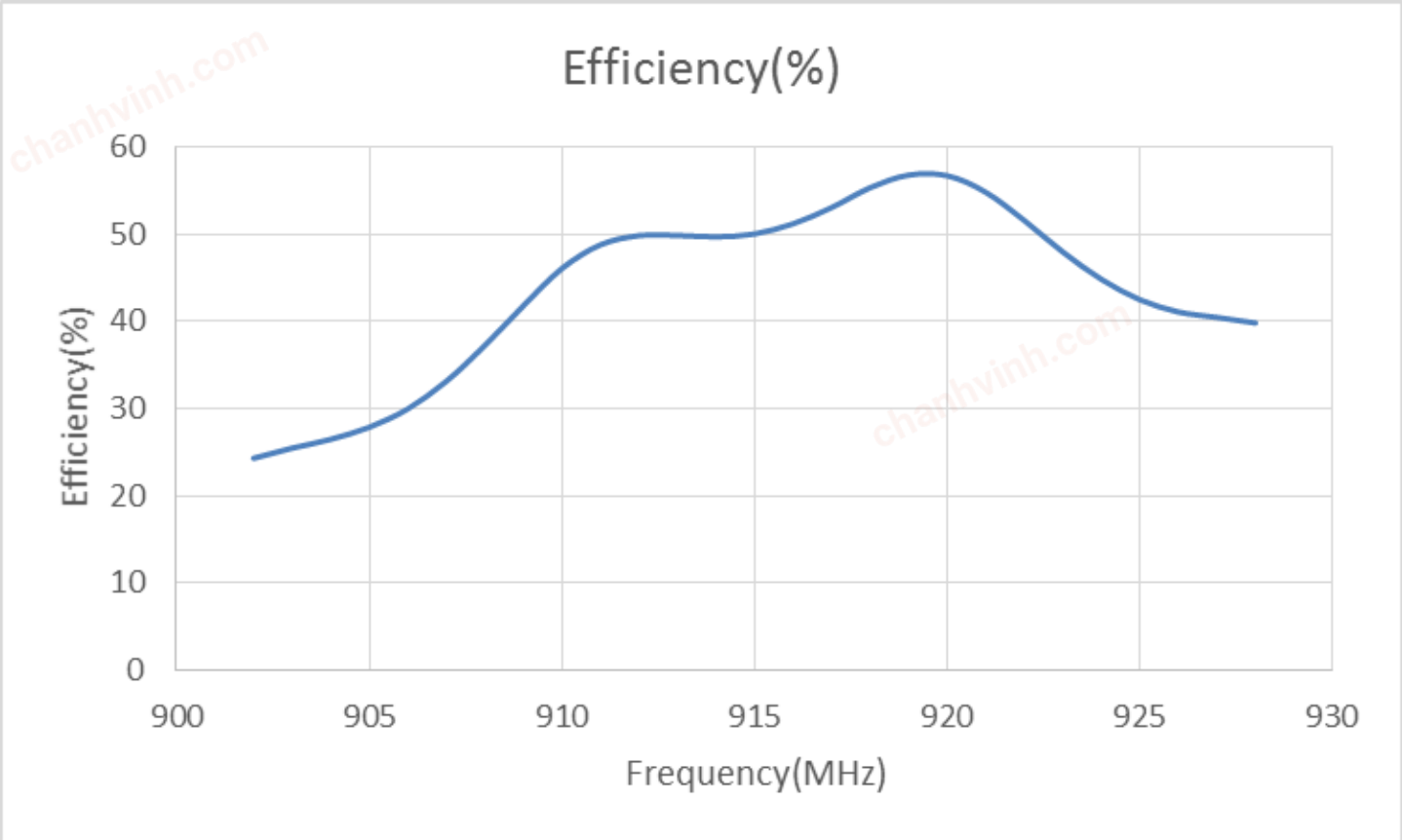



In the effort to improve our products, we reserve the right to make changes judged to be necessary.
CONFIDENTIAL AND PROPRIETARY INFORMATION
This document contains confidential and proprietary information of Pulse Electronics, Inc. (Pulse) and is protected by copyright, trade secret and other state and federal laws. Its receipt or possession does not convey any rights to reproduce, disclose its contents, or to manufacture, use or sell anything it may describe. Reproduction, disclosure or use without specific written authorization of Pulse is strictly forbidden.

RoHS COMPLIANT

chanhvinh.com

Pulse
a YAGEO company

TECHNICAL DATA SHEET

**Description: 902-928MHz Ceramic On Ground Antenna**

**Series: Chip Antenna**

**PART NUMBER: W3211**

## CHARTS

Measured on the 120x37mm test board with matching circuit, 10pF shunt capacitor, position center location of test board edge.

Ground cleared under antenna, clearance area 10.80 mm x 8.25 mm top and middle layers.

### Radiation Pattern

**XY Plane**

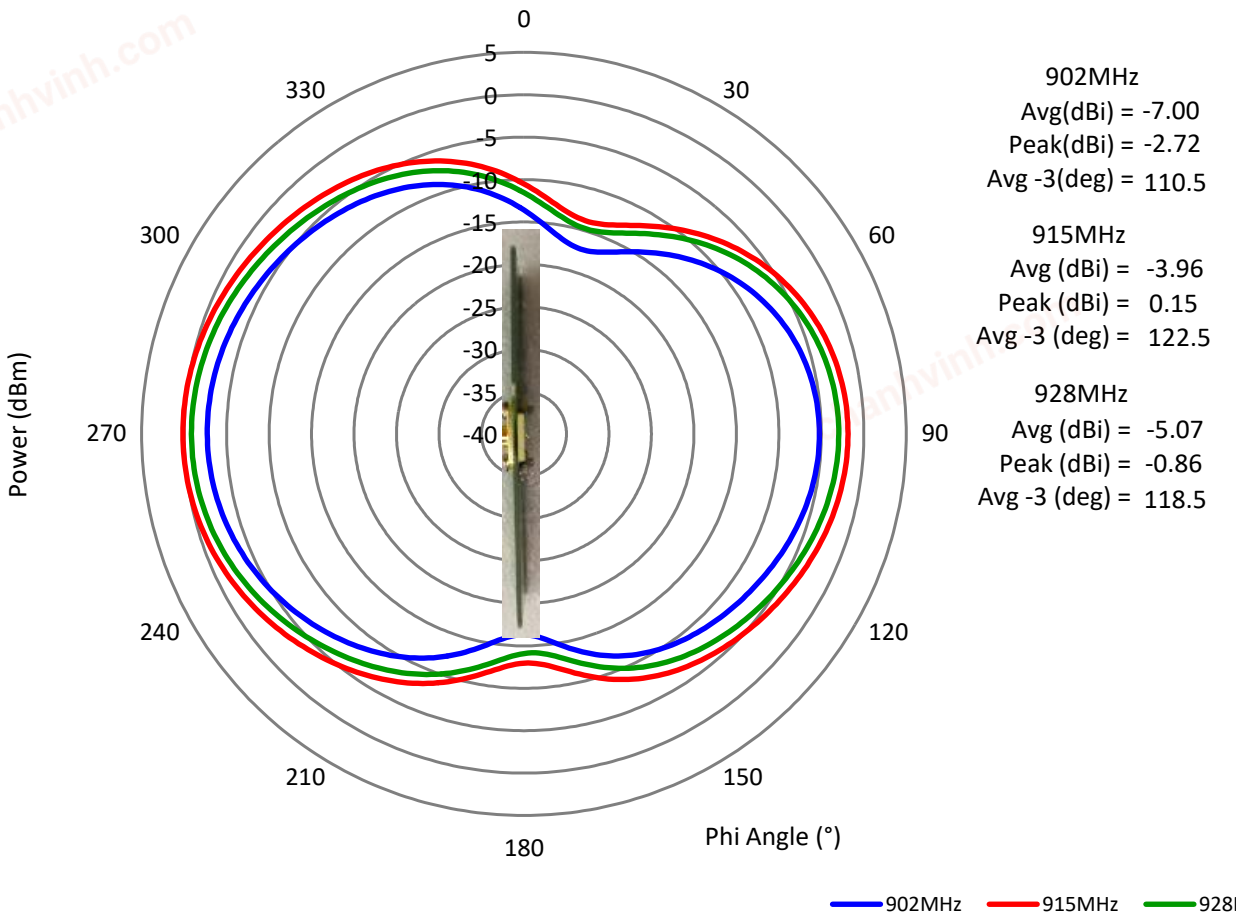


902MHz
Avg(dBi) = -7.00
Peak(dBi) = -2.72
Avg -3(deg) = 110.5

915MHz
Avg (dBi) = -3.96
Peak (dBi) = 0.15
Avg -3 (deg) = 122.5

928MHz
Avg (dBi) = -5.07
Peak (dBi) = -0.86
Avg -3 (deg) = 118.5



In the effort to improve our products, we reserve the right to make changes judged to be necessary.
CONFIDENTIAL AND PROPRIETARY INFORMATION
This document contains confidential and proprietary information of Pulse Electronics, Inc. (Pulse) and is protected by copyright, trade secret and other state and federal laws. Its receipt or possession does not convey any rights to reproduce, disclose its contents, or to manufacture, use or sell anything it may describe. Reproduction, disclosure or use without specific written authorization of Pulse is strictly forbidden.

RoHS COMPLIANT

chanhvinh.com

Pulse
a YAGEO company

TECHNICAL DATA SHEET

**Description: 902-928MHz Ceramic On Ground Antenna**

**Series: Chip Antenna**

**PART NUMBER: W3211**

## CHARTS

Measured on the 120x37mm test board with matching circuit, 10pF shunt capacitor, position center location of test board edge.

Ground cleared under antenna, clearance area 10.80 mm x 8.25 mm top and middle layers.

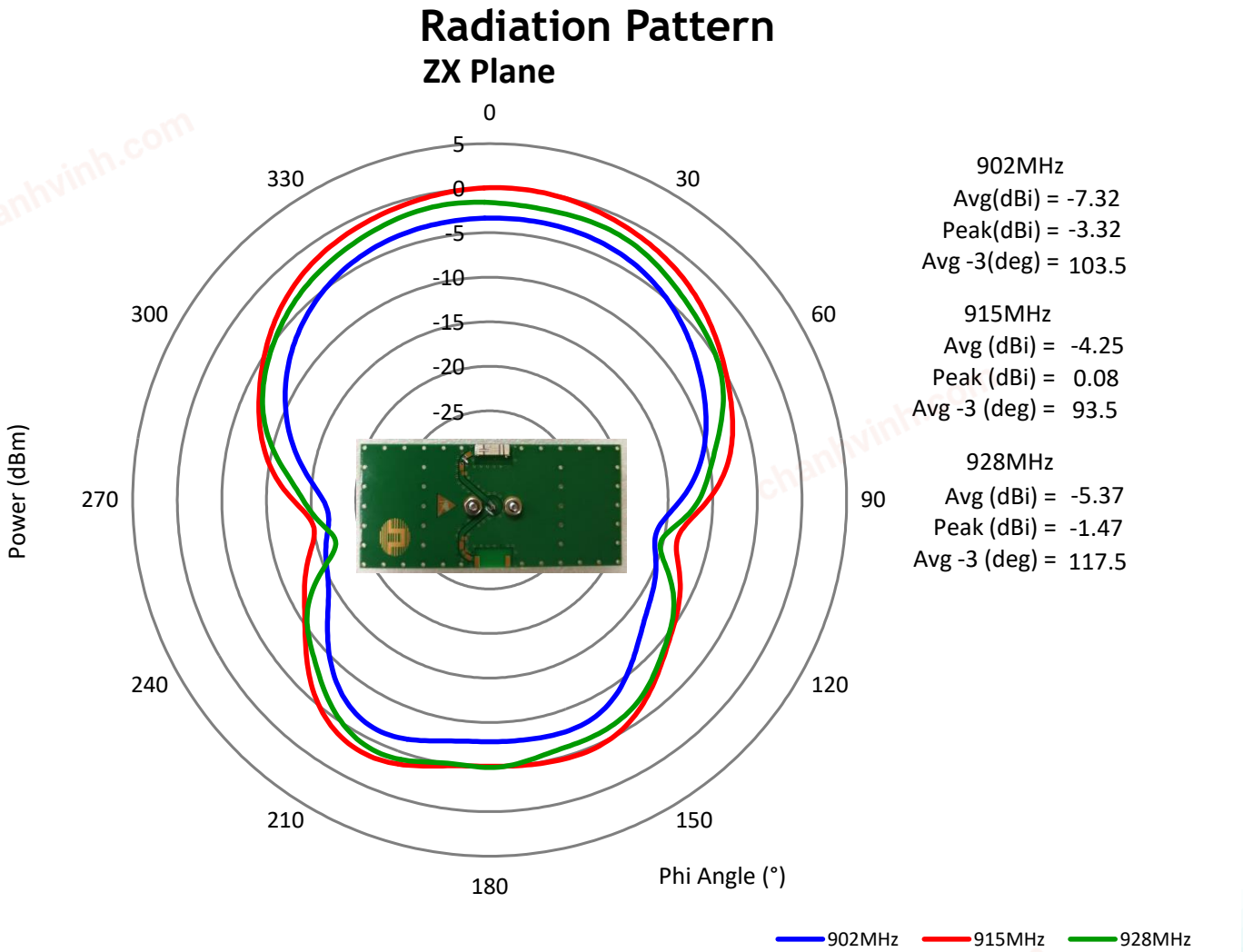




In the effort to improve our products, we reserve the right to make changes judged to be necessary.
CONFIDENTIAL AND PROPRIETARY INFORMATION
This document contains confidential and proprietary information of Pulse Electronics, Inc. (Pulse) and is protected by copyright, trade secret and other state and federal laws. Its receipt or possession does not convey any rights to reproduce, disclose its contents, or to manufacture, use or sell anything it may describe. Reproduction, disclosure or use without specific written authorization of Pulse is strictly forbidden.

RoHS COMPLIANT

chanhvinh.com

Pulse
a YAGEO company

TECHNICAL DATA SHEET

**Description: 902-928MHz Ceramic On Ground Antenna**

**Series: Chip Antenna**

**PART NUMBER: W3211**

## CHARTS

Measured on the 120x37mm test board with matching circuit, 10pF shunt capacitor, position center location of test board edge.

Ground cleared under antenna, clearance area 10.80 mm x 8.25 mm top and middle layers.

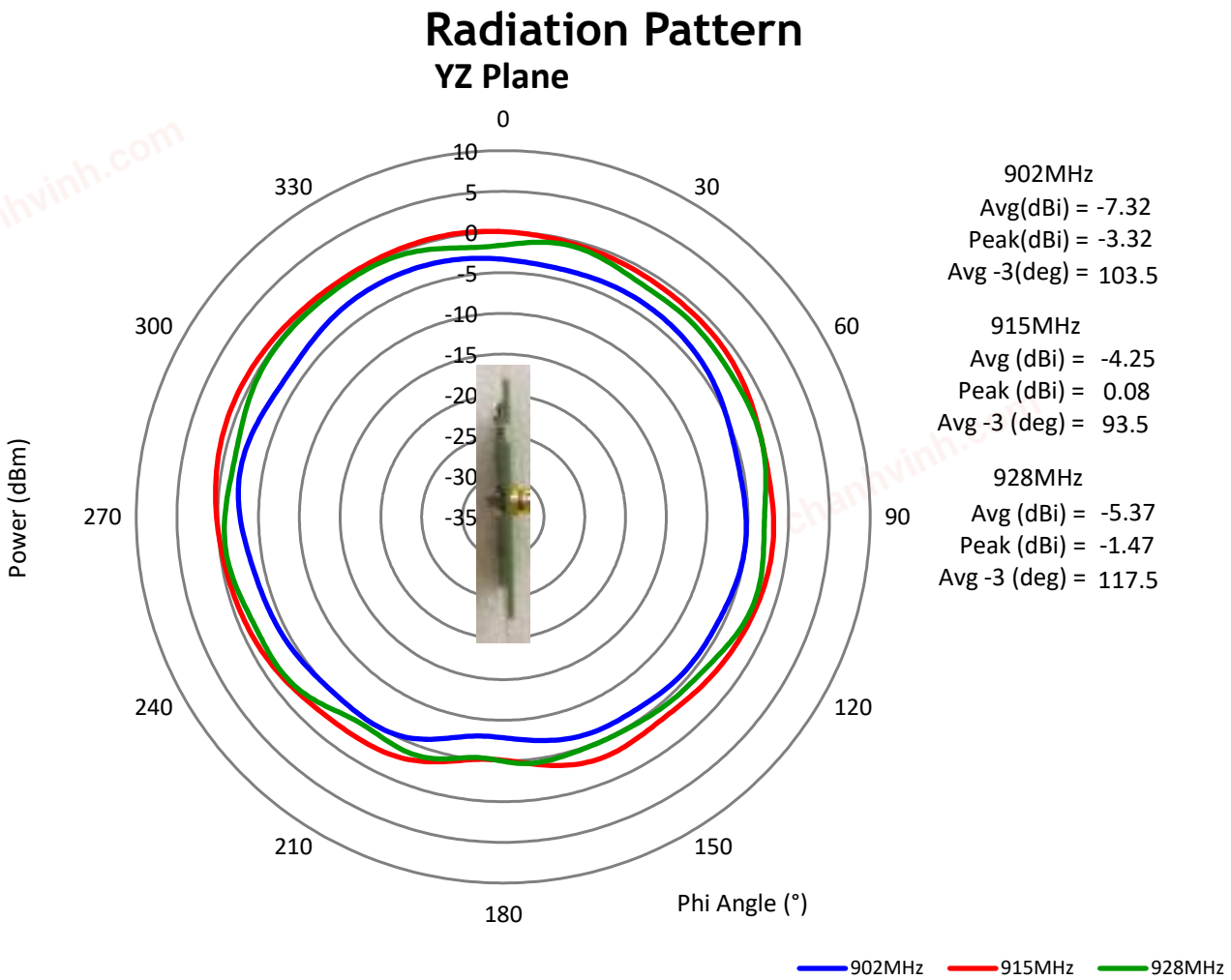




In the effort to improve our products, we reserve the right to make changes judged to be necessary.
CONFIDENTIAL AND PROPRIETARY INFORMATION
This document contains confidential and proprietary information of Pulse Electronics, Inc. (Pulse) and is protected by copyright, trade secret and other state and federal laws. Its receipt or possession does not convey any rights to reproduce, disclose its contents, or to manufacture, use or sell anything it may describe. Reproduction, disclosure or use without specific written authorization of Pulse is strictly forbidden.

RoHS COMPLIANT

chanhvinh.com

Pulse
a YAGEO company

TECHNICAL DATA SHEET

**Series: Chip Antenna**

**Description: 902-928MHz Ceramic On Ground Antenna**

**PART NUMBER: W3211**

## PACKAGING

350pcs antennas per 7” reel

3pcs 7” reel per inner package box

2pcs inner box per out box

Total 2100pcs antenna per out box

Out box size:  390mmx215mmx165mm

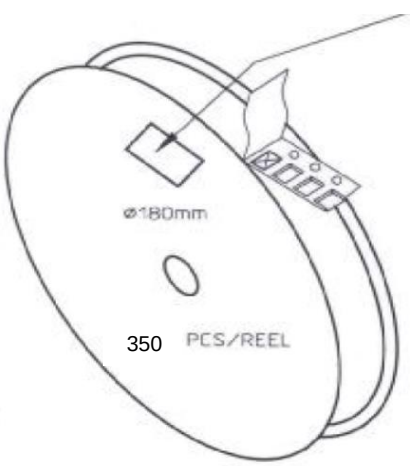


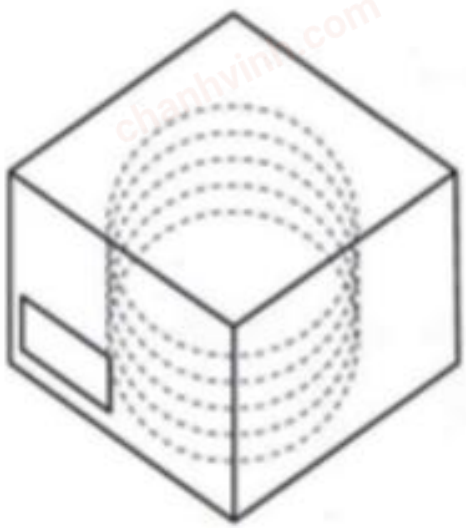


In the effort to improve our products, we reserve the right to make changes judged to be necessary.
CONFIDENTIAL AND PROPRIETARY INFORMATION
This document contains confidential and proprietary information of Pulse Electronics, Inc. (Pulse) and is protected by copyright, trade secret and other state and federal laws. Its receipt or possession does not convey any rights to reproduce, disclose its contents, or to manufacture, use or sell anything it may describe. Reproduction, disclosure or use without specific written authorization of Pulse is strictly forbidden.

RoHS COMPLIANT