chanhvinh.com

Pulse
a YAGEO company

**Series:** Embedded NFC

TECHNICAL DATA SHEET

**Description**: 13.56MHz RFID/NFC SMD Antenna

**PART NUMBER: W3102**




## Features:

- Antenna type coil on ferrite core
- Frequency 13.56MHz
- Inductance 4.7uH
- Read Distance 17mm
- Size 7.8 x 7 x 5 mm
- Fully SMD compatible
- RoHS Compliant
- MSL level 3

## Applications:

- RFID / NFC systems
- Pairing, Sharing

All dimensions are in mm / inches

Issue: 2147

RoHS COMPLIANT

In the effort to improve our products, we reserve the right to make changes judged to be necessary.
CONFIDENTIAL AND PROPRIETARY INFORMATION
This document contains confidential and proprietary information of Pulse Electronics, Inc. (Pulse) and is protected by copyright, trade secret and other state and federal laws. Its receipt or possession does not convey any rights to reproduce, disclose its contents, or to manufacture, use or sell anything it may describe. Reproduction, disclosure or use without specific written authorization of Pulse is strictly forbidden.

For more information:

Pulse Worldwide Headquarters
15255 Innovation Drive #100
San Diego, CA 92128
USA
Tel:1-858-674-8100

Pulse/Larsen Antennas
18110 SE 34th St Bldg 2 Suite 250
Vancouver, WA 98683
USA
Tel: 1-360-944-7551

Europe Headquarters
Pulse GmbH & Do, KG
Zeppelinstrasse 15
Herrenberg, Germany
Tel: 49 7032 7806 0

Pulse (Suzhou) Wireless Products Co, Inc.
99 Huo Ju Road(#29 Bldg,4th Phase
Suzhou New District
Jiangsu Province, Suzhou 215009 PR China
Tel: 86 512 6807 9998

chanhvinh.com

Pulse
a YAGEO company

TECHNICAL DATA SHEET

**Series:** Embedded NFC

**Description**: 13.56MHz RFID/NFC SMD Antenna

**PART NUMBER: W3102**

## ELECTRICAL SPECIFICATIONS

| | |
|---|---|
| Antenna Type | coil |
| Frequency | 13.56 MHz |
| Nominal Impedance | 50 Ω/80Ω |
| parallel capacitance | 3pF |
| self-resonance frequency | 41.8MHz |
| Inductance value at 13.56MHz | 5.32uH |
| resistance | 0.25Ω |
| read distance | 17mm |

## MECHANICAL SPECIFICATIONS

| | |
|---|---|
| Size | 7.8 X 7.0 X 5.0 mm |
| Weight | 0.83 g |
| Antenna Material | Core: 7.8 X 5.0(SH)DR B3.0<br>DR7.8 X 5.0 B3.0<br>Wire: 2UEW |

## ENVIRONMENTAL SPECIFICATIONS

| | |
|---|---|
| Operating Temperature | -40 ~ +125° C |
| Storage Temperature | -20 ~ +80° C |
| RoHS Compliant | Yes |



In the effort to improve our products, we reserve the right to make changes judged to be necessary.
CONFIDENTIAL AND PROPRIETARY INFORMATION
This document contains confidential and proprietary information of Pulse Electronics, Inc. (Pulse) and is protected by copyright, trade secret and other state and federal laws. Its receipt or possession does not convey any rights to reproduce, disclose its contents, or to manufacture, use or sell anything it may describe. Reproduction, disclosure or use without specific written authorization of Pulse is strictly forbidden.

RoHS COMPLIANT

chanhvinh.com

Pulse
a YAGEO company

TECHNICAL DATA SHEET

**Series:** Embedded NFC

**Description**: 13.56MHz RFID/NFC SMD Antenna

**PART NUMBER: W3102**

## MECHANICAL DRAWING

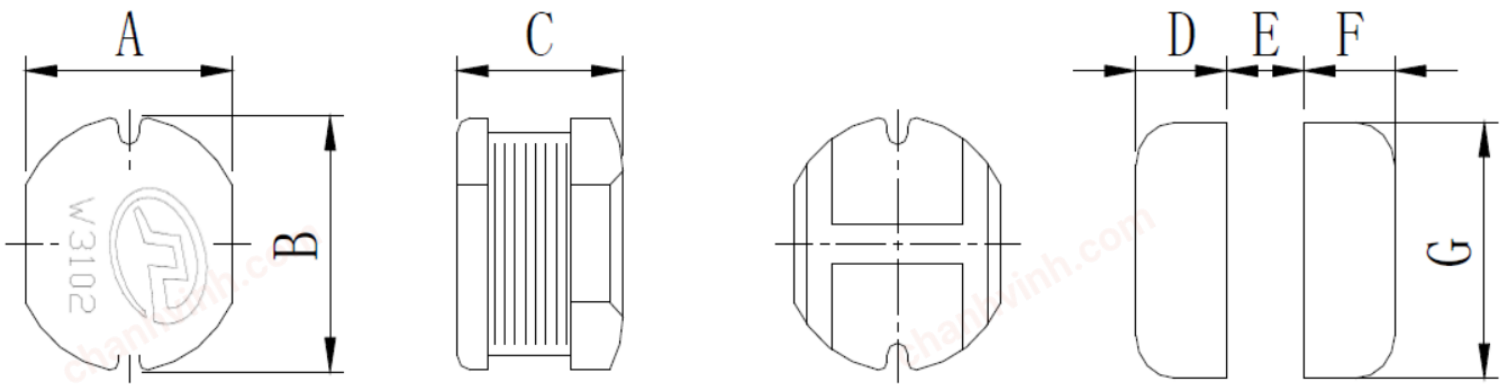


Recommend Solder Dimension

| Dimension | A | B | C | D | E | F | G |
|---|---|---|---|---|---|---|---|
| Unit (mm/in) | 7.0±0.3/0.28±0.01 | 7.8±0.3/0.31±0.01 | 5.0±0.35/0.20±0.01 | 2.5/0.10 Ref | 2.7/0.11 Ref | 2.5/0.10 Ref | 7.5/0.30 Ref |


In the effort to improve our products, we reserve the right to make changes judged to be necessary.
CONFIDENTIAL AND PROPRIETARY INFORMATION
This document contains confidential and proprietary information of Pulse Electronics, Inc. (Pulse) and is protected by copyright, trade secret and other state and federal laws. Its receipt or possession does not convey any rights to reproduce, disclose its contents, or to manufacture, use or sell anything it may describe. Reproduction, disclosure or use without specific written authorization of Pulse is strictly forbidden.

RoHS COMPLIANT

chanhvinh.com

Pulse
a YAGEO company

TECHNICAL DATA SHEET

**Description**: 13.56MHz RFID/NFC SMD Antenna

**Series:** Embedded NFC

**PART NUMBER: W3102**

## Reflow Soldering Temperature Profile Recommendation

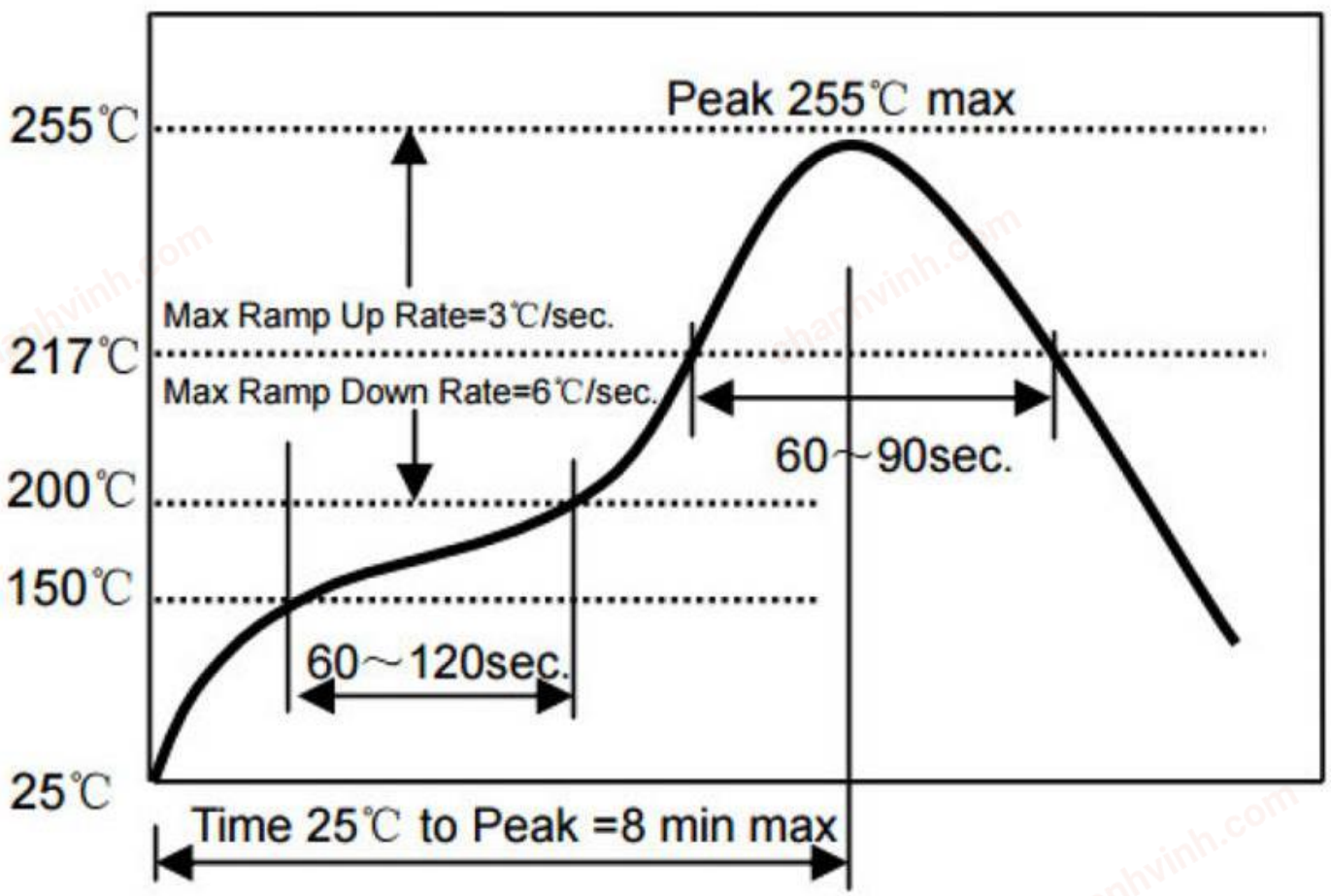



In the effort to improve our products, we reserve the right to make changes judged to be necessary.
CONFIDENTIAL AND PROPRIETARY INFORMATION
This document contains confidential and proprietary information of Pulse Electronics, Inc. (Pulse) and is protected by copyright, trade secret and other state and federal laws. Its receipt or possession does not convey any rights to reproduce, disclose its contents, or to manufacture, use or sell anything it may describe. Reproduction, disclosure or use without specific written authorization of Pulse is strictly forbidden.

RoHS COMPLIANT

chanhvinh.com

Pulse
a YAGEO company

TECHNICAL DATA SHEET

**Description**: 13.56MHz RFID/NFC SMD Antenna

**Series:** Embedded NFC

**PART NUMBER: W3102**

## PCB PAD LAYOUT

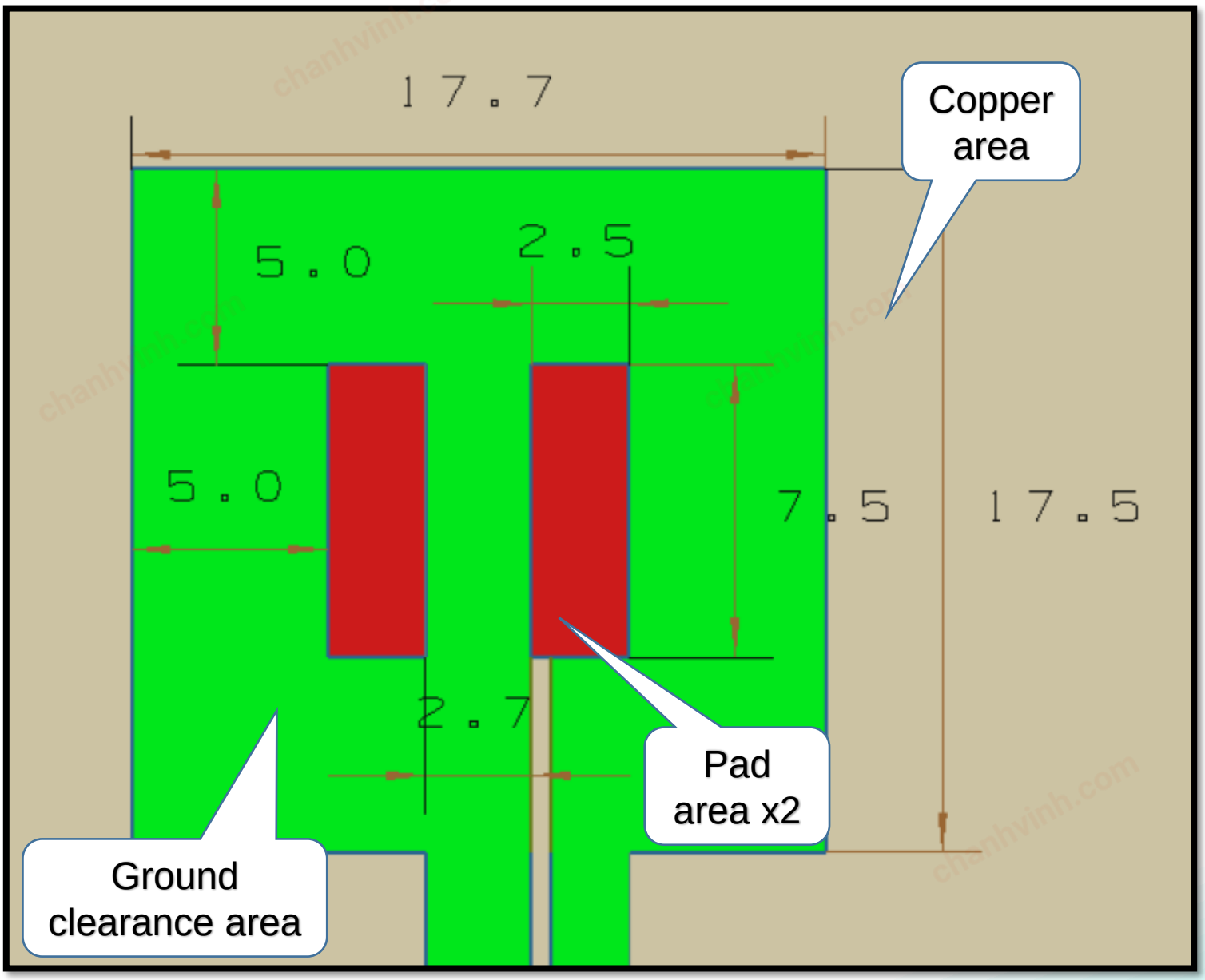



In the effort to improve our products, we reserve the right to make changes judged to be necessary.
CONFIDENTIAL AND PROPRIETARY INFORMATION
This document contains confidential and proprietary information of Pulse Electronics, Inc. (Pulse) and is protected by copyright, trade secret and other state and federal laws. Its receipt or possession does not convey any rights to reproduce, disclose its contents, or to manufacture, use or sell anything it may describe. Reproduction, disclosure or use without specific written authorization of Pulse is strictly forbidden.

RoHS COMPLIANT

chanhvinh.com

Pulse
a YAGEO company

TECHNICAL DATA SHEET

**Description**: 13.56MHz RFID/NFC SMD Antenna

**Series:** Embedded NFC

**PART NUMBER: W3102**

## TEST SETUP




ACR card reader

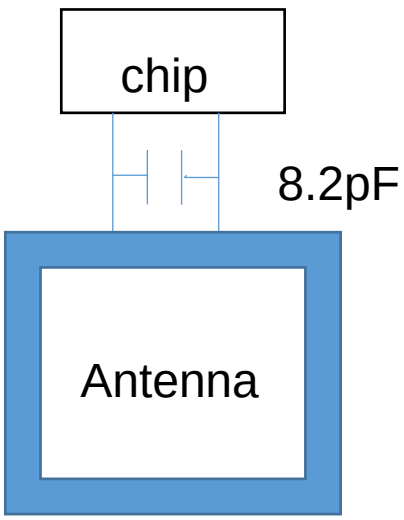


Matching circuit


In the effort to improve our products, we reserve the right to make changes judged to be necessary.
CONFIDENTIAL AND PROPRIETARY INFORMATION
This document contains confidential and proprietary information of Pulse Electronics, Inc. (Pulse) and is protected by copyright, trade secret and other state and federal laws. Its receipt or possession does not convey any rights to reproduce, disclose its contents, or to manufacture, use or sell anything it may describe. Reproduction, disclosure or use without specific written authorization of Pulse is strictly forbidden.

RoHS COMPLIANT

chanhvinh.com

Pulse
a YAGEO company

**Series:** Embedded NFC

TECHNICAL DATA SHEET

**Description**: 13.56MHz RFID/NFC SMD Antenna

**PART NUMBER: W3102**

## PACKAGING

1.Tape and reel packing with plastic vacuum bag.

1000 PCS/ REEL, 3 Reels/ Small BOX, 3 Small Boxes/ Big Box

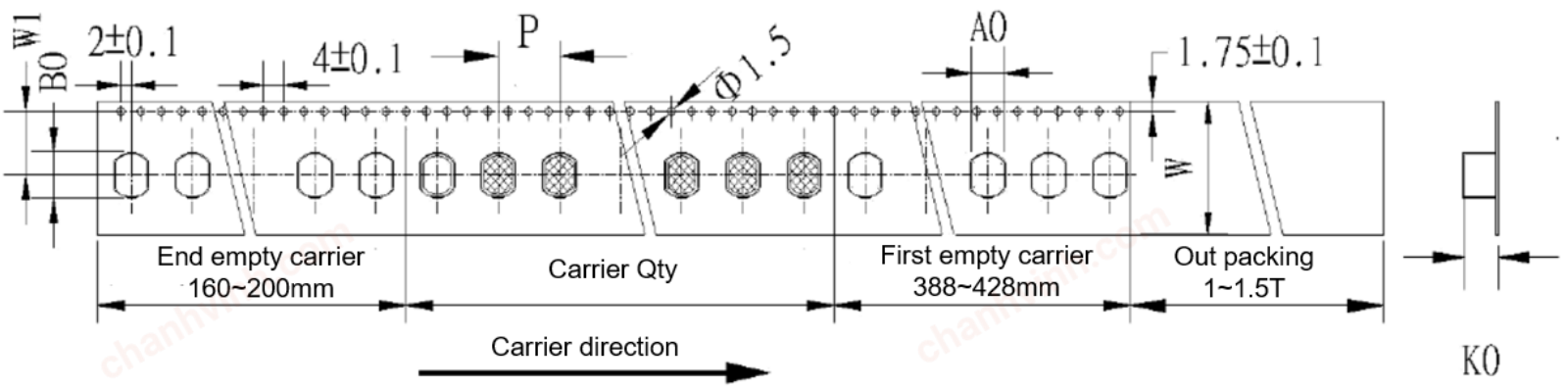


| Type | Carrier Size | | | | | | |
|---|---|---|---|---|---|---|---|
| | W | W1 | T | P | A0 | B0 | K0 |
| W3102 | 16 | 12.5 | 0.4 | 12 | 7.5 | 6.1 | 9.5 |

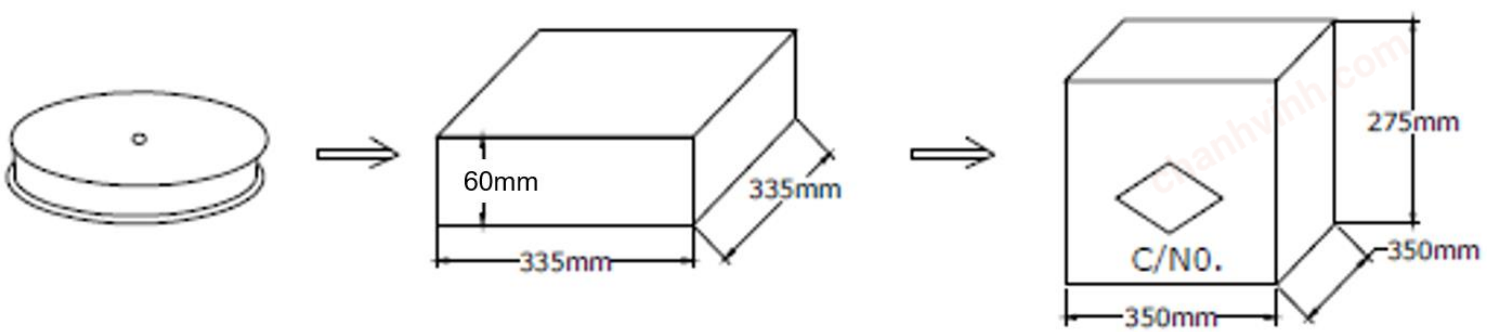


Issue: 2147

In the effort to improve our products, we reserve the right to make changes judged to be necessary.
CONFIDENTIAL AND PROPRIETARY INFORMATION
This document contains confidential and proprietary information of Pulse Electronics, Inc. (Pulse) and is protected by copyright, trade secret and other state and federal laws. Its receipt or possession does not convey any rights to reproduce, disclose its contents, or to manufacture, use or sell anything it may describe. Reproduction, disclosure or use without specific written authorization of Pulse is strictly forbidden.

RoHS COMPLIANT

chanhvinh.com



## 2. MSL: Level 3

2.1 Calculated shelf life in sealed bag: 12 months at < 30℃ and 60% relative humidity (RH)

2.2 Peak temperature in reflow: 255 ℃ Max

2.3 After bag is opened, devices that will be subjected to reflow solder or other temperature process must:

a) Mount within: 168 hours of factory conditions ≤ 30 ℃/60%

b) stored at < 20% RH

2.4 Devices require bake, before mounting, if:

a) Humidity Indicator Card is > 20% when read at 23 ± 5 ℃

b) 3a or 3b not met

2.5 If baking is required, devices may be baked for 24 hours at 125~130 ℃



In the effort to improve our products, we reserve the right to make changes judged to be necessary.
CONFIDENTIAL AND PROPRIETARY INFORMATION
This document contains confidential and proprietary information of Pulse Electronics, Inc. (Pulse) and is protected by copyright, trade secret and other state and federal laws. Its receipt or possession does not convey any rights to reproduce, disclose its contents, or to manufacture, use or sell anything it may describe. Reproduction, disclosure or use without specific written authorization of Pulse is strictly forbidden.