chanhvinh.com

Pulse
a YAGEO company

TECHNICAL DATA SHEET

Description: Ceramic Dual Band WLAN

Series: Antenna

PART NUMBER: W3079

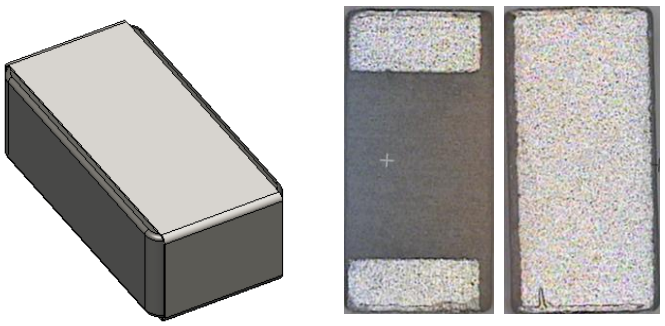

Features:

- High efficiency and high peak gain
- Low Profile
- Compact size (3.2x1.56x1.1mm)
- SMD compatible

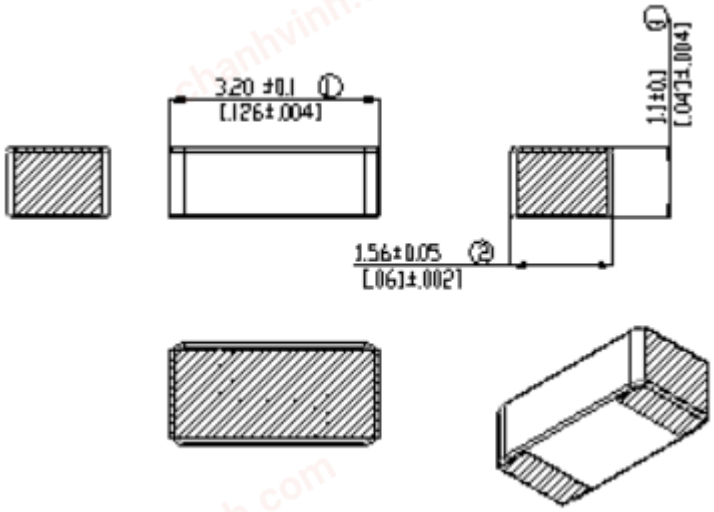

Applications:

- IEEE 802.11 a/b/g
- Bluetooth, Zigbee
- 2.4GHz and 5GHz WLAN
- 2.4GHz and 5GHz ISM band

All dimensions are in mm / inches

Issue: 2049

RoHS COMPLIANT

In the effort to improve our products, we reserve the right to make changes judged to be necessary.
CONFIDENTIAL AND PROPRIETARY INFORMATION
This document contains confidential and proprietary information of Pulse Electronics, Inc. (Pulse) and is protected by copyright, trade secret and other state and federal laws. Its receipt or possession does not convey any rights to reproduce, disclose its contents, or to manufacture, use or sell anything it may describe. Reproduction, disclosure or use without specific written authorization of Pulse is strictly forbidden.

For more information:

Pulse Worldwide Headquarters
12220 World Trade Drive
San Diego, CA 92128
USA
Tel:1-858-674-8100

Pulse/Larsen Antennas
3611 NE 112th Ave
Vancouver, WA 98682
USA
Tel: 1-360-944-7551

Europe Headquarters
Pulse GmbH & Do, KG
Zeppelinstrasse 15
Herrenberg, Germany
Tel: 49 7032 7806 0

Pulse (Suzhou) Wireless Products Co, Inc.
99 Huo Ju Road(#29 Bldg,4th Phase
Suzhou New District
Jiangsu Province, Suzhou 215009 PR China
Tel: 86 512 6807 9998

chanhvinh.com

Ground clearance area under antenna

Pulse
a YAGEO company

TECHNICAL DATA SHEET

Description: Ceramic Dual Band WLAN

Series: Antenna

PART NUMBER: W3079

ELECTRICAL SPECIFICATIONS

Frequency	2.4–2.4835 / 5.15–5.85 GHz
Nominal Impedance	50 Ω
VSWR	< 1.9 / < 2.5
Gain (peak)	2.4 / 5.7 dBi +/- 1 dB
Total efficiency (peak)	70 / 77 %
Ground clearance area under antenna	6.0 x 11.00mm

MECHANICAL SPECIFICATIONS

Weight	0,033 g
Overall Dimensions (L*W*H)	3.2*1.56*1.1 mm

ENVIRONMENTAL SPECIFICATIONS

Operating temperature	-40-+85 ° C
MSL	Level 1

In the effort to improve our products, we reserve the right to make changes judged to be necessary.
CONFIDENTIAL AND PROPRIETARY INFORMATION
This document contains confidential and proprietary information of Pulse Electronics, Inc. (Pulse) and is protected by copyright, trade secret and other state and federal laws. Its receipt or possession does not convey any rights to reproduce, disclose its contents, or to manufacture, use or sell anything it may describe. Reproduction, disclosure or use without specific written authorization of Pulse is strictly forbidden.

RoHS COMPLIANT

chanhvinh.com

Pulse
a YAGEO company

TECHNICAL DATA SHEET

Description: Ceramic Dual Band WLAN

Series: Antenna

PART NUMBER: W3079

MECHANICAL DRAWING

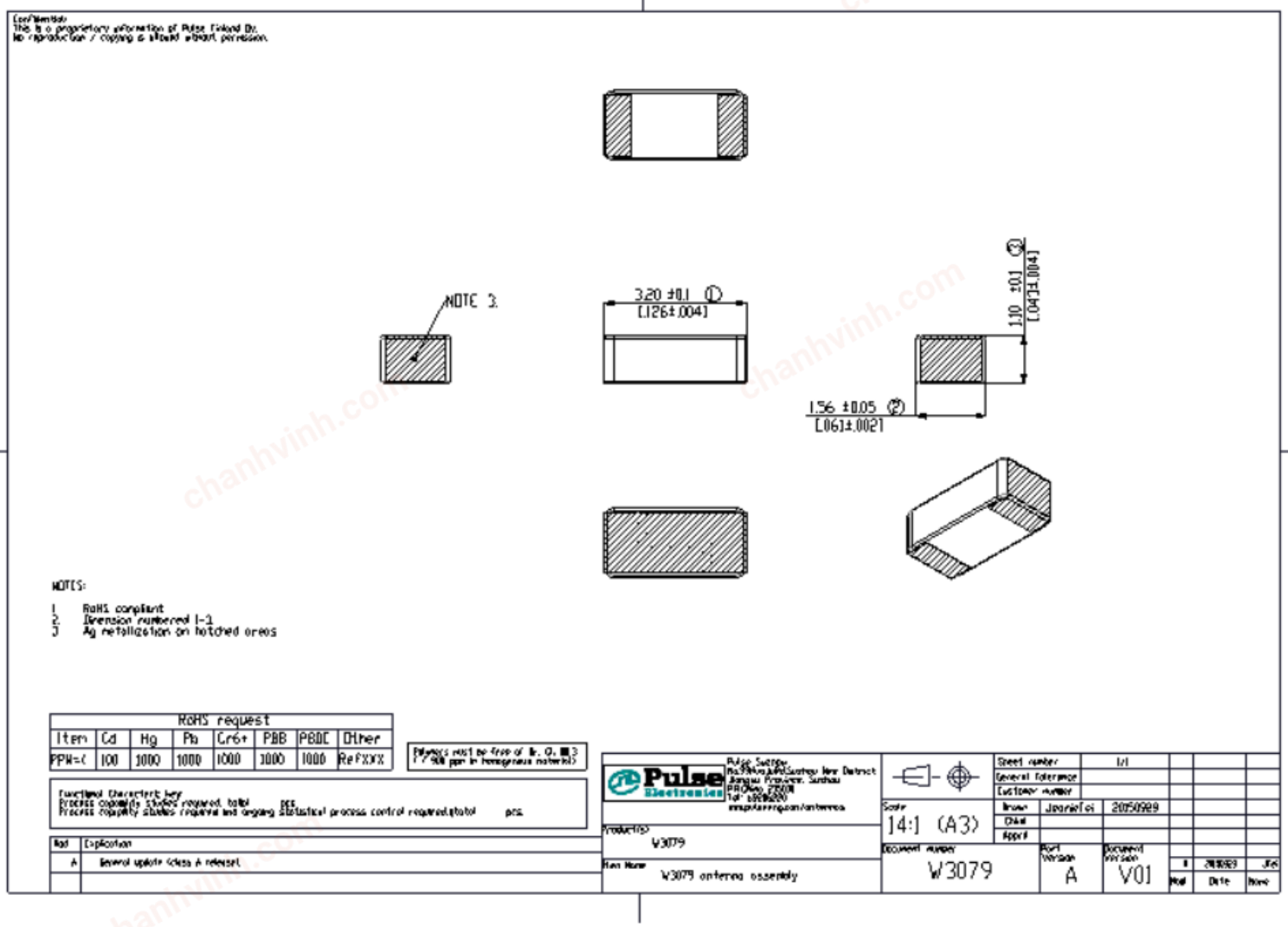

Issue: 2049

In the effort to improve our products, we reserve the right to make changes judged to be necessary.

CONFIDENTIAL AND PROPRIETARY INFORMATION
This document contains confidential and proprietary information of Pulse Electronics, Inc. (Pulse) and is protected by copyright, trade secret and other state and federal laws. Its receipt or possession does not convey any rights to reproduce, disclose its contents, or to manufacture, use or sell anything it may describe. Reproduction, disclosure or use without specific written authorization of Pulse is strictly forbidden.

RoHS COMPLIANT

chanhvinh.com

Pulse
a YAGEO company

TECHNICAL DATA SHEET

Description: Ceramic Dual Band WLAN

Series: Antenna

PART NUMBER: W3079

OTHER SPECIFICATIONS

Top side

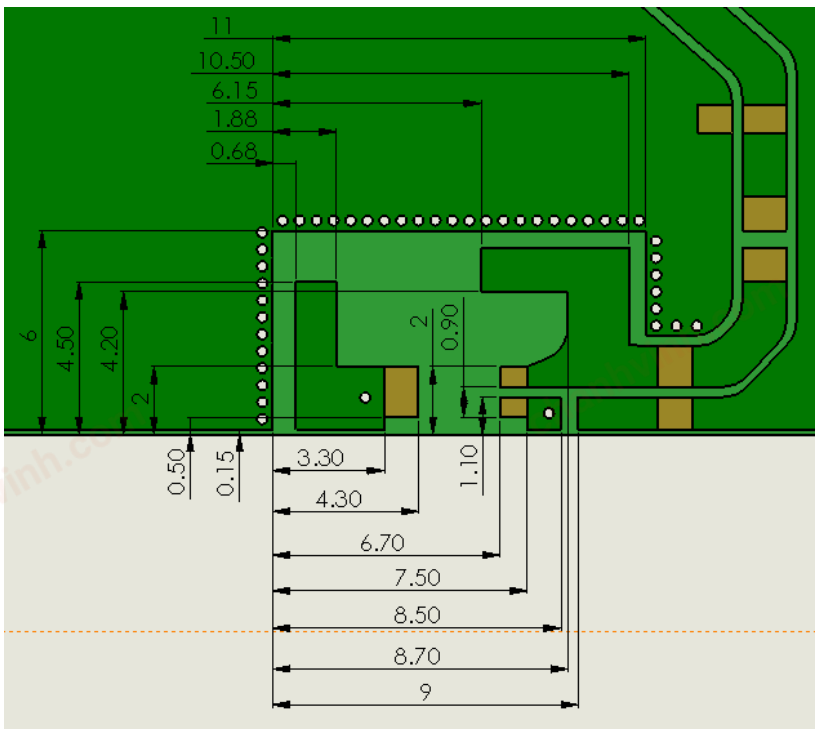

Bottom side

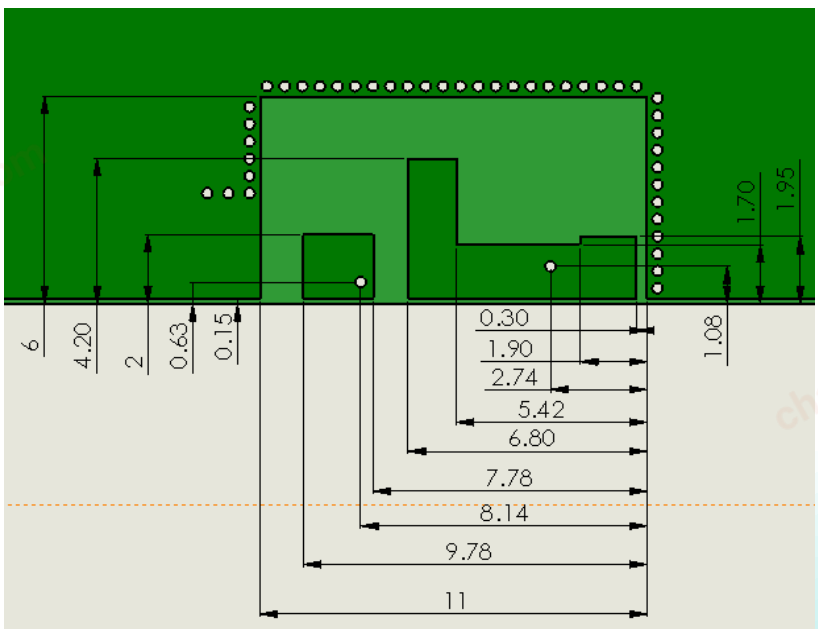

Issue: 2049

In the effort to improve our products, we reserve the right to make changes judged to be necessary.
CONFIDENTIAL AND PROPRIETARY INFORMATION
This document contains confidential and proprietary information of Pulse Electronics, Inc. (Pulse) and is protected by copyright, trade secret and other state and federal laws. Its receipt or possession does not convey any rights to reproduce, disclose its contents, or to manufacture, use or sell anything it may describe. Reproduction, disclosure or use without specific written authorization of Pulse is strictly forbidden.

RoHS COMPLIANT

chanhvinh.com

Pulse
a YAGEO company

TECHNICAL DATA SHEET

Description: Ceramic Dual Band WLAN

Series: Antenna

PART NUMBER: W3079

OTHER SPECIFICATIONS

Top side

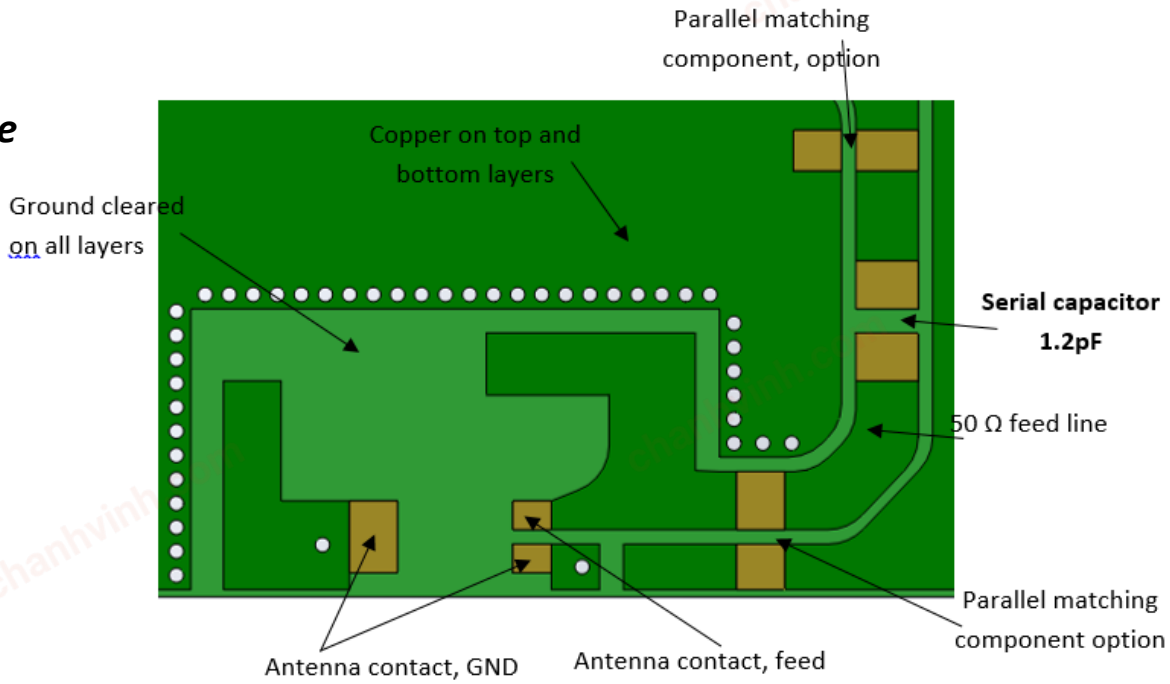

Bottom side

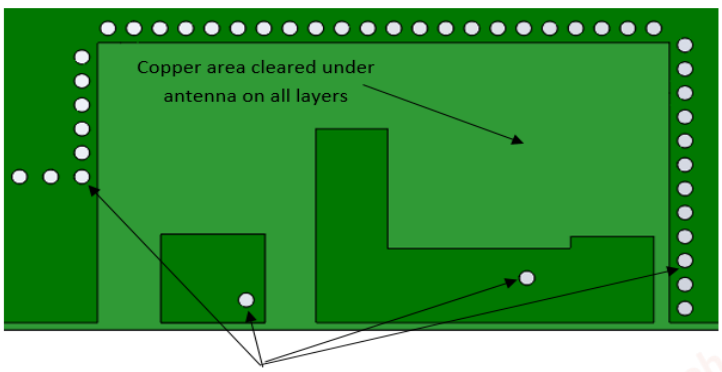

Via holes connecting top and bottom layer copper

In the effort to improve our products, we reserve the right to make changes judged to be necessary.
CONFIDENTIAL AND PROPRIETARY INFORMATION
This document contains confidential and proprietary information of Pulse Electronics, Inc. (Pulse) and is protected by copyright, trade secret and other state and federal laws. Its receipt or possession does not convey any rights to reproduce, disclose its contents, or to manufacture, use or sell anything it may describe. Reproduction, disclosure or use without specific written authorization of Pulse is strictly forbidden.

RoHS COMPLIANT

chanhvinh.com

Pulse
a YAGEO company

TECHNICAL DATA SHEET

Description: Ceramic Dual Band WLAN

Series: Antenna

PART NUMBER: W3079

Recommended Antenna Position on PCB

- The recommended antenna location is the center edge of the longer PCB side.
- All measurement results of W3079 are measured on the 37x80mm evaluation board with matching circuit (series 1.2pF capacitor).
- To construct a fine matching on customer PCB design, proper impedance matching values should be obtained with a final customer PCB dimension, surrounded metallic components, and a package condition (with final assembly condition).
- The recommended minimum PCB size is around 35x35mm to obtain similar RF performances of datasheet. For more discussion, please contact to Pulse electronics.

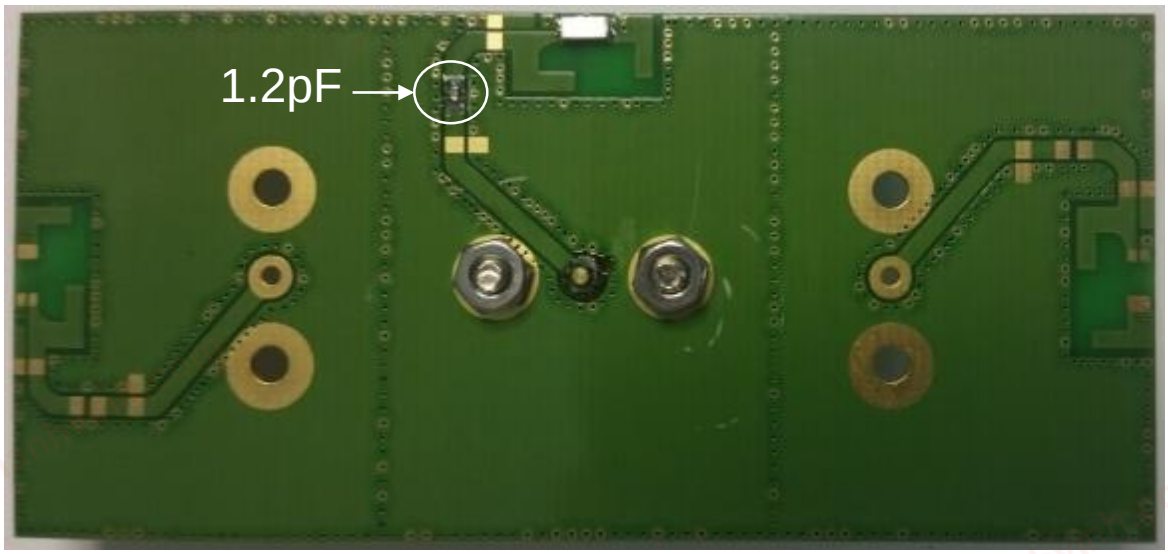

In the effort to improve our products, we reserve the right to make changes judged to be necessary.
CONFIDENTIAL AND PROPRIETARY INFORMATION
This document contains confidential and proprietary information of Pulse Electronics, Inc. (Pulse) and is protected by copyright, trade secret and other state and federal laws. Its receipt or possession does not convey any rights to reproduce, disclose its contents, or to manufacture, use or sell anything it may describe. Reproduction, disclosure or use without specific written authorization of Pulse is strictly forbidden.

RoHS COMPLIANT

chanhvinh.com

Pulse
a YAGEO company

TECHNICAL DATA SHEET

Description: Ceramic Dual Band WLAN

Series: Antenna

PART NUMBER: W3079

OTHER SPECIFICATIONS

Recommended reflow soldering

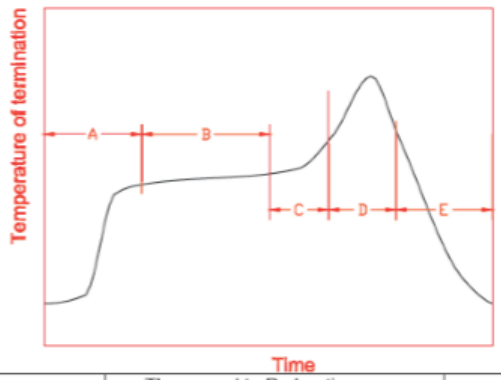

A	1st rising temperature	The normal to Preheating temperature	30s to 60s
B	Preheating	140℃ to 160℃	60s to 120s
C	2nd rising temperature	Preheating to 200℃	20s to 40s
D	Main heating	if 220℃	50s~60s
		if 230℃	40s~50s
		if 240℃	30s~40s
		if 250℃	20s~40s
		if 260℃	20s~40s
E	Regular cooling	200℃ to 100℃	1℃/s ~ 4℃/s

*reference: J-STD-020C

(1) Soldering gun procedure

Note the follows, in case of using solder gun for replacement.

(a) The tip temperature must be less than 350°C for the period within 3 seconds by using soldering gun under 30 W.

(b) The soldering gun tip shall not touch this product directly.

(2) Soldering volume

Note that excess of soldering volume will easily get crack the body of this product.

In the effort to improve our products, we reserve the right to make changes judged to be necessary.
CONFIDENTIAL AND PROPRIETARY INFORMATION
This document contains confidential and proprietary information of Pulse Electronics, Inc. (Pulse) and is protected by copyright, trade secret and other state and federal laws. Its receipt or possession does not convey any rights to reproduce, disclose its contents, or to manufacture, use or sell anything it may describe. Reproduction, disclosure or use without specific written authorization of Pulse is strictly forbidden.

RoHS COMPLIANT

chanhvinh.com

Pulse
a YAGEO company

TECHNICAL DATA SHEET

Description: Ceramic Dual Band WLAN

Series: Antenna

PART NUMBER: W3079

CHARTS

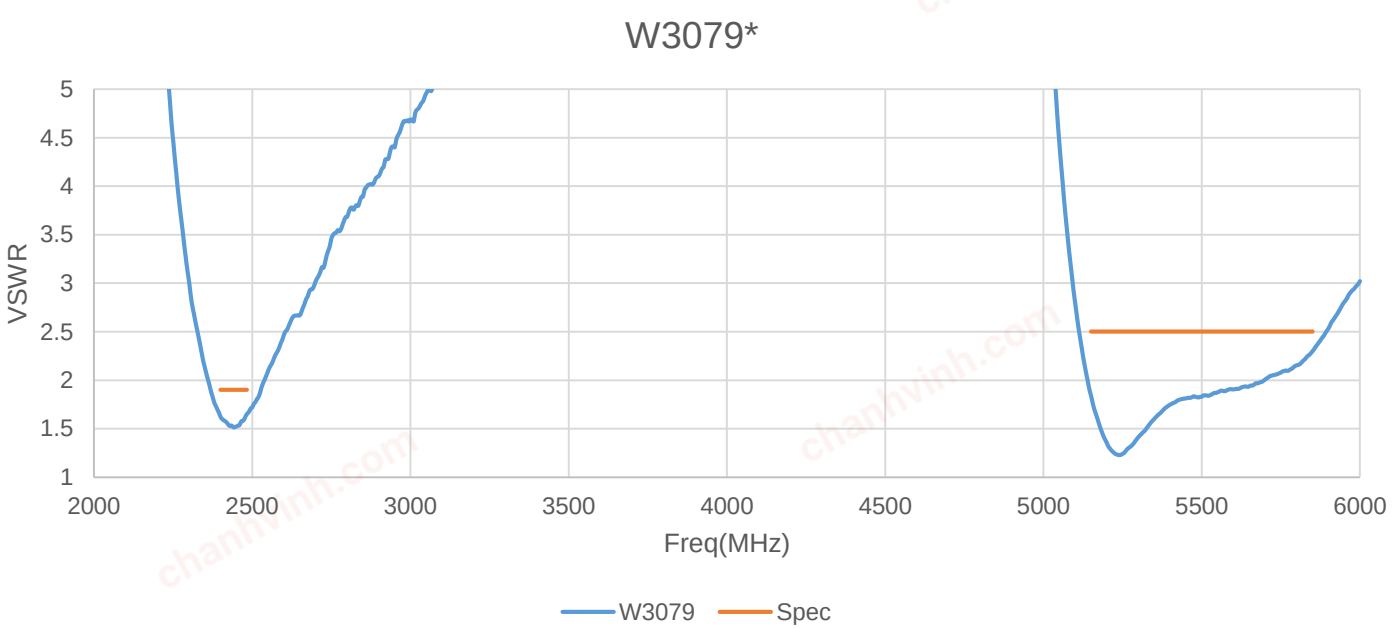

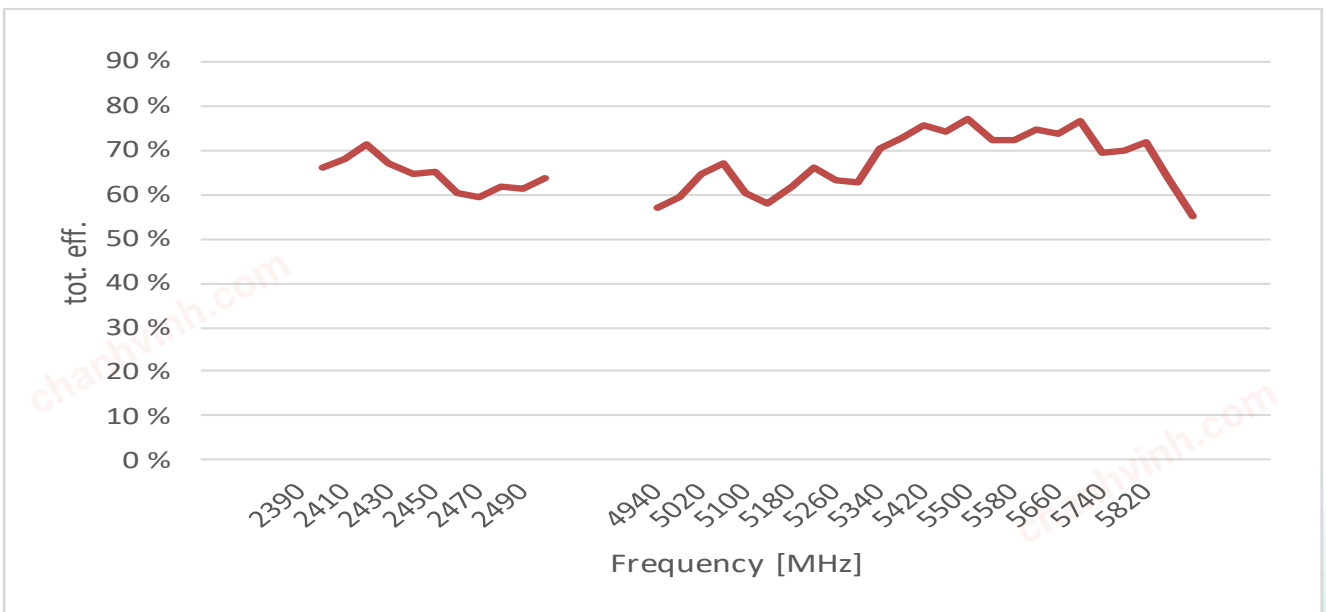

*** Free space measurements on Pulse reference test PCB**

Issue: 2049

In the effort to improve our products, we reserve the right to make changes judged to be necessary.
CONFIDENTIAL AND PROPRIETARY INFORMATION
This document contains confidential and proprietary information of Pulse Electronics, Inc. (Pulse) and is protected by copyright, trade secret and other state and federal laws. Its receipt or possession does not convey any rights to reproduce, disclose its contents, or to manufacture, use or sell anything it may describe. Reproduction, disclosure or use without specific written authorization of Pulse is strictly forbidden.

RoHS COMPLIANT

chanhvinh.com

Pulse
a YAGEO company

TECHNICAL DATA SHEET

Description: Ceramic Dual Band WLAN

Series: Antenna

PART NUMBER: W3079

CHARTS

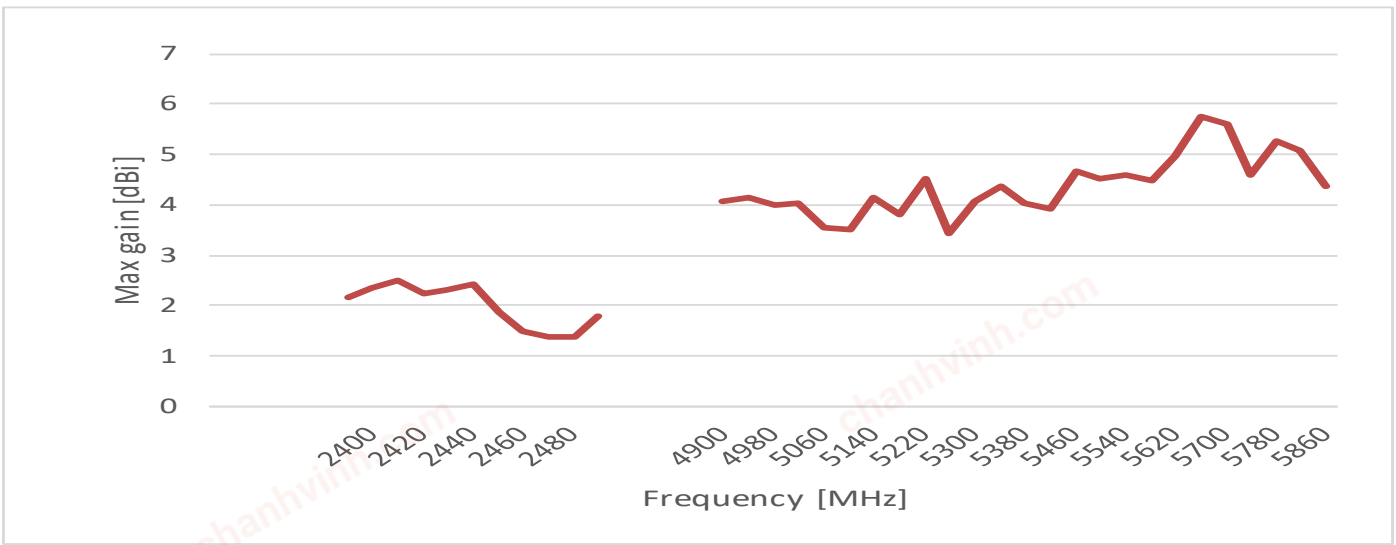

*** Free space measurements on Pulse reference test PCB**

In the effort to improve our products, we reserve the right to make changes judged to be necessary.
CONFIDENTIAL AND PROPRIETARY INFORMATION
This document contains confidential and proprietary information of Pulse Electronics, Inc. (Pulse) and is protected by copyright, trade secret and other state and federal laws. Its receipt or possession does not convey any rights to reproduce, disclose its contents, or to manufacture, use or sell anything it may describe. Reproduction, disclosure or use without specific written authorization of Pulse is strictly forbidden.

RoHS COMPLIANT

chanhvinh.com

Pulse a YAGEO company

TECHNICAL DATA SHEET

Description: Ceramic Dual Band WLAN

Series: Antenna

PART NUMBER: W3079

CHARTS

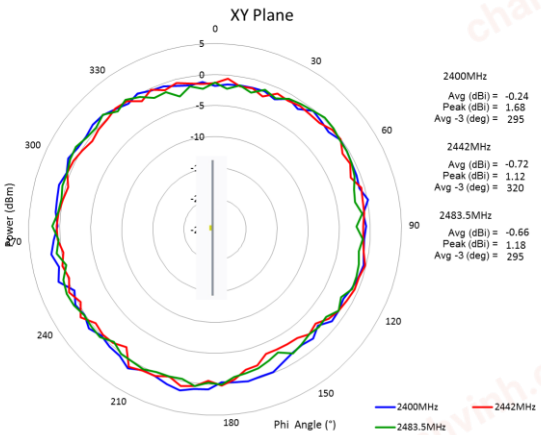

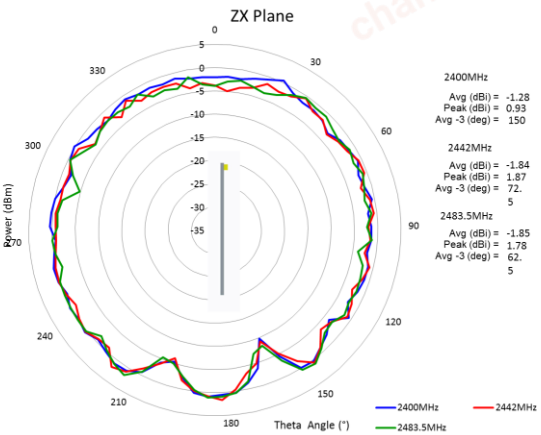

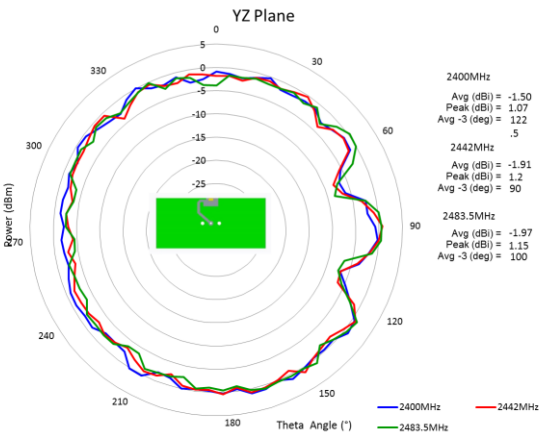

*** Free space measurements on Pulse reference test PCB**

In the effort to improve our products, we reserve the right to make changes judged to be necessary.
CONFIDENTIAL AND PROPRIETARY INFORMATION
This document contains confidential and proprietary information of Pulse Electronics, Inc. (Pulse) and is protected by copyright, trade secret and other state and federal laws. Its receipt or possession does not convey any rights to reproduce, disclose its contents, or to manufacture, use or sell anything it may describe. Reproduction, disclosure or use without specific written authorization of Pulse is strictly forbidden.

RoHS COMPLIANT

chanhvinh.com

Pulse a YAGEO company

TECHNICAL DATA SHEET

Description: Ceramic Dual Band WLAN

Series: Antenna

PART NUMBER: W3079

CHARTS

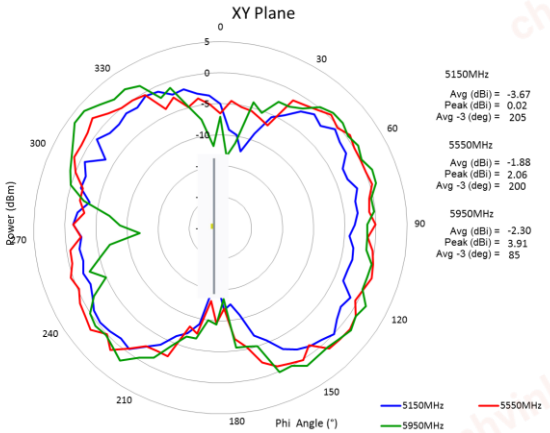

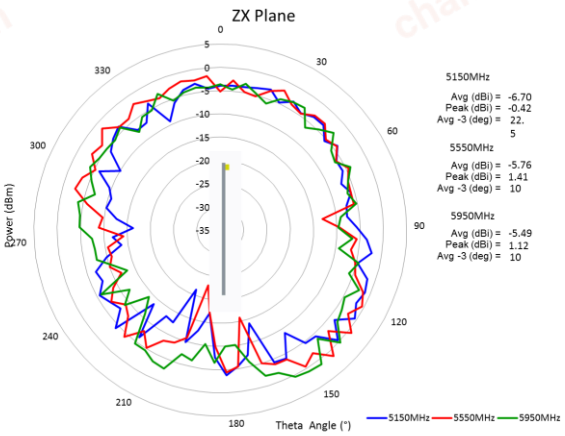

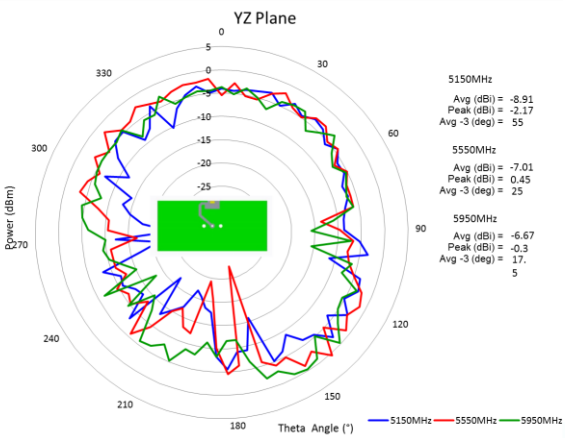

*** Free space measurements on Pulse reference test PCB**

In the effort to improve our products, we reserve the right to make changes judged to be necessary.
CONFIDENTIAL AND PROPRIETARY INFORMATION
This document contains confidential and proprietary information of Pulse Electronics, Inc. (Pulse) and is protected by copyright, trade secret and other state and federal laws. Its receipt or possession does not convey any rights to reproduce, disclose its contents, or to manufacture, use or sell anything it may describe. Reproduction, disclosure or use without specific written authorization of Pulse is strictly forbidden.

RoHS COMPLIANT

chanhvinh.com

Pulse
a YAGEO company

TECHNICAL DATA SHEET

Description: Ceramic Dual Band WLAN

Series: Antenna

PART NUMBER: W3079

PACKAGING

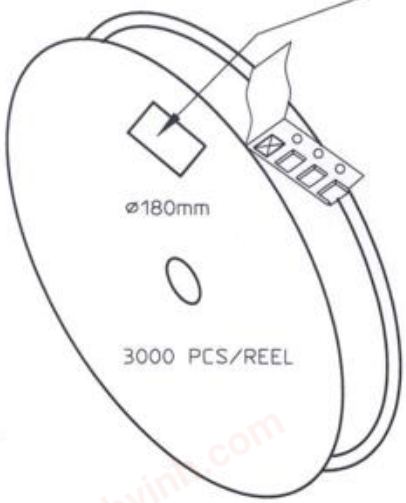

REEL LABEL INFORMATION:
- TRACEABILITY
- QUANTITY
- PRODUCT CODE

CARRIER TAPE H85-00125
width=8,00 depth=1,22
COVER TAPE H85-00126
width=5,60

LENGTH OF TAPE:

- Leader section: min 350 mm before component section
- Trailer section: min 40 mm after component section.

Empty part cavities at leader and trailer section of the tape must be sealed with top cover tape.

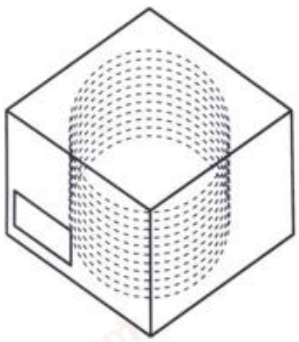

BOX H85-00128 (182x182x132)	1 pcs
- LABEL	1 pcs/BOX
REEL H85-00127 (D180,W12)	10 pcs
- REEL LABEL	1 pcs/REEL

ASSEMBLY

In the effort to improve our products, we reserve the right to make changes judged to be necessary.
CONFIDENTIAL AND PROPRIETARY INFORMATION
This document contains confidential and proprietary information of Pulse Electronics, Inc. (Pulse) and is protected by copyright, trade secret and other state and federal laws. Its receipt or possession does not convey any rights to reproduce, disclose its contents, or to manufacture, use or sell anything it may describe. Reproduction, disclosure or use without specific written authorization of Pulse is strictly forbidden.