chanhvinh.com

Pulse | LARSEN Antennas
A YAGEO Company

TECHNICAL DATA SHEET

Description: 868MHz Monopole SMD Antenna

Series: Ceramic Chip Antenna

PART NUMBER: W3016





Features:

- 863-870MHz
- Monopole radiator
- Gain -3dBi
- Size 10 x 3.2 x 4 mm
- Optimized for small PCB
- Easy tuning with matching circuit

Applications:

- ISM 868MHz radios
- Sigfox
- LoRa
- IoT, M2M
- Sensors, monitors

All dimensions are in mm

Issue: 1918

RoHS COMPLIANT

In the effort to improve our products, we reserve the right to make changes judged to be necessary.
CONFIDENTIAL AND PROPRIETARY INFORMATION
This document contains confidential and proprietary information of Pulse Electronics, Inc. (Pulse) and is protected by copyright, trade secret and other state and federal laws. Its receipt or possession does not convey any rights to reproduce, disclose its contents, or to manufacture, use or sell anything it may describe. Reproduction, disclosure or use without specific written authorization of Pulse is strictly forbidden.

For more information:

Pulse Worldwide Headquarters
15255 Innovation Drive #100
San Diego, CA 92128
USA
Tel:1-858-674-8100

Pulse/Larsen Antennas
18110 SE 34th St Bldg 2 Suite 250
Vancouver, WA 98683
USA
Tel: 1-360-944-7551

Europe Headquarters
Pulse GmbH & Do, KG
Zeppelinstrasse 15
Herrenberg, Germany
Tel: 49 7032 7806 0

Pulse (Suzhou) Wireless Products Co, Inc.
99 Huo Ju Road(#29 Bldg,4th Phase
Suzhou New District
Jiangsu Province, Suzhou 215009 PR China
Tel: 86 512 6807 9998

chanhvinh.com

Pulse | LARSEN Antennas
A YAGEO Company

TECHNICAL DATA SHEET

Description: 868MHz Monopole SMD Antenna

Series: Ceramic Chip Antenna

PART NUMBER: W3016

ELECTRICAL SPECIFICATIONS

Antenna Type	Ceramic HTC
Frequency	863-870 MHz
Nominal Impedance	50 Ω
Return Loss	<-15 dB
Radiation Pattern	Omni
Gain	>-3 dBi
Efficiency	>20%
Polarization	Vertical
Power Withstanding	2 W

MECHANICAL SPECIFICATIONS

Overall Length	10x3.2x4mm
Weight	0.6g
Antenna Color / Material	Ceramic Grey / Silver
Moisture Sensitivity Level	MSL1

ENVIRONMENTAL SPECIFICATIONS

Operating Temperature	-40 to +85 ° C
Storage Temperature	-40 to +85°
RoHS Compliant	Yes

Above electrical specification tested on 25x25mm sized PCB

In the effort to improve our products, we reserve the right to make changes judged to be necessary.
CONFIDENTIAL AND PROPRIETARY INFORMATION
This document contains confidential and proprietary information of Pulse Electronics, Inc. (Pulse) and is protected by copyright, trade secret and other state and federal laws. Its receipt or possession does not convey any rights to reproduce, disclose its contents, or to manufacture, use or sell anything it may describe. Reproduction, disclosure or use without specific written authorization of Pulse is strictly forbidden.

RoHS COMPLIANT

chanhvinh.com

Pulse | LARSEN Antennas
A YAGEO Company

TECHNICAL DATA SHEET

Description: 868MHz Monopole SMD Antenna

Series: Ceramic Chip Antenna

PART NUMBER: W3016

MECHANICAL DRAWING

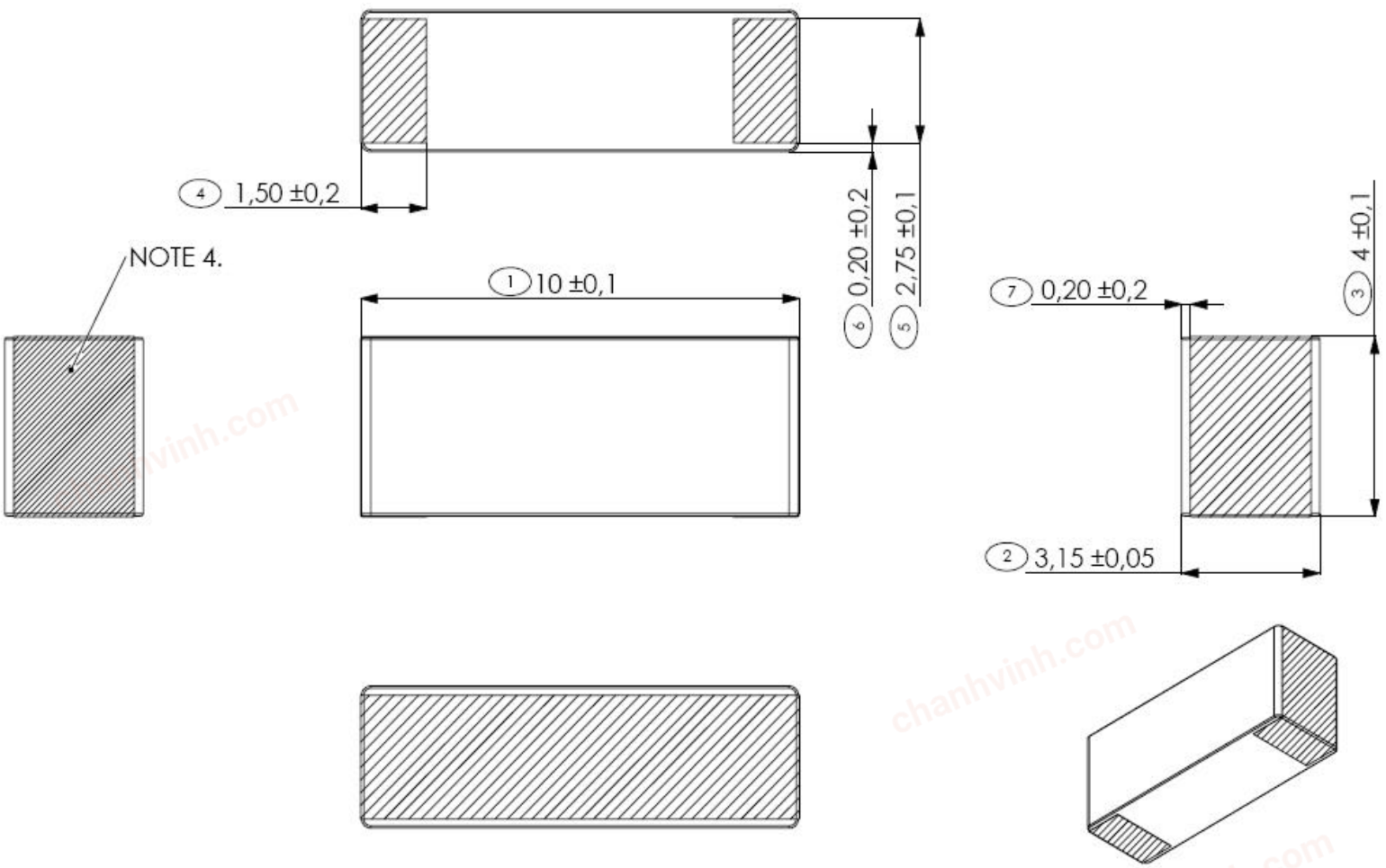

c	Terminal Name	Terminal Dimensions
1	Feed	1.5 x 2.75 mm
2	Support pad	1.5 x 2.75 mm
Antenna is symmetrical and orientation on footprint can be rotated 180 degrees without change in performance		

In the effort to improve our products, we reserve the right to make changes judged to be necessary.
CONFIDENTIAL AND PROPRIETARY INFORMATION
This document contains confidential and proprietary information of Pulse Electronics, Inc. (Pulse) and is protected by copyright, trade secret and other state and federal laws. Its receipt or possession does not convey any rights to reproduce, disclose its contents, or to manufacture, use or sell anything it may describe. Reproduction, disclosure or use without specific written authorization of Pulse is strictly forbidden.

RoHS COMPLIANT

chanhvinh.com

Pulse | LARSEN Antennas
A YAGEO Company

TECHNICAL DATA SHEET

Description: 868MHz Monopole SMD Antenna

Series: Ceramic Chip Antenna

PART NUMBER: W3016

MECHANICAL DRAWING

Test Board Layout

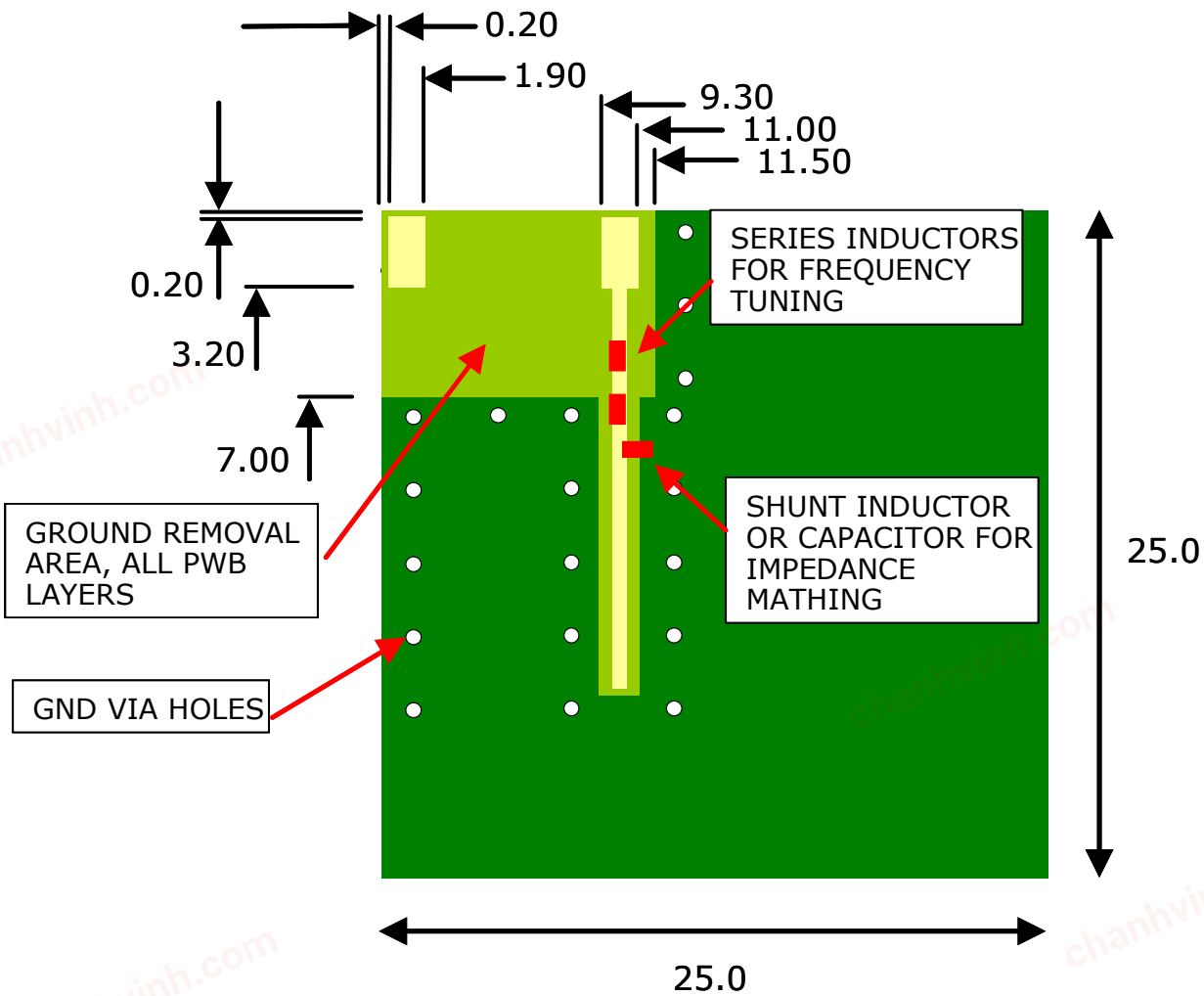

In the effort to improve our products, we reserve the right to make changes judged to be necessary.
CONFIDENTIAL AND PROPRIETARY INFORMATION
This document contains confidential and proprietary information of Pulse Electronics, Inc. (Pulse) and is protected by copyright, trade secret and other state and federal laws. Its receipt or possession does not convey any rights to reproduce, disclose its contents, or to manufacture, use or sell anything it may describe. Reproduction, disclosure or use without specific written authorization of Pulse is strictly forbidden.

RoHS COMPLIANT

chanhvinh.com

Pulse | LARSEN Antennas
A YAGEO Company

TECHNICAL DATA SHEET

Description: 868MHz Monopole SMD Antenna

Series: Ceramic Chip Antenna

PART NUMBER: W3016

TEST SETUP



Test on Pulse test board with ferrite bead test cable.

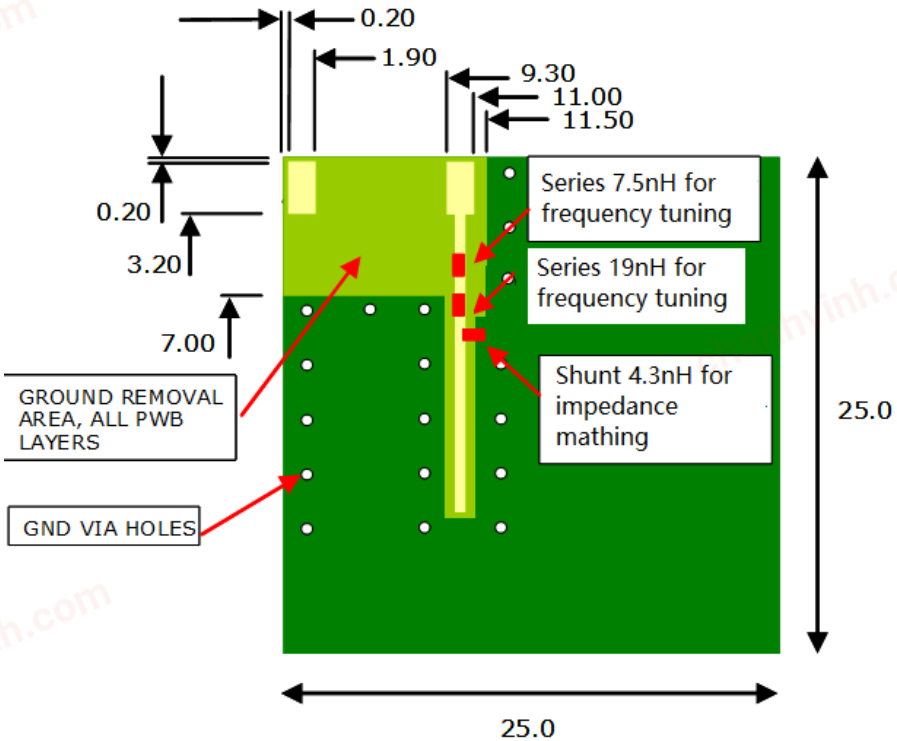

Matching circuit for reference

In the effort to improve our products, we reserve the right to make changes judged to be necessary.
CONFIDENTIAL AND PROPRIETARY INFORMATION
This document contains confidential and proprietary information of Pulse Electronics, Inc. (Pulse) and is protected by copyright, trade secret and other state and federal laws. Its receipt or possession does not convey any rights to reproduce, disclose its contents, or to manufacture, use or sell anything it may describe. Reproduction, disclosure or use without specific written authorization of Pulse is strictly forbidden.

RoHS COMPLIANT

chanhvinh.com

Pulse | LARSEN Antennas
A YAGEO Company

TECHNICAL DATA SHEET

Description: 868MHz Monopole SMD Antenna

Series: Ceramic Chip Antenna

PART NUMBER: W3016

CHARTS

Return loss on Test board

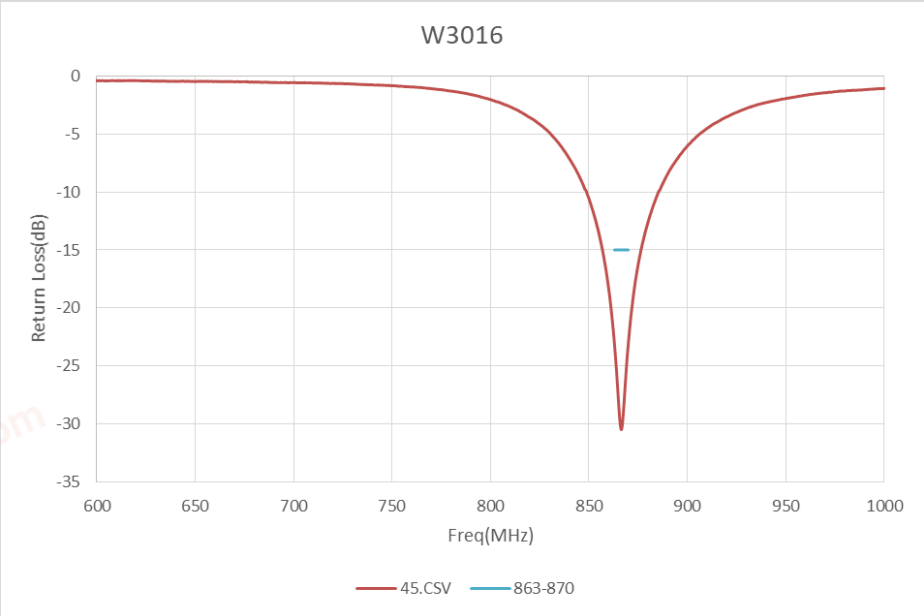

Radiation Efficiency on Test board

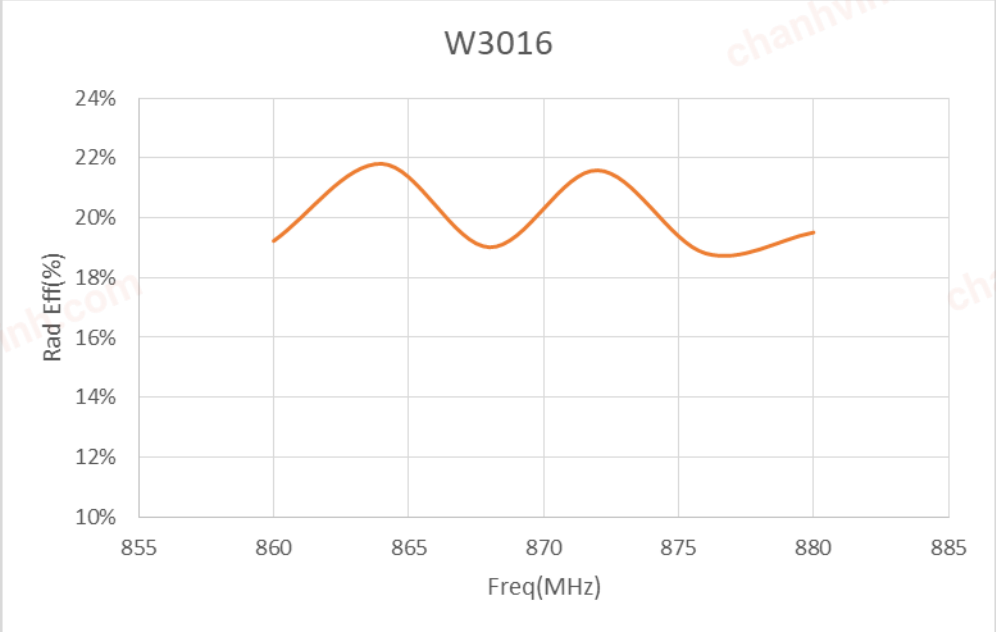

In the effort to improve our products, we reserve the right to make changes judged to be necessary.
CONFIDENTIAL AND PROPRIETARY INFORMATION
This document contains confidential and proprietary information of Pulse Electronics, Inc. (Pulse) and is protected by copyright, trade secret and other state and federal laws. Its receipt or possession does not convey any rights to reproduce, disclose its contents, or to manufacture, use or sell anything it may describe. Reproduction, disclosure or use without specific written authorization of Pulse is strictly forbidden.

RoHS COMPLIANT

chanhvinh.com

Pulse | LARSEN Antennas
A YAGEO Company

TECHNICAL DATA SHEET

Description: 868MHz Monopole SMD Antenna

Series: Ceramic Chip Antenna

PART NUMBER: W3016

CHARTS

Peak Gain on Test board

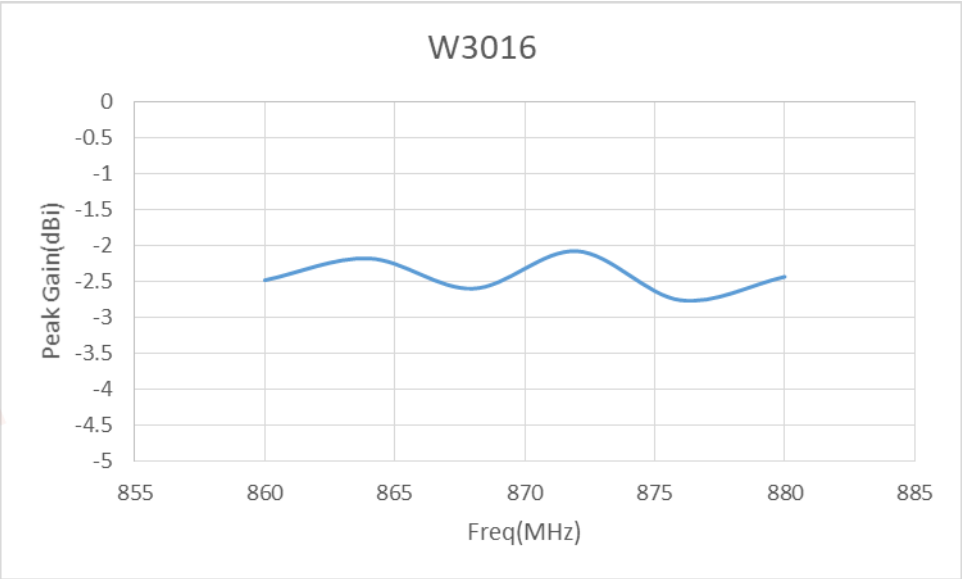

Radiation pattern at XY plane

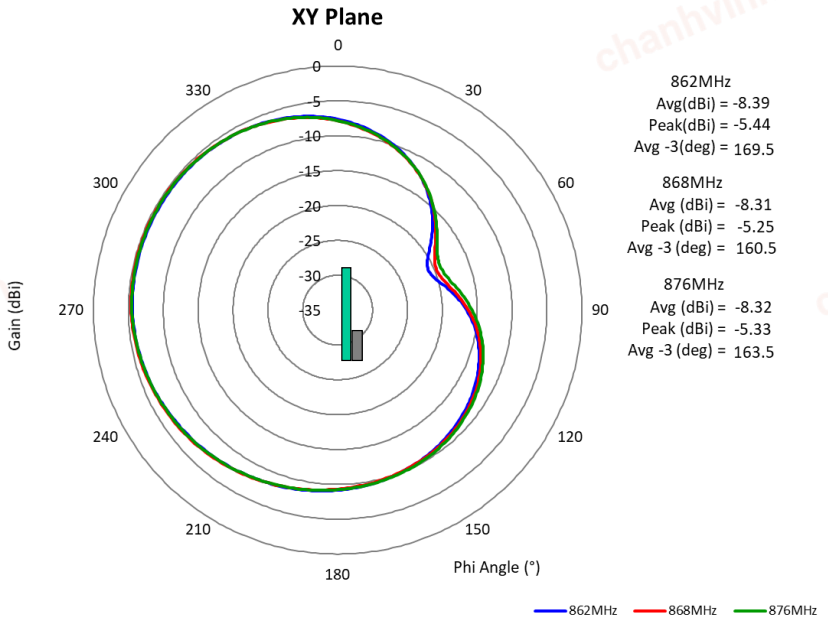

In the effort to improve our products, we reserve the right to make changes judged to be necessary.
CONFIDENTIAL AND PROPRIETARY INFORMATION
This document contains confidential and proprietary information of Pulse Electronics, Inc. (Pulse) and is protected by copyright, trade secret and other state and federal laws. Its receipt or possession does not convey any rights to reproduce, disclose its contents, or to manufacture, use or sell anything it may describe. Reproduction, disclosure or use without specific written authorization of Pulse is strictly forbidden.

RoHS COMPLIANT

chanhvinh.com

Pulse | LARSEN Antennas
A YAGEO Company

TECHNICAL DATA SHEET

Description: 868MHz Monopole SMD Antenna

Series: Ceramic Chip Antenna

PART NUMBER: W3016

CHARTS

Radiation pattern at ZX plane

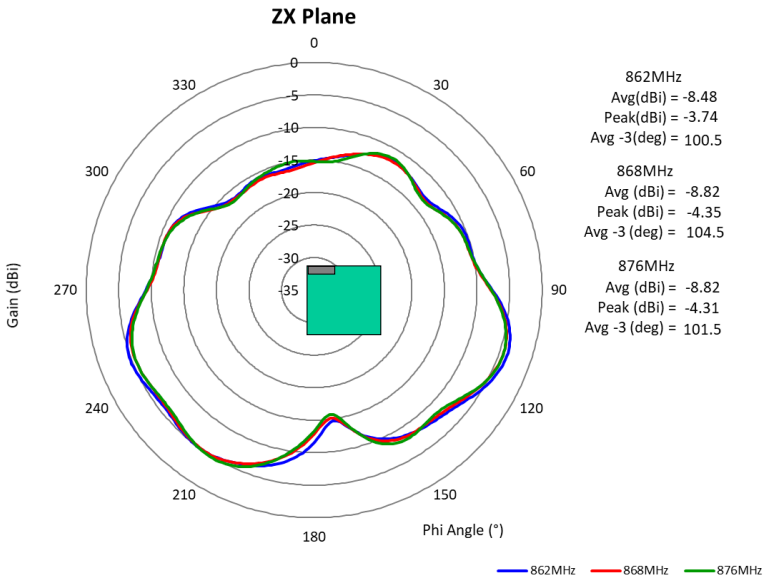

Radiation pattern at YZ plane

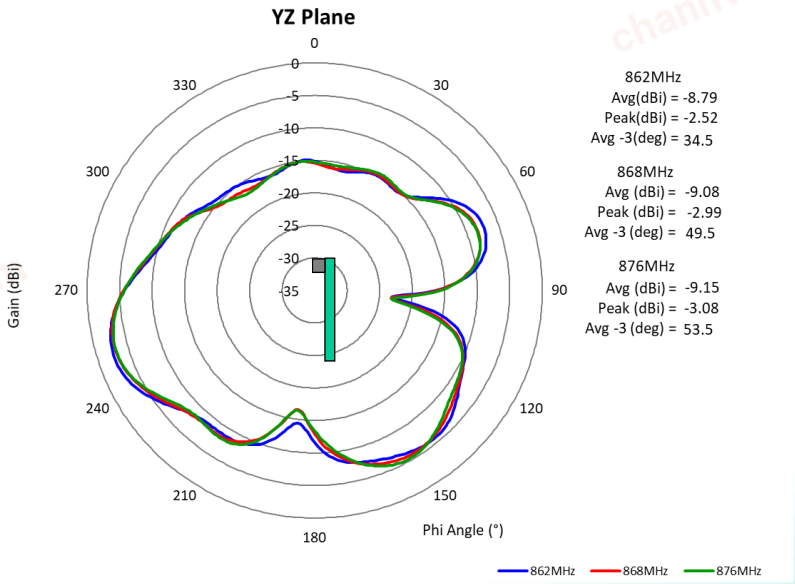

In the effort to improve our products, we reserve the right to make changes judged to be necessary.
CONFIDENTIAL AND PROPRIETARY INFORMATION
This document contains confidential and proprietary information of Pulse Electronics, Inc. (Pulse) and is protected by copyright, trade secret and other state and federal laws. Its receipt or possession does not convey any rights to reproduce, disclose its contents, or to manufacture, use or sell anything it may describe. Reproduction, disclosure or use without specific written authorization of Pulse is strictly forbidden.

RoHS COMPLIANT

chanhvinh.com

Pulse | LARSEN Antennas
A YAGEO Company

TECHNICAL DATA SHEET

Description: 868MHz Monopole SMD Antenna

Series: Ceramic Chip Antenna

PART NUMBER: W3016

PACKAGING

500pcs antennas per 7” reel

3pcs reel per inner box

2pcs inner box per outer box

Total 3000pcs antenna per package box

Package box: 390mm*215mm*165mm



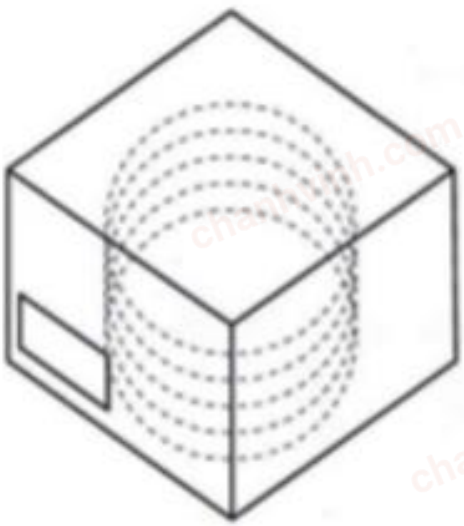

According to MSL1 packing requirement, MBB-Moisture Barrel Bag, Desiccant, HIC-Humidity Indicator Card, MSID Label, Caution Label are required.

In the effort to improve our products, we reserve the right to make changes judged to be necessary.
CONFIDENTIAL AND PROPRIETARY INFORMATION
This document contains confidential and proprietary information of Pulse Electronics, Inc. (Pulse) and is protected by copyright, trade secret and other state and federal laws. Its receipt or possession does not convey any rights to reproduce, disclose its contents, or to manufacture, use or sell anything it may describe. Reproduction, disclosure or use without specific written authorization of Pulse is strictly forbidden.

RoHS COMPLIANT