chanhvinh.com

Pulse | LARSEN Antennas
A YAGEO Company

TECHNICAL DATA SHEET

Description: 2.4-2.4835GHz Ceramic SMT antenna, 4x6.25mm keep out area

Series: Chip Antenna

PART NUMBER: W3008C

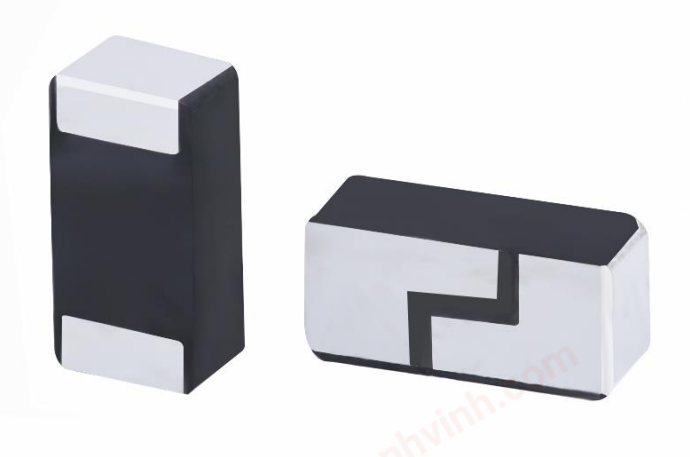

Features:

- 2400-2483.5MHz
- Size: 3.2 x 1.6 x 1.1mm
- Efficiency: 68 %
- Gain: 1.3 dBi
- Polarization: Linear
- Power Handling: 5W
- RoHS Compliant
- Moisture Sensitivity Level MSL1

Applications:

- Bluetooth, BLE, Zigbee, WiFi
- 2.4GHz ISM band radios

All dimensions are in mm / inches

Issue: 1946

RoHS COMPLIANT

In the effort to improve our products, we reserve the right to make changes judged to be necessary.
CONFIDENTIAL AND PROPRIETARY INFORMATION
This document contains confidential and proprietary information of Pulse Electronics, Inc. (Pulse) and is protected by copyright, trade secret and other state and federal laws. Its receipt or possession does not convey any rights to reproduce, disclose its contents, or to manufacture, use or sell anything it may describe. Reproduction, disclosure or use without specific written authorization of Pulse is strictly forbidden.

For more information:

Pulse Worldwide Headquarters
15255 Innovation Drive #100
San Diego, CA 92128
USA
Tel:1-858-674-8100

Pulse/Larsen Antennas
18110 SE 34th St Bldg 2 Suite 250
Vancouver, WA 98683
USA
Tel: 1-360-944-7551

Europe Headquarters
Pulse GmbH & Do, KG
Zeppelinstrasse 15
Herrenberg, Germany
Tel: 49 7032 7806 0

Pulse (Suzhou) Wireless Products Co, Inc.
99 Huo Ju Road(#29 Bldg,4th Phase
Suzhou New District
Jiangsu Province, Suzhou 215009 PR China
Tel: 86 512 6807 9998

chanhvinh.com

Pulse | LARSEN Antennas
A YAGEO Company

TECHNICAL DATA SHEET

Description: 2.4-2.4835GHz Ceramic SMT antenna, 4x6.25mm keep out area

Series: Chip Antenna

PART NUMBER: W3008C

ELECTRICAL SPECIFICATIONS

Frequency	2400-2483.5MHz
Nominal Impedance	50 Ω
Return Loss	-8dB
Radiation Pattern	Omni
Gain	1.3dBi
Efficiency	68%
Polarization	Linear
Power Withstanding	5W

MECHANICAL SPECIFICATIONS

Weight	0.03 g
Overall Length	3.2 [0.126] MM [INCHES]
Over all width	1.6 [0.063] MM [INCHES]
Over all thickness	1.1 [0.043] MM [INCHES]
MSL (Moisture Sensitivity Level)	1

ENVIRONMENTAL SPECIFICATIONS

Operating Temperature	-40~+85° C
Storage Temperature	-40~+85° C
RoHS Compliant	Yes

(*) All RF parameters measured on 80*37mm PCB with 4*6.25mm clearance in free space. No matching component used.

In the effort to improve our products, we reserve the right to make changes judged to be necessary.
CONFIDENTIAL AND PROPRIETARY INFORMATION
This document contains confidential and proprietary information of Pulse Electronics, Inc. (Pulse) and is protected by copyright, trade secret and other state and federal laws. Its receipt or possession does not convey any rights to reproduce, disclose its contents, or to manufacture, use or sell anything it may describe. Reproduction, disclosure or use without specific written authorization of Pulse is strictly forbidden.

RoHS COMPLIANT

chanhvinh.com

Pulse | LARSEN Antennas
A YAGEO Company

TECHNICAL DATA SHEET

Description: 2.4-2.4835GHz Ceramic SMT antenna, 4x6.25mm keep out area

Series: Chip Antenna

PART NUMBER: W3008C

MECHANICAL DRAWING

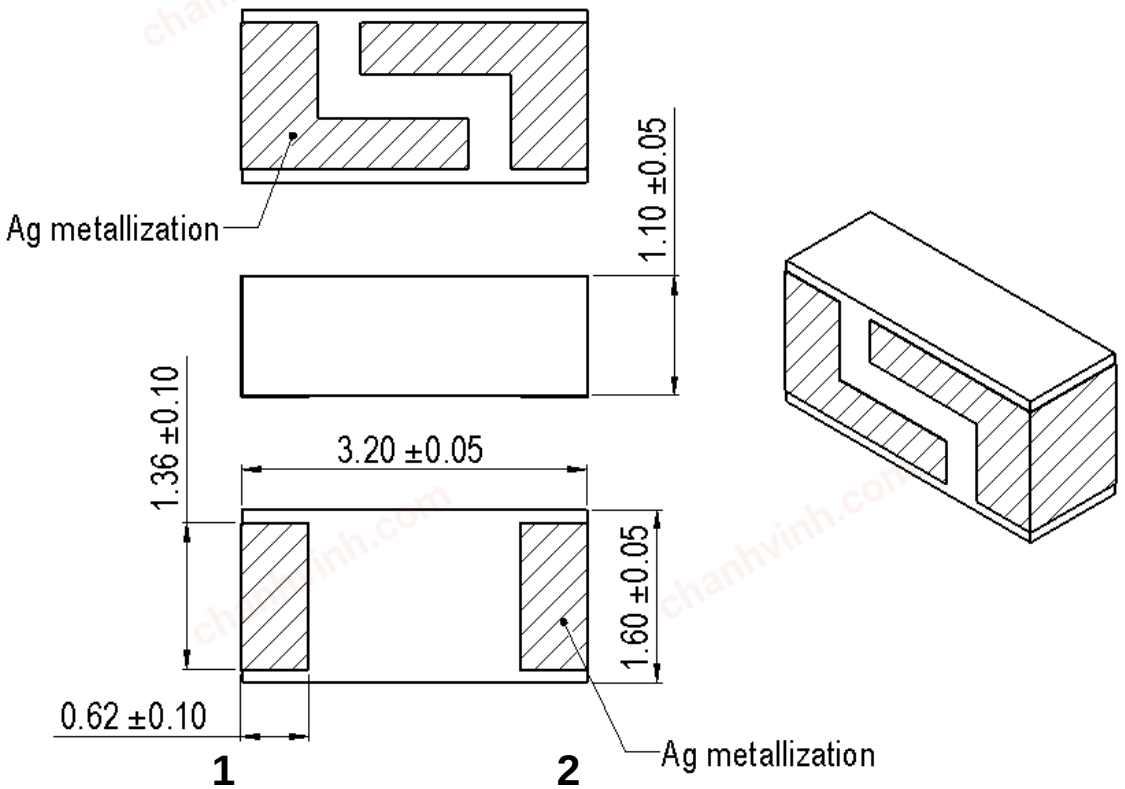

No.	Terminal Name	Terminal Dimensions
1	Feed /GND	0.62 x 1.36 mm
2	Feed /GND	0.62 x 1.36 mm
Antenna is symmetrical, either one of pads 1 or 2 can be used as feed terminal		

Note: This type of antenna is called loaded PIFA. One pad (on the bottom of the ceramic chip antenna) that feedline and GND are connected is a basic PIFA antenna structure. And, another pad on the other side that only GND is connected is for capacitive loading. Loaded capacitive value is optimized by the gap distance between two pads on the top surface. In PIFA, there is short mechanism usually in proximity to feed. This RF shorting affects impedance and current distribution mechanism of antenna. The actual antenna top face can seem to be mirrored, however it can be used same as the non-mirrored version. Please follow the design recommendation specified in this data sheet for either case.

In the effort to improve our products, we reserve the right to make changes judged to be necessary.
CONFIDENTIAL AND PROPRIETARY INFORMATION
This document contains confidential and proprietary information of Pulse Electronics, Inc. (Pulse) and is protected by copyright, trade secret and other state and federal laws. Its receipt or possession does not convey any rights to reproduce, disclose its contents, or to manufacture, use or sell anything it may describe. Reproduction, disclosure or use without specific written authorization of Pulse is strictly forbidden.

RoHS COMPLIANT

chanhvinh.com

Pulse | LARSEN Antennas
A YAGEO Company

TECHNICAL DATA SHEET

Description: 2.4-2.4835GHz Ceramic SMT antenna, 4x6.25mm keep out area

Series: Chip Antenna

PART NUMBER: W3008C

MECHANICAL DRAWING AND TERMINAL CONFIGURATION

Ground cleared under antenna, clearance area 4 mm x 6.25mm

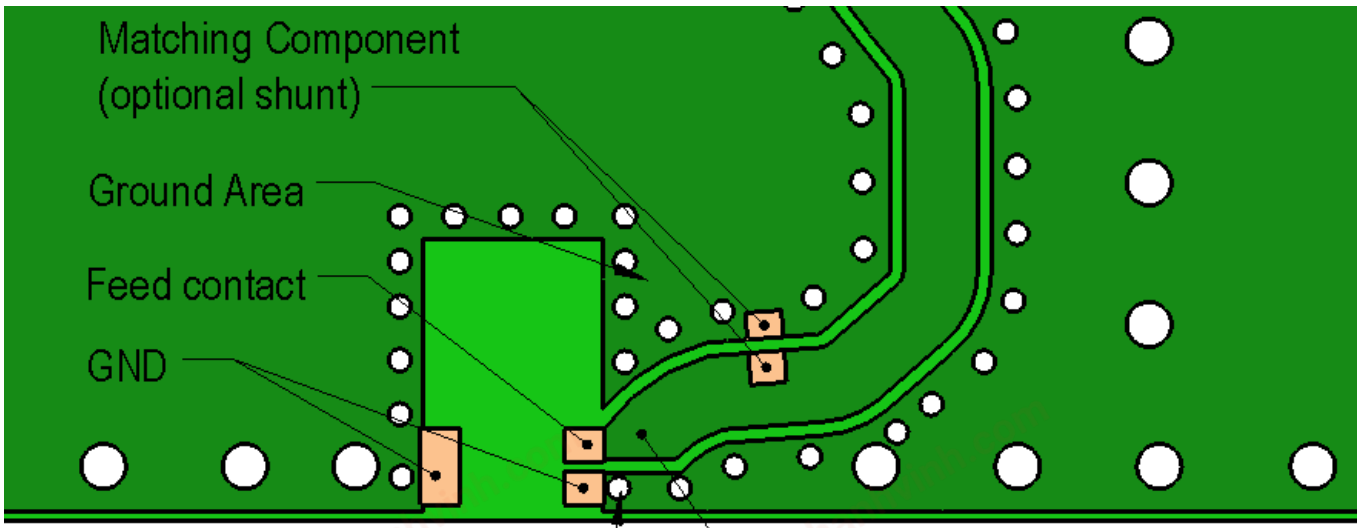

Ground Via Hole
Ground area should be surround with ground via holes

Feed line 50Ohm
Any type of 50 Ohm feed line can be used. inner layers on feed line area need to designed to give 50 Ohm characteristics to feed line.

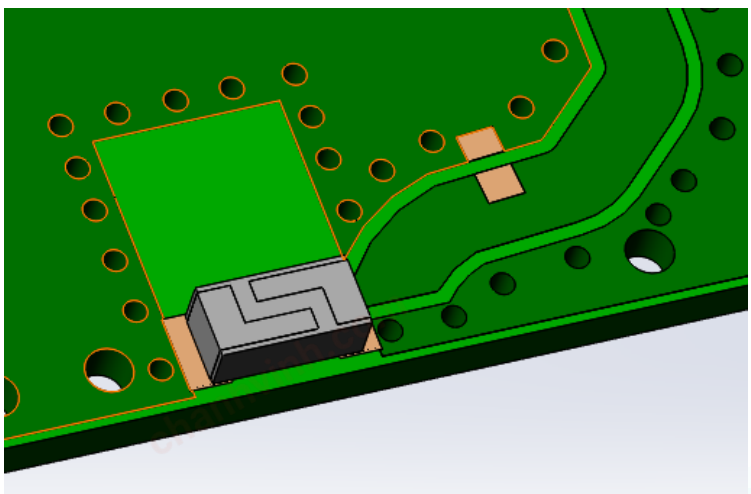

In the effort to improve our products, we reserve the right to make changes judged to be necessary.
CONFIDENTIAL AND PROPRIETARY INFORMATION
This document contains confidential and proprietary information of Pulse Electronics, Inc. (Pulse) and is protected by copyright, trade secret and other state and federal laws. Its receipt or possession does not convey any rights to reproduce, disclose its contents, or to manufacture, use or sell anything it may describe. Reproduction, disclosure or use without specific written authorization of Pulse is strictly forbidden.

RoHS COMPLIANT

chanhvinh.com

Pulse | LARSEN Antennas
A YAGEO Company

TECHNICAL DATA SHEET

Description: 2.4-2.4835GHz Ceramic SMT antenna, 4x6.25mm keep out area

Series: Chip Antenna

PART NUMBER: W3008C

MECHANICAL DRAWING AND TERMINAL CONFIGURATION

Recommended Antenna Pad Dimensions on PCB Layout (top surface)
Ground cleared under antenna, clearance area 4 mm x 6.25 mm

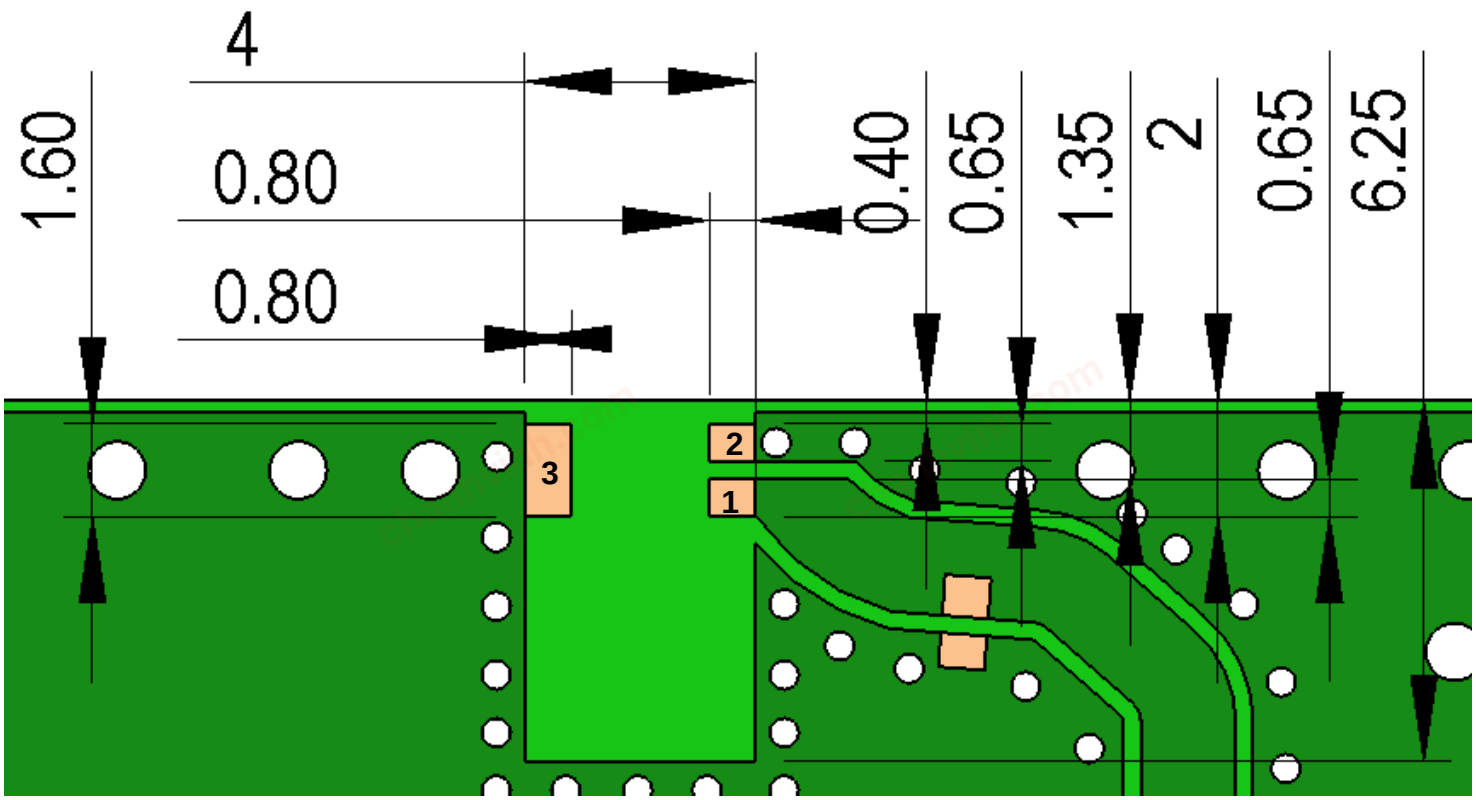

PCB contact pads		
No.	Terminal Name	Terminal Dimensions
1	Feed	0,80 x 0,65 mm
2	GND	0,80 x 0,65 mm
3	GND	0,80 x 1,60 mm

In the effort to improve our products, we reserve the right to make changes judged to be necessary.
CONFIDENTIAL AND PROPRIETARY INFORMATION
This document contains confidential and proprietary information of Pulse Electronics, Inc. (Pulse) and is protected by copyright, trade secret and other state and federal laws. Its receipt or possession does not convey any rights to reproduce, disclose its contents, or to manufacture, use or sell anything it may describe. Reproduction, disclosure or use without specific written authorization of Pulse is strictly forbidden.

RoHS COMPLIANT

chanhvinh.com

Pulse | LARSEN Antennas
A YAGEO Company

TECHNICAL DATA SHEET

Description: 2.4-2.4835GHz Ceramic SMT antenna, 4x6.25mm keep out area

Series: Chip Antenna

PART NUMBER: W3008C

MECHANICAL DRAWING AND TERMINAL CONFIGURATION

Recommended Antenna Pad Dimensions on PCB Layout (bottom surface)
Ground cleared under antenna, clearance area 4 mm x 6.25 mm

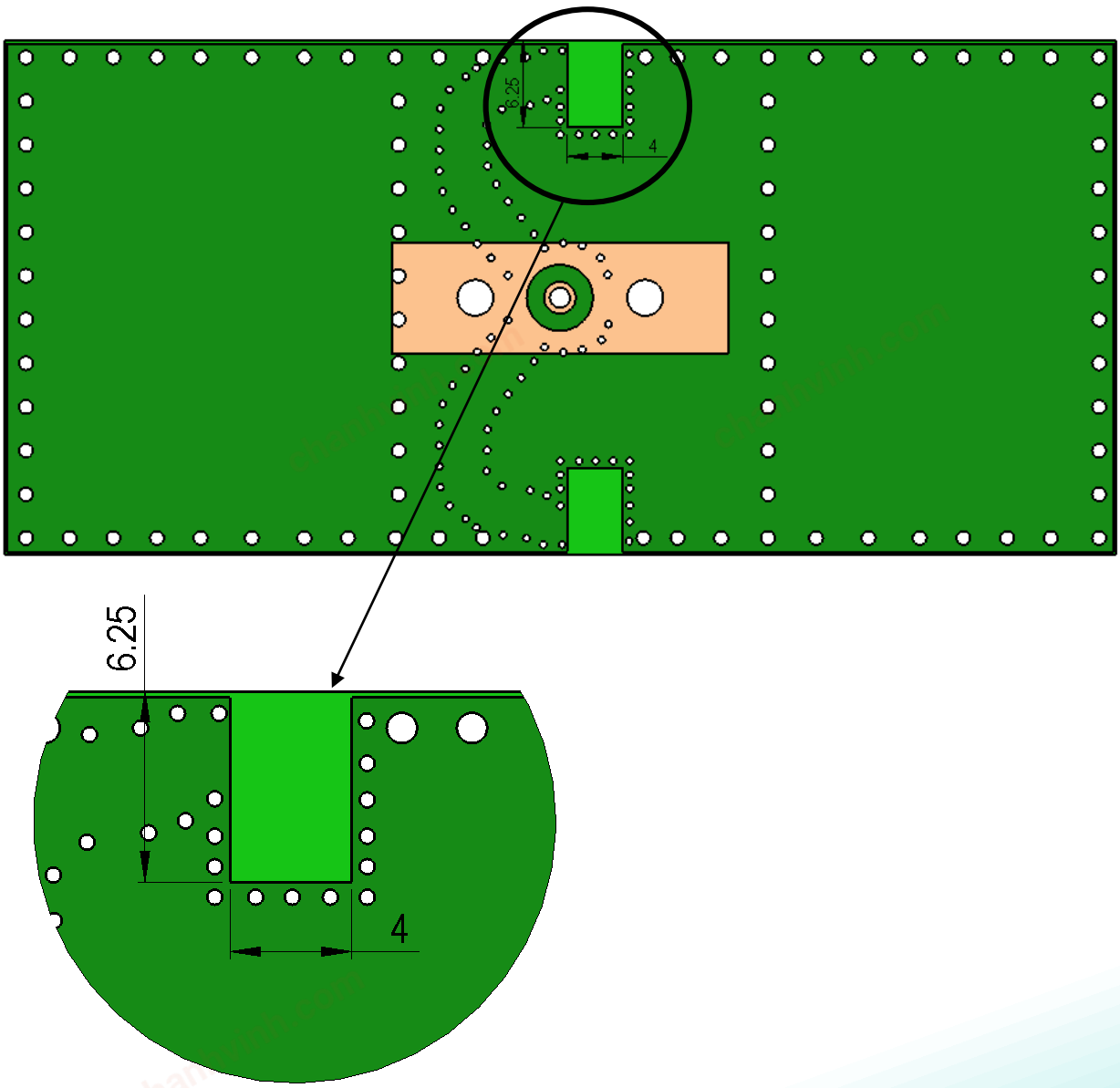

In the effort to improve our products, we reserve the right to make changes judged to be necessary.
CONFIDENTIAL AND PROPRIETARY INFORMATION
This document contains confidential and proprietary information of Pulse Electronics, Inc. (Pulse) and is protected by copyright, trade secret and other state and federal laws. Its receipt or possession does not convey any rights to reproduce, disclose its contents, or to manufacture, use or sell anything it may describe. Reproduction, disclosure or use without specific written authorization of Pulse is strictly forbidden.

RoHS COMPLIANT

chanhvinh.com

Pulse | LARSEN Antennas
A YAGEO Company

TECHNICAL DATA SHEET

Description: 2.4-2.4835GHz Ceramic SMT antenna, 4x6.25mm keep out area

Series: Chip Antenna

PART NUMBER: W3008C

MECHANICAL DRAWING AND TERMINAL CONFIGURATION

Recommended test board layout for electrical characteristic measurement, test board outline size 80 x 37mm

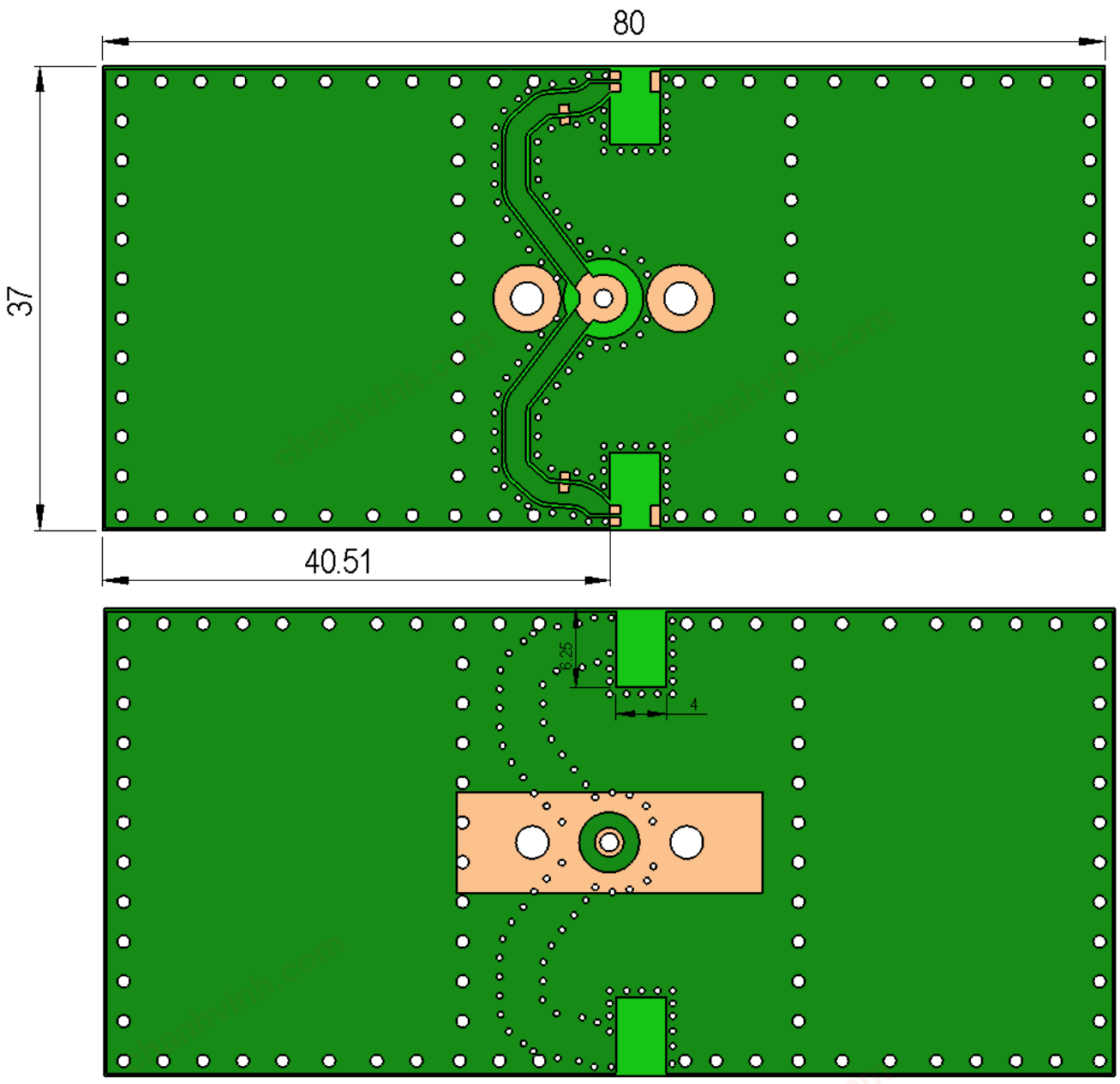

In the effort to improve our products, we reserve the right to make changes judged to be necessary.
CONFIDENTIAL AND PROPRIETARY INFORMATION
This document contains confidential and proprietary information of Pulse Electronics, Inc. (Pulse) and is protected by copyright, trade secret and other state and federal laws. Its receipt or possession does not convey any rights to reproduce, disclose its contents, or to manufacture, use or sell anything it may describe. Reproduction, disclosure or use without specific written authorization of Pulse is strictly forbidden.

RoHS COMPLIANT

chanhvinh.com

Pulse | LARSEN Antennas
A YAGEO Company

TECHNICAL DATA SHEET

Description: 2.4-2.4835GHz Ceramic SMT antenna, 4x6.25mm keep out area

Series: Chip Antenna

PART NUMBER: W3008C

CHARTS

Return loss

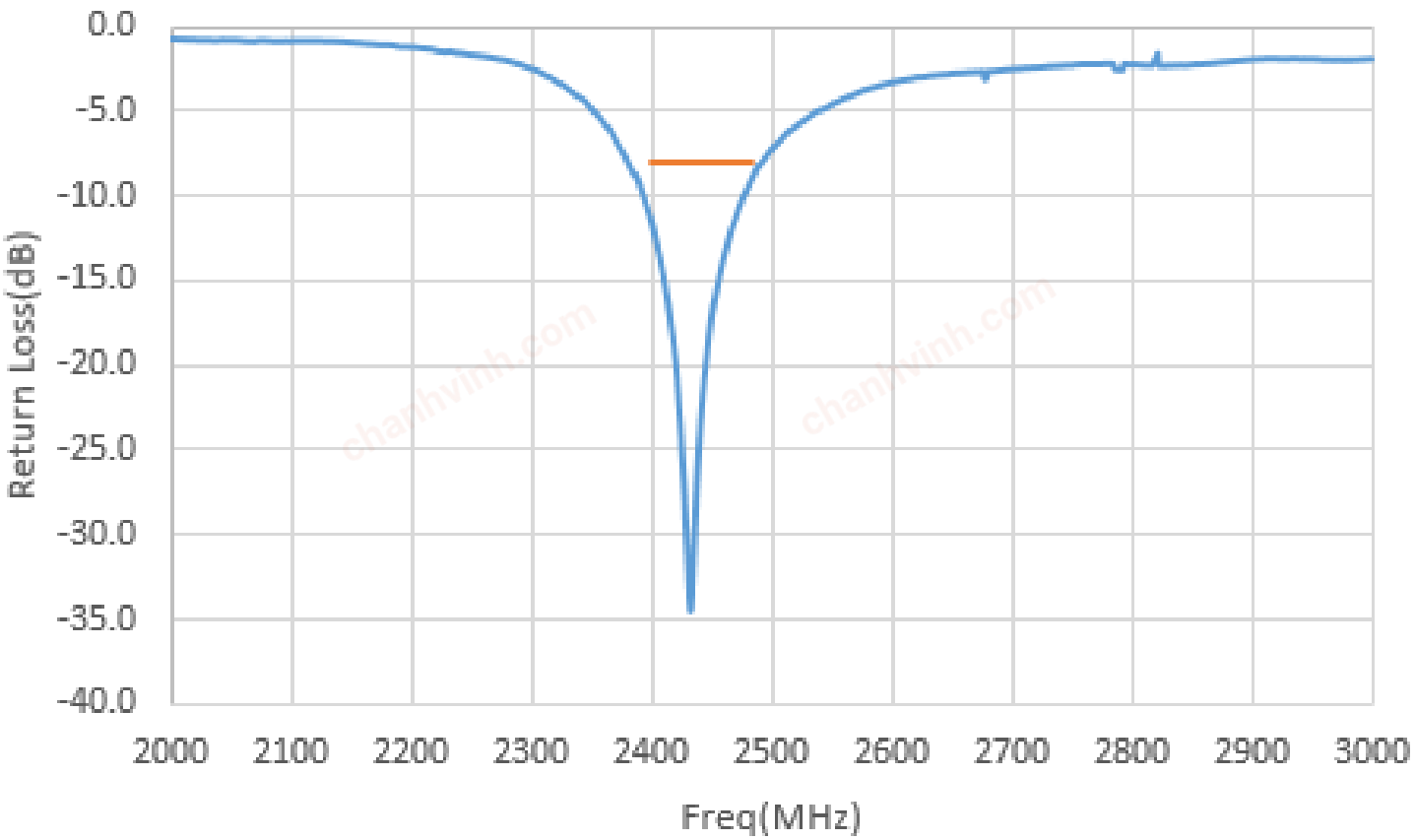

(*) All RF parameters measured on 80*37mm PCB with 4*6.25mm clearance in free space. No matching component used.

In the effort to improve our products, we reserve the right to make changes judged to be necessary.
CONFIDENTIAL AND PROPRIETARY INFORMATION
This document contains confidential and proprietary information of Pulse Electronics, Inc. (Pulse) and is protected by copyright, trade secret and other state and federal laws. Its receipt or possession does not convey any rights to reproduce, disclose its contents, or to manufacture, use or sell anything it may describe. Reproduction, disclosure or use without specific written authorization of Pulse is strictly forbidden.

RoHS COMPLIANT

chanhvinh.com

Pulse | LARSEN Antennas
A YAGEO Company

TECHNICAL DATA SHEET

Description: 2.4-2.4835GHz Ceramic SMT antenna, 4x6.25mm keep out area

Series: Chip Antenna

PART NUMBER: W3008C

CHARTS

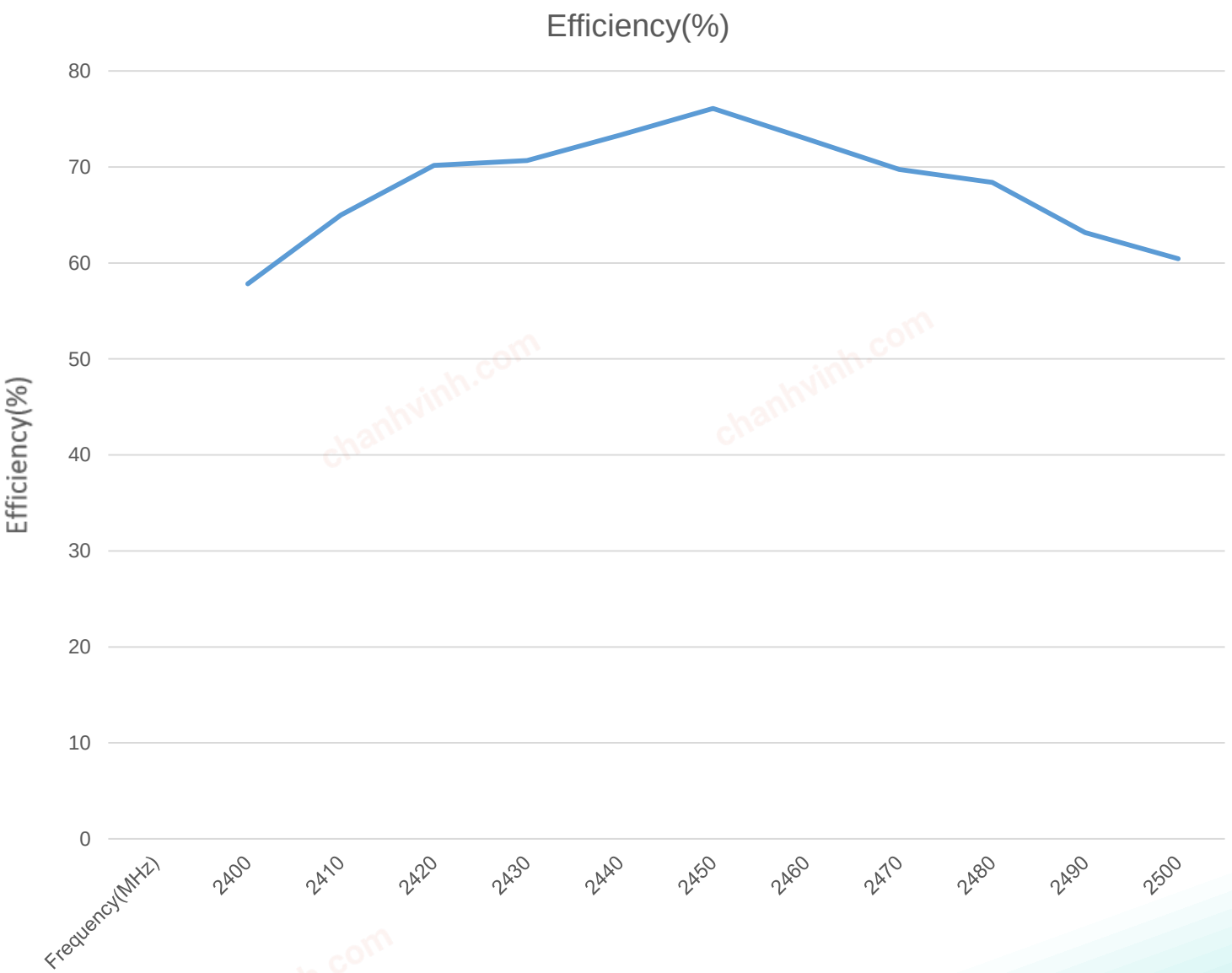

(*) All RF parameters measured on 80*37mm PCB with 4*6.25mm clearance in free space. No matching component used.

Issue: 1946

In the effort to improve our products, we reserve the right to make changes judged to be necessary.
CONFIDENTIAL AND PROPRIETARY INFORMATION
This document contains confidential and proprietary information of Pulse Electronics, Inc. (Pulse) and is protected by copyright, trade secret and other state and federal laws. Its receipt or possession does not convey any rights to reproduce, disclose its contents, or to manufacture, use or sell anything it may describe. Reproduction, disclosure or use without specific written authorization of Pulse is strictly forbidden.

RoHS COMPLIANT

chanhvinh.com

Pulse | LARSEN Antennas
A YAGEO Company

TECHNICAL DATA SHEET

Description: 2.4-2.4835GHz Ceramic SMT antenna, 4x6.25mm keep out area

Series: Chip Antenna

PART NUMBER: W3008C

CHARTS

Peak Gain(dBi)

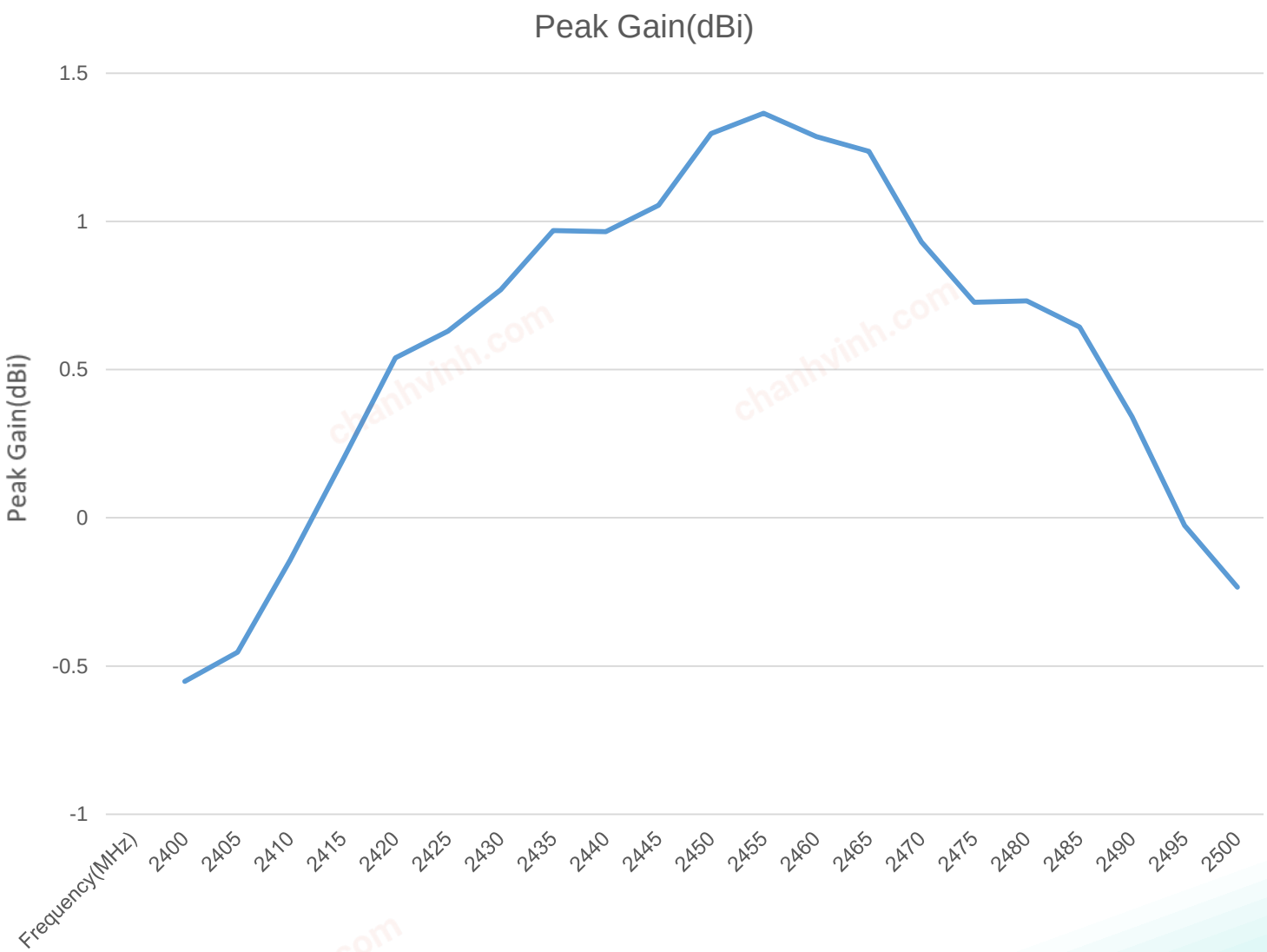

(*) All RF parameters measured on 80*37mm PCB with 4*6.25mm clearance in free space. No matching component used.

In the effort to improve our products, we reserve the right to make changes judged to be necessary.
CONFIDENTIAL AND PROPRIETARY INFORMATION
This document contains confidential and proprietary information of Pulse Electronics, Inc. (Pulse) and is protected by copyright, trade secret and other state and federal laws. Its receipt or possession does not convey any rights to reproduce, disclose its contents, or to manufacture, use or sell anything it may describe. Reproduction, disclosure or use without specific written authorization of Pulse is strictly forbidden.

RoHS COMPLIANT

chanhvinh.com

Pulse | LARSEN Antennas
A YAGEO Company

TECHNICAL DATA SHEET

Description: 2.4-2.4835GHz Ceramic SMT antenna, 4x6.25mm keep out area

Series: Chip Antenna

PART NUMBER: W3008C

CHARTS

Free Space Radiation Pattern

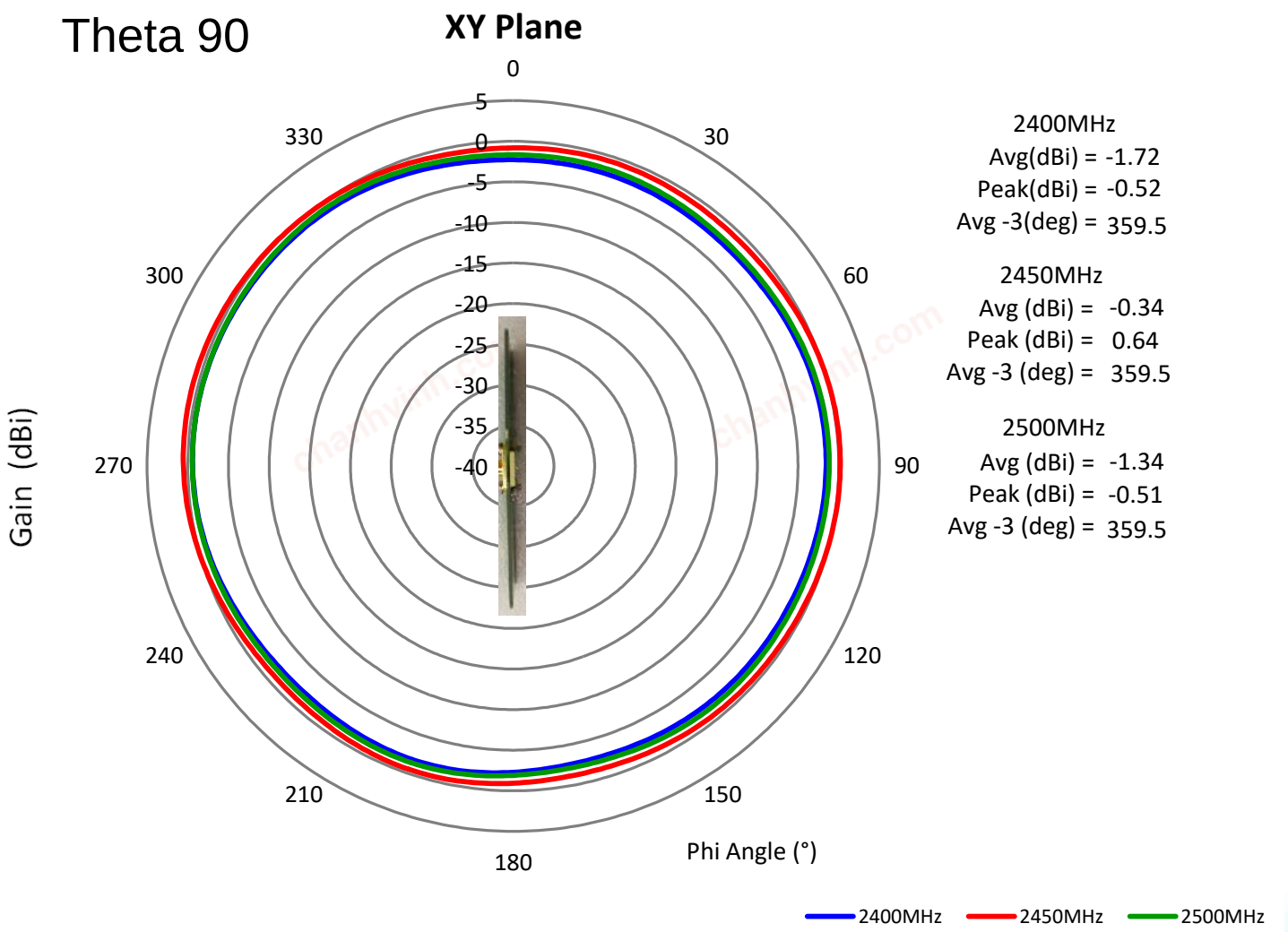

(*) All RF parameters measured on 80*37mm PCB with 4*6.25mm clearance in free space. No matching component used.

In the effort to improve our products, we reserve the right to make changes judged to be necessary.
CONFIDENTIAL AND PROPRIETARY INFORMATION
This document contains confidential and proprietary information of Pulse Electronics, Inc. (Pulse) and is protected by copyright, trade secret and other state and federal laws. Its receipt or possession does not convey any rights to reproduce, disclose its contents, or to manufacture, use or sell anything it may describe. Reproduction, disclosure or use without specific written authorization of Pulse is strictly forbidden.

RoHS COMPLIANT

chanhvinh.com

Pulse | LARSEN Antennas
A YAGEO Company

TECHNICAL DATA SHEET

Description: 2.4-2.4835GHz Ceramic SMT antenna, 4x6.25mm keep out area

Series: Chip Antenna

PART NUMBER: W3008C

CHARTS

Free Space Radiation Pattern

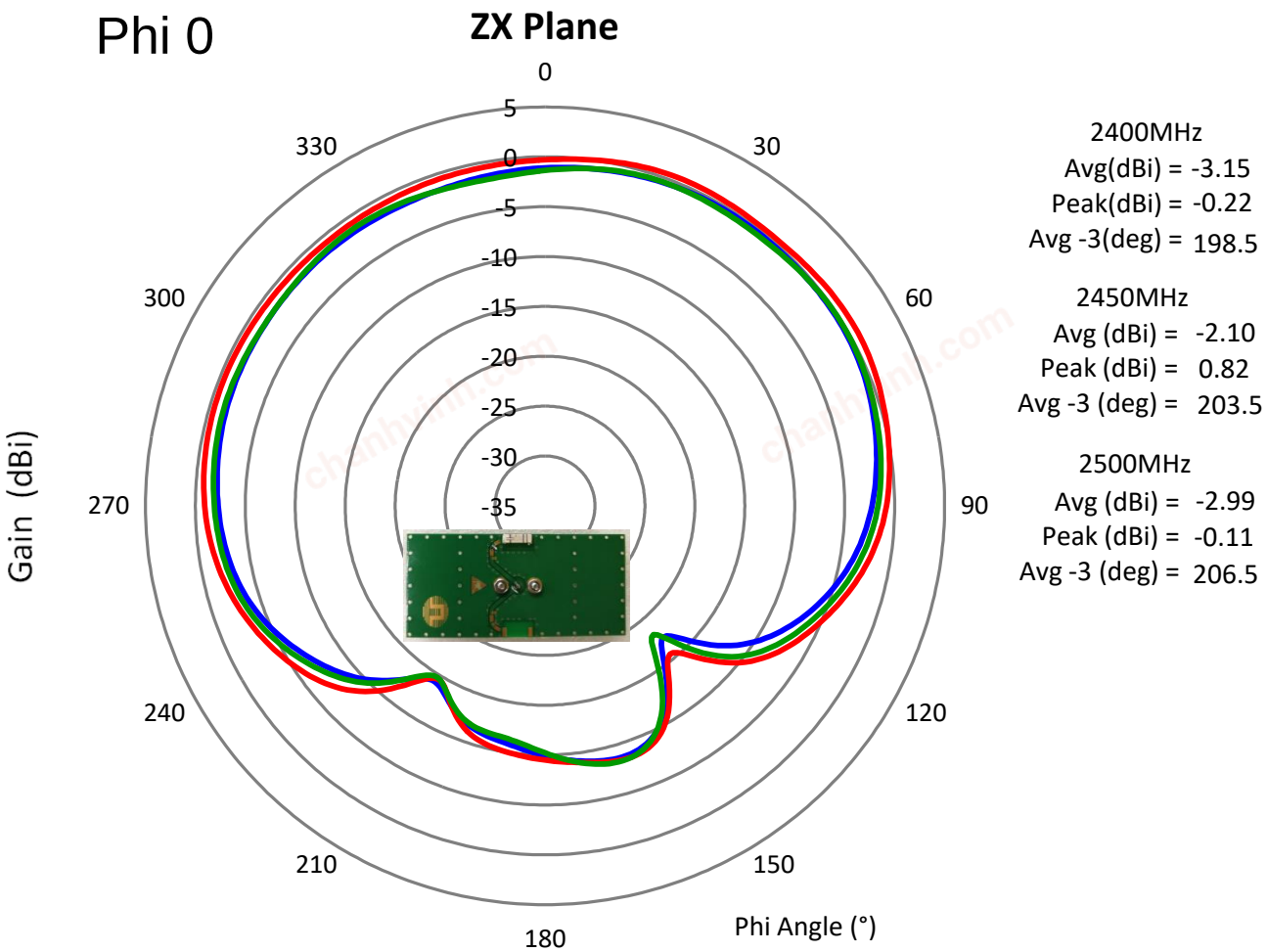

2400MHz
Avg(dBi) = -3.15
Peak(dBi) = -0.22
Avg -3(deg) = 198.5

2450MHz
Avg (dBi) = -2.10
Peak (dBi) = 0.82
Avg -3 (deg) = 203.5

2500MHz
Avg (dBi) = -2.99
Peak (dBi) = -0.11
Avg -3 (deg) = 206.5

(*) All RF parameters measured on 80*37mm PCB with 4*6.25mm clearance in free space. No matching component used.

In the effort to improve our products, we reserve the right to make changes judged to be necessary.
CONFIDENTIAL AND PROPRIETARY INFORMATION
This document contains confidential and proprietary information of Pulse Electronics, Inc. (Pulse) and is protected by copyright, trade secret and other state and federal laws. Its receipt or possession does not convey any rights to reproduce, disclose its contents, or to manufacture, use or sell anything it may describe. Reproduction, disclosure or use without specific written authorization of Pulse is strictly forbidden.

RoHS COMPLIANT

chanhvinh.com

Pulse | LARSEN Antennas
A YAGEO Company

TECHNICAL DATA SHEET

Description: 2.4-2.4835GHz Ceramic SMT antenna, 4x6.25mm keep out area

Series: Chip Antenna

PART NUMBER: W3008C

CHARTS

Free Space Radiation Pattern

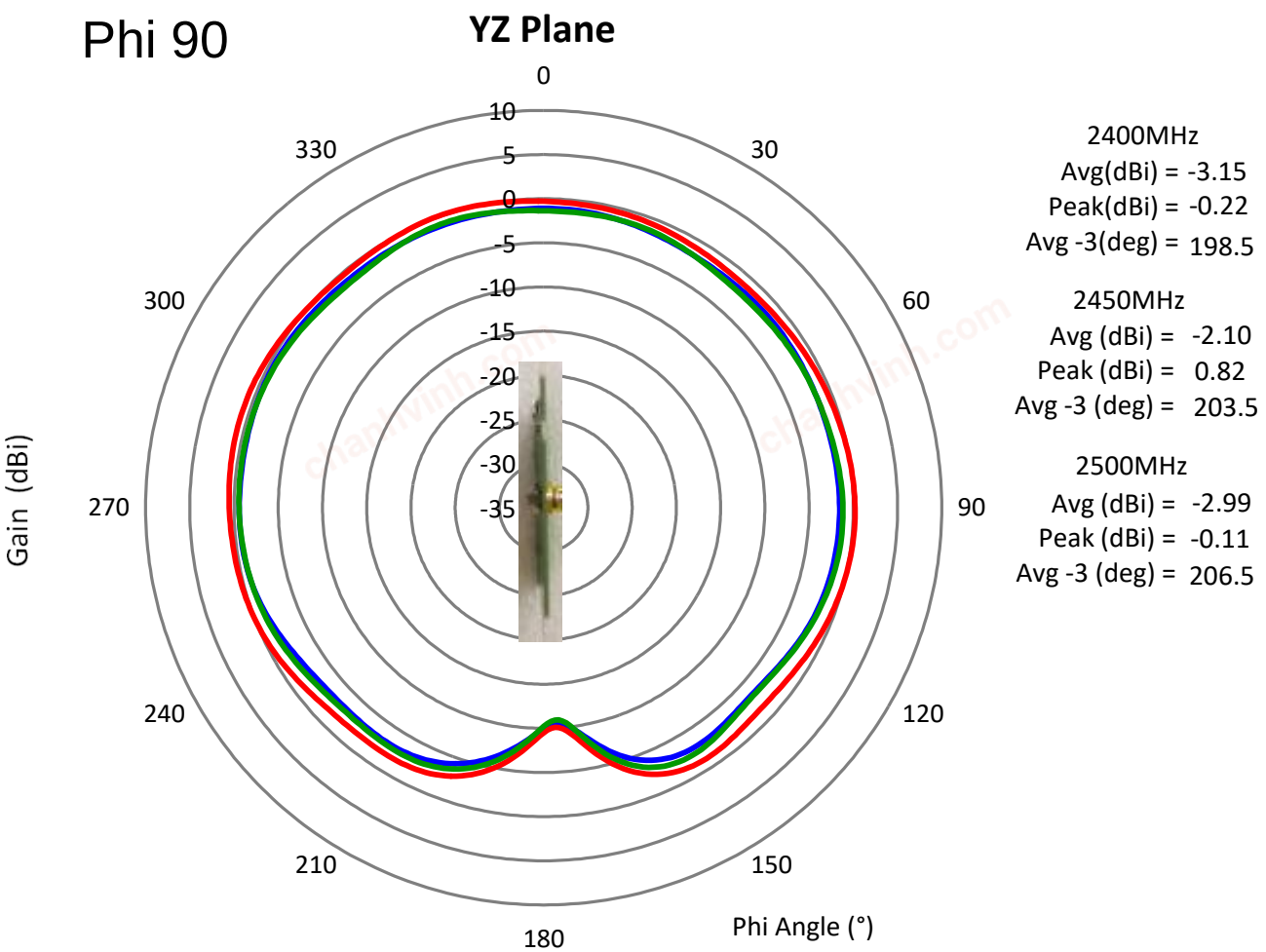

(*) All RF parameters measured on 80*37mm PCB with 4*6.25mm clearance in free space. No matching component used.

In the effort to improve our products, we reserve the right to make changes judged to be necessary.
CONFIDENTIAL AND PROPRIETARY INFORMATION
This document contains confidential and proprietary information of Pulse Electronics, Inc. (Pulse) and is protected by copyright, trade secret and other state and federal laws. Its receipt or possession does not convey any rights to reproduce, disclose its contents, or to manufacture, use or sell anything it may describe. Reproduction, disclosure or use without specific written authorization of Pulse is strictly forbidden.

RoHS COMPLIANT

chanhvinh.com

Description: 2.4-2.4835GHz Ceramic SMT antenna, 4x6.25mm keep out area

Series: Chip Antenna

PART NUMBER: W3008C

Recommendation for reflow soldering process

Printing stencil thickness 0,15 - 0,25 mm is recommended for the solder paste. The maximum soldering temperature should not exceed 260°C. The temperature profile recommendations for reflow soldering process is presented in the Figures 1 and 2. The reflow profile presented in figure 1 describes minimum reflow temperatures. The reflow profile presented in figure 2 describes maximum reflow temperatures. located at the center of the coverage area.

	Method of heat transfer	Controlled hot air convection
1	Average temperature gradient in preheating	2.5 °C/s
2	Soak time	2-3 minutes
3	Max temperature gradient in reflow	3 °C/s
4	Time above 217 °C	Max 30 sec
5	Peak temperature in reflow	230 °C for 10 seconds
6	Temperature gradient in cooling	Max -5 °C/s

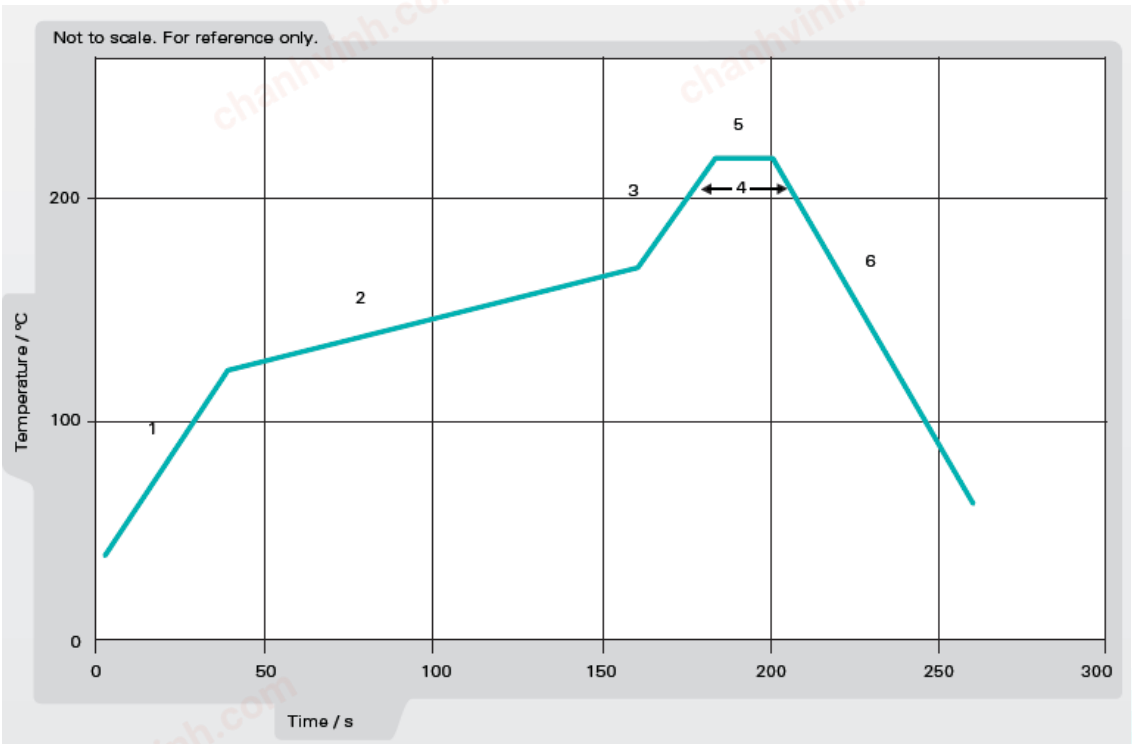

Figure 1. Minimum temperature profile recommendation for reflow soldering process

In the effort to improve our products, we reserve the right to make changes judged to be necessary.
CONFIDENTIAL AND PROPRIETARY INFORMATION
This document contains confidential and proprietary information of Pulse Electronics, Inc. (Pulse) and is protected by copyright, trade secret and other state and federal laws. Its receipt or possession does not convey any rights to reproduce, disclose its contents, or to manufacture, use or sell anything it may describe. Reproduction, disclosure or use without specific written authorization of Pulse is strictly forbidden.

chanhvinh.com

Pulse | LARSEN Antennas
A YAGEO Company

TECHNICAL DATA SHEET

Description: 2.4-2.4835GHz Ceramic SMT antenna, 4x6.25mm keep out area

Series: Chip Antenna

PART NUMBER: W3008C

Recommendation for reflow soldering process

	Method of heat transfer	Controlled hot air convection
1	Average temperature gradient in preheating	2.5 °C/s
2	Soak time	2-3 minutes
3	Max temperature gradient in reflow	3 °C/s
4	Time above 217 °C	Max 60 sec
5	Time above 230 °C	Max 50 sec
6	Time above 250 °C	Max 10 sec
7	Peak temperature in reflow	260 °C for 5 seconds
8	Temperature gradient in cooling	Max -5 °C/s

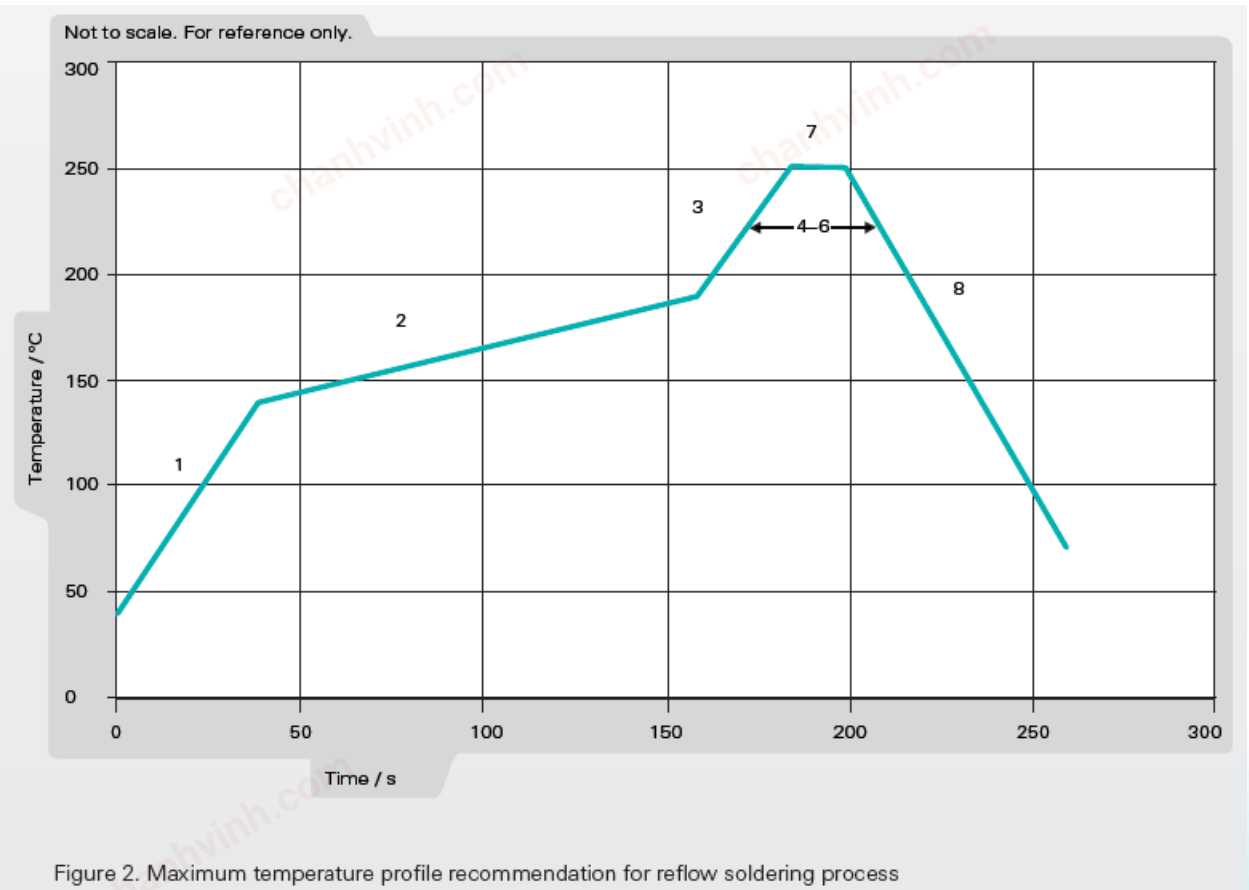

Figure 2. Maximum temperature profile recommendation for reflow soldering process

In the effort to improve our products, we reserve the right to make changes judged to be necessary.
CONFIDENTIAL AND PROPRIETARY INFORMATION
This document contains confidential and proprietary information of Pulse Electronics, Inc. (Pulse) and is protected by copyright, trade secret and other state and federal laws. Its receipt or possession does not convey any rights to reproduce, disclose its contents, or to manufacture, use or sell anything it may describe. Reproduction, disclosure or use without specific written authorization of Pulse is strictly forbidden.

RoHS COMPLIANT

chanhvinh.com

Pulse | LARSEN Antennas
A YAGEO Company

TECHNICAL DATA SHEET

Description: 2.4-2.4835GHz Ceramic SMT antenna, 4x6.25mm keep out area

Series: Chip Antenna

PART NUMBER: W3008C

PACKAGING-1

3000pcs antennas per 7” reel

5pcs 7” reel per inner package box

2pcs inner box per out box

Total 30000pcs antenna per out box

Out box size: 390mmx215mmx165mm

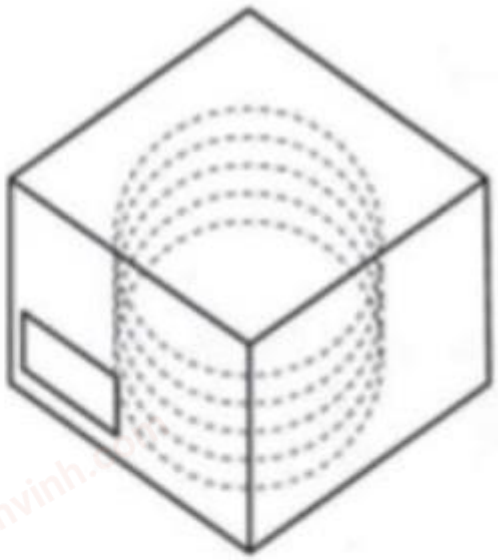





LEVEL

NOT MOISTURE SENSITIVE 1

These Devices do not require special storage conditions provided:

1. They are maintained at conditions equal to or less than 30℃ and 85% RH.
2. They are solder reflowed at a peak body temperture which does not exceed 260℃.

Note: Level and body temperture defined by IPC/JEDEC J-STD-020

Issue: 1946

In the effort to improve our products, we reserve the right to make changes judged to be necessary.
CONFIDENTIAL AND PROPRIETARY INFORMATION
This document contains confidential and proprietary information of Pulse Electronics, Inc. (Pulse) and is protected by copyright, trade secret and other state and federal laws. Its receipt or possession does not convey any rights to reproduce, disclose its contents, or to manufacture, use or sell anything it may describe. Reproduction, disclosure or use without specific written authorization of Pulse is strictly forbidden.

RoHS COMPLIANT

chanhvinh.com

Pulse | LARSEN Antennas
A YAGEO Company

TECHNICAL DATA SHEET

Description: 2.4-2.4835GHz Ceramic SMT antenna, 4x6.25mm keep out area

Series: Chip Antenna

PART NUMBER: W3008C

PACKAGING-2

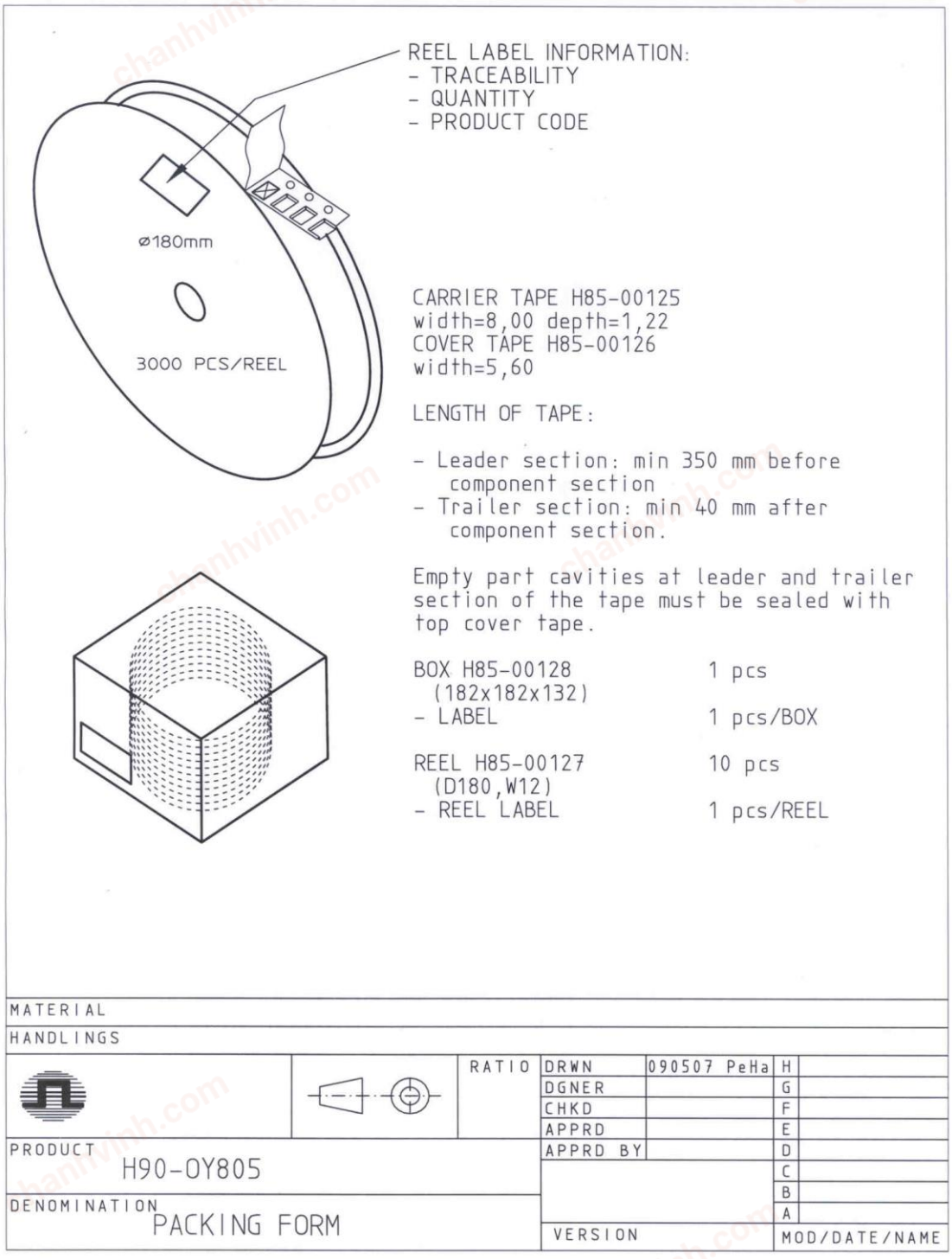

Issue: 1946

In the effort to improve our products, we reserve the right to make changes judged to be necessary.
CONFIDENTIAL AND PROPRIETARY INFORMATION
This document contains confidential and proprietary information of Pulse Electronics, Inc. (Pulse) and is protected by copyright, trade secret and other state and federal laws. Its receipt or possession does not convey any rights to reproduce, disclose its contents, or to manufacture, use or sell anything it may describe. Reproduction, disclosure or use without specific written authorization of Pulse is strictly forbidden.

RoHS COMPLIANT