chanhvinh.com

Pulse
a YAGEO company

TECHNICAL DATA SHEET

Description: 2.4-2.5/5.15-7.125GHz Dual band Ceramic 10x3.2x1.5mm

Series: Chip Antenna

PART NUMBER: W3006



Features:

- 2.4-2.5 / 5.15-7.125GHz WIFi-6E
- Peak gain 2.2 / 5.2 dBi
- Efficiency 60 / 70 %
- Compact size W x L x H (10 x 3.2 x 1.5 mm)
- Low weight: 240 mg
- Fully SMD compatible
- Tape and reel packing
- RoHS Compliant Product
- Moisture Sensitivity Level: MSL1

Applications:

- Layout 1 for 2.4-2.5 / 5.15-5.85GHz
- Layout 2 for 2.4-2.5 / 5.15-7.125GHz

- IEEE 802.11a/b/g/n/x
- WiFi-6E
- 5 GHz WLAN
- 2.4 GHz WLAN
- 2.4 GHz ISM Band Systems
- 5GHz ISM Band Systems
- ZigBee IEEE 802.15.4

All dimensions are in inches/mm

Issue: 2108

RoHS COMPLIANT

In the effort to improve our products, we reserve the right to make changes judged to be necessary.
CONFIDENTIAL AND PROPRIETARY INFORMATION
This document contains confidential and proprietary information of Pulse Electronics, Inc. (Pulse) and is protected by copyright, trade secret and other state and federal laws. Its receipt or possession does not convey any rights to reproduce, disclose its contents, or to manufacture, use or sell anything it may describe. Reproduction, disclosure or use without specific written authorization of Pulse is strictly forbidden.

For more information:

Pulse Worldwide Headquarters
15255 Innovation Drive #100
San Diego, CA 92128
USA
Tel:1-858-674-8100

Pulse/Larsen Antennas
18110 SE 34th St Bldg 2 Suite 250
Vancouver, WA 98683
USA
Tel: 1-360-944-7551

Europe Headquarters
Pulse GmbH & Do, KG
Zeppelinstrasse 15
Herrenberg, Germany
Tel: 49 7032 7806 0

Pulse (Suzhou) Wireless Products Co, Inc.
99 Huo Ju Road(#29 Bldg,4th Phase
Suzhou New District
Jiangsu Province, Suzhou 215009 PR China
Tel: 86 512 6807 9998

chanhvinh.com

Pulse
a YAGEO company

TECHNICAL DATA SHEET

Description: 2.4-2.5/5.15-7.125GHz Dual band Ceramic 10x3.2x1.5mm

Series: Chip Antenna

PART NUMBER: W3006

ELECTRICAL SPECIFICATIONS

Layout and Matching for 2.4-2.5/5.15-5.85GHz

Frequency	2.4-2.5 / 5.15-5.85 GHz
Return Loss	-8 /-9 dB max
Efficiency (typical)	60 / 80 %
Peak Gain (typical)	1.8 / 4.5dBi

Layout and Matching for 2.4-2.5/5.15-7.125GHz WiFi-6E

Frequency	2.4-2.5 / 5.15-7.125 GHz
Return Loss	-5 /-5 dB max
Efficiency (typical)	65 / 75 %
Peak Gain (typical)	1.6 / 4.2dBi
Nominal Impedance	50Ω
Polarization	Linear
Interface	SMD mount ceramic antenna

In the effort to improve our products, we reserve the right to make changes judged to be necessary.
CONFIDENTIAL AND PROPRIETARY INFORMATION
This document contains confidential and proprietary information of Pulse Electronics, Inc. (Pulse) and is protected by copyright, trade secret and other state and federal laws. Its receipt or possession does not convey any rights to reproduce, disclose its contents, or to manufacture, use or sell anything it may describe. Reproduction, disclosure or use without specific written authorization of Pulse is strictly forbidden.

RoHS COMPLIANT

chanhvinh.com

Pulse
a YAGEO company

TECHNICAL DATA SHEET

Description: 2.4-2.5/5.15-7.125GHz Dual band Ceramic 10x3.2x1.5mm

Series: Chip Antenna

PART NUMBER: W3006

MECHANICAL SPECIFICATIONS

Weight	0.24g
Size	10 x 3.2 x 1.5 mm

ENVIRONMENTAL SPECIFICATIONS

Operating temperature	-40~+85° C
Temperature	-40~+85° C
Humidity	Cyclic 6 +25° C/+55° C 95%
Vibration	
Sinusoidal 2-8Hz	7.5 mm
Sinusoidal 8-200Hz	20 m/s²
Shocks	0.5 m/s
Salt mist	96 hours

In the effort to improve our products, we reserve the right to make changes judged to be necessary.
CONFIDENTIAL AND PROPRIETARY INFORMATION
This document contains confidential and proprietary information of Pulse Electronics, Inc. (Pulse) and is protected by copyright, trade secret and other state and federal laws. Its receipt or possession does not convey any rights to reproduce, disclose its contents, or to manufacture, use or sell anything it may describe. Reproduction, disclosure or use without specific written authorization of Pulse is strictly forbidden.

RoHS COMPLIANT

chanhvinh.com

Pulse
a YAGEO company

TECHNICAL DATA SHEET

Description: 2.4-2.5/5.15-7.125GHz Dual band Ceramic 10x3.2x1.5mm

Series: Chip Antenna

PART NUMBER: W3006

MECHANICAL DRAWING AND TERMINAL CONFIGURATION

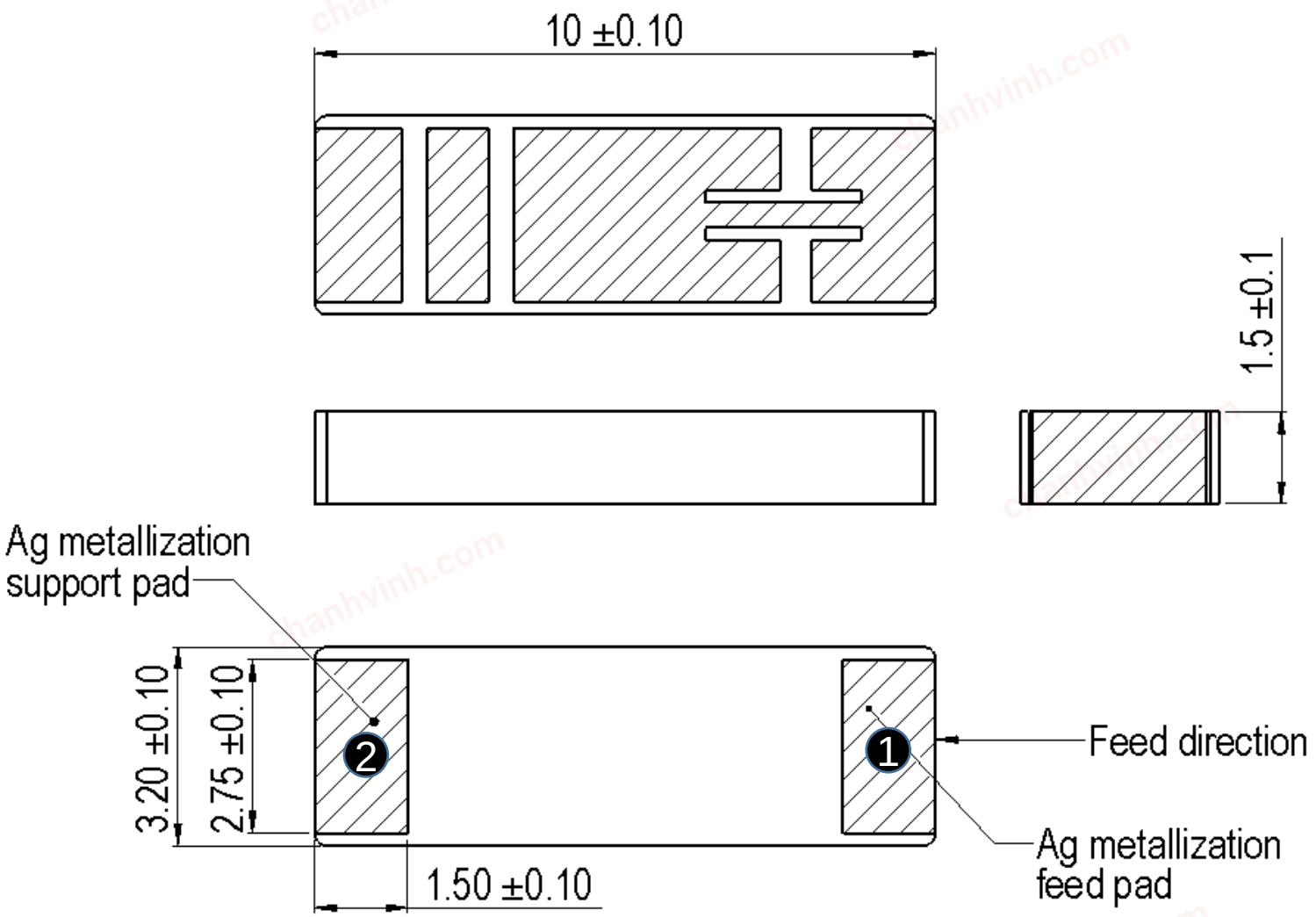

No.	Terminal Name	Terminal Dimensions
1	Feed	1.5 x 2.75 mm
2	Support pad	1.5 x 2.75 mm
Antenna feed pad can be identified by looking top surface metallization pattern		

In the effort to improve our products, we reserve the right to make changes judged to be necessary.
CONFIDENTIAL AND PROPRIETARY INFORMATION
This document contains confidential and proprietary information of Pulse Electronics, Inc. (Pulse) and is protected by copyright, trade secret and other state and federal laws. Its receipt or possession does not convey any rights to reproduce, disclose its contents, or to manufacture, use or sell anything it may describe. Reproduction, disclosure or use without specific written authorization of Pulse is strictly forbidden.

RoHS COMPLIANT

chanhvinh.com

Pulse
a YAGEO company

TECHNICAL DATA SHEET

Description: 2.4-2.5/5.15-7.125GHz Dual band Ceramic 10x3.2x1.5mm

Series: Chip Antenna

PART NUMBER: W3006

MECHANICAL DRAWING AND TERMINAL CONFIGURATION

Ground cleared under antenna

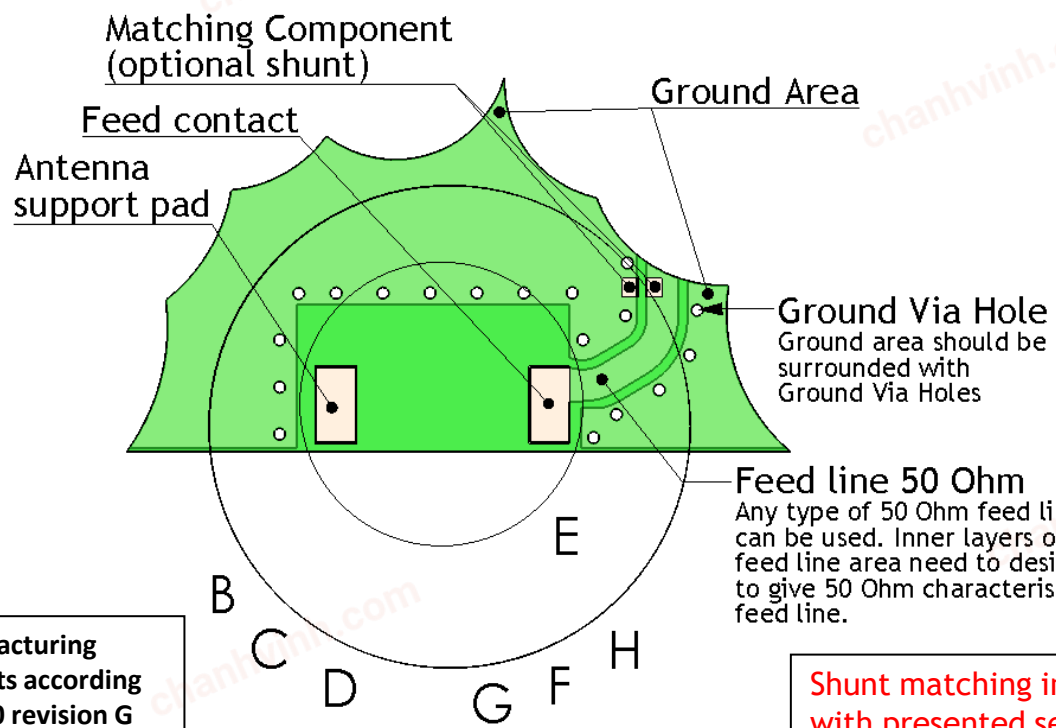

PWB manufacturing requirements according to IPC-A-600 revision G or similar

Shunt matching inductor, 1.5nH with presented setup. Same value for layout 1 and 2 reference boards.

Exact inductor value depends on specific application.

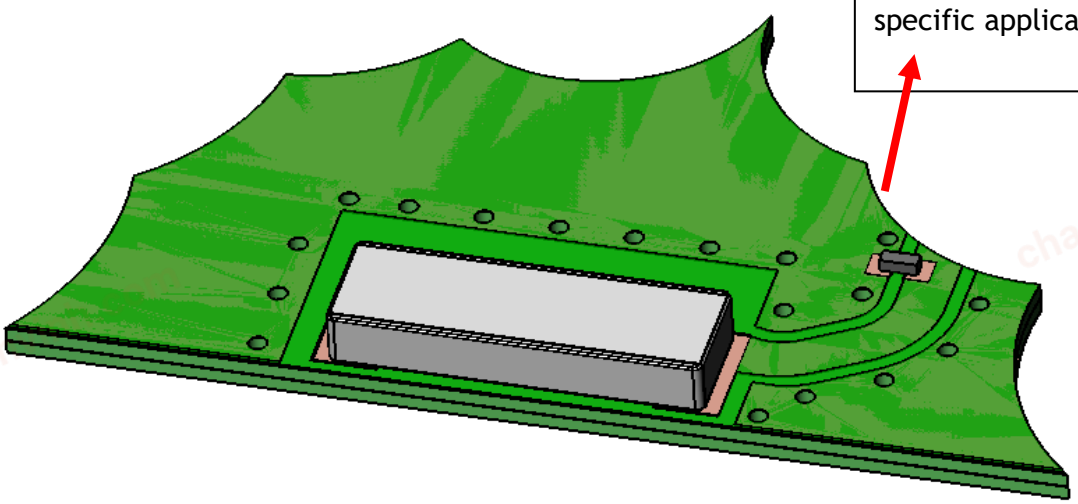

In the effort to improve our products, we reserve the right to make changes judged to be necessary.
CONFIDENTIAL AND PROPRIETARY INFORMATION
This document contains confidential and proprietary information of Pulse Electronics, Inc. (Pulse) and is protected by copyright, trade secret and other state and federal laws. Its receipt or possession does not convey any rights to reproduce, disclose its contents, or to manufacture, use or sell anything it may describe. Reproduction, disclosure or use without specific written authorization of Pulse is strictly forbidden.

RoHS COMPLIANT

chanhvinh.com

Pulse
a YAGEO company

TECHNICAL DATA SHEET

Description: 2.4-2.5/5.15-7.125GHz Dual band Ceramic 10x3.2x1.5mm

Series: Chip Antenna

PART NUMBER: W3006

MECHANICAL DRAWING AND TERMINAL CONFIGURATION

1.Layout and Matching for 2.4-2.5/5.15-5.85GHz

Ground clearance area (11.60 x 6.25 mm)

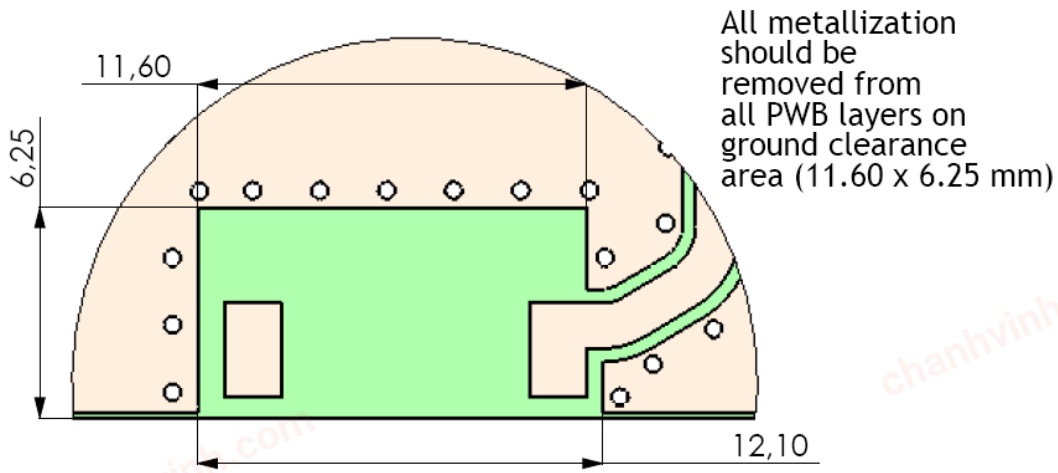

Opening in bottom/inner ground layers

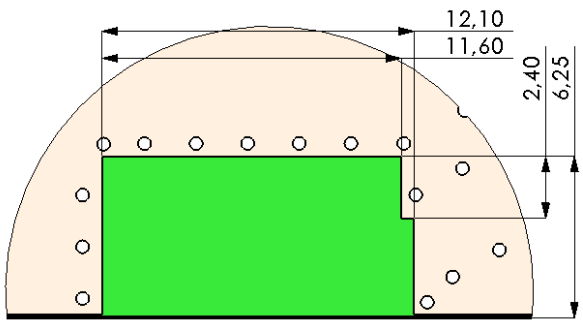

Opening in other layers (no ground/ RF)

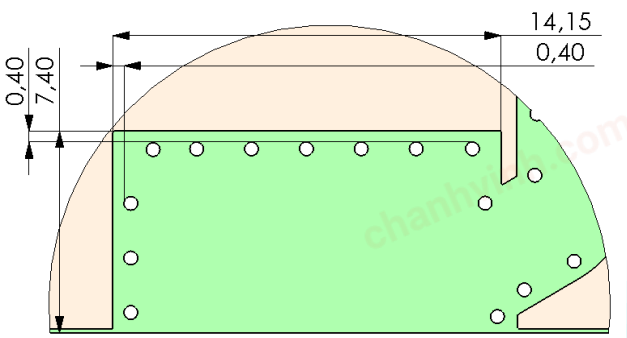

In the effort to improve our products, we reserve the right to make changes judged to be necessary.
CONFIDENTIAL AND PROPRIETARY INFORMATION
This document contains confidential and proprietary information of Pulse Electronics, Inc. (Pulse) and is protected by copyright, trade secret and other state and federal laws. Its receipt or possession does not convey any rights to reproduce, disclose its contents, or to manufacture, use or sell anything it may describe. Reproduction, disclosure or use without specific written authorization of Pulse is strictly forbidden.

RoHS COMPLIANT

chanhvinh.com

Pulse
a YAGEO company

TECHNICAL DATA SHEET

Description: 2.4-2.5/5.15-7.125GHz Dual band Ceramic 10x3.2x1.5mm

Series: Chip Antenna

PART NUMBER: W3006

MECHANICAL DRAWING AND TERMINAL CONFIGURATION

Recommended Antenna Pad Dimensions on PWB Layout (top surface)

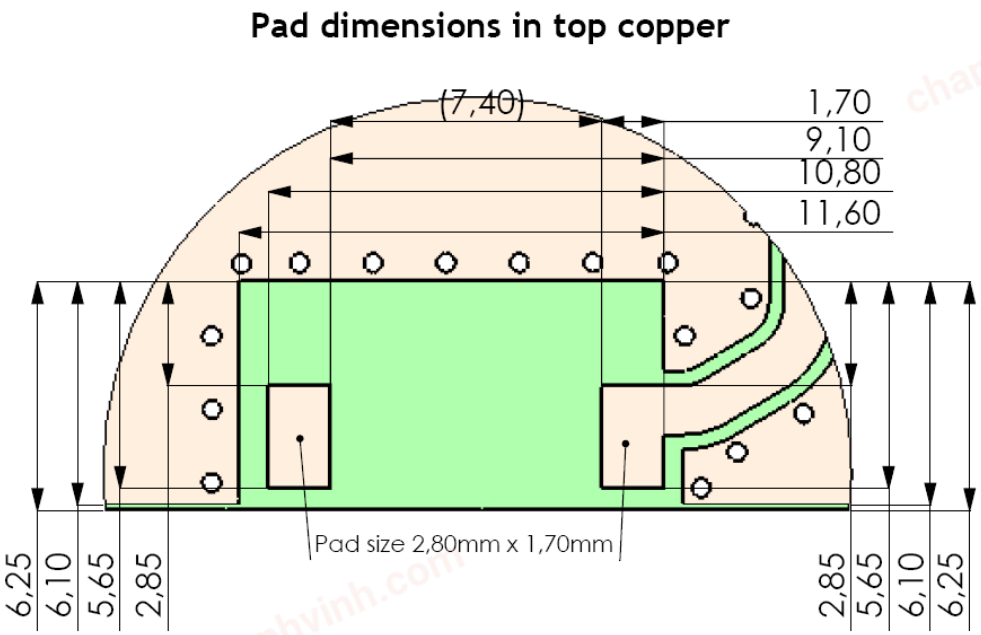

Recommended test board layout for electrical characteristic measurement, test board outline size 80 x 37mm

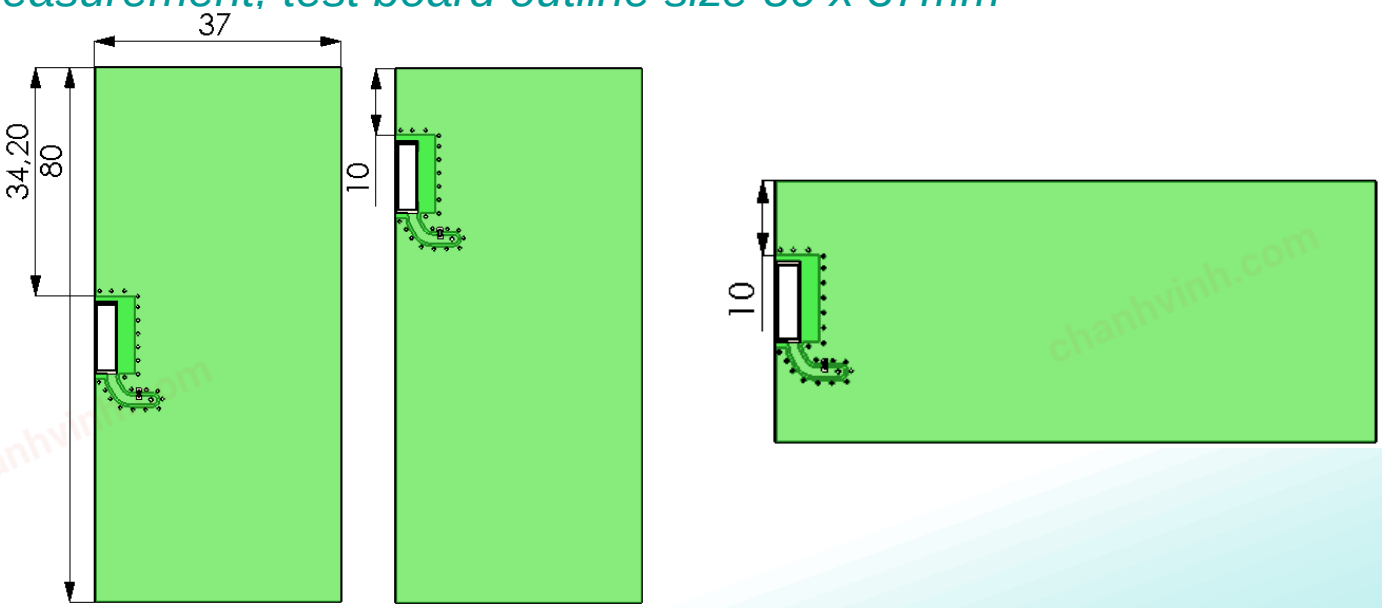

In the effort to improve our products, we reserve the right to make changes judged to be necessary.
CONFIDENTIAL AND PROPRIETARY INFORMATION
This document contains confidential and proprietary information of Pulse Electronics, Inc. (Pulse) and is protected by copyright, trade secret and other state and federal laws. Its receipt or possession does not convey any rights to reproduce, disclose its contents, or to manufacture, use or sell anything it may describe. Reproduction, disclosure or use without specific written authorization of Pulse is strictly forbidden.

RoHS COMPLIANT

chanhvinh.com

Pulse
a YAGEO company

TECHNICAL DATA SHEET

Description: 2.4-2.5/5.15-7.125GHz Dual band Ceramic 10x3.2x1.5mm

Series: Chip Antenna

PART NUMBER: W3006

MECHANICAL DRAWING AND TERMINAL CONFIGURATION

2.Layout and Matching for 2.4-2.5/5.15-7.125GHz

Ground clearance area (13.3 x 6.25 mm)

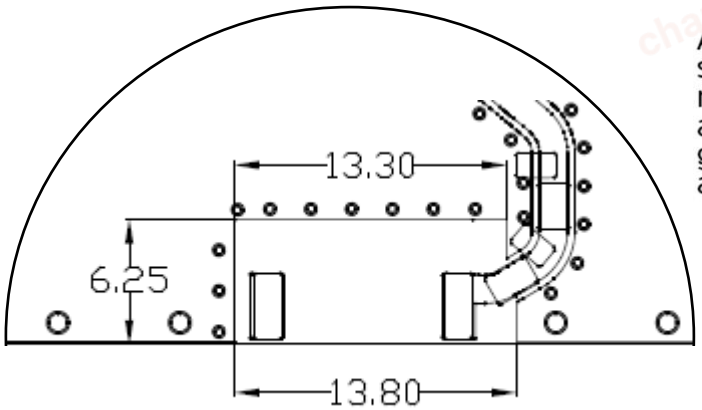

All metallization should be removed from all PWB layers on ground clearance area **(13.3 x 6.25mm)**

Opening in bottom/inner ground layers

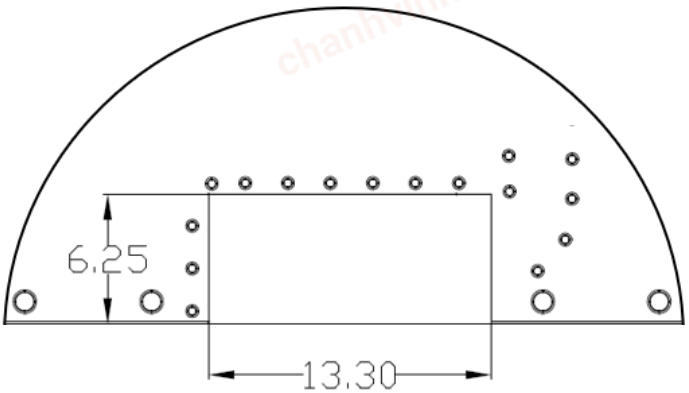

Opening in other layers (no ground/RF)

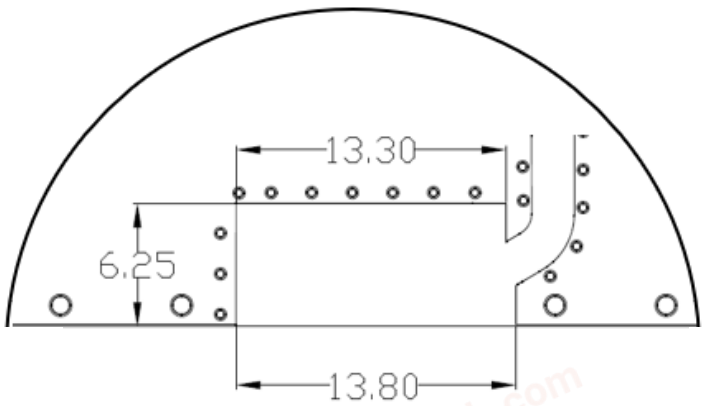

In the effort to improve our products, we reserve the right to make changes judged to be necessary.
CONFIDENTIAL AND PROPRIETARY INFORMATION
This document contains confidential and proprietary information of Pulse Electronics, Inc. (Pulse) and is protected by copyright, trade secret and other state and federal laws. Its receipt or possession does not convey any rights to reproduce, disclose its contents, or to manufacture, use or sell anything it may describe. Reproduction, disclosure or use without specific written authorization of Pulse is strictly forbidden.

RoHS COMPLIANT

chanhvinh.com

Pulse
a YAGEO company

TECHNICAL DATA SHEET

Description: 2.4-2.5/5.15-7.125GHz Dual band Ceramic 10x3.2x1.5mm

Series: Chip Antenna

PART NUMBER: W3006

MECHANICAL DRAWING AND TERMINAL CONFIGURATION

Recommended Antenna Pad Dimensions on PWB Layout (top surface)

Pad dimensions in top copper

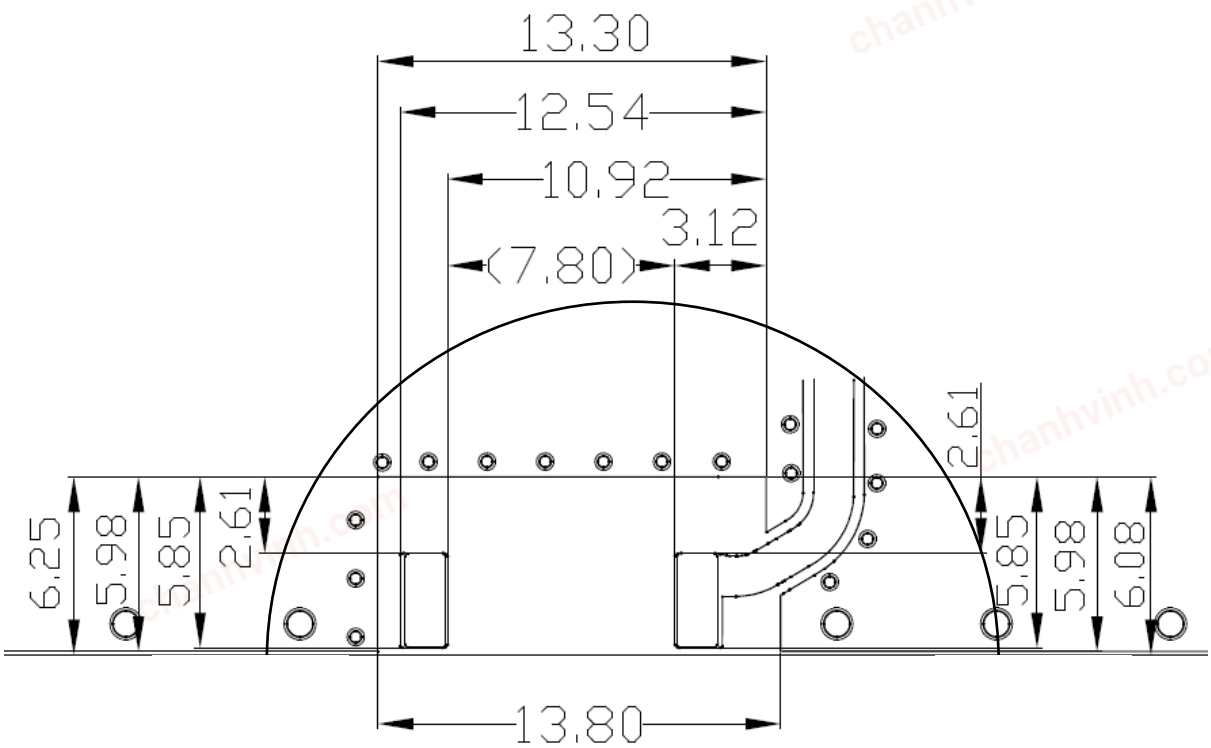

In the effort to improve our products, we reserve the right to make changes judged to be necessary.
CONFIDENTIAL AND PROPRIETARY INFORMATION
This document contains confidential and proprietary information of Pulse Electronics, Inc. (Pulse) and is protected by copyright, trade secret and other state and federal laws. Its receipt or possession does not convey any rights to reproduce, disclose its contents, or to manufacture, use or sell anything it may describe. Reproduction, disclosure or use without specific written authorization of Pulse is strictly forbidden.

RoHS COMPLIANT

chanhvinh.com

Pulse
a YAGEO company

TECHNICAL DATA SHEET

Description: 2.4-2.5/5.15-7.125GHz Dual band Ceramic 10x3.2x1.5mm

Series: Chip Antenna

PART NUMBER: W3006

Test setup

1. Layout and Matching for 2.4-2.5/5.15-5.85GHz

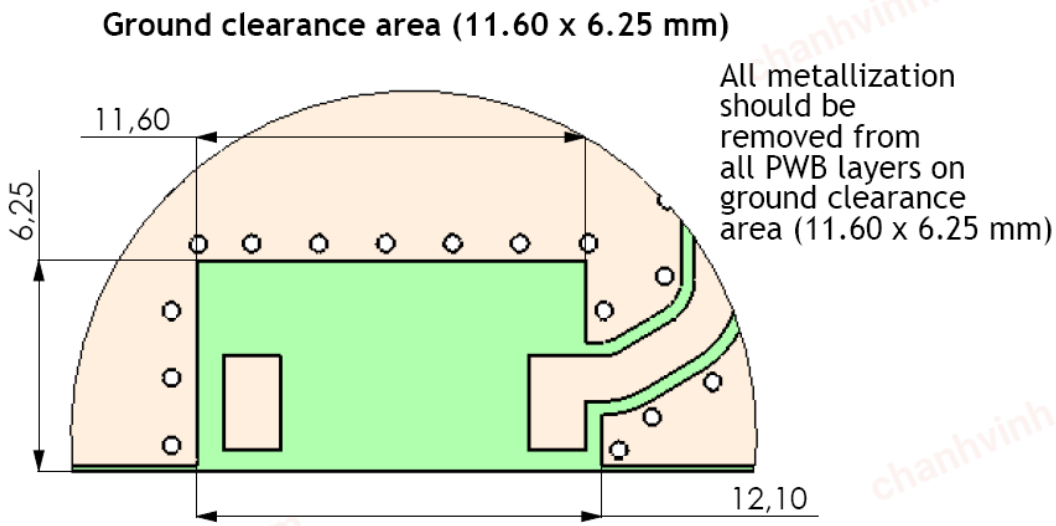

Return Loss

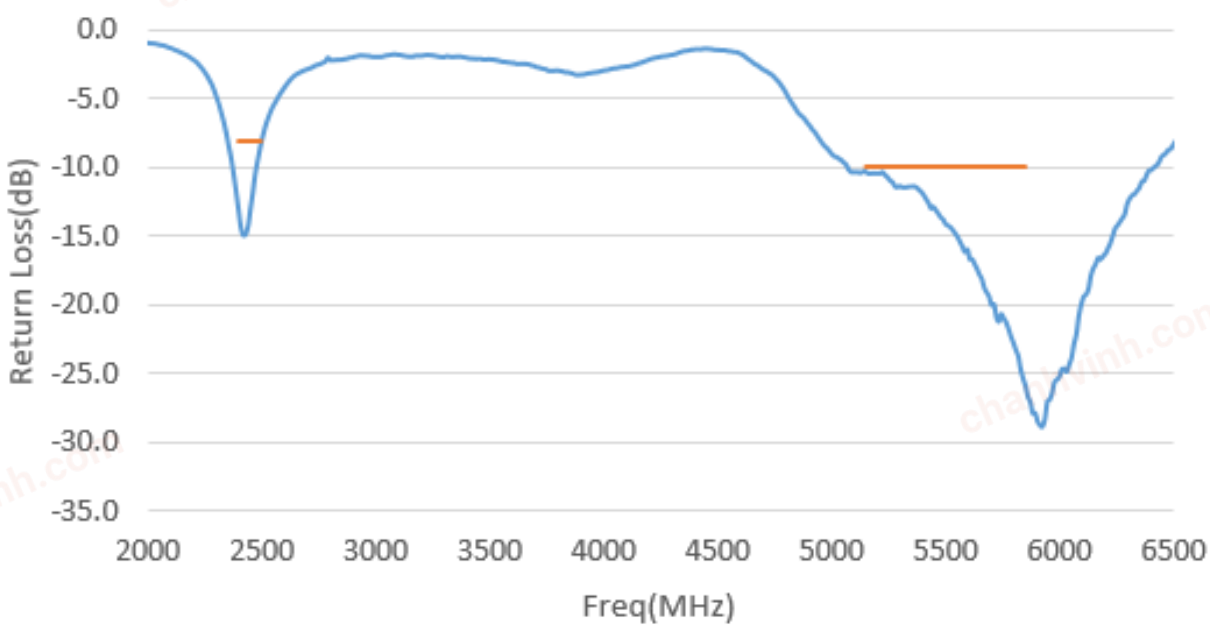

In the effort to improve our products, we reserve the right to make changes judged to be necessary.
CONFIDENTIAL AND PROPRIETARY INFORMATION
This document contains confidential and proprietary information of Pulse Electronics, Inc. (Pulse) and is protected by copyright, trade secret and other state and federal laws. Its receipt or possession does not convey any rights to reproduce, disclose its contents, or to manufacture, use or sell anything it may describe. Reproduction, disclosure or use without specific written authorization of Pulse is strictly forbidden.

RoHS COMPLIANT

chanhvinh.com

Pulse a YAGEO company

TECHNICAL DATA SHEET

Description: 2.4-2.5/5.15-7.125GHz Dual band Ceramic 10x3.2x1.5mm

Series: Chip Antenna

PART NUMBER: W3006

CHARTS

1. Layout and Matching for 2.4-2.5/5.15-5.85GHz

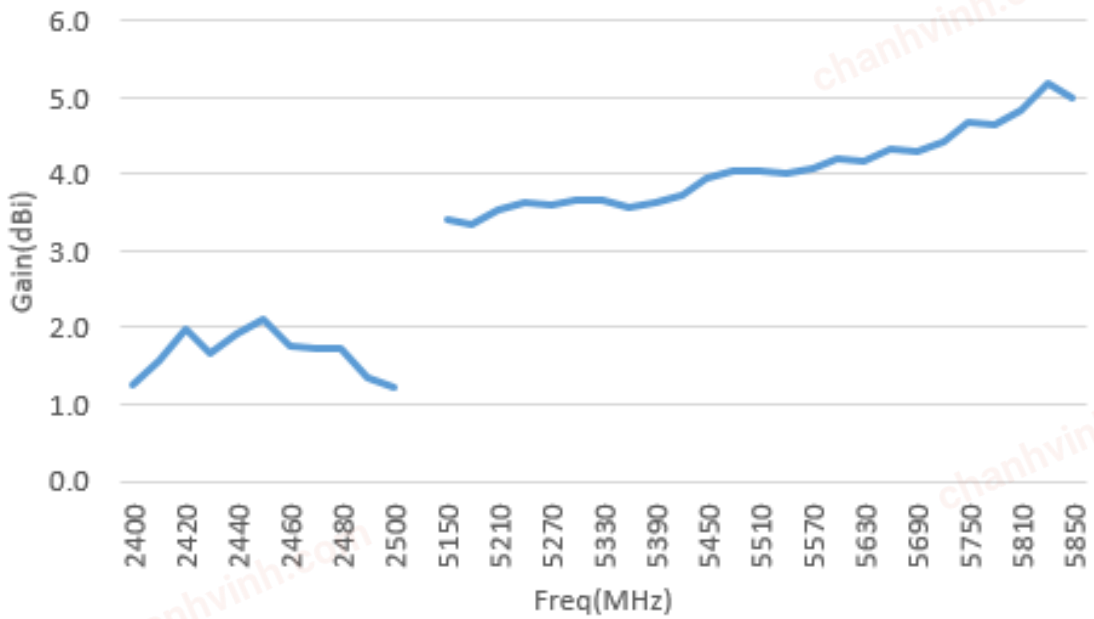

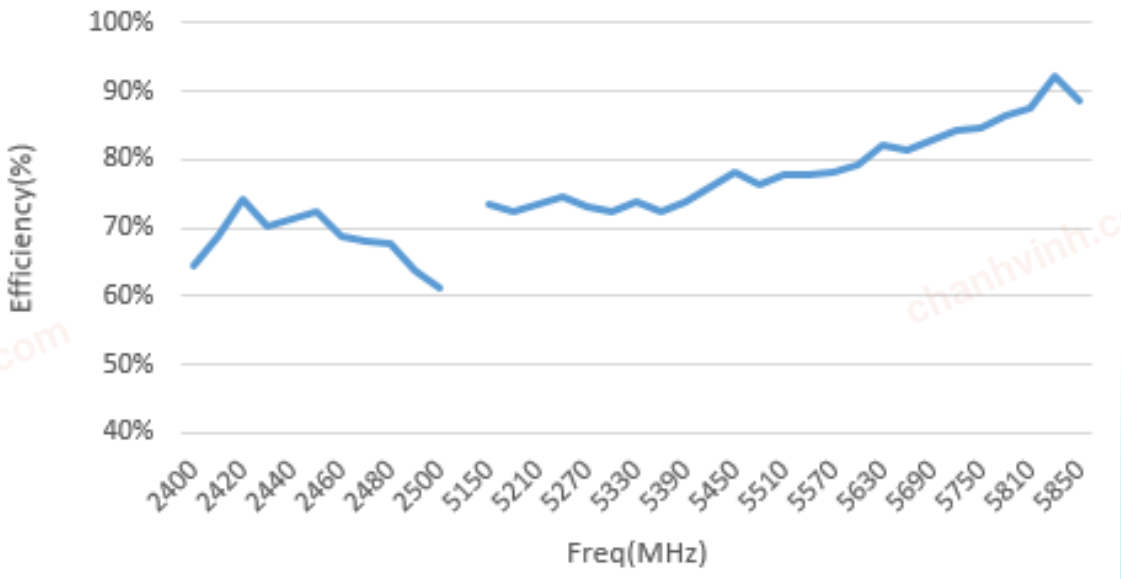

In the effort to improve our products, we reserve the right to make changes judged to be necessary.
CONFIDENTIAL AND PROPRIETARY INFORMATION
This document contains confidential and proprietary information of Pulse Electronics, Inc. (Pulse) and is protected by copyright, trade secret and other state and federal laws. Its receipt or possession does not convey any rights to reproduce, disclose its contents, or to manufacture, use or sell anything it may describe. Reproduction, disclosure or use without specific written authorization of Pulse is strictly forbidden.

RoHS COMPLIANT

chanhvinh.com

Pulse a YAGEO company

TECHNICAL DATA SHEET

Description: 2.4-2.5/5.15-7.125GHz Dual band Ceramic 10x3.2x1.5mm

Series: Chip Antenna

PART NUMBER: W3006

CHARTS

1. Layout and Matching for 2.4-2.5/5.15-5.85GHz

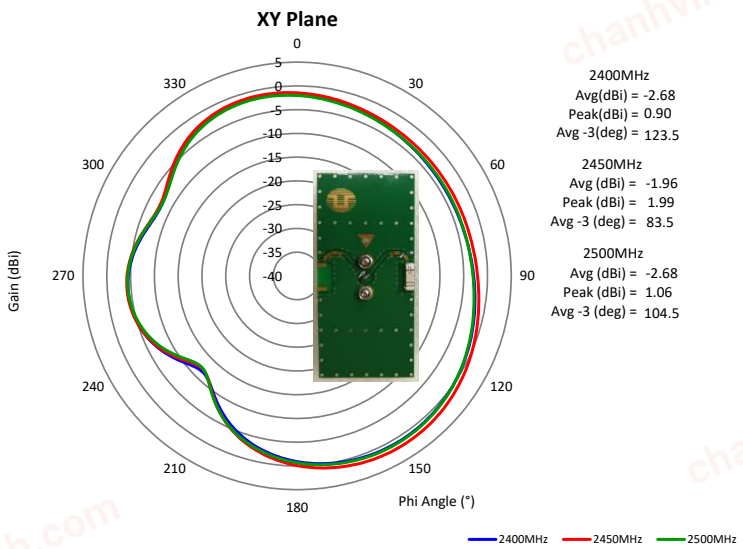

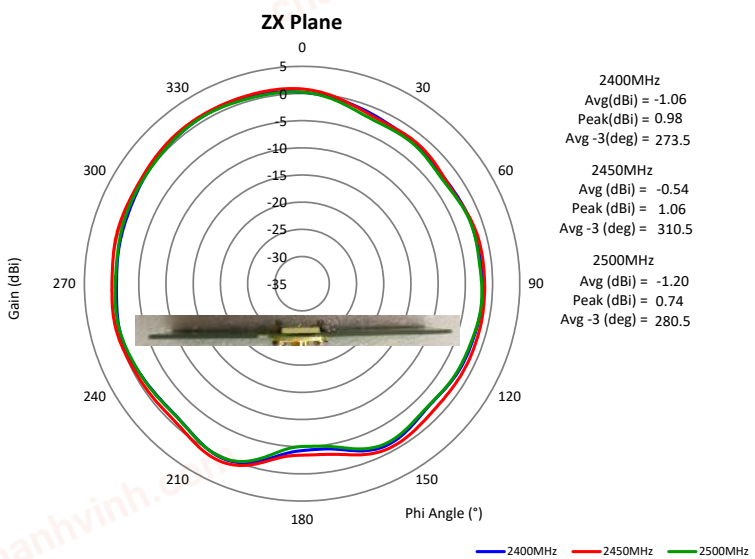

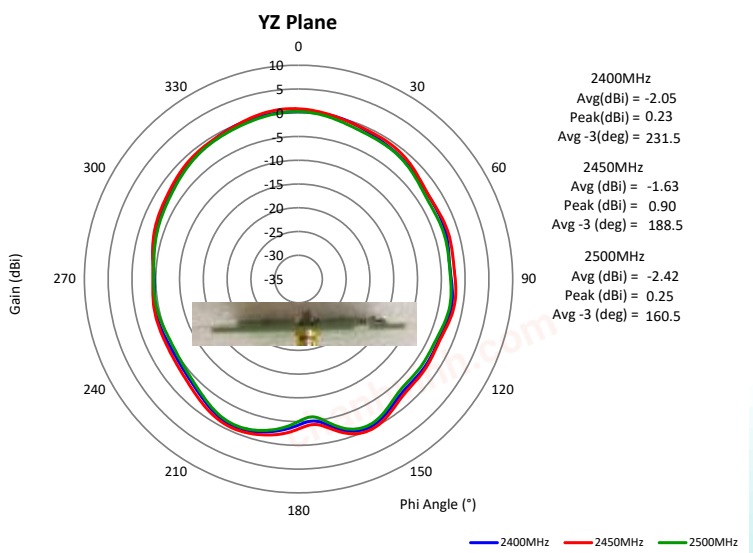

In the effort to improve our products, we reserve the right to make changes judged to be necessary.
CONFIDENTIAL AND PROPRIETARY INFORMATION
This document contains confidential and proprietary information of Pulse Electronics, Inc. (Pulse) and is protected by copyright, trade secret and other state and federal laws. Its receipt or possession does not convey any rights to reproduce, disclose its contents, or to manufacture, use or sell anything it may describe. Reproduction, disclosure or use without specific written authorization of Pulse is strictly forbidden.

RoHS COMPLIANT

chanhvinh.com

Pulse a YAGEO company

TECHNICAL DATA SHEET

Description: 2.4-2.5/5.15-7.125GHz Dual band Ceramic 10x3.2x1.5mm

Series: Chip Antenna

PART NUMBER: W3006

CHARTS

1. Layout and Matching for 2.4-2.5/5.15-5.85GHz

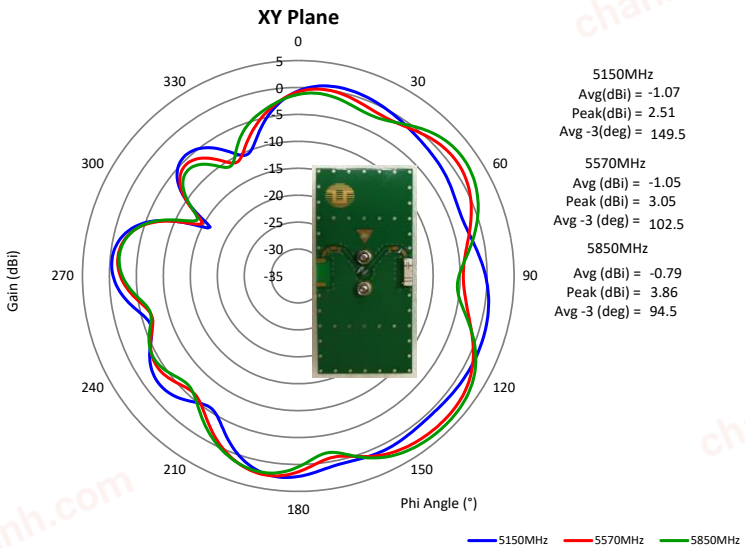

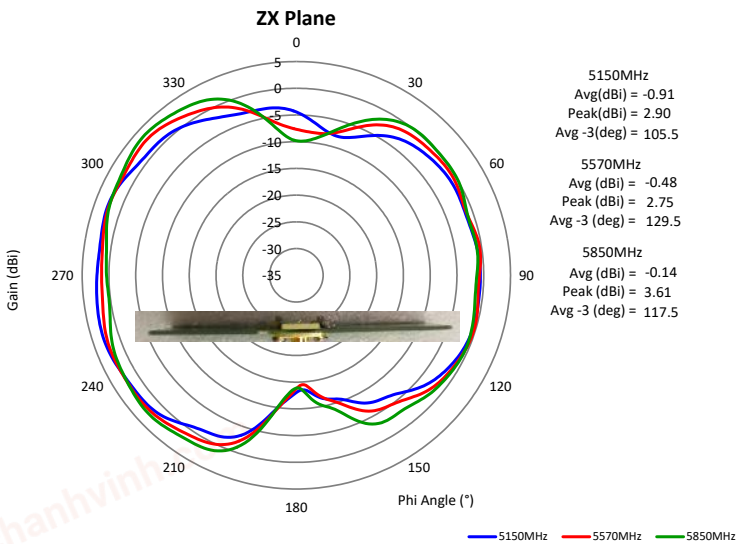

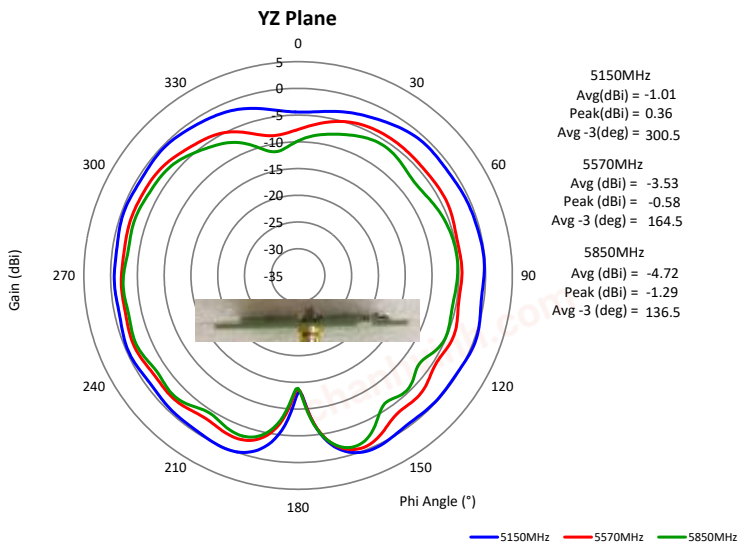

In the effort to improve our products, we reserve the right to make changes judged to be necessary.
CONFIDENTIAL AND PROPRIETARY INFORMATION
This document contains confidential and proprietary information of Pulse Electronics, Inc. (Pulse) and is protected by copyright, trade secret and other state and federal laws. Its receipt or possession does not convey any rights to reproduce, disclose its contents, or to manufacture, use or sell anything it may describe. Reproduction, disclosure or use without specific written authorization of Pulse is strictly forbidden.

RoHS COMPLIANT

chanhvinh.com

Pulse
a YAGEO company

TECHNICAL DATA SHEET

Description: 2.4-2.5/5.15-7.125GHz Dual band Ceramic 10x3.2x1.5mm

Series: Chip Antenna

PART NUMBER: W3006

Test setup

2. Layout and Matching for 2.4-2.5/5.15-7.125GHz

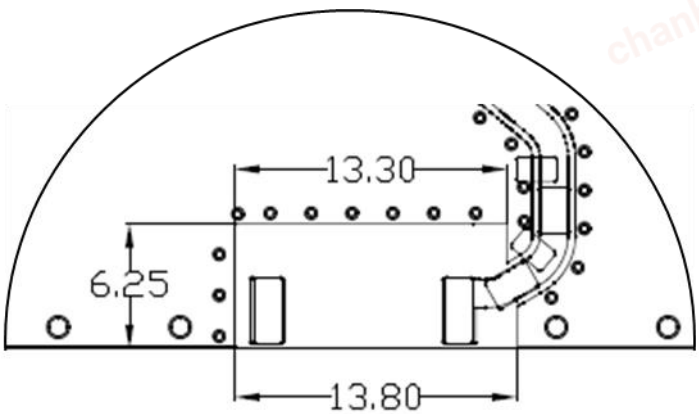

Return Loss

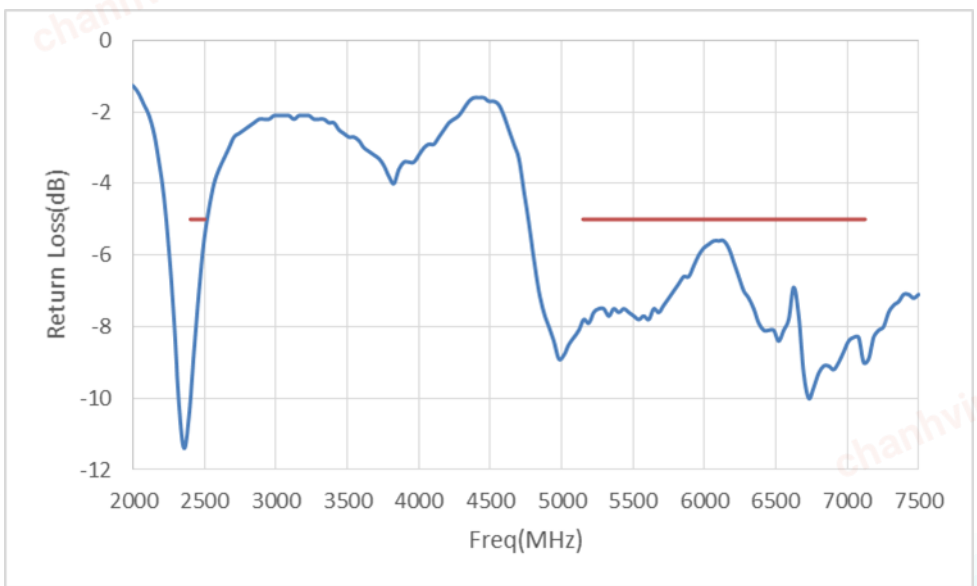

In the effort to improve our products, we reserve the right to make changes judged to be necessary.
CONFIDENTIAL AND PROPRIETARY INFORMATION
This document contains confidential and proprietary information of Pulse Electronics, Inc. (Pulse) and is protected by copyright, trade secret and other state and federal laws. Its receipt or possession does not convey any rights to reproduce, disclose its contents, or to manufacture, use or sell anything it may describe. Reproduction, disclosure or use without specific written authorization of Pulse is strictly forbidden.

RoHS COMPLIANT

chanhvinh.com

Pulse a YAGEO company

TECHNICAL DATA SHEET

Description: 2.4-2.5/5.15-7.125GHz Dual band Ceramic 10x3.2x1.5mm

Series: Chip Antenna

PART NUMBER: W3006

CHARTS

2. Layout and Matching for 2.4-2.5/5.15-7.125GHz

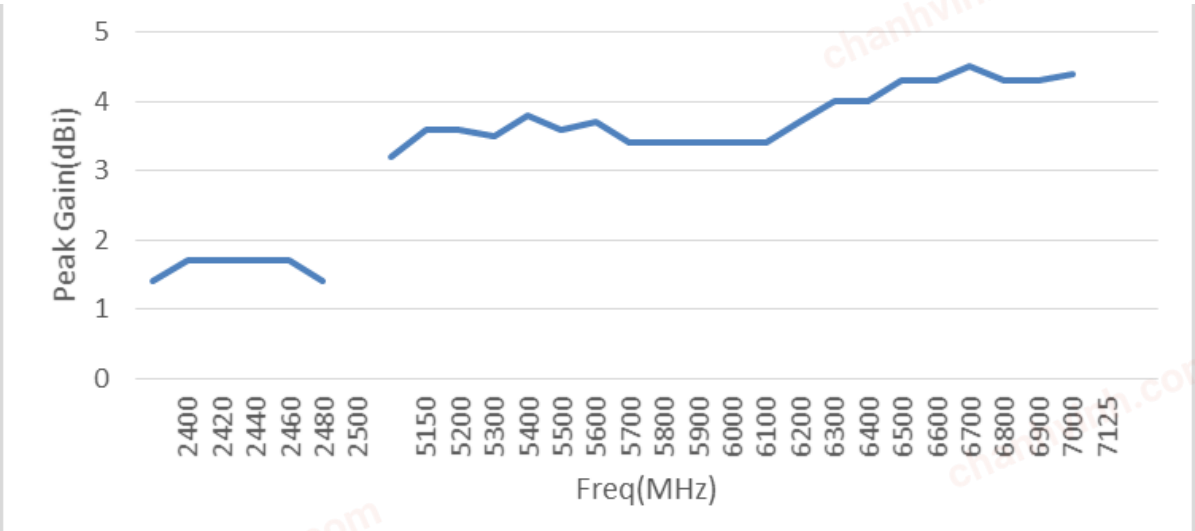

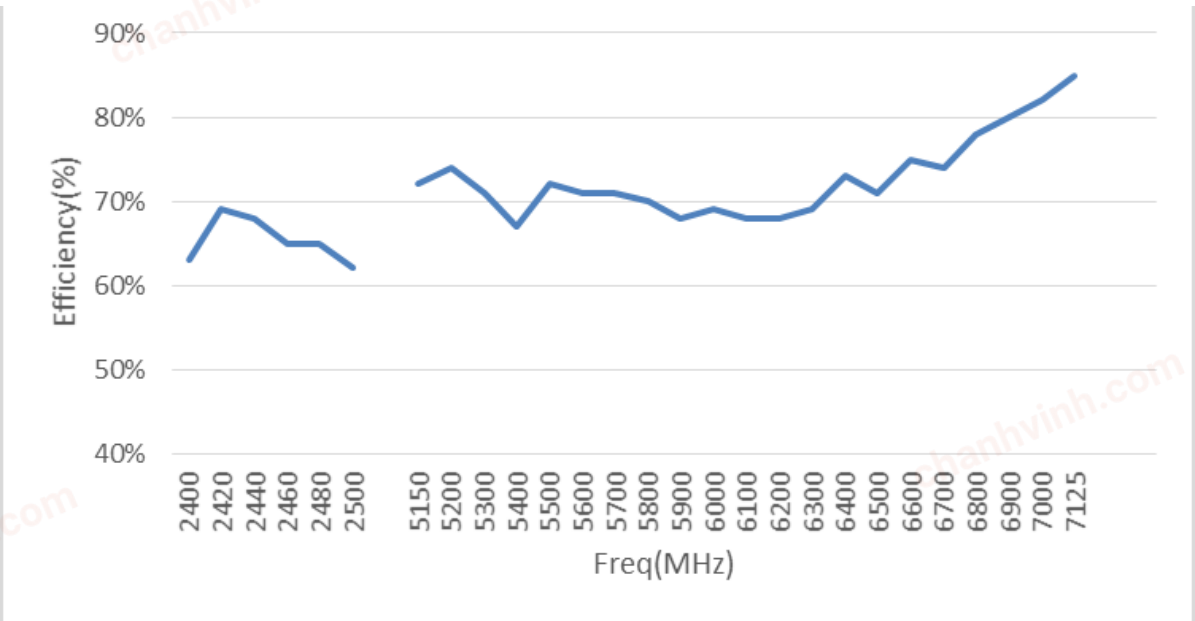

In the effort to improve our products, we reserve the right to make changes judged to be necessary.
CONFIDENTIAL AND PROPRIETARY INFORMATION
This document contains confidential and proprietary information of Pulse Electronics, Inc. (Pulse) and is protected by copyright, trade secret and other state and federal laws. Its receipt or possession does not convey any rights to reproduce, disclose its contents, or to manufacture, use or sell anything it may describe. Reproduction, disclosure or use without specific written authorization of Pulse is strictly forbidden.

RoHS COMPLIANT

chanhvinh.com

Pulse a YAGEO company

TECHNICAL DATA SHEET

Description: 2.4-2.5/5.15-7.125GHz Dual band Ceramic 10x3.2x1.5mm

Series: Chip Antenna

PART NUMBER: W3006

CHARTS

2. Layout and Matching for 2.4-2.5/5.15-7.125GHz

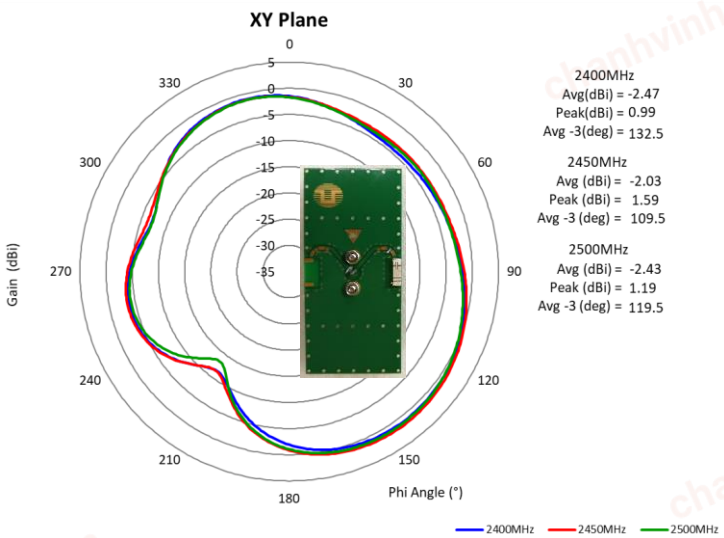

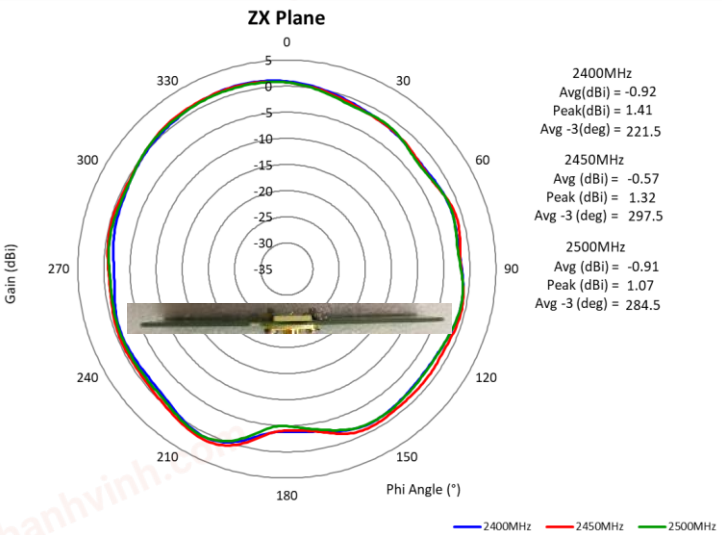

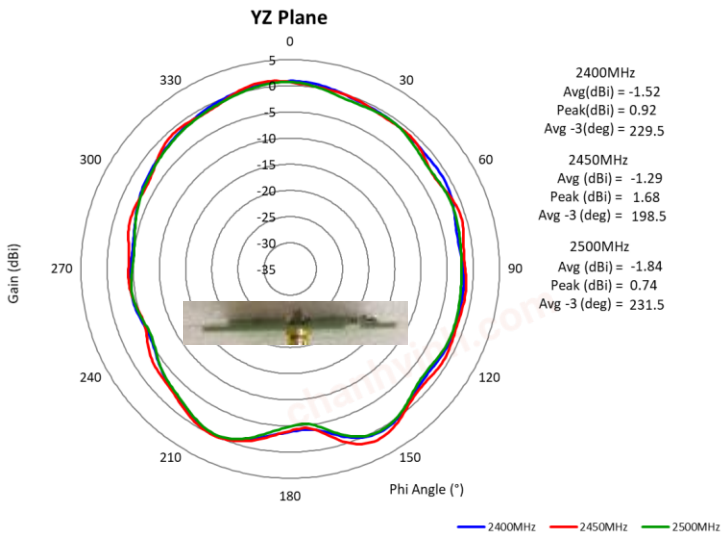

In the effort to improve our products, we reserve the right to make changes judged to be necessary.
CONFIDENTIAL AND PROPRIETARY INFORMATION
This document contains confidential and proprietary information of Pulse Electronics, Inc. (Pulse) and is protected by copyright, trade secret and other state and federal laws. Its receipt or possession does not convey any rights to reproduce, disclose its contents, or to manufacture, use or sell anything it may describe. Reproduction, disclosure or use without specific written authorization of Pulse is strictly forbidden.

RoHS COMPLIANT

chanhvinh.com

Pulse a YAGEO company

TECHNICAL DATA SHEET

Description: 2.4-2.5/5.15-7.125GHz Dual band Ceramic 10x3.2x1.5mm

Series: Chip Antenna

PART NUMBER: W3006

CHARTS

2. Layout and Matching for 2.4-2.5/5.15-7.125GHz

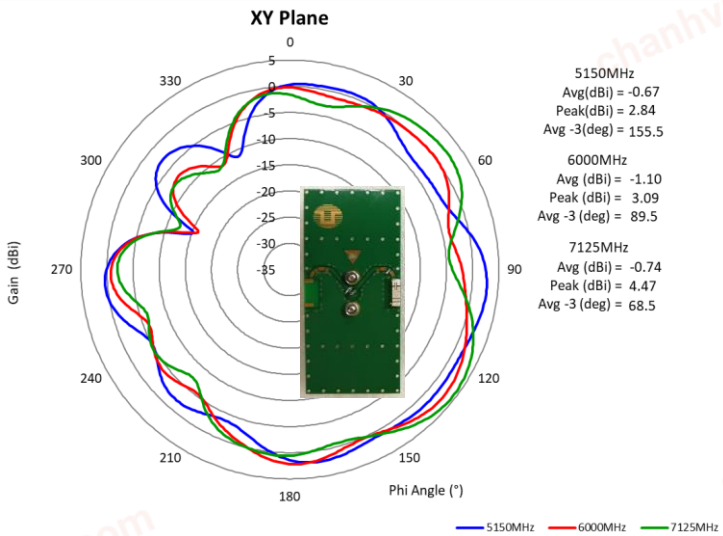

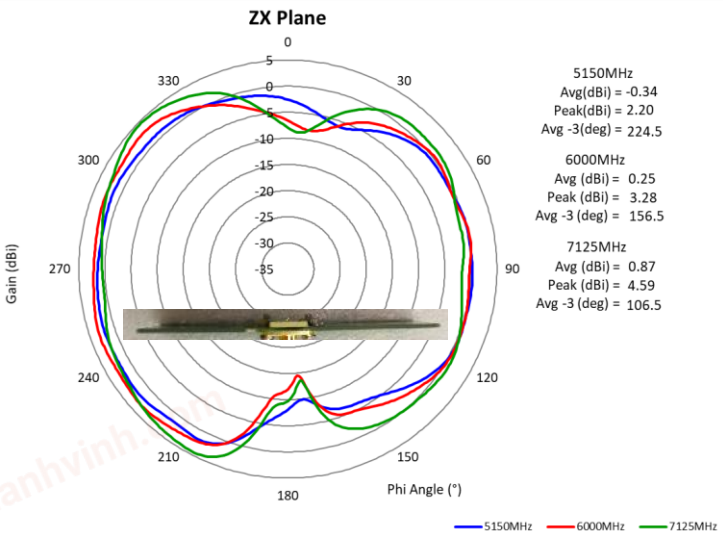

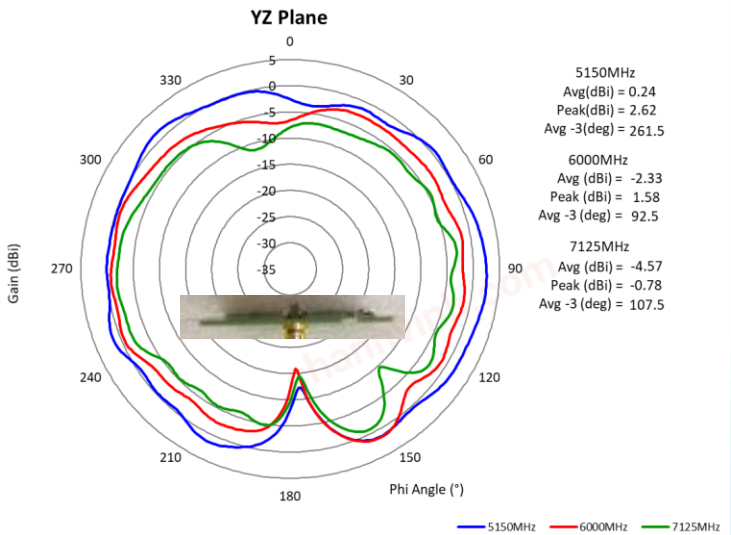

In the effort to improve our products, we reserve the right to make changes judged to be necessary.
CONFIDENTIAL AND PROPRIETARY INFORMATION
This document contains confidential and proprietary information of Pulse Electronics, Inc. (Pulse) and is protected by copyright, trade secret and other state and federal laws. Its receipt or possession does not convey any rights to reproduce, disclose its contents, or to manufacture, use or sell anything it may describe. Reproduction, disclosure or use without specific written authorization of Pulse is strictly forbidden.

RoHS COMPLIANT

chanhvinh.com

Pulse
a YAGEO company

TECHNICAL DATA SHEET

Description: 2.4-2.5/5.15-7.125GHz Dual band Ceramic 10x3.2x1.5mm

Series: Chip Antenna

PART NUMBER: W3006

PACKAGING

1000pcs antennas per 7” reel

3pcs 7” reel per inner package box

2pcs inner box per out box

Total 6000pcs antenna per out box

Out box size: 390mmx215mmx165mm

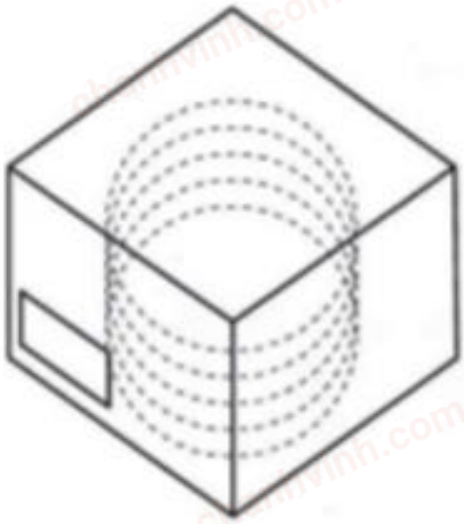

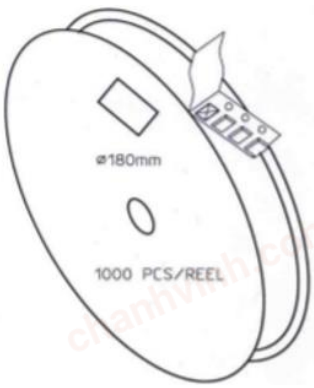



LEVEL

NOT MOISTURE SENSITIVE 1

These Devices do not require special storage conditions provided:

1. They are maintained at conditions equal to or less than 30℃ and 85% RH.
2. They are solder reflowed at a peak body temperture which does not exceed 260℃.

Note: Level and body temperture defined by IPC/JEDEC J-STD-020

In the effort to improve our products, we reserve the right to make changes judged to be necessary.
CONFIDENTIAL AND PROPRIETARY INFORMATION
This document contains confidential and proprietary information of Pulse Electronics, Inc. (Pulse) and is protected by copyright, trade secret and other state and federal laws. Its receipt or possession does not convey any rights to reproduce, disclose its contents, or to manufacture, use or sell anything it may describe. Reproduction, disclosure or use without specific written authorization of Pulse is strictly forbidden.

RoHS COMPLIANT