chanhvinh.com

Pulse
a YAGEO company

Series: Stick Antenna

TECHNICAL DATA SHEET

Description: 2.4GHz Dipole Swivel Antenna with coax feed + U.FL

PART NUMBER: W1049BXXX



Antenna



Mounting grommet, supplied with Antenna

Features:

- 2400-2500MHz
- Gain 2dBi
- VSWR 2:1
- Various cable lengths
- Connector U.FL compatible
- Ingress Protection IP20
- RoHS Complaint

Applications:

- Indoor omnidirectional antenna
- ISM 2.4GHz radios
- Bluetooth, BLE, Zigbee
- WiFi 2.4-2.5GHz
- Direct cable connection to radio connector
- Swivel feature for optimized performance on all use cases

All dimensions are in mm / inches

Issue: 2103

RoHS COMPLIANT

In the effort to improve our products, we reserve the right to make changes judged to be necessary.
CONFIDENTIAL AND PROPRIETARY INFORMATION
This document contains confidential and proprietary information of Pulse Electronics, Inc. (Pulse) and is protected by copyright, trade secret and other state and federal laws. Its receipt or possession does not convey any rights to reproduce, disclose its contents, or to manufacture, use or sell anything it may describe. Reproduction, disclosure or use without specific written authorization of Pulse is strictly forbidden.
For more information:

Pulse Worldwide Headquarters
15255 Innovation Drive #100
San Diego, CA 92128
USA
Tel:1-858-674-8100

Pulse/Larsen Antennas
18110 SE 34th St Bldg 2 Suite 250
Vancouver, WA 98683
USA
Tel: 1-360-944-7551

Europe Headquarters
Pulse GmbH & Do, KG
Zeppelinstrasse 15
Herrenberg, Germany
Tel: 49 7032 7806 0

Pulse (Suzhou) Wireless Products Co, Inc.
99 Huo Ju Road(#29 Bldg,4th Phase
Suzhou New District
Jiangsu Province, Suzhou 215009 PR China
Tel: 86 512 6807 9998

chanhvinh.com

Pulse
a YAGEO company

Series: Stick Antenna

TECHNICAL DATA SHEET

Description: 2.4GHz Dipole Swivel Antenna with coax feed + U.FL

PART NUMBER: W1049BXXX

ELECTRICAL SPECIFICATIONS

Antenna Type	Dipole
Frequency	2.4-2.5GHz
Nominal Impedance	50 Ω
VSWR	2:1(MAX)
Radiation Pattern	Omni
Gain	2dBi (typical)
Efficiency	75% (typical)
Polarization	Linear-Vertical
Power Withstanding	2W

MECHANICAL SPECIFICATIONS

	Overall Length (mm/in)	Weight (g)	ANT Color	Connector Type	Cable Type	Cable Length (mm/in)	Remark
W1049B030	158.5/6.25	4.86	Black	I-PEX	MI-113	76/3	
W1049B030D	158.5/6.25	4.86	Black	I-PEX	MI-113	76/3	Same as W1049B030, but no grommet
W1049B050	209.5/8.25	5.49	Black	I-PEX	MI-113	127/5	
W1049B070	260.5/10.25	6.12	Black	I-PEX	MI-113	178/7	
W1049B090	311.5/12.25	6.75	Black	I-PEX	MI-113	229/9	
W1049B120	387.5/15.25	7.70	Black	I-PEX	MI-113	305/12	

ENVIRONMENTAL SPECIFICATIONS

Operating Temperature	-40 ~ +85° C
Storage Temperature	-40 ~ +85° C
Ingress Protection	IP20, Indoor use
RoHS Compliant	Yes

Issue: 2103

In the effort to improve our products, we reserve the right to make changes judged to be necessary.
CONFIDENTIAL AND PROPRIETARY INFORMATION
This document contains confidential and proprietary information of Pulse Electronics, Inc. (Pulse) and is protected by copyright, trade secret and other state and federal laws. Its receipt or possession does not convey any rights to reproduce, disclose its contents, or to manufacture, use or sell anything it may describe. Reproduction, disclosure or use without specific written authorization of Pulse is strictly forbidden.

RoHS COMPLIANT

chanhvinh.com

Pulse
a YAGEO company

Series: Stick Antenna

TECHNICAL DATA SHEET

Description: 2.4GHz Dipole Swivel Antenna with coax feed + U.FL

PART NUMBER: W1049BXXX

MECHANICAL DRAWING

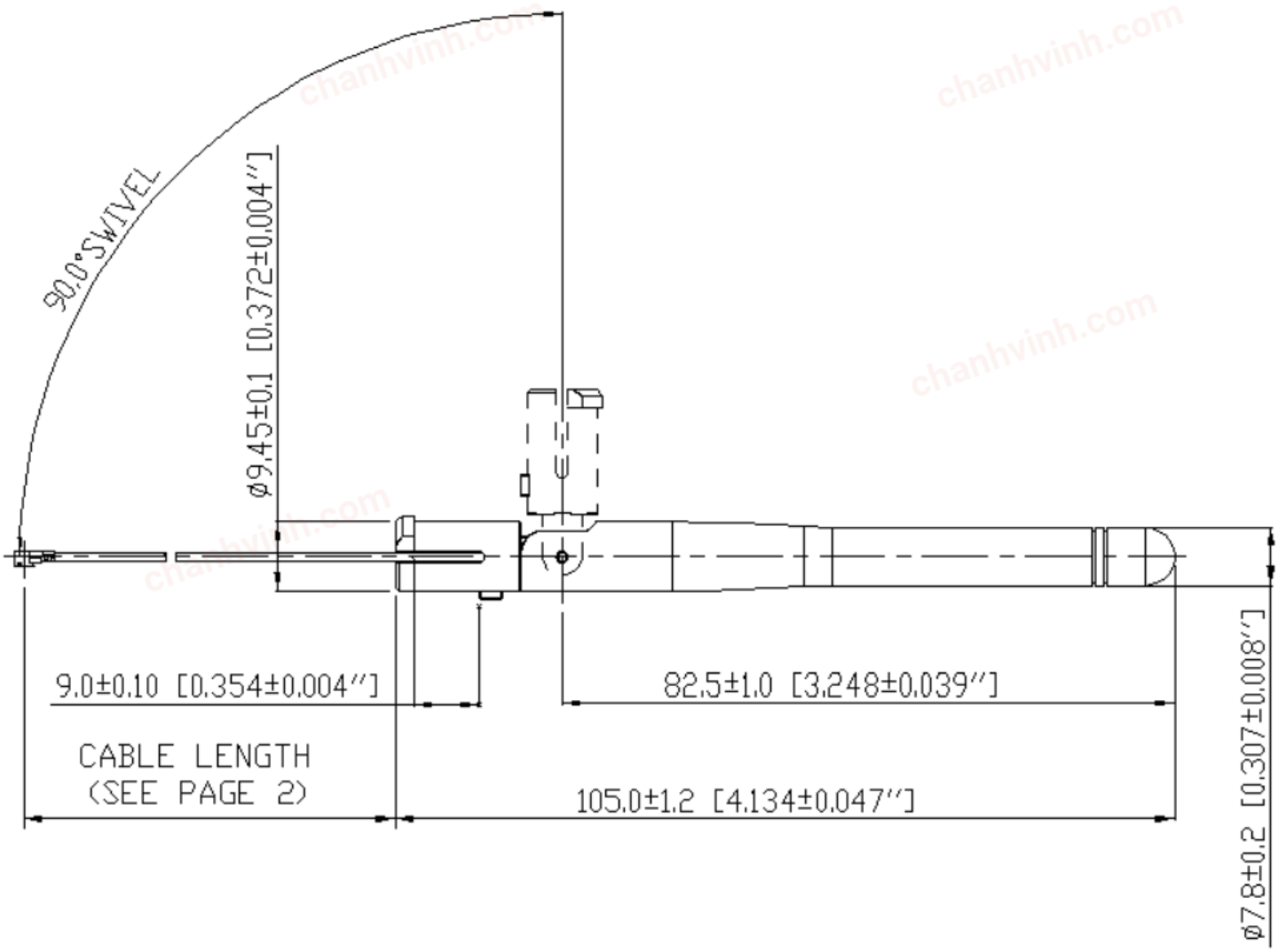

In the effort to improve our products, we reserve the right to make changes judged to be necessary.
CONFIDENTIAL AND PROPRIETARY INFORMATION
This document contains confidential and proprietary information of Pulse Electronics, Inc. (Pulse) and is protected by copyright, trade secret and other state and federal laws. Its receipt or possession does not convey any rights to reproduce, disclose its contents, or to manufacture, use or sell anything it may describe. Reproduction, disclosure or use without specific written authorization of Pulse is strictly forbidden.

RoHS COMPLIANT

chanhvinh.com

Pulse
a YAGEO company

Series: Stick Antenna

TECHNICAL DATA SHEET

Description: 2.4GHz Dipole Swivel Antenna with coax feed + U.FL

PART NUMBER: W1049BXXX

TEST SETUP

SETUP1 - 0°



SETUP2 - 90°



Test in free space without ground plane.

In the effort to improve our products, we reserve the right to make changes judged to be necessary.
CONFIDENTIAL AND PROPRIETARY INFORMATION
This document contains confidential and proprietary information of Pulse Electronics, Inc. (Pulse) and is protected by copyright, trade secret and other state and federal laws. Its receipt or possession does not convey any rights to reproduce, disclose its contents, or to manufacture, use or sell anything it may describe. Reproduction, disclosure or use without specific written authorization of Pulse is strictly forbidden.

RoHS COMPLIANT

chanhvinh.com

Pulse
a YAGEO company

Series: Stick Antenna

TECHNICAL DATA SHEET

Description: 2.4GHz Dipole Swivel Antenna with coax feed + U.FL

PART NUMBER: W1049BXXX

CHARTS

VSWR vs Frequency



In the effort to improve our products, we reserve the right to make changes judged to be necessary.
CONFIDENTIAL AND PROPRIETARY INFORMATION
This document contains confidential and proprietary information of Pulse Electronics, Inc. (Pulse) and is protected by copyright, trade secret and other state and federal laws. Its receipt or possession does not convey any rights to reproduce, disclose its contents, or to manufacture, use or sell anything it may describe. Reproduction, disclosure or use without specific written authorization of Pulse is strictly forbidden.

RoHS COMPLIANT

chanhvinh.com

Pulse
a YAGEO company

Series: Stick Antenna

TECHNICAL DATA SHEET

Description: 2.4GHz Dipole Swivel Antenna with coax feed + U.FL

PART NUMBER: W1049BXXX

CHARTS

Peaking Gain

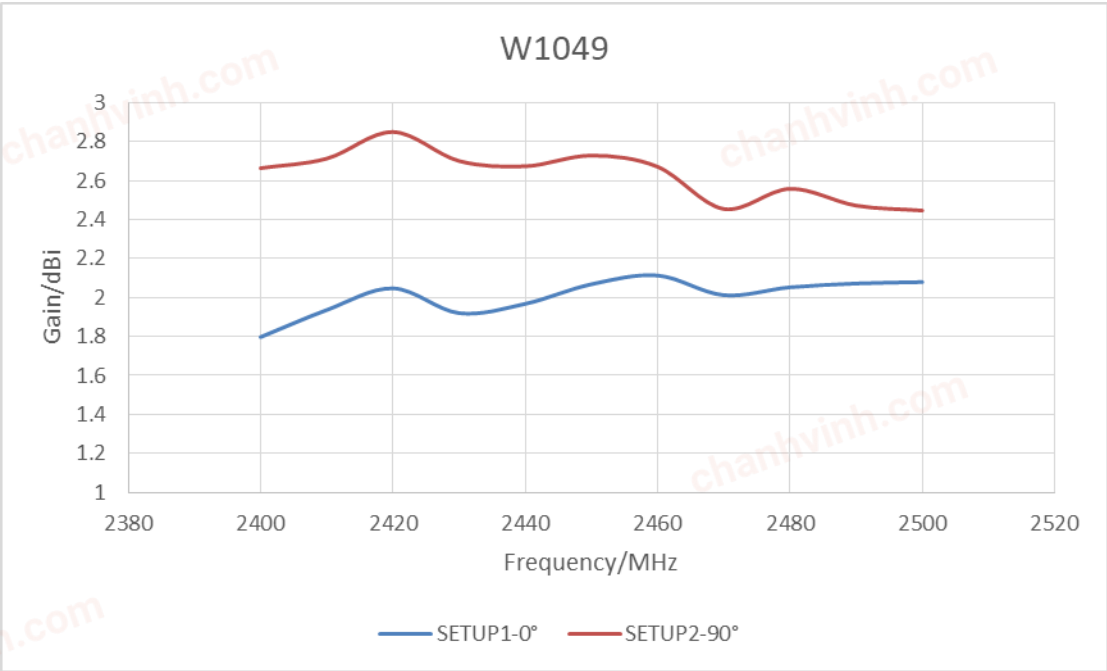

Radiation Efficiency

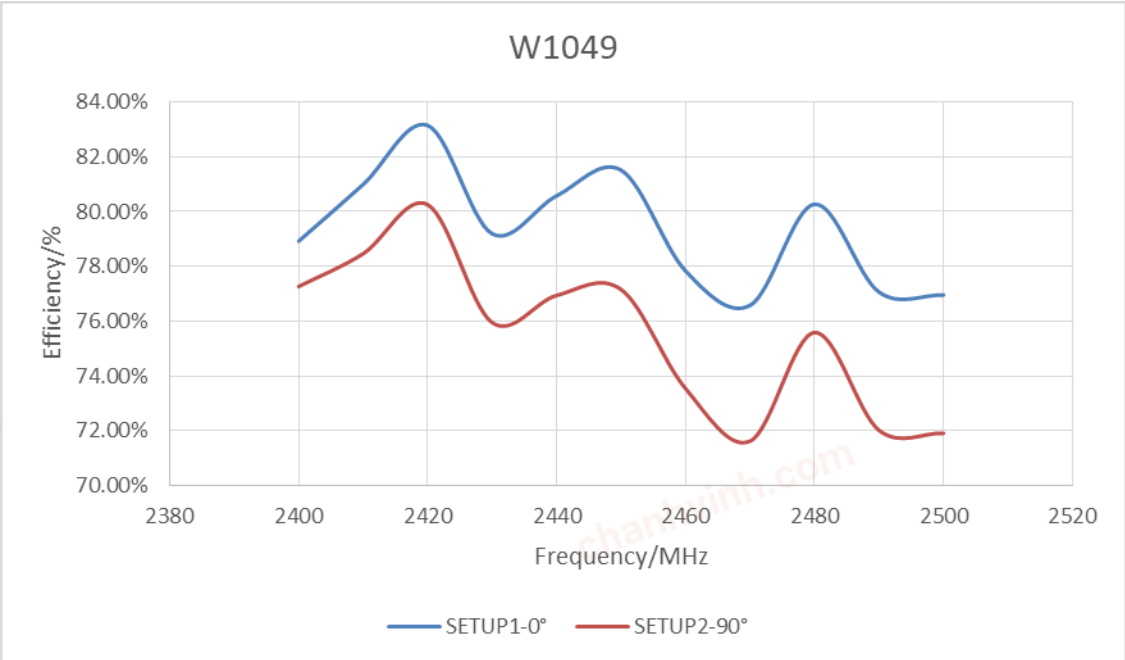

Issue: 2103

In the effort to improve our products, we reserve the right to make changes judged to be necessary.
CONFIDENTIAL AND PROPRIETARY INFORMATION
This document contains confidential and proprietary information of Pulse Electronics, Inc. (Pulse) and is protected by copyright, trade secret and other state and federal laws. Its receipt or possession does not convey any rights to reproduce, disclose its contents, or to manufacture, use or sell anything it may describe. Reproduction, disclosure or use without specific written authorization of Pulse is strictly forbidden.

RoHS COMPLIANT

chanhvinh.com

Pulse
a YAGEO company

Series: Stick Antenna

TECHNICAL DATA SHEET

Description: 2.4GHz Dipole Swivel Antenna with coax feed + U.FL

PART NUMBER: W1049BXXX

CHARTS

SETUP2-90° Radiation pattern (2D) /2400-2500MHz

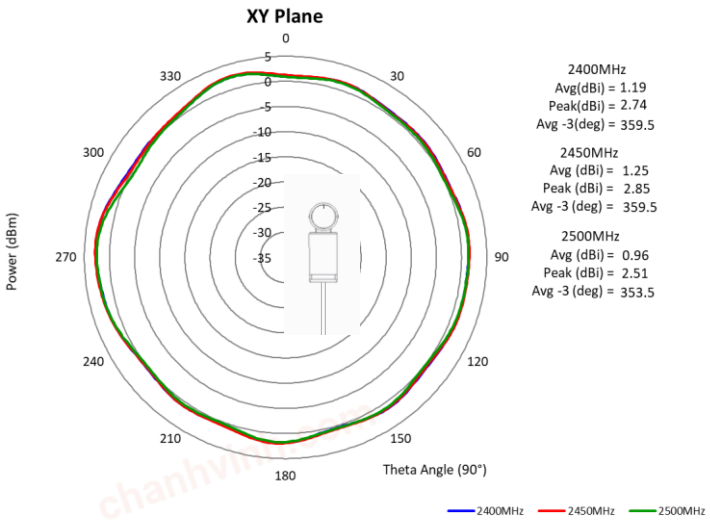

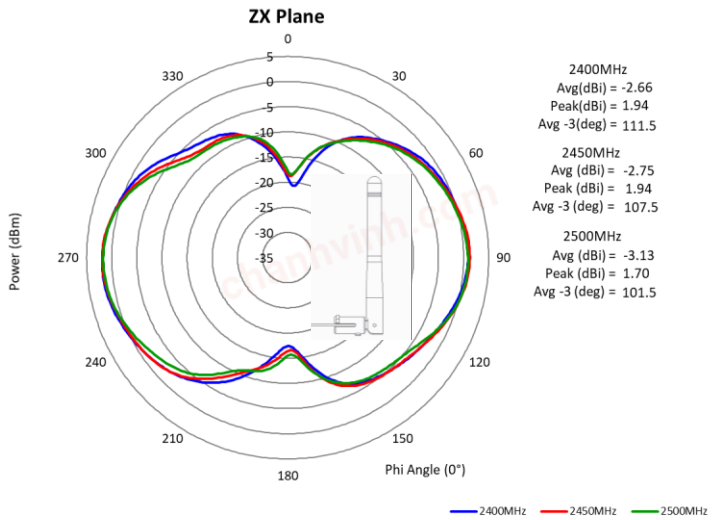

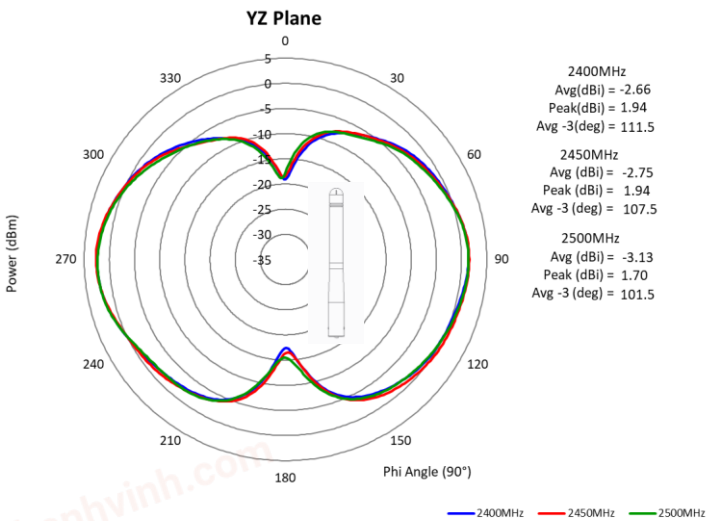

In the effort to improve our products, we reserve the right to make changes judged to be necessary.
CONFIDENTIAL AND PROPRIETARY INFORMATION
This document contains confidential and proprietary information of Pulse Electronics, Inc. (Pulse) and is protected by copyright, trade secret and other state and federal laws. Its receipt or possession does not convey any rights to reproduce, disclose its contents, or to manufacture, use or sell anything it may describe. Reproduction, disclosure or use without specific written authorization of Pulse is strictly forbidden.

RoHS COMPLIANT

chanhvinh.com

Pulse
a YAGEO company

Series: Stick Antenna

TECHNICAL DATA SHEET

Description: 2.4GHz Dipole Swivel Antenna with coax feed + U.FL

PART NUMBER: W1049BXXX

PACKAGING

Quantity: 1200 PCS per Box

Packaging Steps:

1. Place 20pcs products into PE bag
2. Apply HF & RoHS label onto PE bag and seal bag.

In the effort to improve our products, we reserve the right to make changes judged to be necessary.
CONFIDENTIAL AND PROPRIETARY INFORMATION
This document contains confidential and proprietary information of Pulse Electronics, Inc. (Pulse) and is protected by copyright, trade secret and other state and federal laws. Its receipt or possession does not convey any rights to reproduce, disclose its contents, or to manufacture, use or sell anything it may describe. Reproduction, disclosure or use without specific written authorization of Pulse is strictly forbidden.

RoHS COMPLIANT

chanhvinh.com

Pulse
a YAGEO company

Series: Stick Antenna

TECHNICAL DATA SHEET

Description: 2.4GHz Dipole Swivel Antenna with coax feed + U.FL

PART NUMBER: W1049BXXX

ASSEMBLY

The antenna has two kinds of mounting method

Option 1. If the box wall has the support structure as below, the antenna just directly insert into the hole of the box wall. The suggestion hole size is shown in the drawing.

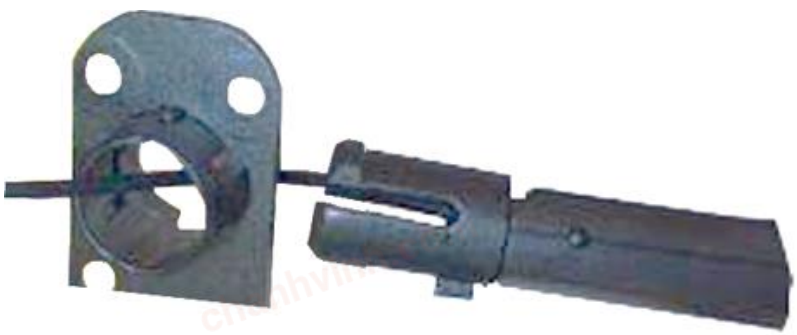

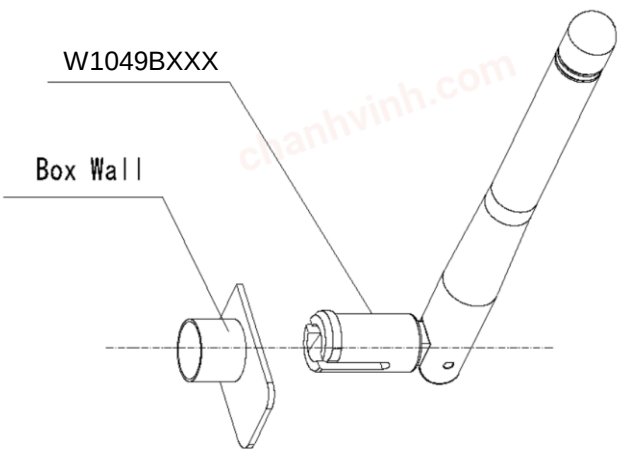

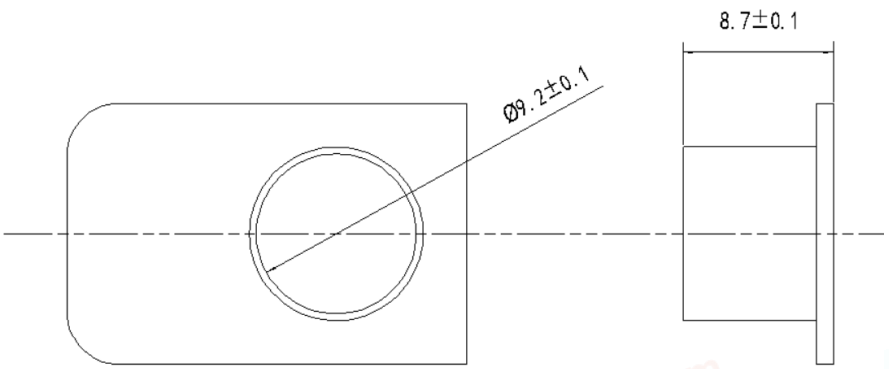

In the effort to improve our products, we reserve the right to make changes judged to be necessary.
CONFIDENTIAL AND PROPRIETARY INFORMATION
This document contains confidential and proprietary information of Pulse Electronics, Inc. (Pulse) and is protected by copyright, trade secret and other state and federal laws. Its receipt or possession does not convey any rights to reproduce, disclose its contents, or to manufacture, use or sell anything it may describe. Reproduction, disclosure or use without specific written authorization of Pulse is strictly forbidden.

RoHS COMPLIANT

chanhvinh.com

Pulse
a YAGEO company

Series: Stick Antenna

TECHNICAL DATA SHEET

Description: 2.4GHz Dipole Swivel Antenna with coax feed + U.FL

PART NUMBER: W1049BXXX

Option 2. If the box wall is flat wall. We should install the plastic mounting grommet we provide into the hole of the box wall firstly, then install the antenna. The suggestion hole size and wall thickness are below.

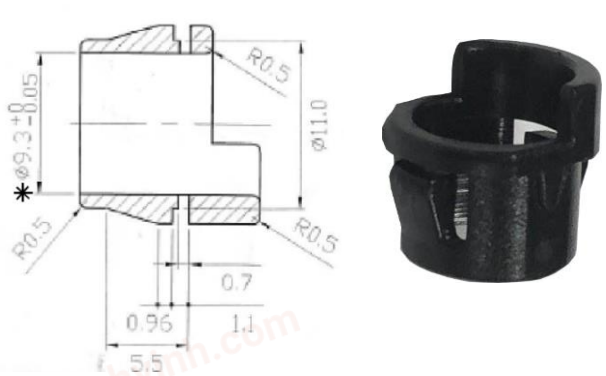

Plastic Mounting Grommet (Unit: mm)

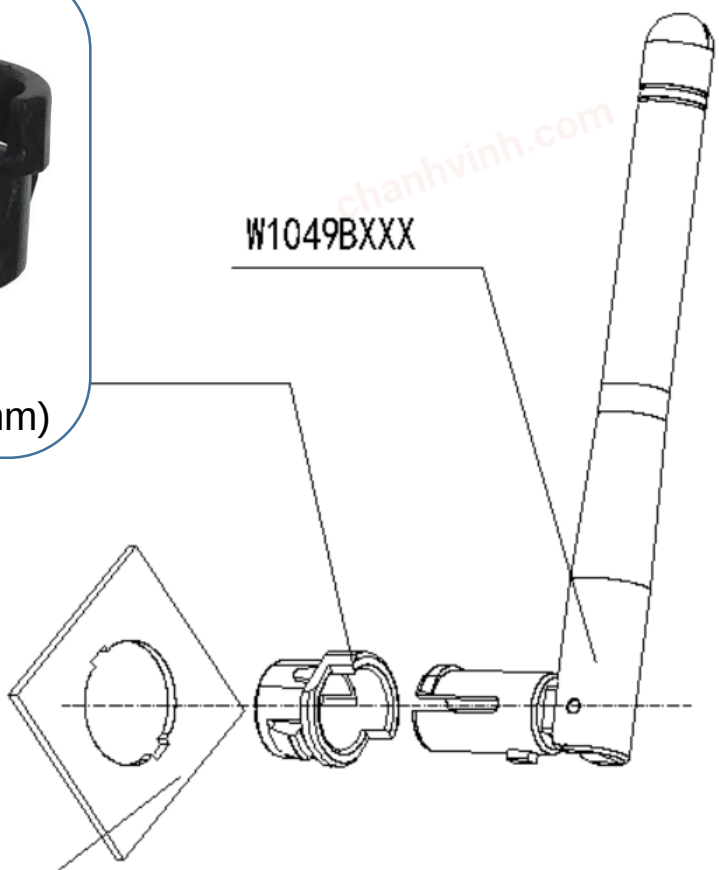

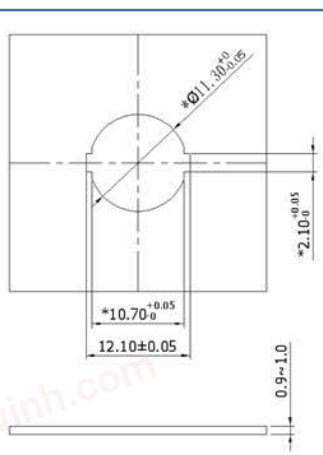

Box Wall

Issue: 2103

In the effort to improve our products, we reserve the right to make changes judged to be necessary.
CONFIDENTIAL AND PROPRIETARY INFORMATION
This document contains confidential and proprietary information of Pulse Electronics, Inc. (Pulse) and is protected by copyright, trade secret and other state and federal laws. Its receipt or possession does not convey any rights to reproduce, disclose its contents, or to manufacture, use or sell anything it may describe. Reproduction, disclosure or use without specific written authorization of Pulse is strictly forbidden.

RoHS COMPLIANT