chanhvinh.com

Pulse
A YAGEO Company

TECHNICAL DATA SHEET

Description: 2520 Triplexer

PART NUMBER: TPX2520LKTDRWH34L

Features:

- Compact Size
- Low loss
- High Soldering Heat Resistance

Applications:

- For LTE/NR application

ELECTRICAL SPECIFICATIONS

Low-Band

Item	Frequency Range (MHz)	Min.	Typ.	Max.
Insertion loss (dB)	617~1990	-	0.53	0.8
	2300~2496	-	0.68	0.9
	2496~2690	-	1.1	1.35
Return loss (dB)	617~2690	10	14.1	-
Attenuation (dB)	3300~3700	15	17.2	-
	3700~3800	15	17	-
	3800~4200	15	17	-
	4400~5000	25	35.1	-
	5150~5925	25	42.8	-
	5925~12750	10	18	-

Middle-band

Item	Frequency Range (MHz)	Min.	Typ.	Max.
Insertion loss (dB)	3300~3800	-	1.07	1.35
Return loss (dB)	3300~3800	10	16.5	-
Attenuation (dB)	617~2690	12	13.8	-
	4400~5000	14	15.3	-

In the effort to improve our products, we reserve the right to make changes judged to be necessary.

RoHS COMPLIANT

CONFIDENTIAL AND PROPRIETARY INFORMATION
This document contains confidential and proprietary information of Pulse Electronics, Inc. (Pulse) and is protected by copyright, trade secret and other state and federal laws. Its receipt or possession does not convey any rights to reproduce, disclose its contents, or to manufacture, use or sell anything it may describe. Reproduction, disclosure or use without specific written authorization of Pulse is strictly forbidden.

For more information:

Pulse Worldwide Headquarters
15255 Innovation Drive #100
San Diego, CA 92128
USA
Tel:1-858-674-8100

Pulse/Larsen Antennas
18110 SE 34th St Bldg 2 Suite 250
Vancouver, WA 98683
USA
Tel: 1-360-944-7551

Europe Headquarters
Pulse GmbH & Do, KG
Zeppelinstrasse 15
Herrenberg, Germany
Tel: 49 7032 7806 0

Pulse (Suzhou) Wireless Products Co, Inc.
99 Huo Ju Road(#29 Bldg,4th Phase
Suzhou New District
Jiangsu Province, Suzhou 215009 PR China
Tel: 86 512 6807 9998

chanhvinh.com

Pulse A YAGEO Company

TECHNICAL DATA SHEET

Description: 2520 Triplexer

PART NUMBER: TPX2520LKTDRWH34L

ELECTRICAL SPECIFICATIONS

High-Band

Item	Frequency Range (MHz)	Min.	Typ.	Max.
Insertion loss (dB)	4400~5000	-	0.91	1.35
Return loss (dB)	4400~5000	10	14	-
Attenuation (dB)	617~2690	16	18.1	-
	2170~3150	14	16	-
	3300~3600	14	16.9	-
	3600~3800	17	21.1	-
	3800~4200	-	2.1	-
	8800~10000	15	17.1	-
	13200~15000	5	11.9	-

Common

Item	Frequency Range (MHz)	Min.	Typ.	Max.
Return loss (dB)	617~2690	10	14.1	-
	3300~3800	10	16.5	-
	4400~5000	10	14	-

In the effort to improve our products, we reserve the right to make changes judged to be necessary.
CONFIDENTIAL AND PROPRIETARY INFORMATION
This document contains confidential and proprietary information of Pulse Electronics, Inc. (Pulse) and is protected by copyright, trade secret and other state and federal laws. Its receipt or possession does not convey any rights to reproduce, disclose its contents, or to manufacture, use or sell anything it may describe. Reproduction, disclosure or use without specific written authorization of Pulse is strictly forbidden.

RoHS COMPLIANT

chanhvinh.com

Pulse A YAGEO Company

TECHNICAL DATA SHEET

Description: 2520 Triplexer

PART NUMBER: TPX2520LKTDRWH34L

ELECTRICAL SPECIFICATIONS

Isolation

Item	Frequency Range (MHz)	Min.	Typ.	Max.
Low to Middle band (dB)	617~960	16	18.4	-
	1695~1710	15	17	-
	1710~2200	15	17	-
	2300~2690	14	15.3	-
	3300~3800	14	16.6	-
	5150~5925	18	22.1	-
Middle to High band (dB)	617~960	25	43.4	-
	1427~1606	25	38.9	-
	1710~2690	25	28	-
	3300~3600	16	18.2	-
	3600~3800	16	24.3	-
	4400~5000	15	16.8	-
Low to High band (dB)	617~960	22	25.6	-
	1427~1606	18	21.3	-
	1695~1710	18	20.8	-
	1710~2690	16	18.4	-
	3300~3800	22	41.5	-
	4400~5000	28	31.6	-
	5150~5925	30	45.2	-

Operating Temperature Range：-40~85°C
Power Capacity：3W max.

In the effort to improve our products, we reserve the right to make changes judged to be necessary.
CONFIDENTIAL AND PROPRIETARY INFORMATION
This document contains confidential and proprietary information of Pulse Electronics, Inc. (Pulse) and is protected by copyright, trade secret and other state and federal laws. Its receipt or possession does not convey any rights to reproduce, disclose its contents, or to manufacture, use or sell anything it may describe. Reproduction, disclosure or use without specific written authorization of Pulse is strictly forbidden.

RoHS COMPLIANT

chanhvinh.com

Pulse A YAGEO Company

TECHNICAL DATA SHEET

Description: 2520 Triplexer

PART NUMBER: TPX2520LKTDRWH34L

MECHANICAL DIMENSION

Outline

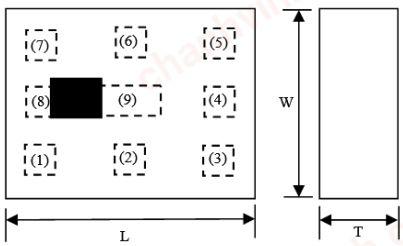

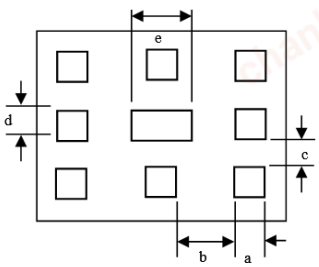

Dimension

L	W	T	a
2.50±0.15	2.00±0.15	0.65max.	0.40±0.10
b	c	d	e
0.55±0.10	0.30±0.10	0.40±0.10	0.90±0.15

NOTE：Dimensions in mm.

Termination

Top View

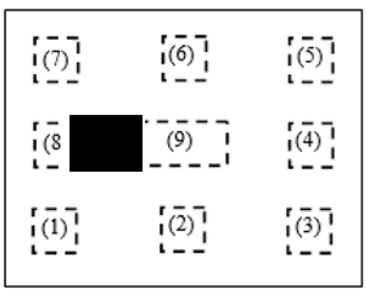

Terminal name	Dimension
1	Common
2	GND
3	High band
4	GND
5	Middle band
6	GND
7	Low band
8	GND
9	GND

Reference design of EVB

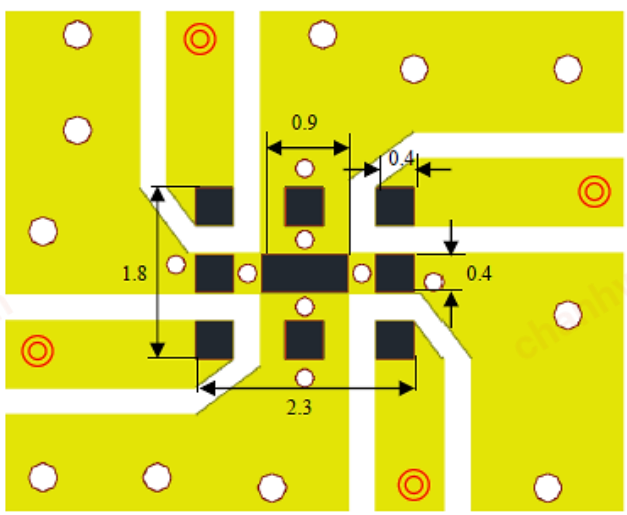

Unit：mm

Line width should be designed to match 50Ω characteristic impedance, depending on PCB material and thickness.

In the effort to improve our products, we reserve the right to make changes judged to be necessary.
CONFIDENTIAL AND PROPRIETARY INFORMATION
This document contains confidential and proprietary information of Pulse Electronics, Inc. (Pulse) and is protected by copyright, trade secret and other state and federal laws. Its receipt or possession does not convey any rights to reproduce, disclose its contents, or to manufacture, use or sell anything it may describe. Reproduction, disclosure or use without specific written authorization of Pulse is strictly forbidden.

RoHS COMPLIANT

chanhvinh.com

Pulse
A YAGEO Company

TECHNICAL DATA SHEET

Description: 2520 Triplexer

PART NUMBER: TPX2520LKTDRWH34L

MEASURING DIAGRAM

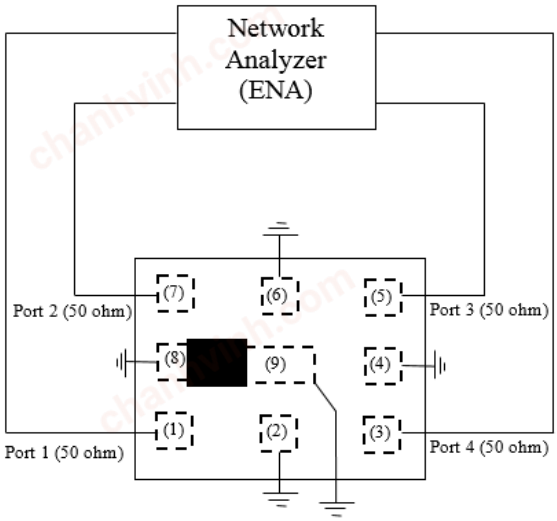

Test Instrument：
Agilent E5071C Network Analyzer.

ELECTRICAL PERFORMANCES

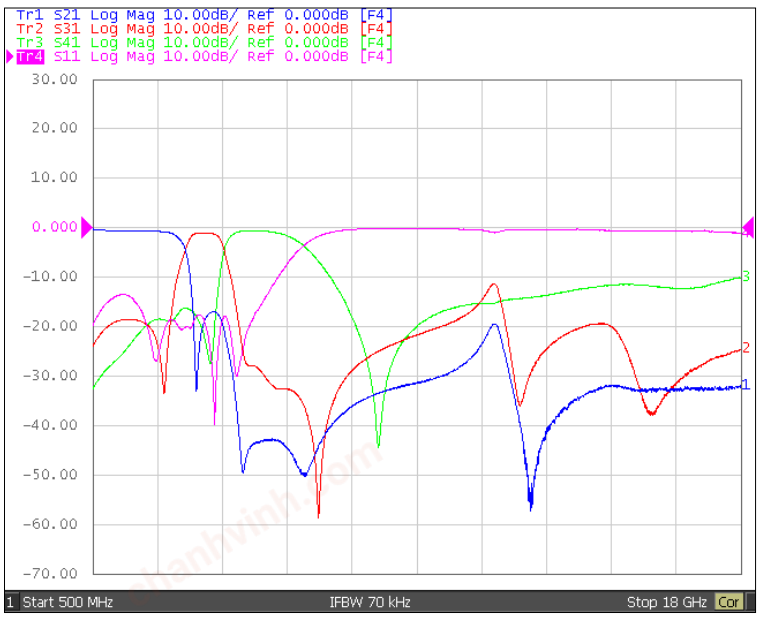

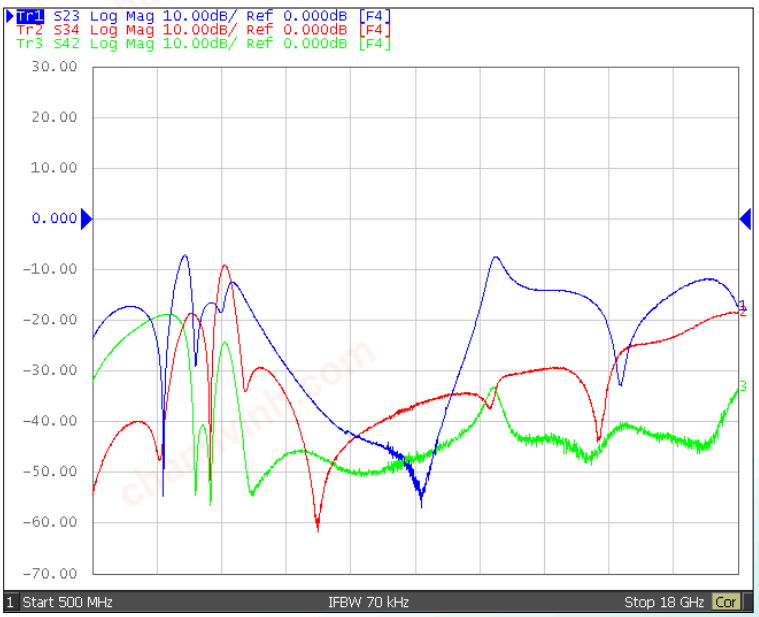

In the effort to improve our products, we reserve the right to make changes judged to be necessary.
CONFIDENTIAL AND PROPRIETARY INFORMATION
This document contains confidential and proprietary information of Pulse Electronics, Inc. (Pulse) and is protected by copyright, trade secret and other state and federal laws. Its receipt or possession does not convey any rights to reproduce, disclose its contents, or to manufacture, use or sell anything it may describe. Reproduction, disclosure or use without specific written authorization of Pulse is strictly forbidden.

RoHS COMPLIANT

chanhvinh.com

Pulse A YAGEO Company

TECHNICAL DATA SHEET

Description: 2520 Triplexer

PART NUMBER: TPX2520LKTDRWH34L

PACKING SPECIFICATION

Peel-off force

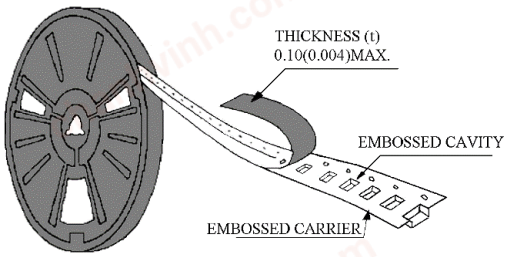

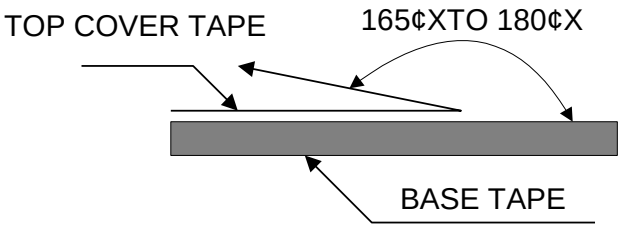

The force for peeling of cover tape is 10 grams in the arrow direction.

Dimension (Unit: mm)

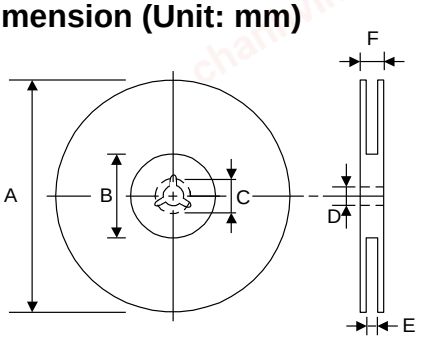

TYPE	A	B	C	D	E	F
8 mm	178±1	60+0.5 -0	-	13±0.2	9±0.5	12±0.5
12 mm	178±0.3	60±0.2	19.3±0.1	13.5±0.1	13.6±0.1	-

Taping quantity

SERIES	5824 5724	5320 5220	4532	4516	3225	3216 2520	2012 1608	1005 0605
PCS/Reel	5000	3000	1000	2000	2500	3000	4000	10000

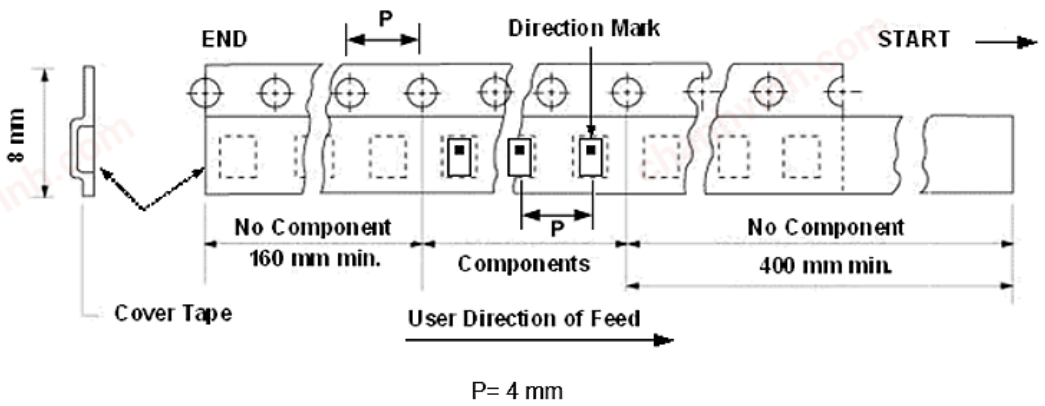

In the effort to improve our products, we reserve the right to make changes judged to be necessary.
CONFIDENTIAL AND PROPRIETARY INFORMATION
This document contains confidential and proprietary information of Pulse Electronics, Inc. (Pulse) and is protected by copyright, trade secret and other state and federal laws. Its receipt or possession does not convey any rights to reproduce, disclose its contents, or to manufacture, use or sell anything it may describe. Reproduction, disclosure or use without specific written authorization of Pulse is strictly forbidden.

RoHS COMPLIANT

chanhvinh.com

Pulse
A YAGEO Company

TECHNICAL DATA SHEET

Description: 2520 Triplexer

PART NUMBER: TPX2520LKTDRWH34L

REVISION HISTORY

Revision	Date	Description
Version 1	Apr. 13, 2022	- New issue

chanhvinh.com

In the effort to improve our products, we reserve the right to make changes judged to be necessary.
CONFIDENTIAL AND PROPRIETARY INFORMATION
This document contains confidential and proprietary information of Pulse Electronics, Inc. (Pulse) and is protected by copyright, trade secret and other state and federal laws. Its receipt or possession does not convey any rights to reproduce, disclose its contents, or to manufacture, use or sell anything it may describe. Reproduction, disclosure or use without specific written authorization of Pulse is strictly forbidden.

RoHS COMPLIANT